Engine Top End

Table of Contents

Exploded View 4-2
Specifications 4-4
Special Tools 4-6
Sealant 4-7

Exploded View

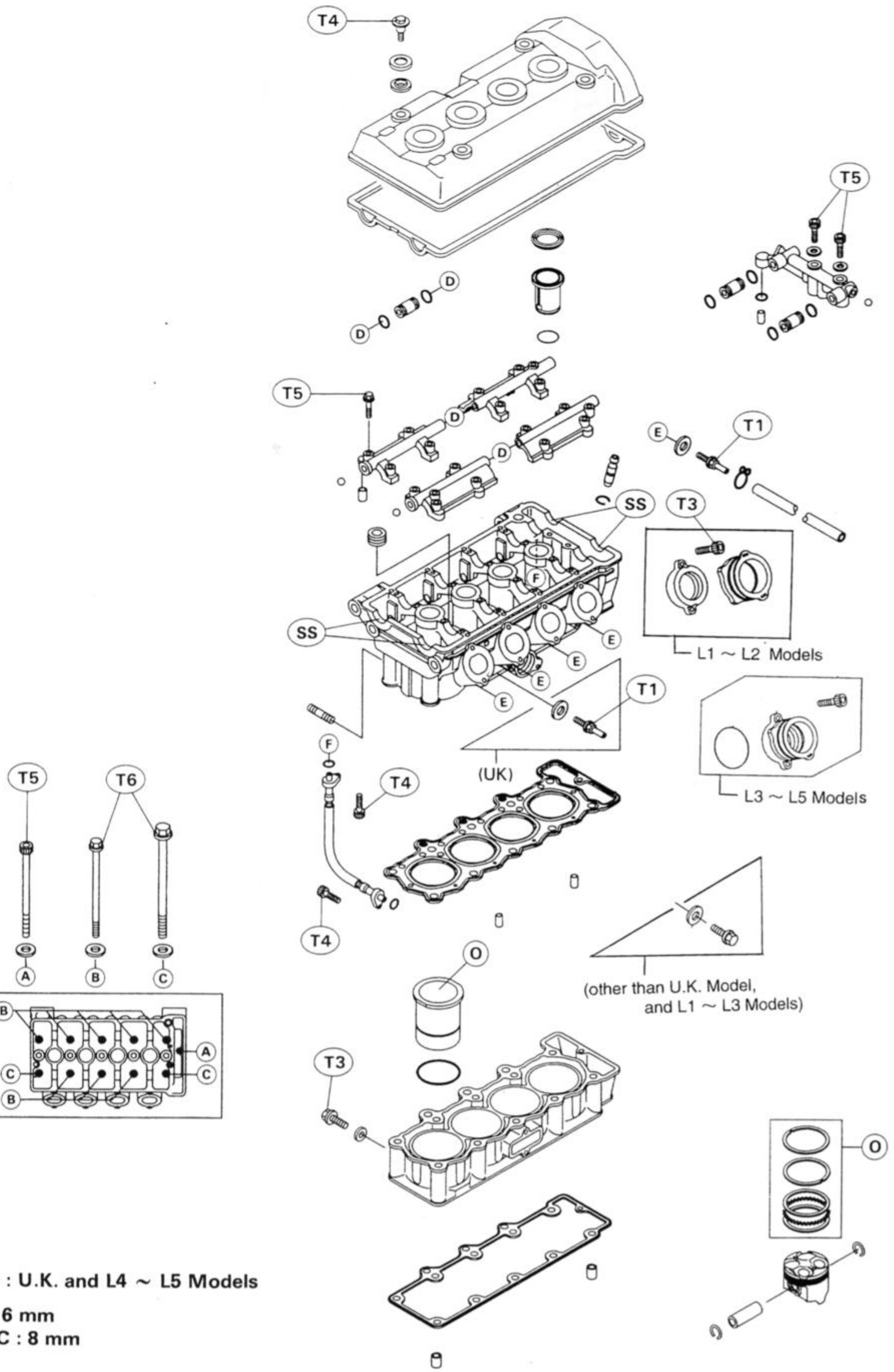

UK : U.K. and L4 ~ L5 Models

A : 6 mm
B, C : 8 mm

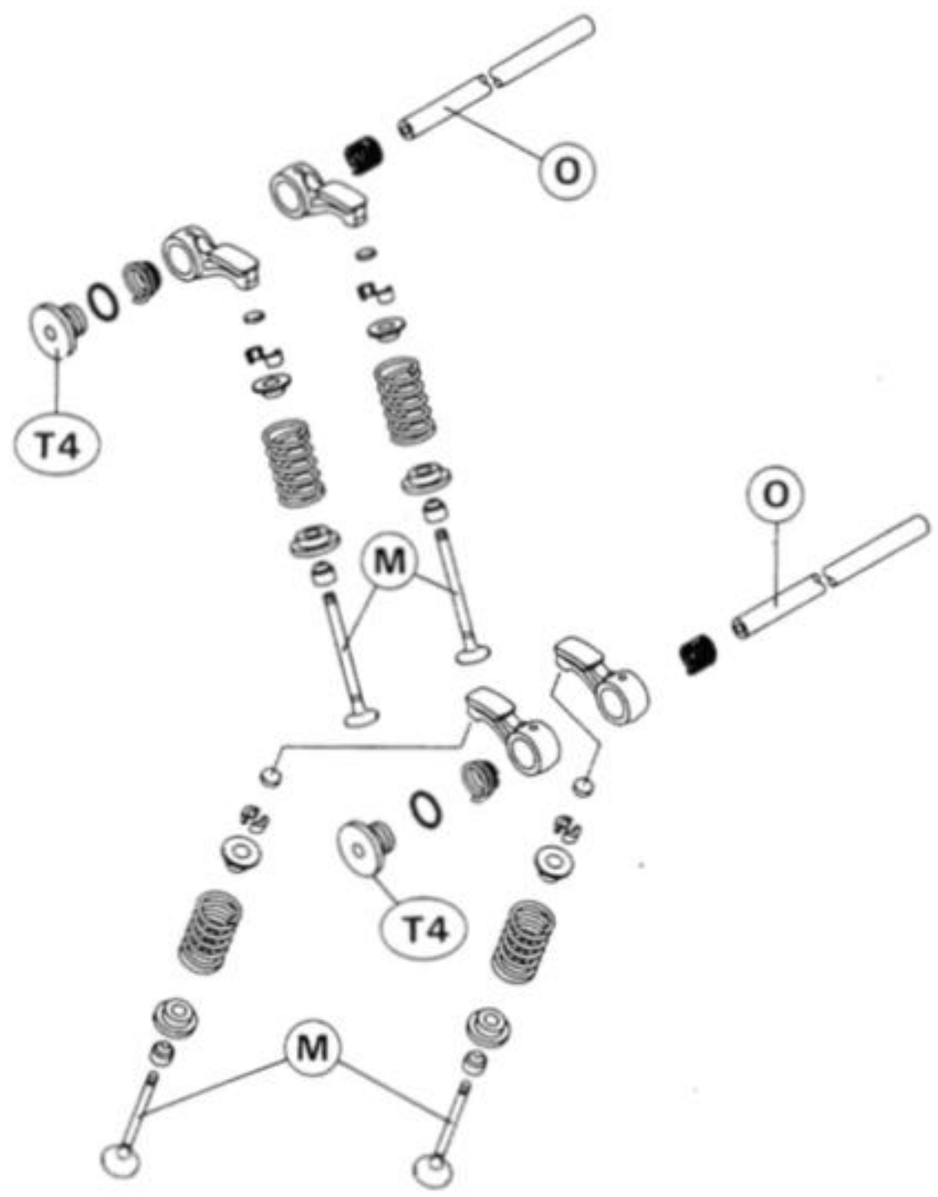

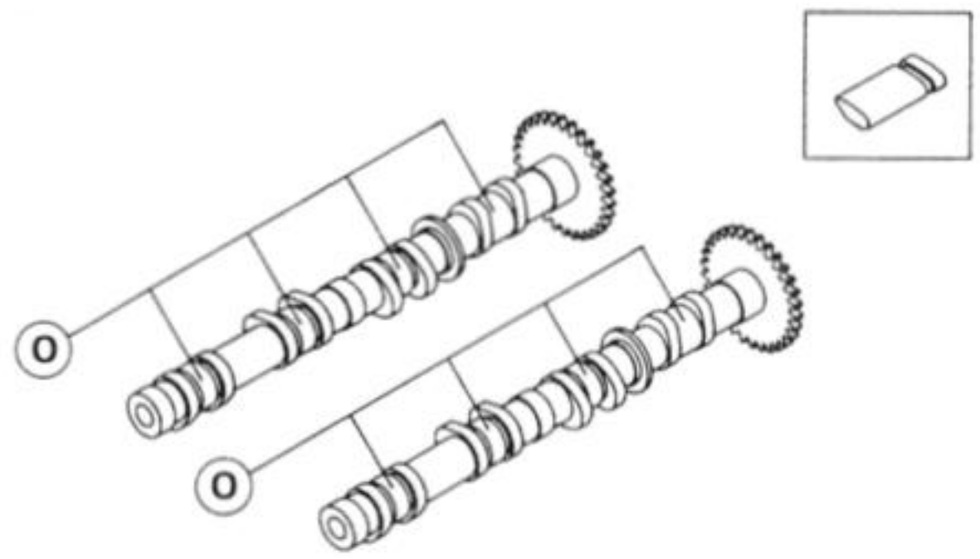

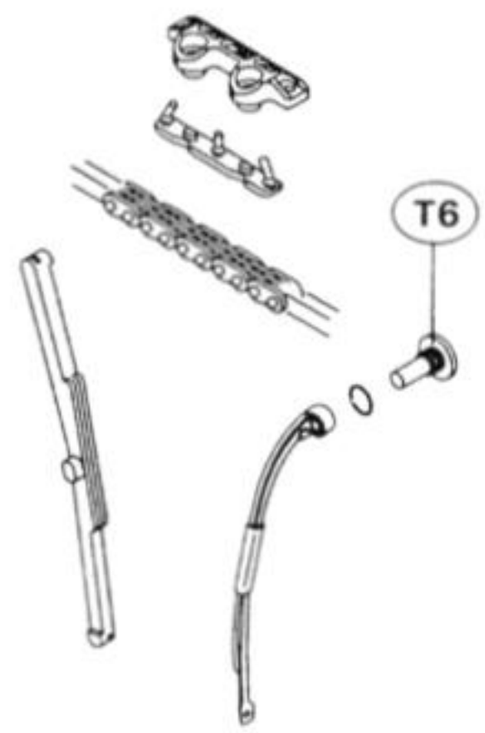

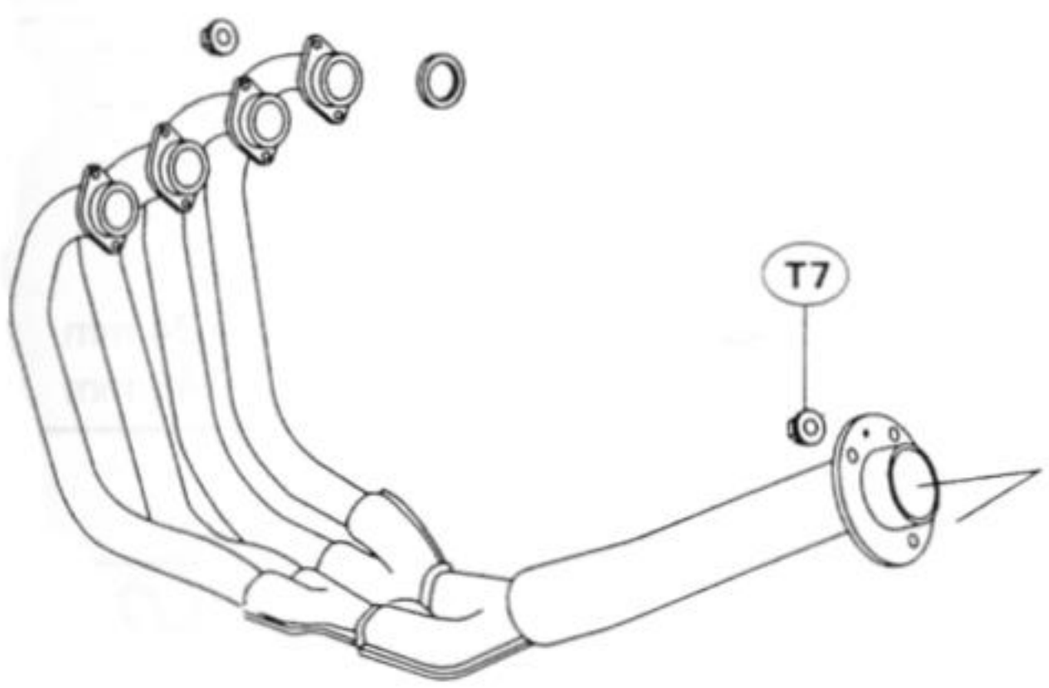

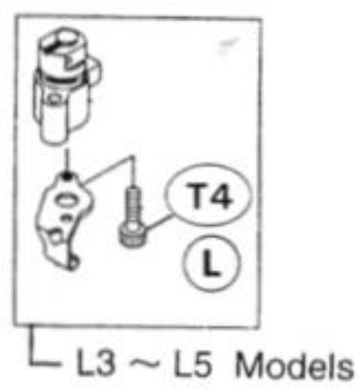

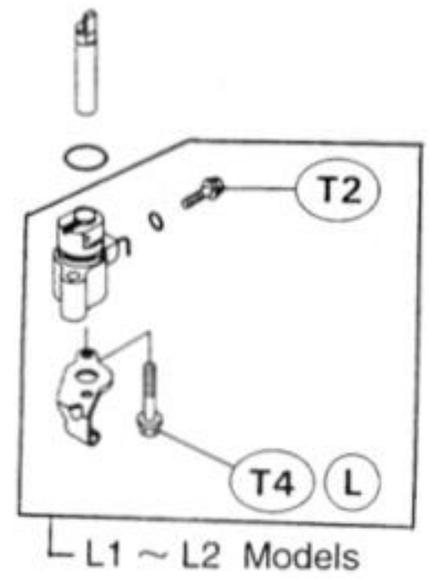

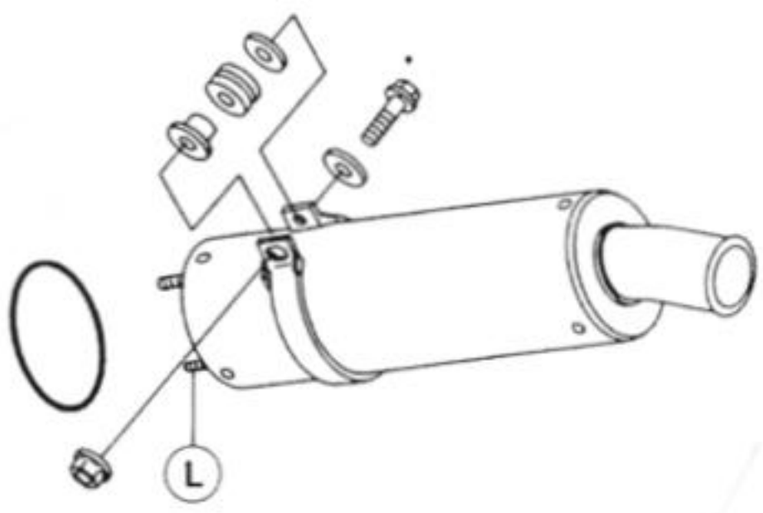

T1 : 4.9 N-m (0.5 kg-m, 43 in-lb)
T2 : 5.9 N-m (0.6 kg-m, 52 in-lb)
T3 : 8.8 N-m (0.9 kg-m, 78 in-lb)
T4 : 9.8 N-m (1.0 kg-m, 7.0 ft-lb)
T5 : 12 N-m (1.2 kg-m, 8.5 ft-lb)
T6 : 25 N-m (2.5 kg-m, 18 ft-lb)
T7 : 27 N-m (2.8 kg-m, 20 ft-lb)

L : Apply a non-permanent locking agent to the threads.
M : Apply molybdenum disulfide grease.
SS : Apply silicone sealant to the threads.
O : Apply oil.

Specifications

Item		Standard	Service Limit
Camshaft:			
Cam height:	Inlet	31.778 ~ 31.918 mm	31.68 mm
	Exhaust	31.469 ~ 31.609 mm	31.37 mm
Camshaft, camshaft cap clearance:			
	A	0.028 ~ 0.071 mm	0.16 mm
	B	0.078 ~ 0.121 mm	0.21 mm
Camshaft journal diameter:	A	23.950 ~ 23.972 mm	23.92 mm
	B	23.900 ~ 23.922 mm	23.87 mm
Camshaft bearing inside diameter		24.000 ~ 24.021 mm	24.08 mm
Camshaft runout		– – –	0.1 mm TIR
Camshaft chain 20-link length		127.0 ~ 127.4 mm	128.9 mm
Cylinder Head:			
Cylinder compression (Usable range)		686 ~ 1 079 kPa (7.0 ~ 11.0 kg/cm², 99 ~ 156 psi) @330 r/min (rpm)	
Cylinder head warp		– – –	0.05 mm
Valves:			
Valve clearance:	Inlet	0.12 ~ 0.17 mm	– – –
	Exhaust	0.16 ~ 0.21 mm	– – –
Valve spring free length		38.2 mm	36.4 mm
Valve head thickness:	Inlet	0.5 mm	0.25 mm
	Exhaust	0.7 mm	0.35 mm
Valve stem bend		0.02 mm TIR or under	0.05 mm TIR
Valve seat cutting angle		45°, 32°, 60°	– – –
Valve seating surface:			
Width:	Inlet	0.5 ~ 1.0 mm	– – –
	Exhaust	0.5 ~ 1.0 mm	– – –
Outside diameter:	Inlet	21.5 ~ 21.7 mm	– – –
	Exhaust	18.5 ~ 18.7 mm	– – –
Valve/valve guide clearance (wobble method):	Inlet	0.031 ~ 0.140 mm	0.34 mm
	Exhaust	0.085 ~ 0.180 mm	0.41 mm

Camshaft Height Measurement

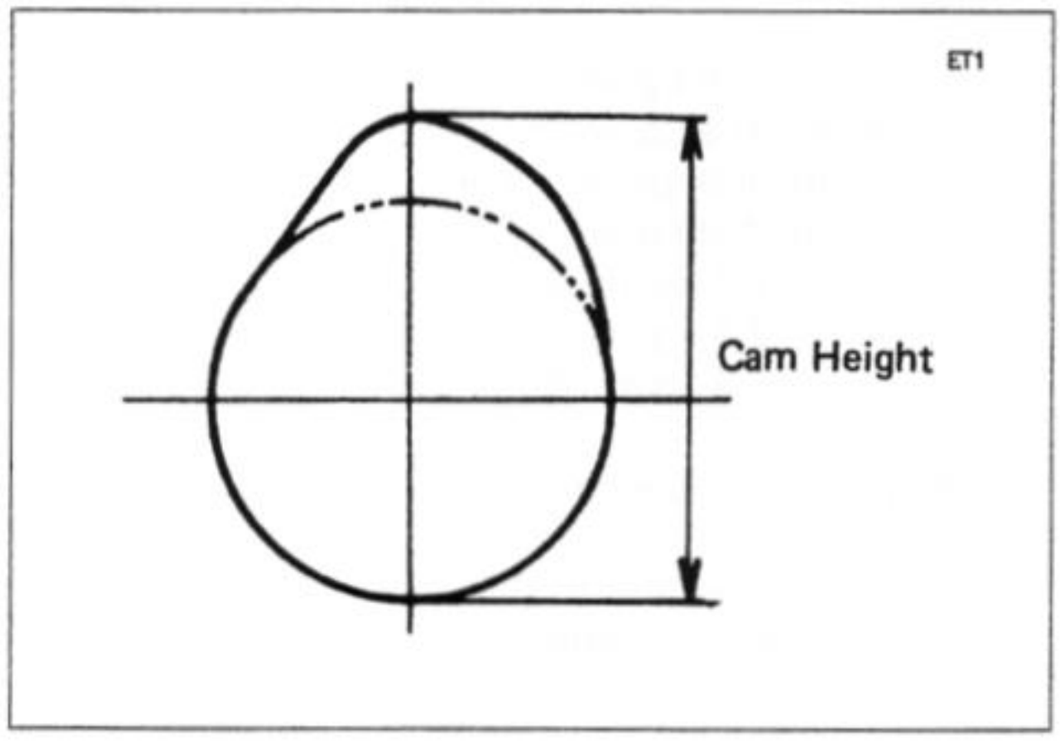

Camshaft Journal Diameter

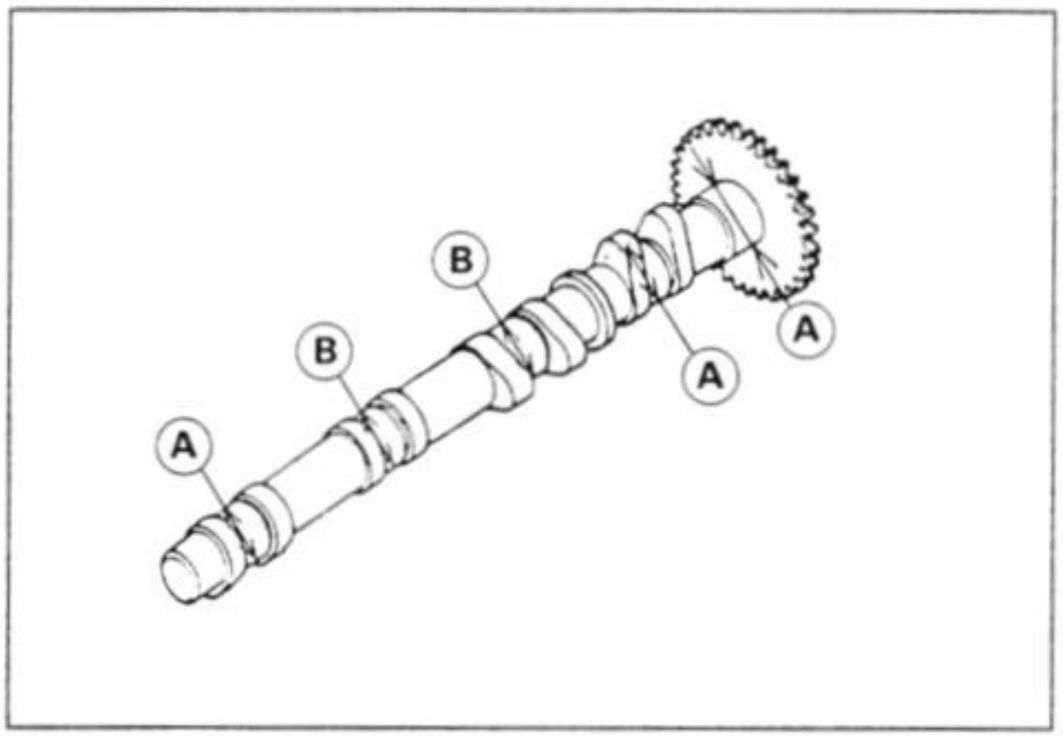

Item		Standard	Service Limit
Valve stem diameter:	Inlet	3.975 ~ 3.990 mm	3.96 mm
	Exhaust	3.955 ~ 3.970 mm	3.94 mm
Valve guide inside diameter		4.000 ~ 4.012 mm	4.08 mm
Cylinder, Piston:			
Cylinder inside diameter		57.000 ~ 57.012 mm	57.10 mm
Piston diameter		56.942 ~ 56.957 mm	56.79 mm
Piston/cylinder clearance		0.043 ~ 0.070 mm	– – –
Oversize piston and rings		+ 0.5 mm	– – –
Piston ring/groove clearance		0.030 ~ 0.070 mm	0.17 mm
Piston ring end gap:	Top	0.15 ~ 0.30 mm	0.6 mm
	Second	0.35 ~ 0.50 mm	0.8 mm

Valve Head

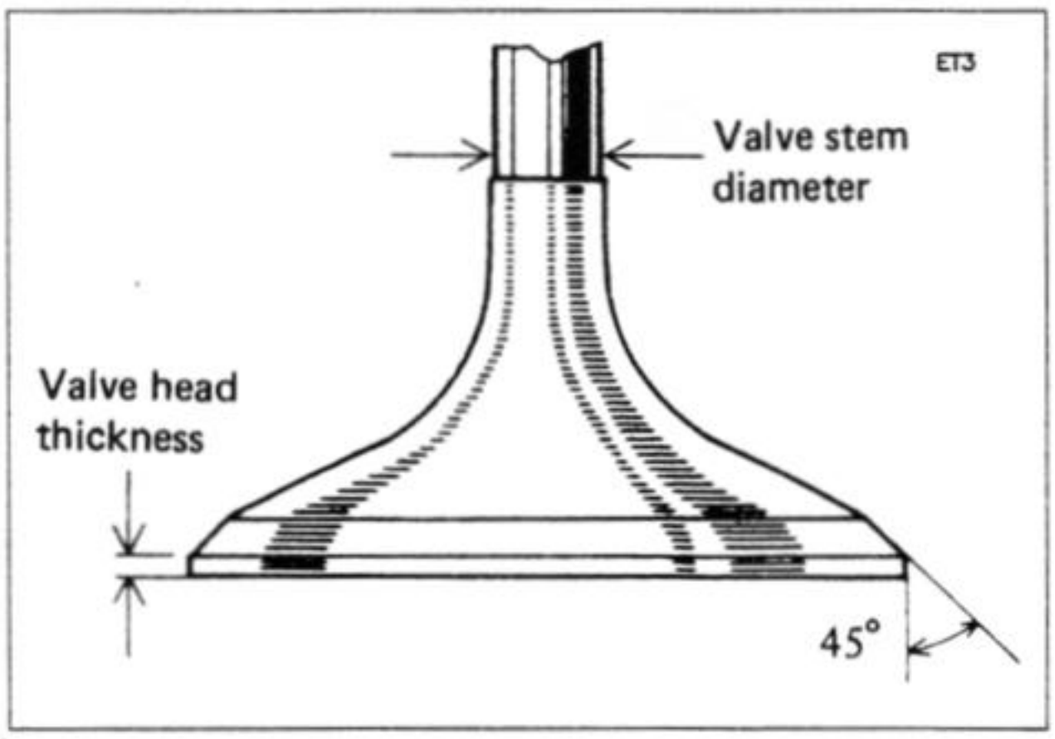

Valve Stem Bend

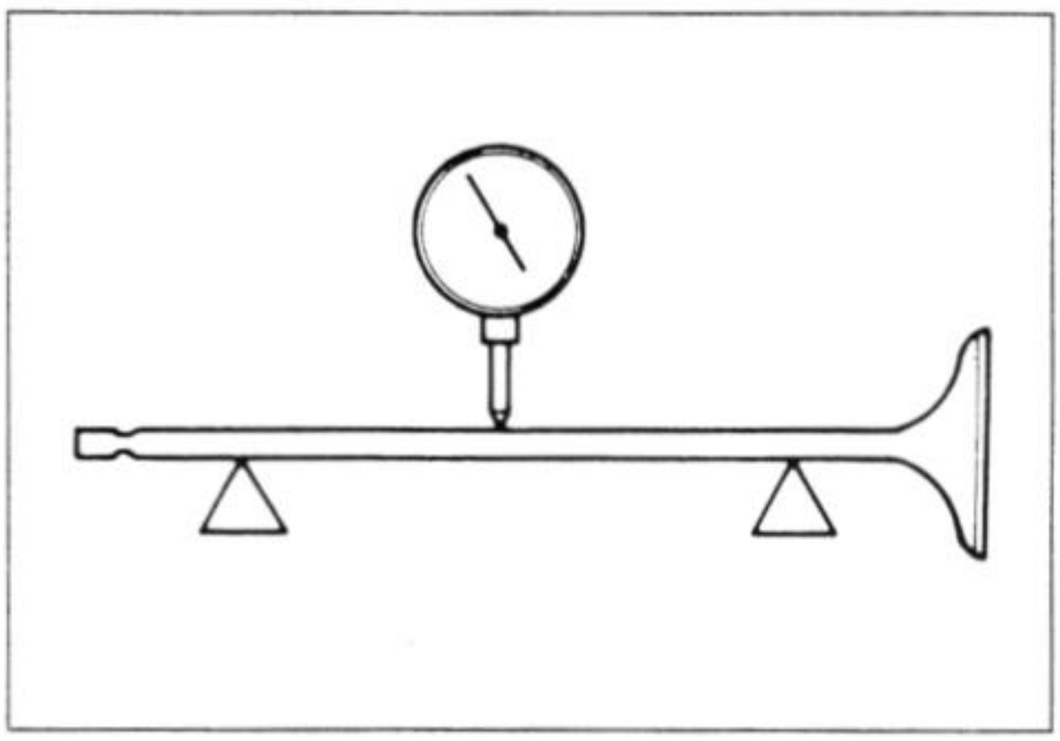

Camshaft Runout

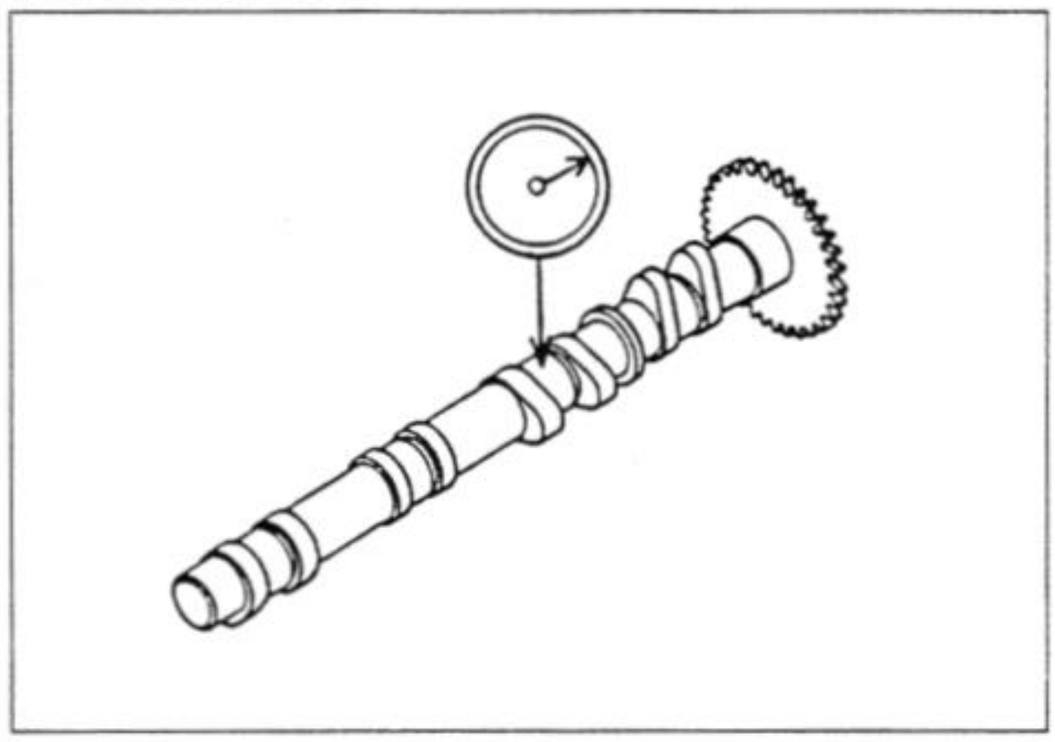

Special Tools

Compression Gauge: 57001-221

Compression Gauge Adapter, M10 X 1.0: 57001-1317

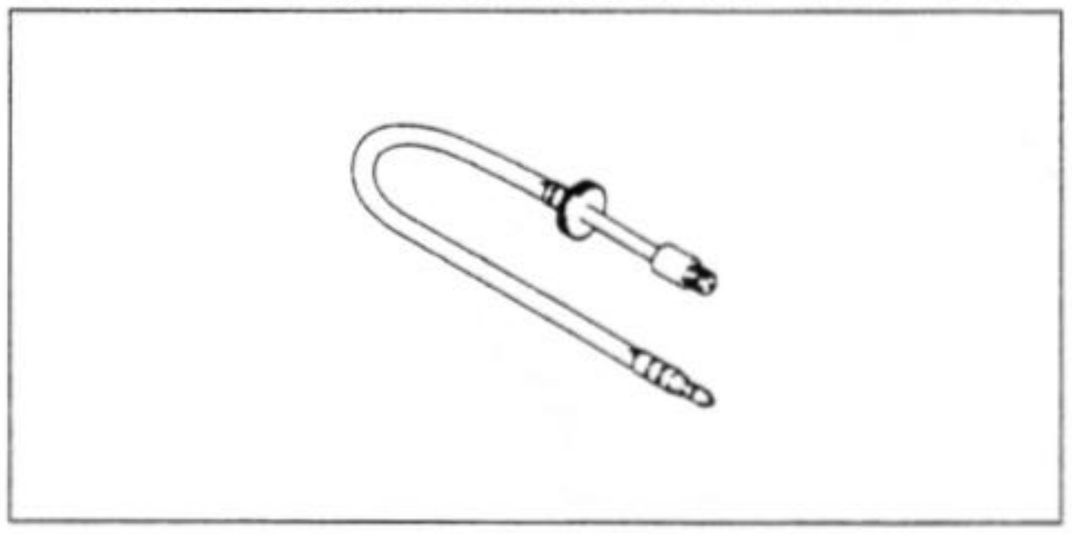

Rocker Arm Holder: 57001-1270

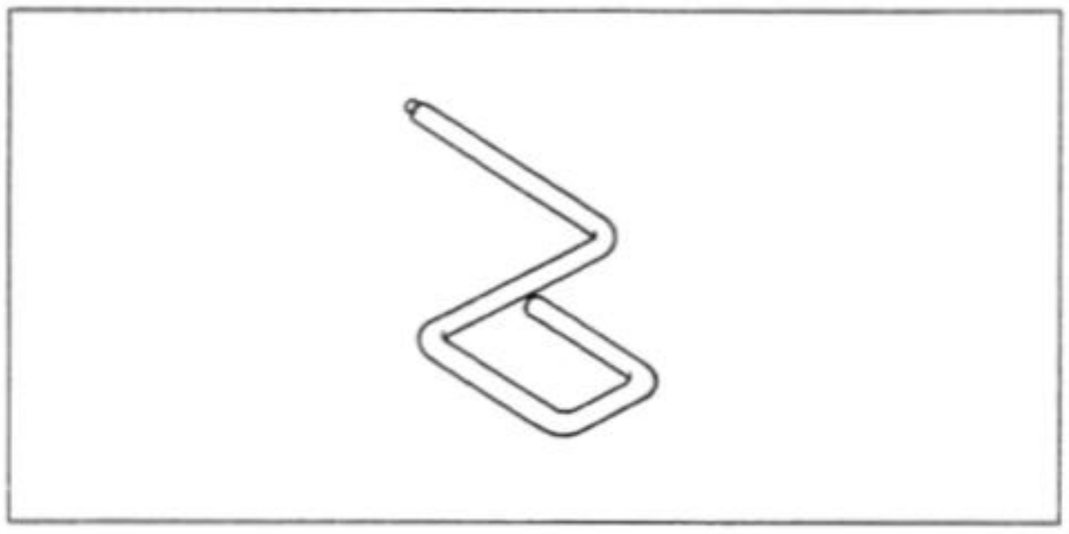

Valve Spring Compressor Assembly: 57001-241

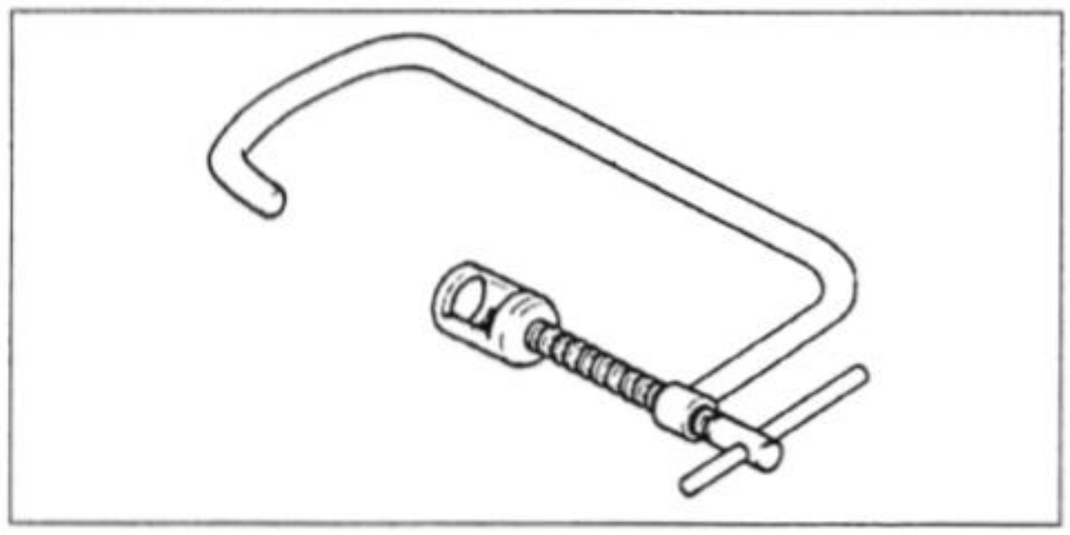

Valve Spring Compressor Adapter, Φ21: 57001-1272

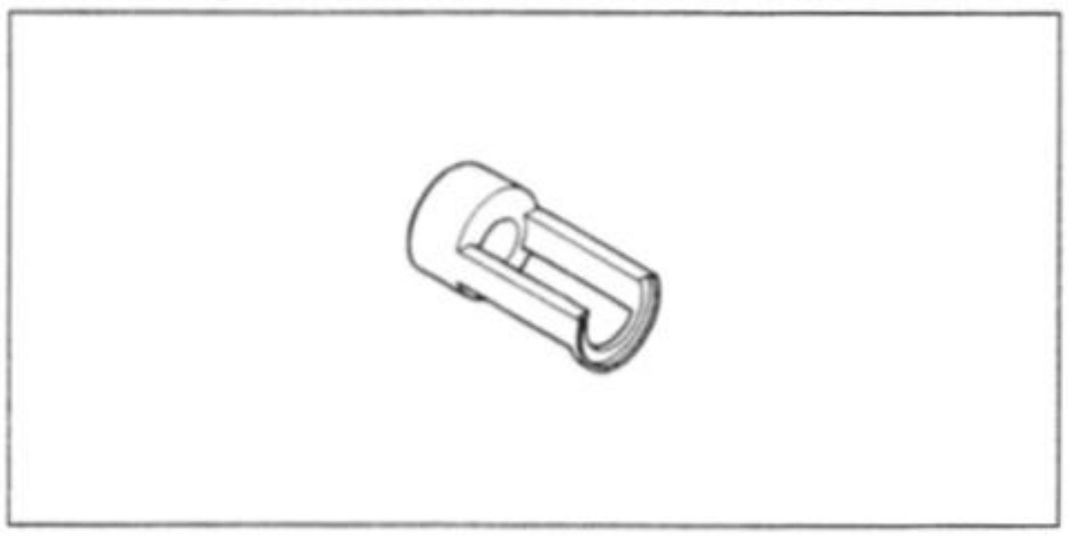

Valve Spring Compressor Joint: 57001-1271

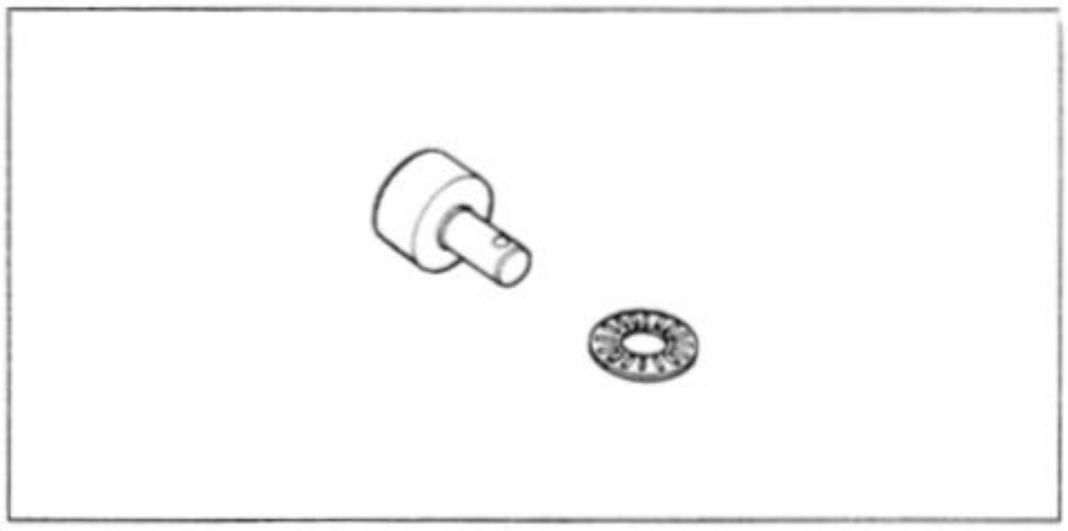

Valve Guide Arbor, Φ4: 57001-1273

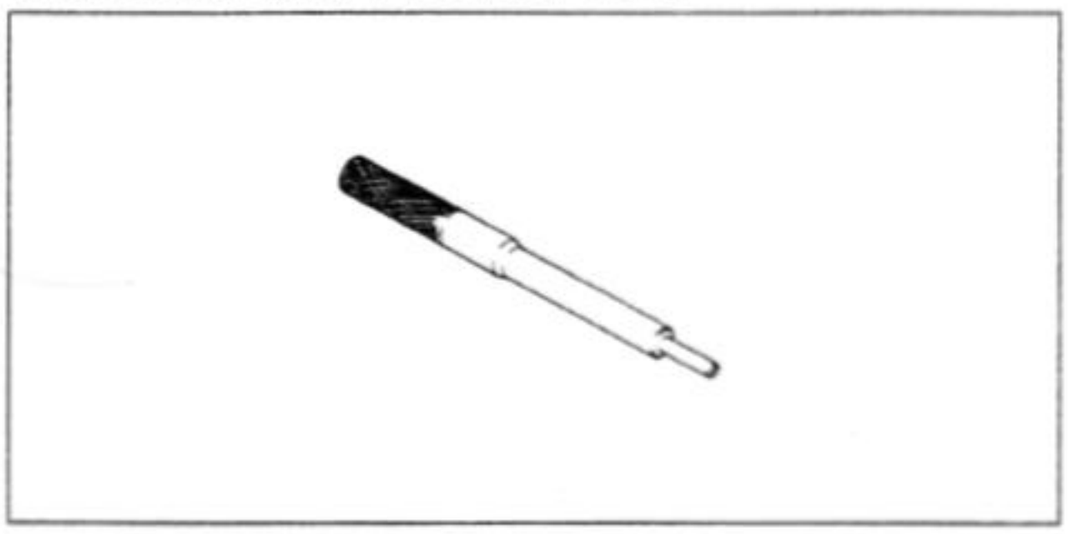

Valve Guide Reamer, Φ4: 57001-1274

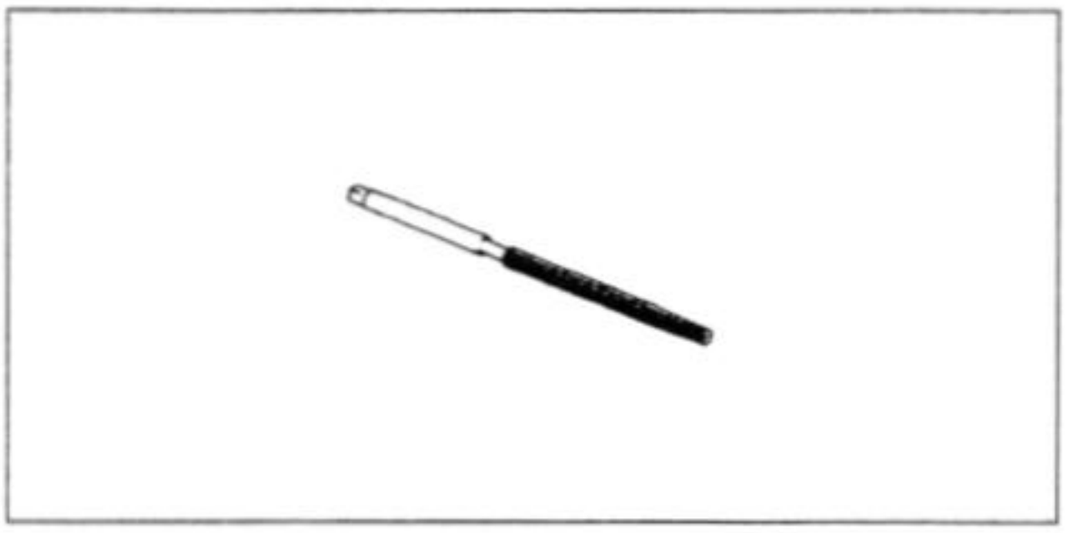

Valve Seat Cutter Holder, Φ4: 57001-1275

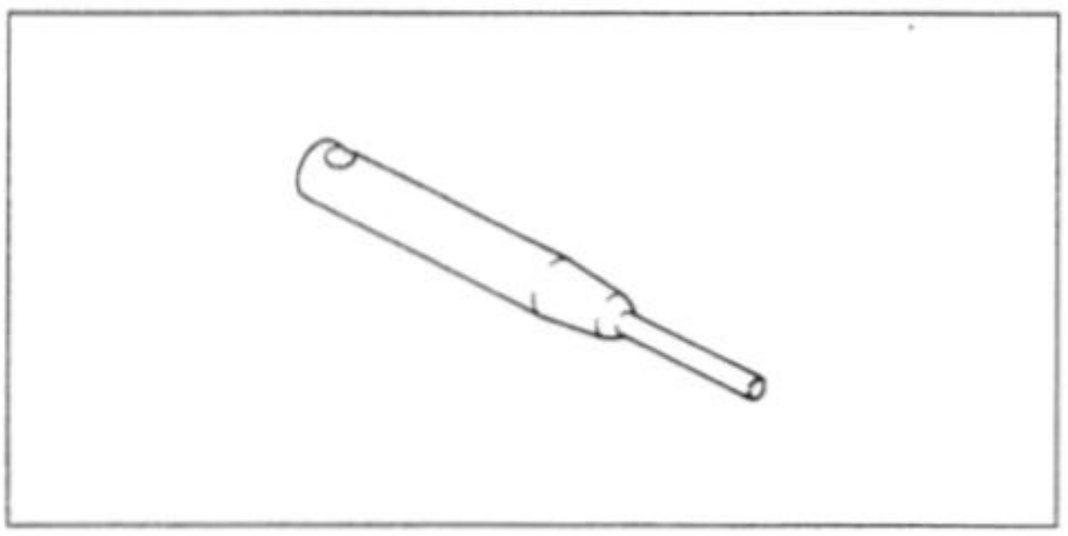

Valve Seat Cutter, 45° – Φ20.5: 57001-1307

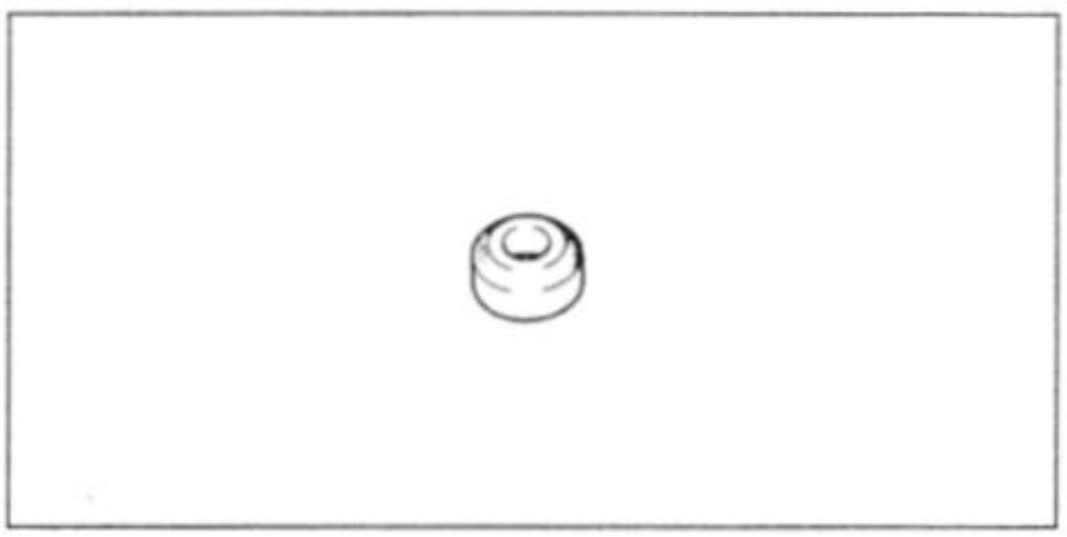

Valve Seat Cutter, 30° – Φ18: 57001-1308

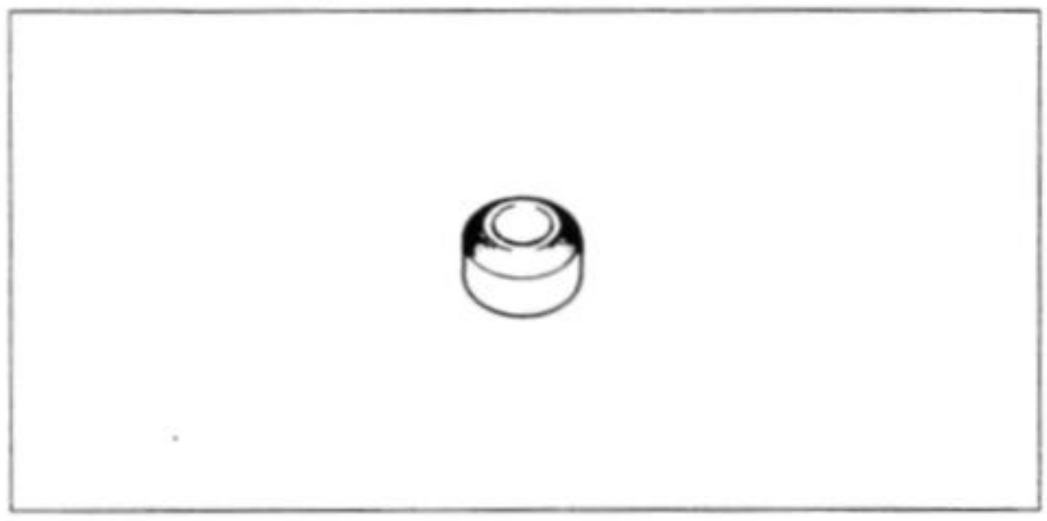

Valve Seat Cutter Holder Bar: 57001-1128

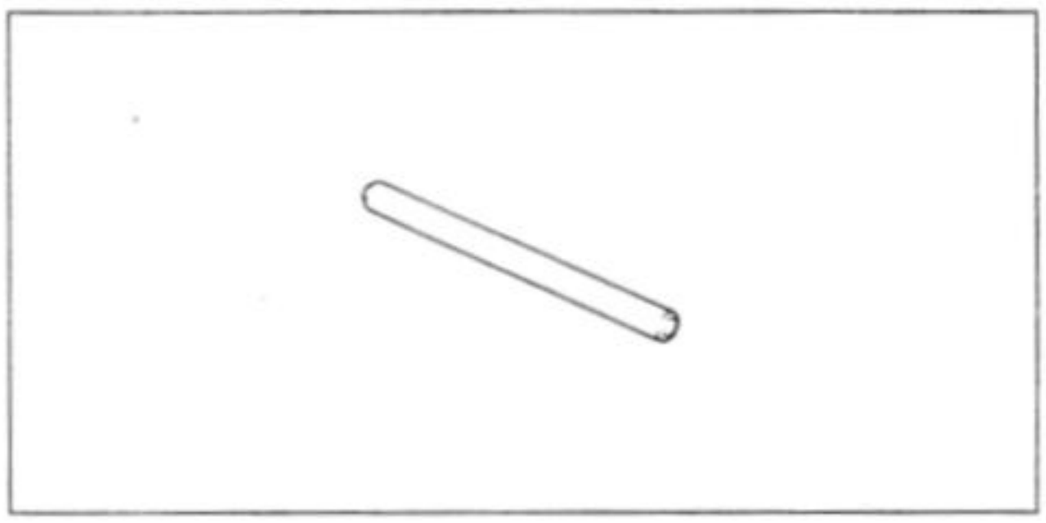

Valve Seat Cutter, 60° – Φ25: 57001-1328

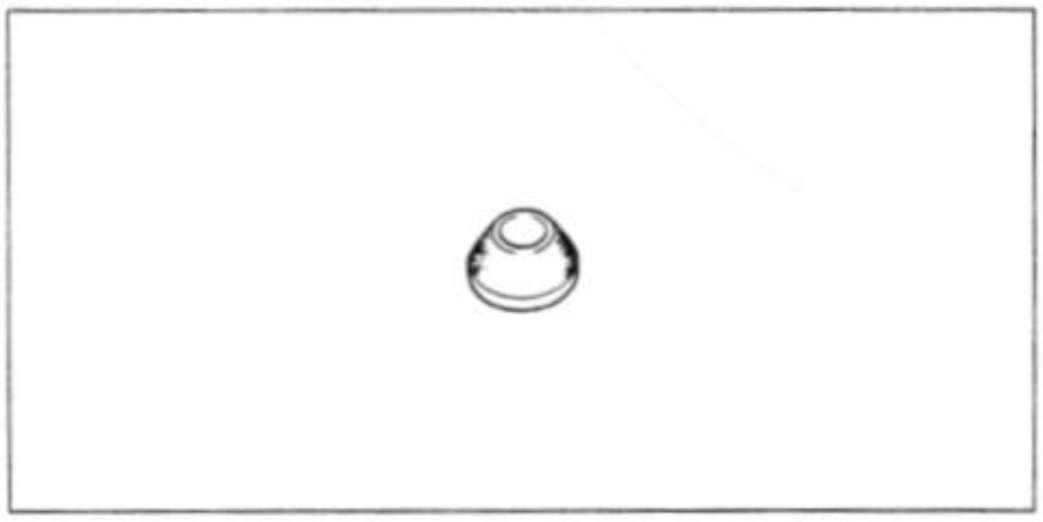

Valve Seat Cutter, 45° – Φ22: 57001-1205

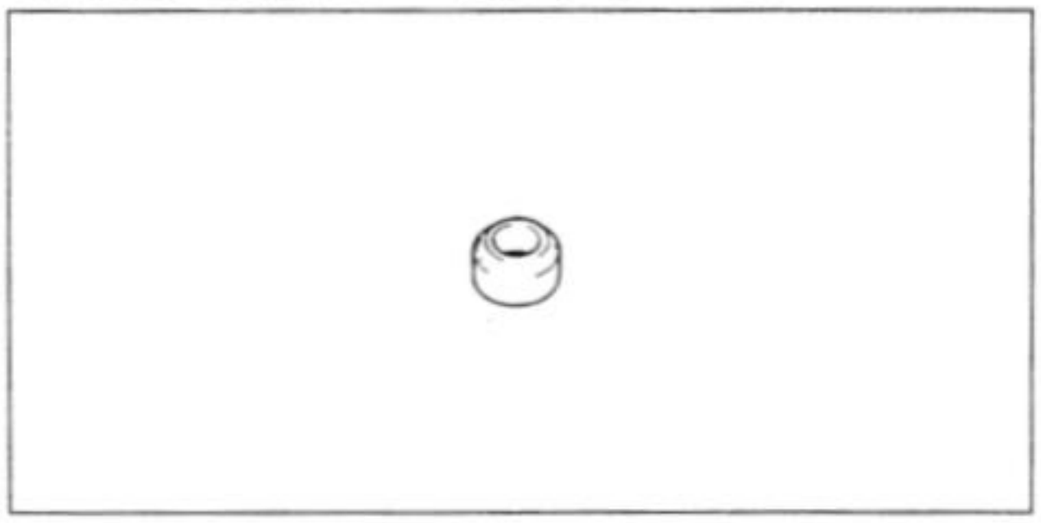

Valve Seat Cutter, 32° – Φ22: 57001-1206

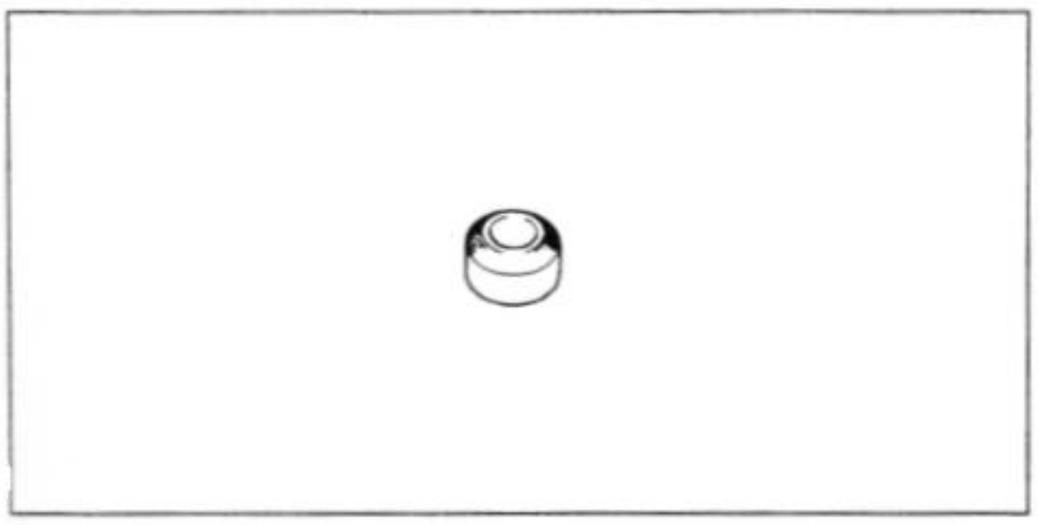

Valve Seat Cutter, 65° – Φ19: 57001-1310

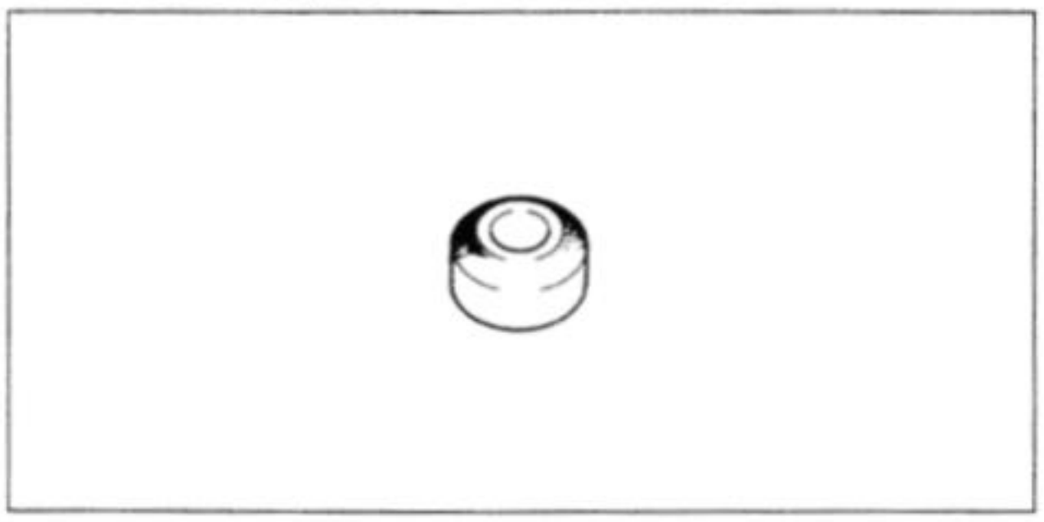

Piston Base, Φ8: 57001-147

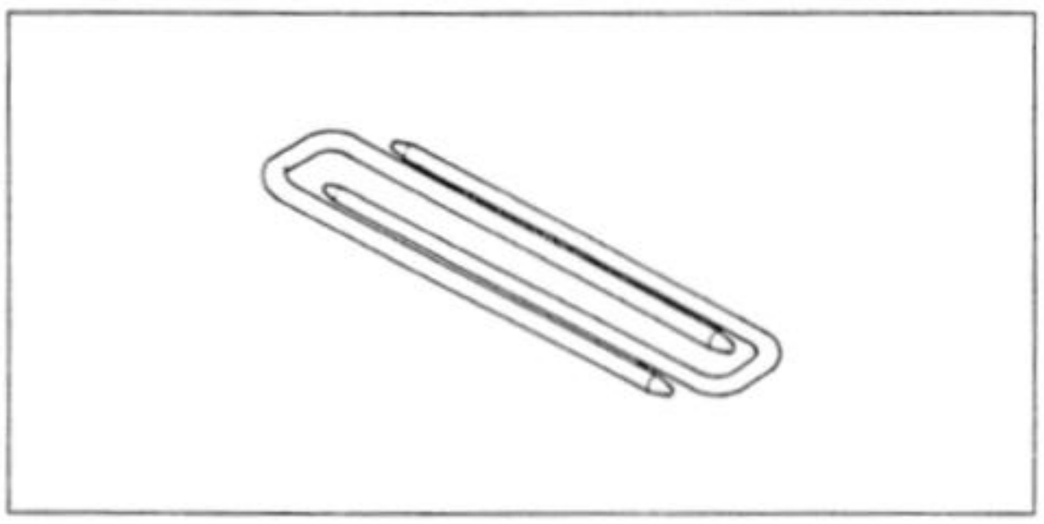

Piston Pin Puller Assembly: 57001-910

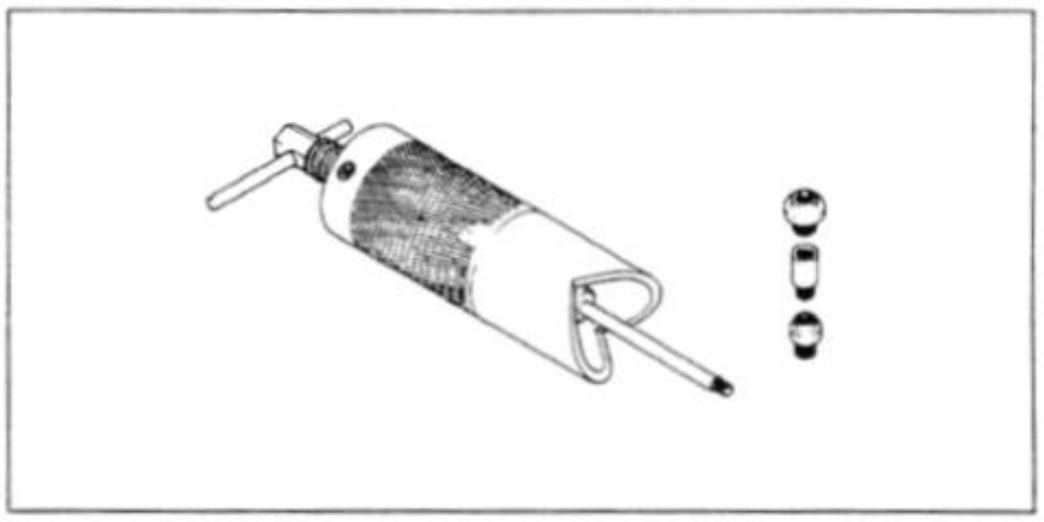

Sealant
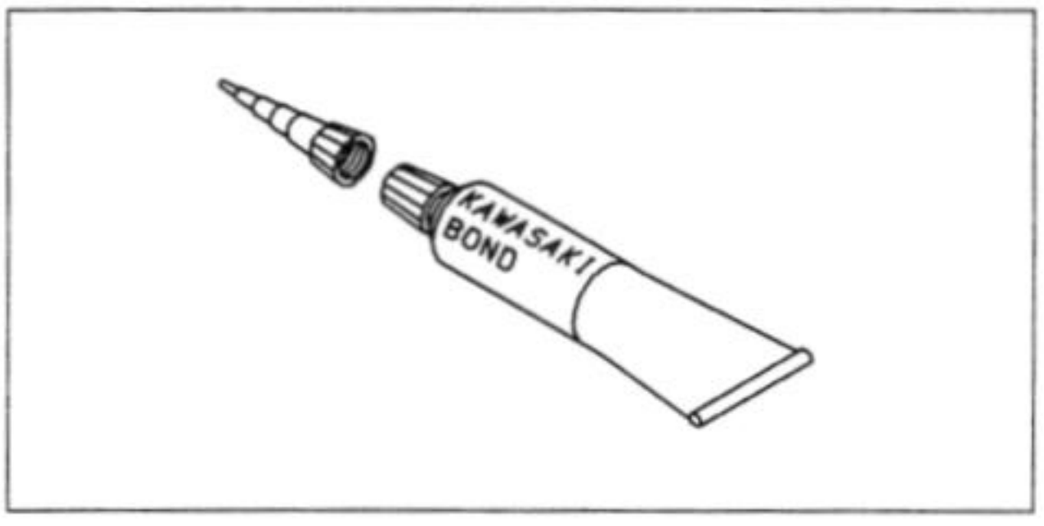
Kawasaki Bond (Silicone Sealant): 56019-120