SYMBOLS

The symbols used throughout this manual show specific service procedures. If supplementary information is required pertaining to these symbols, it would be explained specifically in the text without the use of the symbols.

NEW	Replace the part(s) with new one(s) before assembly.
OIL	Use recommended engine oil, unless otherwise specified.
MO OIL	Use molybdenum oil solution (mixture of the engine oil and molybdenum grease in a ratio of 1:1).
GREASE	Use multi-purpose grease (lithium based multi-purpose grease NLGI # 2 or equivalent).
M	Use molybdenum disulfide grease (containing more than 3 % molybdenum disulfide, NLGI # 2 or equivalent). Example: Molykote® BR-2 plus manufactured by Dow Corning, U. S. A. Multi-purpose M-2 manufactured by Mitsubishi Oil, Japan
MP	Use molybdenum disulfide paste (containing more than 40 % molybdenum disulfide, NLGI # 2 or equivalent). Example: Molykote® G-n paste, manufactured by Dow Corning, U. S. A. Honda Moly 60 (U. S. A. only) Rocol ASP manufactured by Rocol Limited, U. K. Rocol Paste manufactured by Sumico Lubricant, Japan
S	Use silicone grease.
LOCK	Apply a locking agent. Use a medium strength locking agent unless otherwise specified.
SEAL	Apply sealant.
BRAKE FLUID	Use DOT 4 brake fluid. Use the recommended brake fluid unless otherwise specified.
FORK	Use fork or suspension fluid.

1. GENERAL INFORMATION

SERVICE RULES

1. Use genuine Honda or Honda-recommended parts and lubricants or their equivalents. Parts that don't meet Honda's design specifications may cause damage to the motorcycle.
2. Use the special tools designed for this product to avoid damage and incorrect assembly.
3. Use only metric tools when servicing the motorcycle. Metric bolts, nuts and screws are not interchangeable with English fasteners.
4. Install new gaskets, O-rings, cotter pins, and lock plates when reassembling.
5. When tightening bolts or nuts, begin with the larger diameter or inner bolt first. Then tighten to the specified torque diagonally in incremental steps unless a particular sequence is specified.
6. Clean parts in cleaning solvent upon disassembly. Lubricate any sliding surfaces before reassembly.
7. After reassembly, check all parts for proper installation and operation.
8. Route all electrical wires as shown on pages 1-18 through 1-40, Cable & Harness Routing.

MODEL IDENTIFICATION

'00–'01:

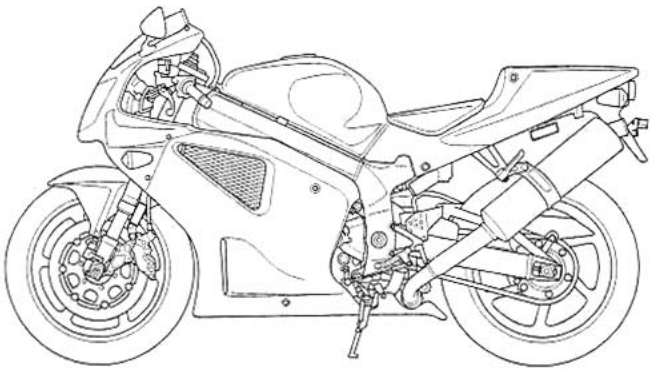

After '01:

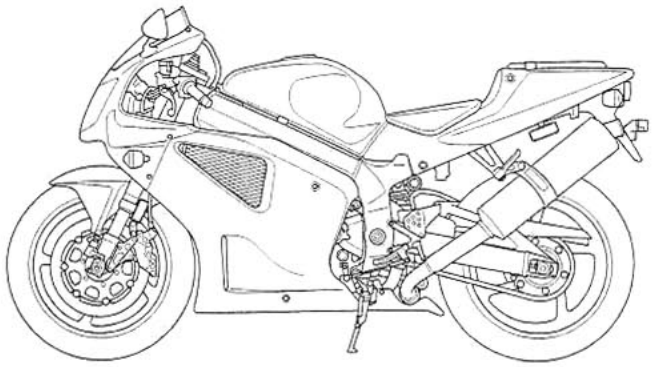

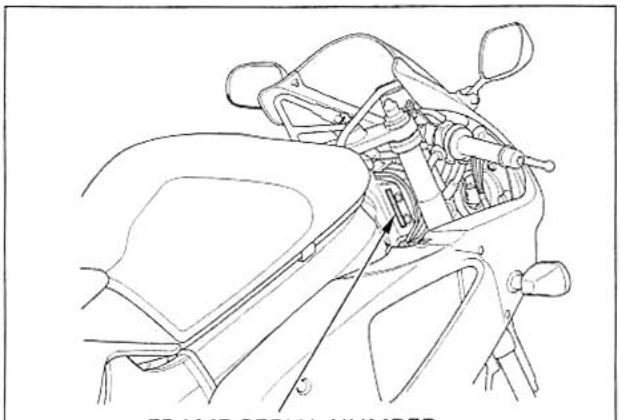

The frame serial number is stamped on the right side of the steering head.

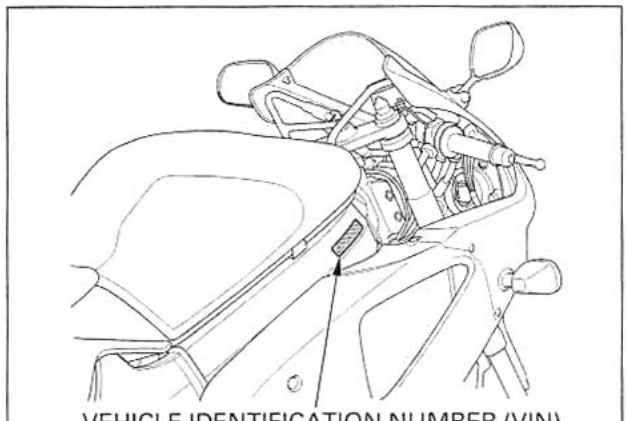

The Vehicle Identification Number (VIN) is located on the right side of the frame near the steering head.

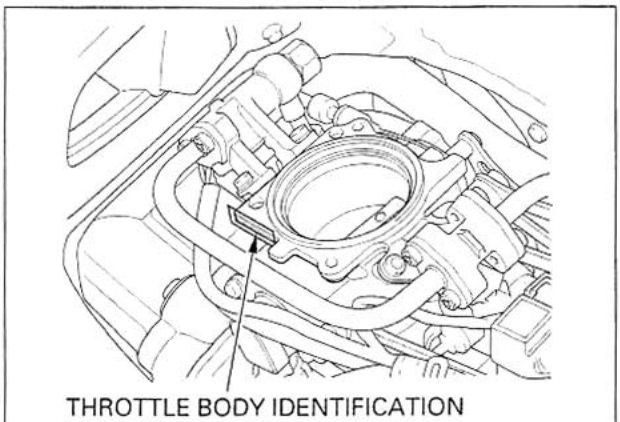

The throttle body identification number is stamped on the left front side of the throttle body.

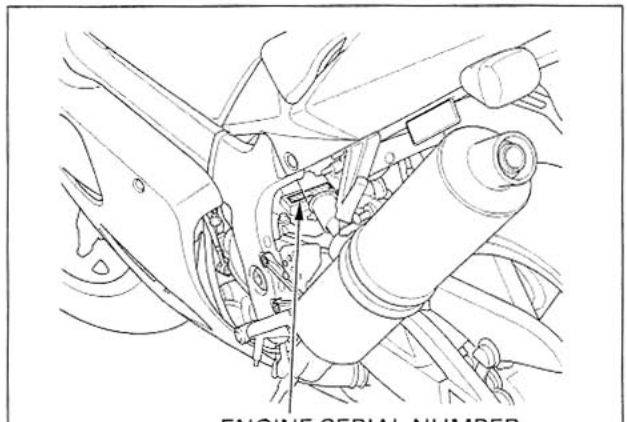

The engine serial number is stamped on the rear of the upper crankcase.

'00 – '01:

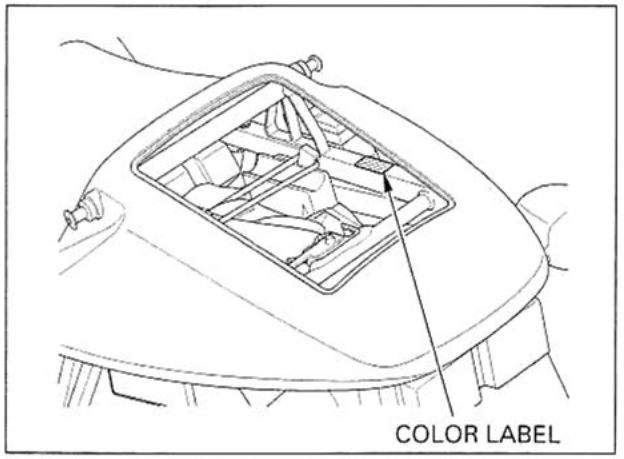

The color label is attached on the seat rail under the seat. When ordering color-coded parts, always specify the designated color code.

After '01:

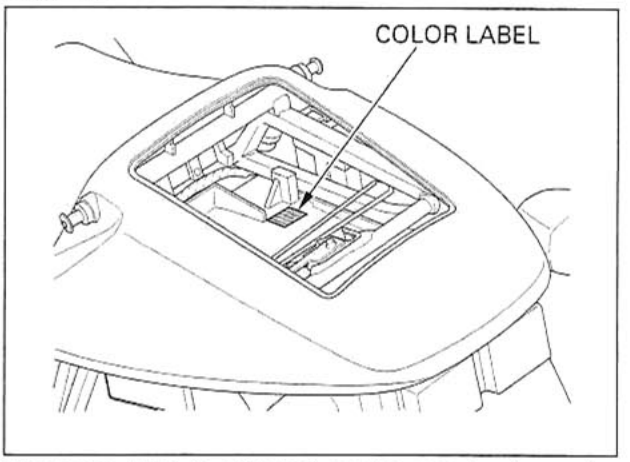

The color label is attached on the rear fender under the passenger seat. When ordering color-coded parts, always specify the designated color code.

SPECIFICATIONS

GENERAL

ITEM			SPECIFICATIONS
DIMENSIONS	Overall length		2,060 mm (81.1 in)
	Overall width		725 mm (28.5 in)
	Overall height	('00 – '01)	1,120 mm (44.1 in)
		(After '01)	1,145 mm (45.1 in)
	Wheelbase	('00 – '01)	1,410 mm (55.5 in)
		(After '01)	1,420 mm (55.9 in)
	Seat height	('00 – '01)	815 mm (32.1 in)
		(After '01)	825 mm (32.5 in)
	Footpeg height	('00 – '01)	384 mm (15.1 in)
		(After '01)	393 mm (15.5 in)
	Ground clearance	('00 – '01)	135 mm (5.3 in)
		(After '01)	130 mm (5.1 in)
	Dry weight		
	Except California type	('00 – '01)	200 kg (441 lbs)
		(After '01)	199 kg (439 lbs)
	California type	('00 – '01)	201 kg (443 lbs)
		(After '01)	200 kg (441 lbs)
	Curb weight		
	Except California type	('00 – '01)	223 kg (492 lbs)
		(After '01)	219 kg (483 lbs)
	California type	('00 – '01)	224 kg (494 lbs)
		(After '01)	220 kg (485 lbs)
	Maximum weight capacity		
	Except Canada type		166 kg (366 lbs)
	Canada type		170 kg (375 lbs)
FRAME	Frame type		Diamond
	Front suspension		Telescopic fork
	Front axle travel	('00 – '01)	118 mm (4.6 in)
		(After '01)	119 mm (4.7 in)
	Front fork stroke		130 mm (5.1 in)
	Rear suspension		Swingarm
	Rear axle travel	('00 – '01)	120 mm (4.7 in)
		(After '01)	126 mm (5.0 in)
	Front tire size	('00 – '01)	120/70 ZR 17 (58W)
		(After '01)	120/70 ZR 17 M/C (58W)
	Rear tire size	('00 – '01)	190/50 ZR 17 (73W)
		(After '01)	190/50 ZR 17 M/C (73W)
	Front tire brand	('00 – '01)	D207FR (DUNLOP), MEZ3H FRONT RACING (METZELER)
		(After '01)	D208FN (DUNLOP), MEZ3H FRONT RACING (METZELER)
	Rear tire brand	('00 – '01)	D207P (DUNLOP), MEZ3H RACING (METZELER)
		(After '01)	D208N (DUNLOP), MEZ3H RACING (METZELER)
	Front brake		Hydraulic double disc
	Rear brake		Hydraulic single disc
	Caster angle	('00 – '01)	24°30'
		(After '01)	23°30'
	Trail length	('00 – '01)	101 mm (4.0 in)
		(After '01)	95 mm (3.7 in)
	Fuel tank capacity		18.0 ℓ (4.76 US gal , 3.96 Imp gal)

GENERAL (Cont'd)

ITEM		SPECIFICATIONS
ENGINE	Cylinder arrangement	2 cylinders 90° V transverse
	Bore and stroke	100.0 × 63.6 mm (3.94 × 2.50 in)
	Displacement	999 cm³ (60.9 cu-in)
	Compression ratio	10.8 : 1
	Valve train	Gear driven, DOHC
	Intake valve opens	20° BTDC (At 1 mm lift)
	closes	50° ABDC (At 1 mm lift)
	Exhaust valve opens	50° BBDC (At 1 mm lift)
	closes	20° ATDC (At 1 mm lift)
	Lubrication system	Forced pressure and wet sump
	Oil pump type	Trochoid
	Cooling system	Liquid cooled
	Air filtration	Paper element
	Engine dry weight	70.5 kg (155.4 lbs)
	Firing order	Front—270°—Rear—450°—Front
CARBURETION	Type	Programmed Fuel Injection (PGM-FI)
	Throttle bore ('00—'01)	54 mm (2.1 in)
	(After '01)	62 mm (2.4 in)
DRIVE TRAIN	Clutch system	Multi-plate, wet
	Clutch operation system	Hydraulic operating
	Transmission	Constant mesh, 6-speeds
	Primary reduction	1.700 (68/40)
	Final reduction	2.500 (40/16)
	Gear ratio 1st	2.461 (32/13)
	2nd	1.812 (29/16)
	3rd	1.428 (30/21)
	4th	1.240 (31/25)
	5th	1.080 (27/25)
	6th	0.962 (25/26)
	Gearshift pattern	Left foot operated return system, 1—N—2—3—4—5—6
ELECTRICAL	Ignition system	Computer-controlled digital transitorized
	Starting system	Electric starter motor
	Charging system	Triple phase output alternator
	Regulator/rectifier	SCR shorted, triple phase full wave rectification
	Lighting system	Battery

LUBRICATION

Unit: mm (in)

ITEM		STANDARD	SERVICE LIMIT
Engine oil capacity	After draining	3.5 ℓ (3.7 US qt , 3.1 Imp qt)	———
	After draining/filter change	3.9 ℓ (4.1 US qt , 3.4 Imp qt)	———
	After disassembly	4.3 ℓ (4.5 US qt , 3.8 Imp qt)	———
Recommended engine oil		Honda GN4 4-stroke oil or equivalent motor oil API service classification SF or SG Viscosity: SAE 10W-40	———
Oil pressure (at oil filter)		431 kPa (4.4 kgf/cm², 63 psi) at 5,000 rpm/80°C (176°F)	———
Oil pump	Tip clearance	0.15 (0.006)	0.20 (0.008)
	Body clearance	0.15 – 0.21 (0.006 – 0.008)	0.35 (0.014)
	Side clearance	0.02 – 0.09 (0.001 – 0.004)	0.12 (0.005)

FUEL SYSTEM (Programmed Fuel Injection)

ITEM		SPECIFICATIONS
Throttle body identification number	'00 – '01	Except California type: GQ51B, California type: GQ51C
	After '01	Except California type: GQ76B, California type: GQ76C
Base starter valve for synchronization		Rear
Idle speed		1,300 ± 100 rpm
Throttle grip free play		2 – 6 (1/16 – 1/4)
Intake air temperature sensor resistance (at 20°C/68°F)		1 – 4 kΩ
Engine coolant temperature sensor resistance (at 20°C/68°F)		2.3 – 2.6 kΩ
Fuel injector resistance (at 20°C/68°F)		11.1 – 12.3 Ω
Cam pulse generator peak voltage		0.7 V minimum
Ignition pulse generator peak voltage		0.7 V minimum
Manifold absolute pressure at idle		200 – 250 mm Hg (7.9 – 9.8 in Hg)
Fuel pressure at idle		343 kPa (3.5 kgf/cm², 50 psi)
Fuel pump flow (at 12 V)		190 cm³ (6.4 US oz , 6.7 Imp oz) minimum/10 seconds

COOLING SYSTEM

ITEM			SPECIFICATIONS
Coolant capacity	Radiator and engine	'00 – '01	2.5 ℓ (2.6 US qt , 2.2 Imp qt)
		After '01	2.9 ℓ (3.1 US qt , 2.6 Imp qt)
	Reserve tank		0.43 ℓ (0.45 US qt , 0.38 Imp qt)
Radiator cap relief pressure			108 – 137 kPa (1.1 – 1.4 kgf/cm², 16 – 20 psi)
Thermostat	Begin to open		80 – 84 °C (176 – 183 °F)
	Fully open		95 °C (203 °F)
	Valve lift		8 mm (0.3 in) minimum
Recommended antifreeze			Pro Honda HP Coolant or an equivalent high quality ethylene glycol antifreeze containing silicate-free corrosion inhibitors
Standard coolant concentration			1:1 mixture with soft water

CRANKCASE/TRANSMISSION

Unit: mm (in)

ITEM			STANDARD	SERVICE LIMIT
Shift fork	I.D.	Left, Right	12.000 – 12.021 (0.4724 – 0.4733)	12.03 (0.474)
		Center	12.000 – 12.018 (0.4724 – 0.4731)	12.03 (0.474)
	Claw thickness		5.93 – 6.00 (0.233 – 0.236)	5.9 (0.23)
Shift fork shaft	O.D.		11.957 – 11.968 (0.4707 – 0.4712)	11.95 (0.470)
Transmission	Gear I.D.	M5	31.000 – 31.025 (1.2205 – 1.2215)	31.05 (1.222)
		M6	31.000 – 31.016 (1.2205 – 1.2211)	31.04 (1.222)
		C2, C3, C4	33.000 – 33.025 (1.2992 – 1.3002)	33.05 (1.301)
	Gear bushing O.D.	M5, M6	30.955 – 30.980 (1.2187 – 1.2197)	30.93 (1.218)
		C2	32.955 – 32.980 (1.2974 – 1.2984)	32.93 (1.296)
		C3, C4	32.950 – 32.975 (1.2972 – 1.2982)	32.93 (1.296)
	Gear-to-bushing clearance	M5	0.020 – 0.070 (0.0008 – 0.0028)	0.11 (0.004)
		M6	0.020 – 0.061 (0.0008 – 0.0024)	0.10 (0.004)
		C2	0.020 – 0.070 (0.0008 – 0.0028)	0.11 (0.004)
		C3, C4	0.025 – 0.075 (0.0010 – 0.0030)	0.11 (0.004)
	Gear bushing I.D.	M5	27.985 – 28.006 (1.1018 – 1.1026)	28.02 (1.103)
		C2	29.985 – 30.006 (1.1805 – 1.1813)	30.02 (1.182)
	Mainshaft O.D.	at M5	27.967 – 27.980 (1.1011 – 1.1016)	27.94 (1.100)
	Countershaft O.D.	at C2	29.950 – 29.975 (1.1791 – 1.1801)	29.92 (1.178)
	Bushing-to-shaft clearance	M5	0.005 – 0.039 (0.0002 – 0.0015)	0.06 (0.002)
		C2	0.010 – 0.056 (0.0004 – 0.0022)	0.06 (0.002)

CRANKSHAFT/PISTON/CYLINDER

Unit: mm (in)

ITEM			STANDARD	SERVICE LIMIT
Crankshaft	Connecting rod side clearance		0.10 – 0.30 (0.004 – 0.012)	0.40 (0.016)
	Crankpin bearing oil clearance		0.032 – 0.050 (0.0013 – 0.0020)	0.060 (0.0024)
	Main journal bearing oil clearance		0.020 – 0.038 (0.0008 – 0.0015)	0.048 (0.0019)
	Runout		———	0.10 (0.004)
Piston, piston pin, piston ring	Piston O.D. at 10 (0.4) from bottom		99.970 – 99.990 (3.9358 – 3.9366)	99.900 (3.9331)
	Piston pin hole I.D.		23.002 – 23.008 (0.9056 – 0.9058)	23.03 (0.907)
	Piston pin O.D.		22.994 – 23.000 (0.9053 – 0.9055)	22.984 (0.9049)
	Piston-to-piston pin clearance		0.002 – 0.014 (0.0001 – 0.0006)	0.046 (0.0018)
	Piston rig end gap	Top	0.20 – 0.30 (0.008 – 0.012)	0.45 (0.018)
		Second	0.30 – 0.40 (0.012 – 0.016)	0.55 (0.022)
		Oil (side rail)	0.10 – 0.50 (0.004 – 0.020)	0.65 (0.026)
	Piston ring-to-ring groove clearance	Top	0.065 – 0.100 (0.0026 – 0.0039)	0.115 (0.0045)
		Second	0.035 – 0.070 (0.0014 – 0.0028)	0.085 (0.0033)
Cylinder	I.D.		100.005 – 100.025 (3.9372 – 3.9380)	100.100 (3.9409)
	Out-of-round		———	0.10 (0.004)
	Taper		———	0.10 (0.004)
	Warpage		———	0.05 (0.002)
Cylinder-to-piston clearance			0.015 – 0.055 (0.0006 – 0.0022)	0.200 (0.0079)
Connecting rod small end I.D.			23.020 – 23.041 (0.9063 – 0.9071)	23.051 (0.9075)
Connecting rod-to-piston pin clearance			0.020 – 0.047 (0.0008 – 0.0019)	0.067 (0.0026)

BATTERY/CHARGING SYSTEM

ITEM			SPECIFICATIONS
Battery	Capacity		12V−10AH
	Current leakage		0.1 mA max.
	Voltage (20°C/68°F)	Fully charged	13.0−13.2 V
		Needs charging	Below 12.3 V
	Charging current	Normal	1.2 A × 5−10 h
		Quick	5.0 A × 1.0 h
Alternator	Capacity		0.329 kW/5,000 rpm
	Charging coil resistance (20°C/68°F)		0.2−0.5 Ω

IGNITION SYSTEM

ITEM			SPECIFICATIONS
Spark plug	Standard	'00−'01	FR9BI−11 (NGK) , IK27C11 (DENSO)
		After '01	IFR9H11 (NGK) , VK27PRZ11 (DENSO)
	For cold climate (below 5°C/41°F)	'00−'01	FR8BI−11 (NGK) , IK24C11 (DENSO)
		After '01	IFR8H11 (NGK) , VK24PRZ11 (DENSO)
Spark plug gap			1.00−1.10 mm (0.039−0.043 in)
Ignition coil primary peak voltage			100 V minimum
Ignition pulse generator peak voltage			0.7 V minimum
Ignition timing ("F" mark)			15° BTDC at idle

ELECTRIC STARTER

Unit: mm (in)

ITEM	STANDARD	SERVICE LIMIT
Starter motor brush length	12.0−13.0 (0.47−0.51)	6.5 (0.26)

LIGHTS/METERS/SWITCHES

ITEM			SPECIFICATIONS
Bulbs	Headlight (High beam)		12 V−55 W
	Headlight (Low beam)		12 V−55 W
	Front turn signal/running light		12V−32/3 cp× 2
	Rear turn signal light	'00−'01	12V−32 cp× 2
		After '01	12V−23W × 2
	Brake/taillight	'00−'01	12V−21/5W× 2
		After '01	12V−23/8W× 2
	License light		12V−8W
Fuse	Main fuse		30A
	FI fuse		30A
	Sub-fuse	'00−'01	10 A × 5, 20 A × 1
		After '01	10 A × 4, 20 A × 2
Thermosensor resistance	At 80°C (176°F)		47−57 Ω
	At 120°C (248°F)		14−18 Ω
Fan motor switch ('00−'01)	Starts to close (ON)		98−102 °C (208−216 °F)
	Starts to open (OFF)		93−97 °C (199−207 °F)
ECT sensor resistance (After '01)	Pink/White−Green/Orange	At 80°C (176°F)	310−326 Ω
		At 110°C (230°F)	139.9−143.5 Ω

TORQUE VALUES

STANDARD

FASTENER TYPE	TORQUE N·m (kgf·m, lbf·ft)	FASTENER TYPE	TORQUE N·m (kgf·m, lbf·ft)
5 mm bolt and nut	5 (0.5 , 3.6)	5 mm screw	4 (0.4 , 2.9)
6 mm bolt and nut	10 (1.0 , 7)	6 mm screw	9 (0.9 , 6.5)
8 mm bolt and nut	22 (2.2 , 16)	6 mm flange bolt (8 mm head, small flange)	10 (1.0 , 7)
10 mm bolt and nut	34 (3.5 , 25)	6 mm flange bolt (8 mm head, large flange)	12 (1.2 , 9)
12 mm bolt and nut	54 (5.5 , 40)	6 mm flange bolt (10 mm head) and nut	12 (1.2 , 9)
		8 mm flange bolt and nut Engine	23 (2.3 , 17)
		Frame	26 (2.7 , 20)
		10 mm flange bolt and nut	39 (4.0 , 29)

- Torque specifications listed below are for important fasteners.
- Others should be tightened to standard torque values listed above.

NOTES:
1. Apply sealant to the threads.
2. Apply locking agent to the threads.
3. Plastic region torque bolt; replace with a new one
4. Stake.
5. Apply oil to the threads and seating surface.
6. Apply oil to the O-ring.
7. U-nut.
8. ALOC bolt/screw: replace with a new one.
9. Apply grease to the threads.

ENGINE

ITEM	Q'TY	THREAD DIA. (mm)	TORQUE N·m (kgf·m, lbf·ft)	REMARKS
MAINTENANCE:				
Spark plug	2	14	18 (1.8 , 13)	
Crankshaft hole cap	1	30	15 (1.5 , 11)	NOTE 9
Timing hole cap	1	14	10 (1.0 , 7)	NOTE 9
Engine oil filter cartridge	1	20	25 (2.6 , 19)	NOTE 5, 6
Engine oil drain bolt	1	12	29 (3.0 , 22)	
LUBRICATION SYSTEM:				
Oil pump bolt	1	6	8 (0.8 , 5.8)	
FUEL SYSTEM (Programmed Fuel Injection):				
Throttle body insulator band bolt	4	5	1 (0.1 , 0.7)	
PAIR check valve cover bolt	4	5	5 (0.5 , 3.6)	NOTE 2
Pressure regulator nut	1	18	27 (2.8 , 20)	
Pipe stay bolt	8	5	5 (0.5 , 3.6)	
Fuel feed pipe bolt	12	5	5 (0.5 , 3.6)	
Starter valve nut	2	10	2 (0.2 , 1.4)	
Throttle stop screw cable stay screw	2	4	2 (0.2 , 1.4)	
MAP sensor stay screw ('00 – '01)	2	5	3 (0.3 , 2.2)	
(After '01)	2	5	2.1 (0.21 , 1.5)	
Throttle cable stay screw	2	5	3 (0.3 , 2.2)	
ENGINE MOUNTING:				
Drive sprocket bolt	1	10	54 (5.5 , 40)	
CYLINDER HEAD/VALVE:				
Cylinder head cover bolt	6	6	10 (1.0 , 7)	
Camshaft holder bolt	16	7	23 (2.3 , 17)	NOTE 5
Cylinder head bolt	8	11	64 (6.5 , 47)*	NOTE 5
Cam gear train setting bolt	2	8	25 (2.5 , 18)	
Cam gear train mounting bolt	8	6	12 (1.2 , 9)	
Cylinder head sealing bolt	2	14	18 (1.8 , 13)	NOTE 2

*Torque if a new cylinder head bolt is used; 70 N·m (7.1 kgf·m , 51 lbf·ft) for used bolt.

ENGINE (Cont'd)

ITEM	Q'TY	THREAD DIA. (mm)	TORQUE N·m (kgf·m, lbf·ft)	REMARKS
CLUTCH/GEARSHIFT LINKAGE:				
Clutch slave cylinder bleed valve	1	8	9 (0.9 , 6.5)	
Clutch bolt	6	6	12 (1.2 , 9)	
Clutch center lock nut	1	25	127 (13.0 , 94)	NOTE 4, 5
Oil pump driven sprocket bolt	1	6	15 (1.5 , 11)	NOTE 2
Gearshift cam bolt	1	8	23 (2.3 , 17)	NOTE 2
Shift drum stopper arm pivot bolt	1	6	12 (1.2 , 9)	
Gearshift spindle return spring pin	1	8	23 (2.3 , 17)	
Primary drive gear bolt	1	12	88 (9.0 , 65)	NOTE 5
Right crankcase cover sealing bolt	1	8	23 (2.3 , 17)	NOTE 2
Clutch cover plate bolt	1	6	12 (1.2 , 9)	NOTE 2
ALTERNATOR/STARTER CLUTCH:				
Flywheel bolt	1	12	157 (16.0 , 116)	NOTE 5
Starter clutch bolt	6	8	23 (2.3 , 17)	NOTE 2
Alternator stator bolt	3	6	12 (1.2 , 9)	
CRANKCASE/TRANSMISSION:				
Crankcase flange bolt	3	10	39 (4.0 , 29)	NOTE 5
Crankcase special bolt (black)	4	10	52 (5.3 , 38)	NOTE 5
Crankcase special bolt (gray)	4	10	20 (2.0 , 14) + 120°	NOTE 3, 5
Shift drum bearing washer/bolt	2	6	12 (1.2 , 9)	NOTE 2
Crankcase sealing bolt	1	14	18 (1.8 , 13)	NOTE 2
CRANKSHAFT/PISTON/CYLINDER:				
Connecting rod bolt	4	9	29 (3.0 , 22) + 120°	NOTE 3, 5
Oil jet	2	5	2 (0.2 , 1.4)	NOTE 2
IGNITION SYSTEM:				
Ignition pulse generator bolt	2	6	12 (1.2 , 9)	NOTE 2
ELECTRIC STARTER:				
Starter motor cable terminal nut	1	6	10 (1.0 , 7)	
LIGHTS/METERS/SWITCHES:				
Neutral switch	1	10	12 (1.2 , 9)	
Engine coolant temperature (ECT)/thermosensor	1	12	23 (2.3 , 17)	
Oil pressure switch	1	PT 1/8	12 (1.2 , 9)	NOTE 1
Oil pressure switch terminal screw	1	4	2 (0.2 , 1.4)	

FRAME

ITEM		Q'TY	THREAD DIA. (mm)	TORQUE N·m (kgf·m, lbf·ft)	REMARKS
FRAME/BODY PANELS/EXHAUST SYSTEM:					
Lower fairing-to-upper fairing bolt	('00–'01)	6	5	2 (0.2 , 1.4)	
	(After '01)	6	5	1.5 (0.15 , 1.1)	
Lower inner fairing-to-lower fairing bolt	('00–'01)	2	5	2 (0.2 , 1.4)	
	(After '01)	2	5	1.5 (0.15 , 1.1)	
Windscreen attaching bolt	('00–'01)	6	5	2 (0.2 , 1.4)	
Windscreen attaching screw	(After '01)	6	5	0.4 (0.04 , 0.3)	
Exhaust pipe joint nut		4	7	12 (1.2 , 9)	
Muffler band bolt		4	8	26 (2.7 , 20)	
Rider footpeg holder bolt		4	8	26 (2.7 , 20)	
Passenger footpeg holder bolt		4	8	26 (2.7 , 20)	
Seat rail mounting bolt		4	10	44 (4.5 , 33)	
FUEL SYSTEM:					
Fuel feed hose banjo bolt		1	12	22 (2.2 , 16)	
Fuel feed hose nut		1	12	22 (2.2 , 16)	
Fuel pump unit mounting nut		7	6	12 (1.2 , 9)	
Fuel fill cap mounting bolt	('00–'01)	3	4	2 (0.2 , 1.4)	
	(After '01)	3	4	1.8 (0.18 , 1.3)	
Air cleaner cover screw	(After '01)	7	—	1.1 (0.11 , 0.8)	
ENGINE MOUNTING:					
Center engine hanger bolt		2	12	64 (6.5 , 47)	
Front/rear upper engine hanger nut		2	12	64 (6.5 , 47)	
Rear lower engine hanger nut		1	10	39 (4.0 , 29)	
Front engine hanger adjusting bolt	('00–'01)	1	20	4 (0.4 , 2.9)	
Center/rear engine hanger adjusting bolt	('00–'01)	3	20	10 (1.0 , 7)	
Engine hanger adjusting bolt lock nut	('00–'01)	4	20	54 (5.5 , 40)	
CLUTCH/GEARSHIFT LINKAGE:					
Clutch reservoir mounting screw		1	4	2 (0.2 , 1.4)	NOTE 2
Clutch reservoir cap stopper plate screw		1	4	1 (0.1 , 0.7)	
Clutch lever pivot bolt		1	6	1 (0.1 , 0.7)	
Clutch lever pivot nut		1	6	6 (0.6 , 4.3)	
Clutch hose oil bolt		2	10	34 (3.5 , 25)	
FRONT WHEEL/SUSPENSION/STEERING:					
Handlebar weight mounting screw		2	6	10 (1.0 , 7)	NOTE 8
Front axle bolt		1	14	59 (6.0 , 43)	
Front axle holder bolt		4	8	22 (2.2 , 16)	
Front brake disc bolt		12	6	20 (2.0 , 14)	NOTE 8
Fork cap		2	46	34 (3.5 , 25)	
Fork center bolt		2	22	34 (3.5 , 25)	
Fork top bridge pinch bolt		2	8	26 (2.7 , 20)	
Fork bottom bridge pinch bolt		4	8	26 (2.7 , 20)	
Front brake hose clamp nut (front fender side)		2	6	10 (1.0 , 7)	
Front brake caliper bracket bolt		4	10	49 (5.0 , 36)	NOTE 2
Steering stem nut	('00–'01)	1	24	103 (10.5 , 76)	Page 13-35
	(After '01)	1	33	137 (14.0 , 101)	
Steering bearing adjustment nut	('00–'01)	1	26	32 (3.3 , 24)	
	(After '01)	1	35	52 (5.3 , 38)	
Steering bearing adjustment nut lock nut		1	26	—	
Front brake hose clamp bolt (stem side)		1	6	10 (1.0 , 7)	
Front brake hose 3-way joint bolt		1	6	10 (1.0 , 7)	

FRAME (Cont'd)

ITEM		Q'TY	THREAD DIA. (mm)	TORQUE N·m (kgf·m, lbf·ft)	REMARKS
REAR WHEEL/SUSPENSION:					
Rear axle nut		1	22	127 (13 , 94)	
Rear brake disc bolt		4	8	42 (4.3 , 31)	NOTE 8
Final driven sprocket nut		6	10	64 (6.5 , 47)	
Shock absorber upper mounting nut		1	10	44 (4.5 , 33)	NOTE 7
Shock absorber lower mounting nut		1	10	44 (4.5 , 33)	NOTE 7
Shock arm-to-swingarm nut		1	10	44 (4.5 , 33)	NOTE 7
Shock arm-to-shock link nut		1	10	44 (4.5 , 33)	NOTE 7
Shock link-to-frame nut		1	10	44 (4.5 , 33)	NOTE 7
Swingarm pivot adjusting bolt		2	36	15 (1.5 , 11)	
Swingarm pivot adjusting bolt lock nut		2	36	64 (6.5 , 47)	
Swingarm pivot nut	('00 – '01)	1	22	127 (13.0 , 94)	NOTE 7
	(After '01)	1	18	93 (9.5 , 69)	NOTE 7
Drive chain slider bolt		2	6	9 (0.9 , 6.5)	NOTE 2
Rear brake hose clamp bolt	('00 – '01)	1	6	12 (1.2 , 9)	NOTE 2
Rear brake hose clamp screw	(After '01)	1	5	4.2 (0.43 , 3.1)	NOTE 2
HYDRAULIC BRAKE:					
Brake caliper bleed valve		3	8	6 (0.6 , 4.3)	
Front brake reservoir cap screw		2	4	2 (0.2 , 1.4)	
Rear brake caliper pad pin plug	('00 – '01)	1	10	3 (0.3 , 2.2)	
	(After '01)	1	10	2.5 (0.25 , 1.8)	
Pad pin		3	10	18 (1.8 , 13)	
Brake hose oil bolt		5	10	34 (3.5 , 25)	
Front brake lever pivot bolt		1	6	1 (0.1 , 0.7)	
Front brake lever pivot nut		1	6	6 (0.6 , 4.3)	
Front brake reservoir mounting nut		1	6	6 (0.6 , 4.3)	NOTE 7
Front brake reservoir stay bolt		1	6	12 (1.2 , 9)	
Front brake light switch screw	('00 – '01)	1	4	1 (0.1 , 0.7)	
	(After '01)	1	4	1.2 (0.12 , 0.9)	
Front master cylinder holder bolt		2	6	12 (1.2 , 9)	
Rear brake reservoir mounting bolt		1	6	9 (0.9 , 6.5)	
Rear master cylinder mounting bolt		2	6	10 (1.0 , 7)	
Rear master cylinder joint nut		1	8	18 (1.8 , 13)	
Rear brake reservoir hose joint screw	('00 – '01)	1	4	2 (0.2 , 1.4)	NOTE 2
	(After '01)	1	4	1.5 (0.15 , 1.1)	NOTE 2
Front brake caliper mounting bolt		4	8	30 (3.1 , 22)	NOTE 2
Front brake caliper assembly bolt		8	8	23 (2.3 , 17)	NOTE 2
Rear brake caliper bolt		1	8	23 (2.3 , 17)	
Rear brake caliper pin bolt		1	12	27 (2.8 , 20)	
LIGHTS/METERS/SWITCHES:					
Side stand switch bolt		1	6	10 (1.0 , 7)	
Ignition switch mounting bolt		2	8	25 (2.5 , 18)	
Fan motor switch		1	16	18 (1.8 , 13)	
OTHERS:					
Side stand pivot bolt		1	10	10 (1.0 , 7)	
Side stand pivot lock nut		1	10	29 (3.0 , 22)	
Side stand bracket bolt		2	10	44 (4.5 , 33)	NOTE 8
Bank sensor bolt		2	6	10 (1.0 , 7)	
Gearshift pedal pivot bolt		1	8	26 (2.7 , 20)	
Rear shock absorber upper mounting bracket nut		1	16	93 (9.5 , 69)	NOTE 7

DESCRIPTION	TOOL NUMBER	REMARKS	REF. SECTION
Mechanical seal driver attachment	07945-4150400	NOTE 3: 07965-415000A (U.S.A. only)	6
Attachment, 28 ×30 mm	07946-1870100		6, 14 (After '01)
Driver attachment A ('00 – '01)	07946-KM90100	NOTE 2	13
Driver shaft assembly	07946-KM90300	NOTE 2	13
Race remover A ('00 – '01)	07946-KM90401	NOTE 2	13
Assembly base	07946-KM90600	NOTE 2	13
Main bearing driver attachment	07946-ME90200		13
Fork seal driver weight	07947-KA50100		13
Driver	07949-3710001		14
Oil seal driver	07965-MA60000		13
Remover base	07965-SD90100		6
Socket wrench, 39 × 41 mm (After'01)	07GMA-KS40100	NOTE 1	13
Oil filter wrench	07HAA-PJ70100		3, 4
Peak voltage adaptor	07HGJ-0020100	NOTE 2 NOTE 3: Peak voltage tester (U.S.A. only) or IgnitionMate peak voltage tester, MTP-08-0193 (U.S.A. only)	5, 17, 19
Drive chain tool set	07HMH-MR10103	NOTE 3: 07HMH-MR1010B or 07HMH-MR1010C (U.S.A. only)	3
Seal driver, 58 mm	07JAD-PH80101		6
Pilot, 32 mm ('00 – '01)	07MAD-PR90200		14
Race remover B	07NMF-MT70110	NOTE 2	13
Driver attachment B	07NMF-MT70120	After '01: two required NOTE 2	13
Pilot collar, 22 mm	07PAF-0010680	NOTE 3: 07KMF-MT20200	6
Oil pressure gauge joint adaptor	07RMK-MW40100	NOTE 2	4
Lock nut wrench, 20 mm ('00 – '01)	07VMA-MBB0100	NOTE 3: 07VMA-MBB0101	7
Installer shaft	07VMF-KZ30200		13
Installer attachment A ('00 – '01)	07VMF-MAT0100		13
Installer attachment B	07VMF-MAT0200	After '01: two required	13
Remover attachment A ('00 – '01)	07VMF-MAT0300		13
Remover attachment B	07VMF-MAT0400		13
Cutter holder, 6 mm	07VMH-MBB0100	NOTE 1	8
Valve guide reamer, 6.0 mm	07VMH-MBB0200	NOTE 3: 07VMH-MBB020A (U.S.A. only)	8
Inspection adaptor	07VMJ-0020100	NOTE 1	17
Lock nut wrench, 5.8 × 46 mm	07YMA-MCF0100	NOTE 3: 07YMA-MCFA100 (U.S.A. only)	7, 14
Fork damper holder	07YMB-MCF0101	NOTE 3: 07YMB-MCFA100 (U.S.A. only)	13
Fork seal driver, 43 mm	07YMD-MCF0100	NOTE 3: 07KMD-KZ30100 with 07NMD-KZ30101 (except U.S.A.) or 07NMD-KZ3010A (U.S.A. only)	13
Torque limiter inspection tool A	07YMJ-MCF0100	NOTE 2	10
Torque limiter inspection tool B	07YMJ-MCF0200	NOTE 2	10
ECM test harness	07YMZ-0010100		5
Banjo bolt, 12 mm	90008-PD6-010		5
Sealing washer, 12 mm	90428-PD6-003		5

LUBRICATION & SEAL POINTS

ENGINE

LOCATION	MATERIAL	REMARKS
Crankcase mating surfaces Right crankcase cover mating surfaces Crankcase mating surfaces (left side) Oil pan mating surface Cylinder head semi-circular area Cylinder head cover gasket mating surface (cover side) Oil pressure switch threads Ignition pulse generator wire grommet seating surface Alternator stator wire grommet seating surface	Sealant	See page 11-9 See page 6-16 See page 10-4 Do not apply to the sensor head.
Crankshaft main journal bearing sliding surface Crankpin bearing sliding surface Connecting rod small end inner surface Valve stem sliding surface Valve lifter outer surface Camshaft journals and cam lobes Clutch outer sliding surface M3/4, C5, C6 gear shift fork grooves Primary drive gear and sub gear sliding surface Piston pin Piston pin holes Each gear teeth and sliding surface Other rotating and sliding area	Molybdenum oil solution (a mixture of 1/2 engine oil and 1/2 molybdenum disulfide grease)	
Engine oil filter cartridge threads and seating surface Camshaft holder bolt threads and seating surface Cylinder head bolt threads and seating surface Clutch disc lining surface Clutch center lock nut threads and seating surface Primary drive gear bolt threads and seating surface Piston outer surface Piston ring whole surface Connecting rod bolt threads and seating surface Flywheel bolt threads and seating surface 10 mm crankcase bolt threads and seating surface Each bearing rotating area Each O-ring whole surface	Engine oil	
Timing hole cap threads Crankshaft hole cap threads Each oil seal lips	Multi-purpose grease	
Reed valve cover bolt threads Oil filter boss threads Cylinder head 14 mm sealing bolt threads Oil pump driven sprocket bolt threads Gearshift cam bolt threads Right crankcase cover sealing bolt threads Clutch cover plate bolt threads Starter clutch bolt threads Ignition pulse generator bolt threads Alternator wire clamp bolt threads Crankcase 14 mm sealing bolt threads Mainshaft bearing set plate bolt threads Shift drum bearing washer/bolt threads Oil jet threads	Locking agent	

FRAME

LOCATION	MATERIAL	REMARKS
Side stand pivot Rider footpeg sliding area Passenger footpeg sliding area Throttle grip pipe flange Seat catch hook sliding area Gearshift pedal link tie-rod ball joints Gearshift pedal pivot Rear brake pedal pivot Front wheel dust seal lips Rear wheel dust seal lips Rear wheel side collar inner surfaces	Multi-purpose grease	
Steering head bearings Steering head bearing dust seal lips	'00–'01: Molybdenum disulfide grease After '01: Extreme pressure agent mixed with water resistant UREA grease	
Shock arm and link dust seal lips Shock arm and link needle bearings Swingarm pivot bearings Swingarm pivot dust seal lips	'00–'01: Molybdenum disulfide grease After '01: Extreme pressure agent mixed with grease	
Throttle cable outer inside Choke cable outer inside	Cable lubricant	
Handlebar grip rubber inside	Honda bond A, Honda Hand Grip Cement (U.S.A. only) or equivalent	
Steering bearing adjustment nut threads	Engine oil	
Clutch lever pivot Clutch lever joint piece-to-push rod contacting area Clutch master piston-to-push rod contacting area Front brake lever-to-master piston contacting area Front brake lever pivot Rear brake caliper pin bolt sliding surfaces Rear brake master piston-to-push rod contacting area	Silicone grease	
Clutch master piston and cups Brake master piston and cups Brake caliper piston and piston seals	DOT 4 brake fluid	
Fork dust seal and oil seal lips	Pro Honda Suspension Fluid SS-8	
Oil hose joint bolt threads Oil pipe joint bolt threads Clutch fluid reservoir mounting screw threads Front brake caliper bracket bolt threads Drive chain slider bolt threads Rear brake hose clamp bolt threads Rear brake reservoir hose joint screw threads Front brake caliper assembly bolt threads Front brake caliper mounting bolt threads Caliper bracket retainer seating surface	Locking agent	

After '01:

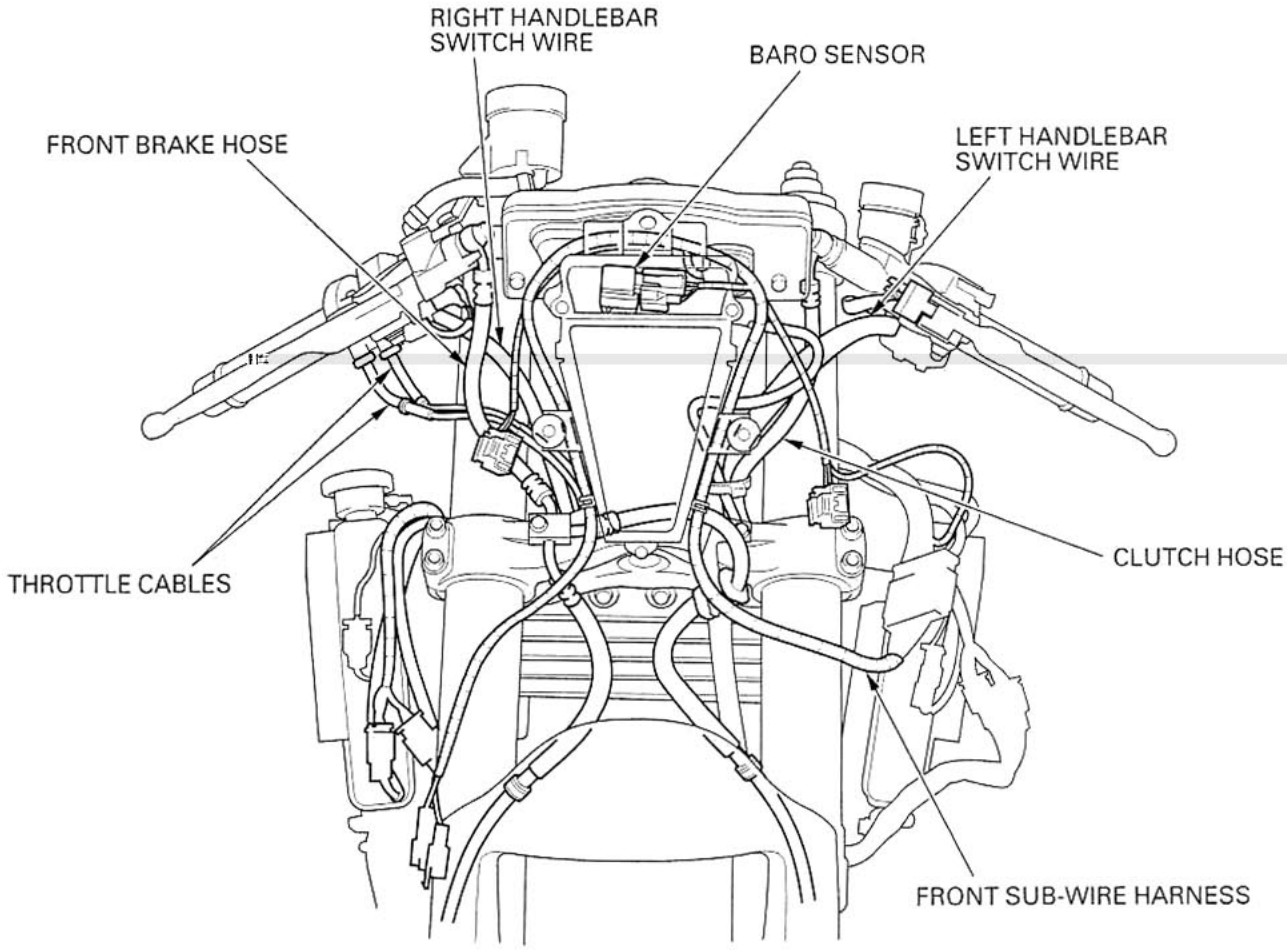
RIGHT HANDLEBAR SWITCH WIRE
BARO SENSOR
FRONT BRAKE HOSE
LEFT HANDLEBAR SWITCH WIRE
THROTTLE CABLES
CLUTCH HOSE
FRONT SUB-WIRE HARNESS

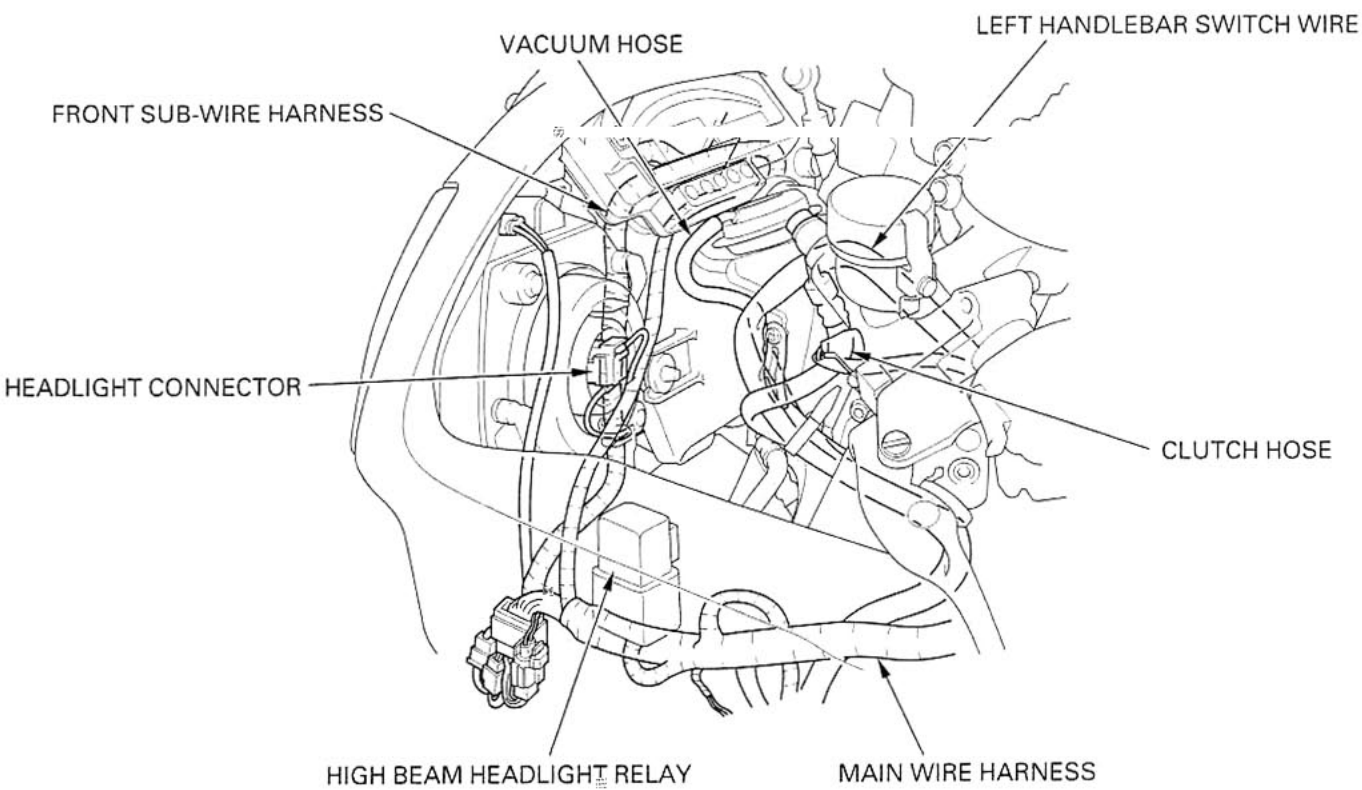
VACUUM HOSE
LEFT HANDLEBAR SWITCH WIRE
FRONT SUB-WIRE HARNESS
HEADLIGHT CONNECTOR
CLUTCH HOSE
HIGH BEAM HEADLIGHT RELAY
MAIN WIRE HARNESS

'00－'01:

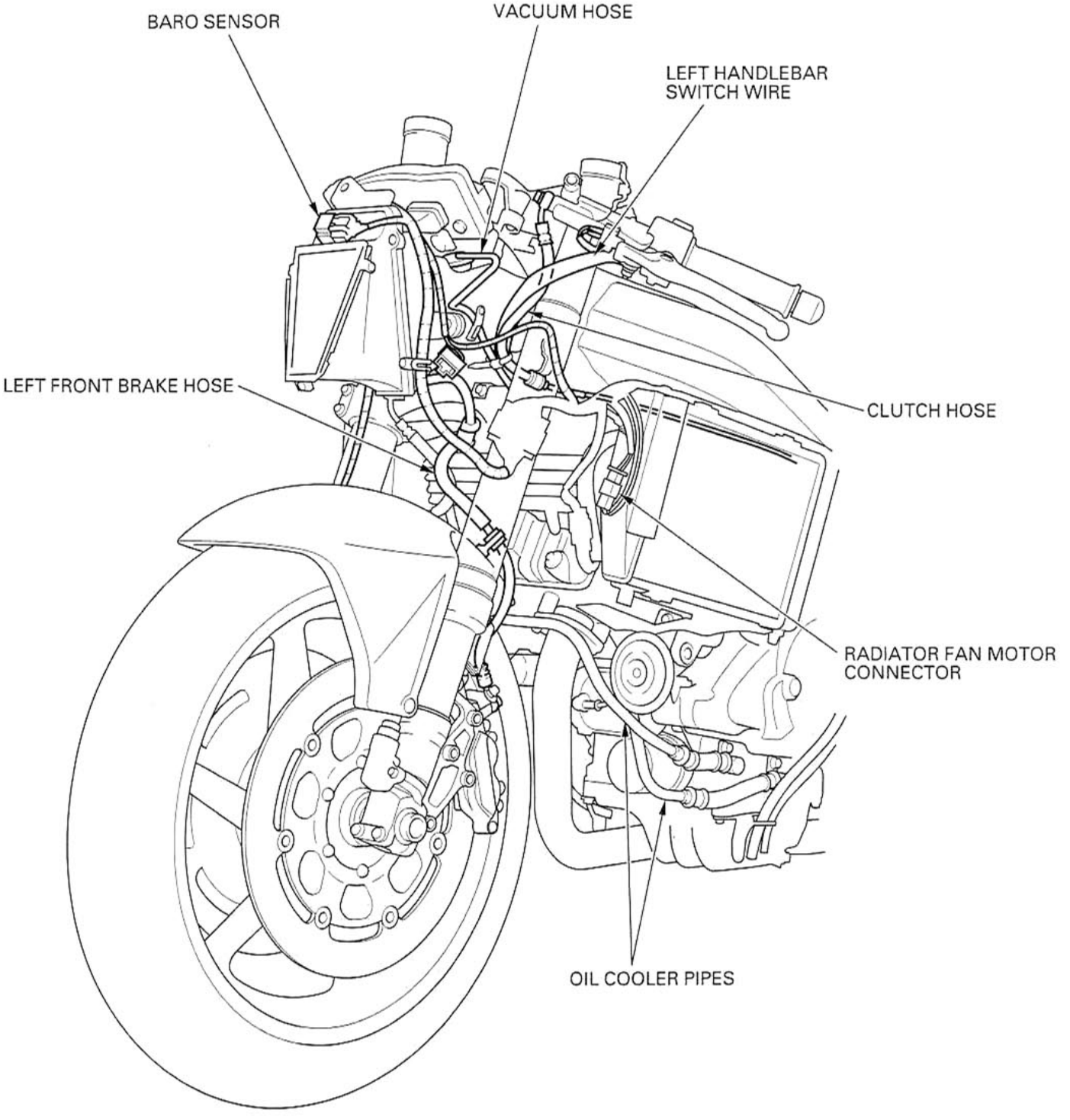
BARO SENSOR
VACUUM HOSE
LEFT HANDLEBAR SWITCH WIRE
LEFT FRONT BRAKE HOSE
CLUTCH HOSE
RADIATOR FAN MOTOR CONNECTOR
OIL COOLER PIPES

After '01:

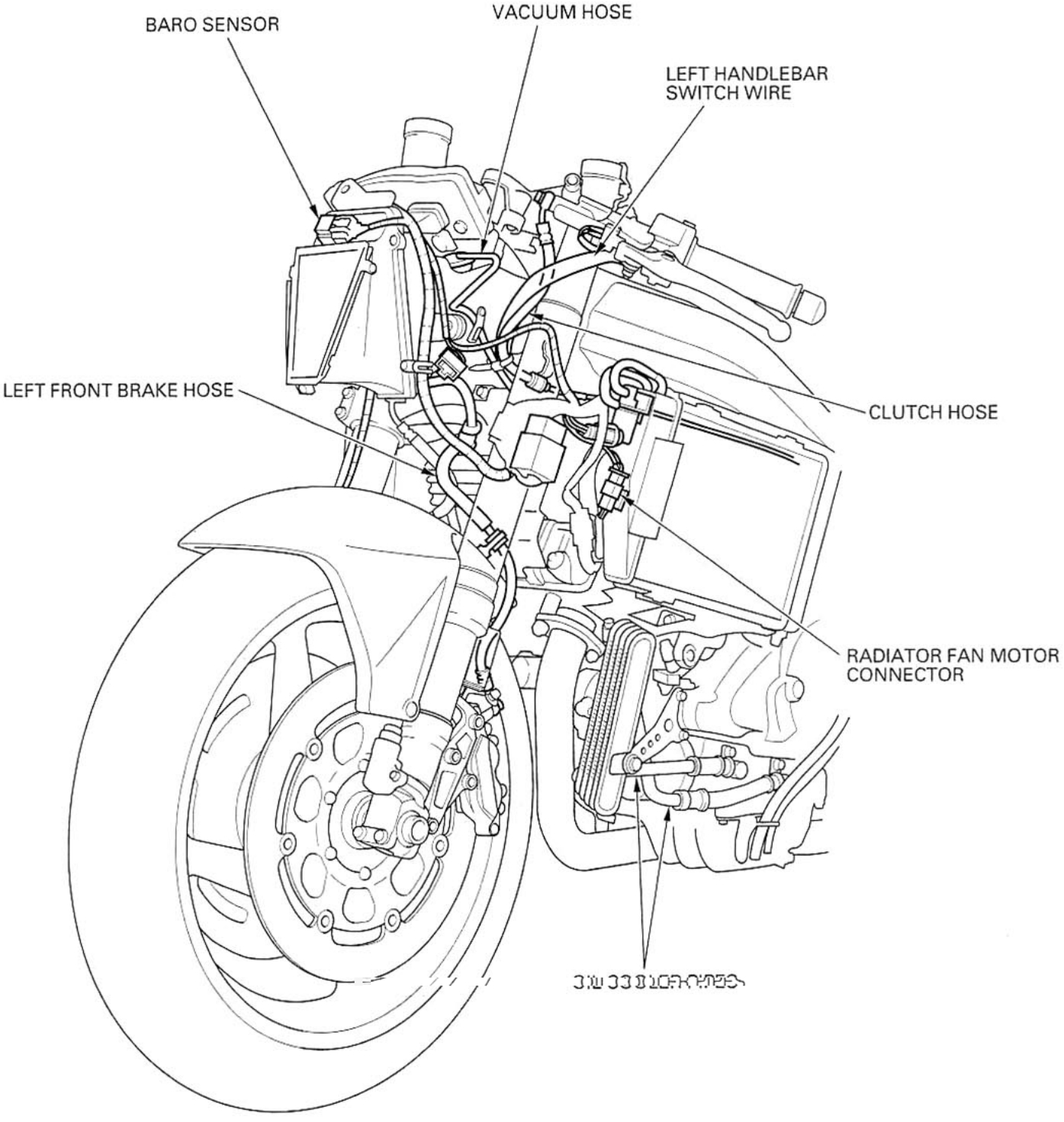
BARO SENSOR
VACUUM HOSE
LEFT HANDLEBAR SWITCH WIRE
LEFT FRONT BRAKE HOSE
CLUTCH HOSE
RADIATOR FAN MOTOR CONNECTOR

'00 – '01:

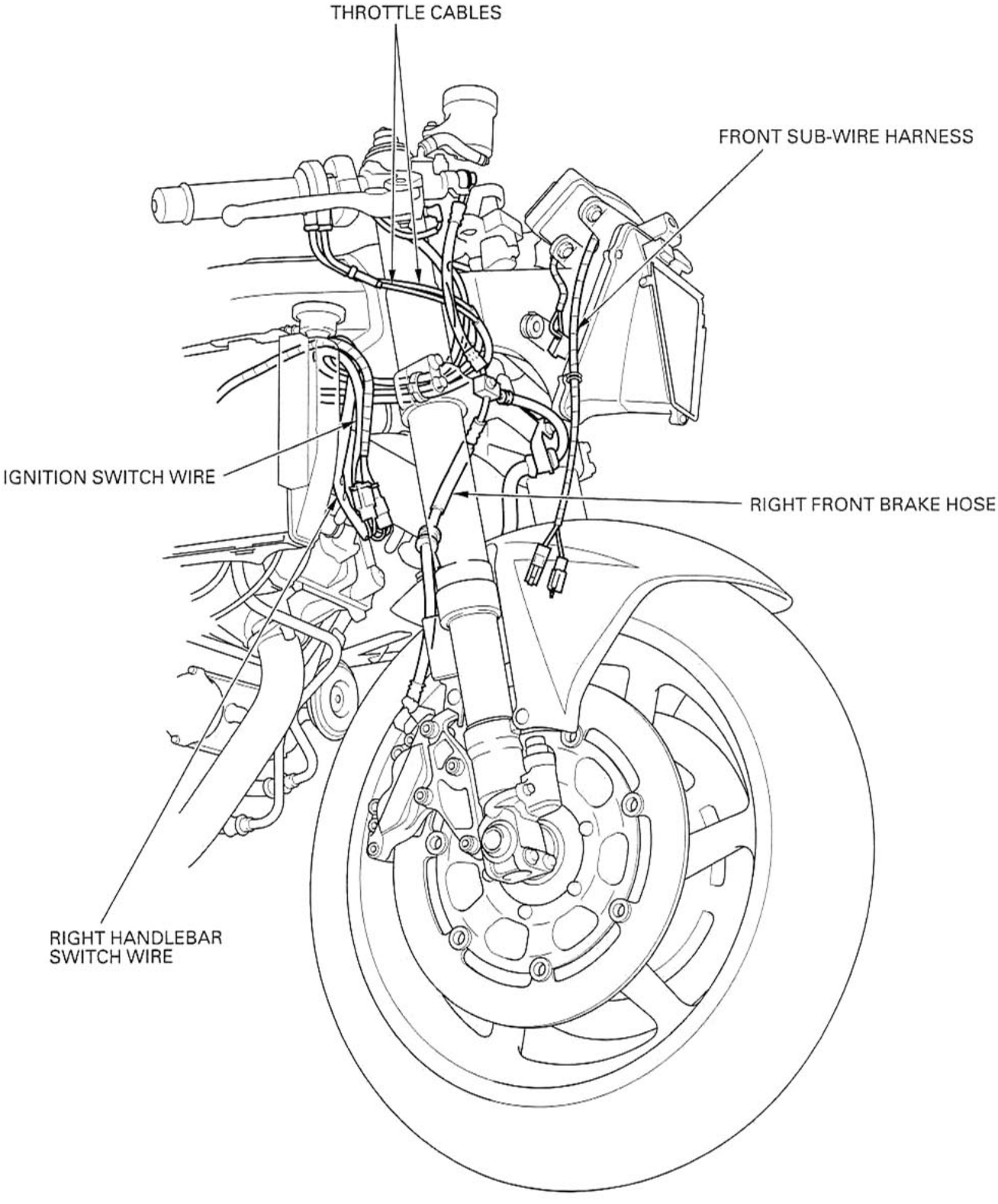
THROTTLE CABLES
FRONT SUB-WIRE HARNESS
IGNITION SWITCH WIRE
RIGHT FRONT BRAKE HOSE
RIGHT HANDLEBAR
SWITCH WIRE

After '01:

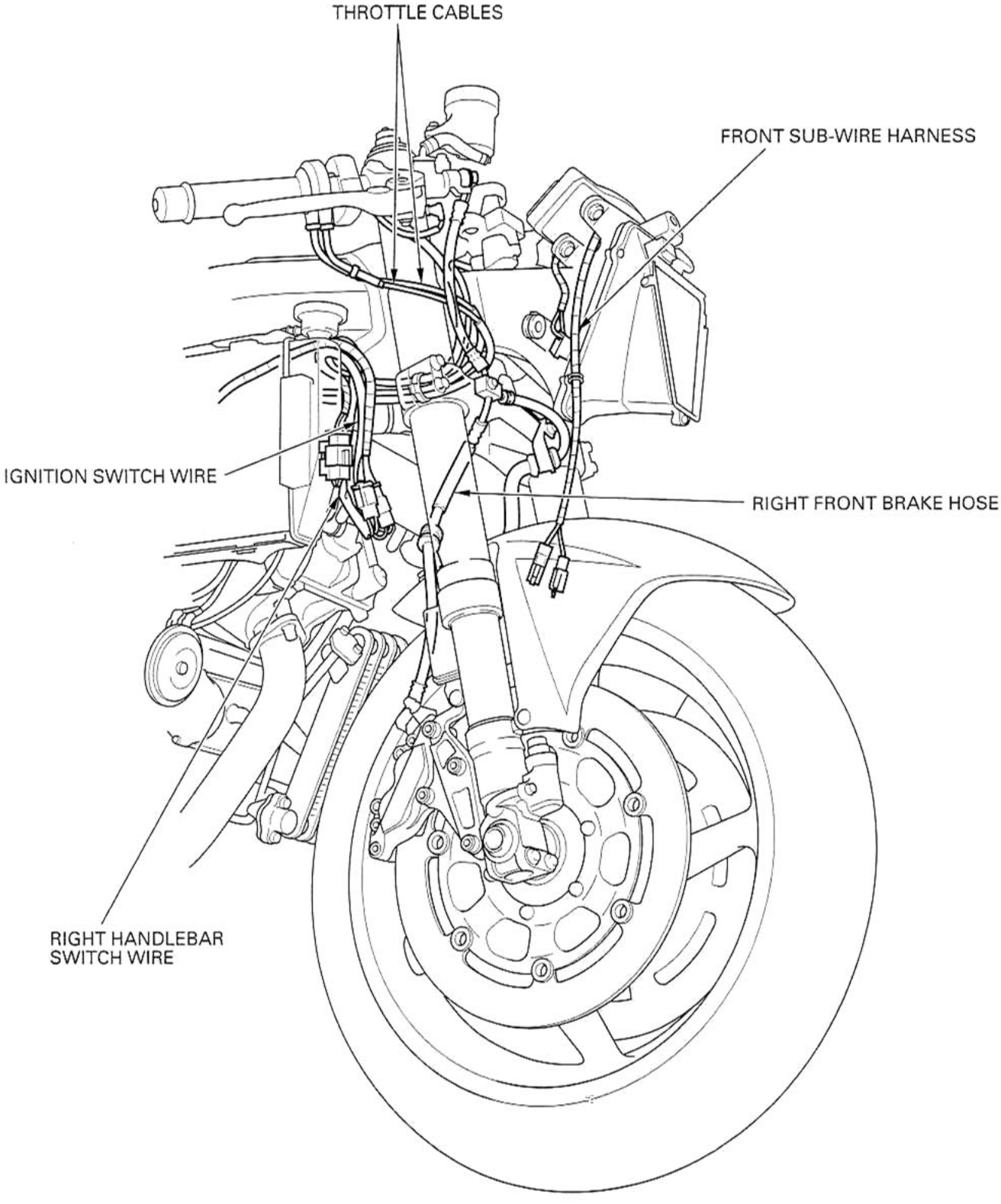
THROTTLE CABLES
FRONT SUB-WIRE HARNESS
IGNITION SWITCH WIRE
RIGHT FRONT BRAKE HOSE
RIGHT HANDLEBAR
SWITCH WIRE

After '01:

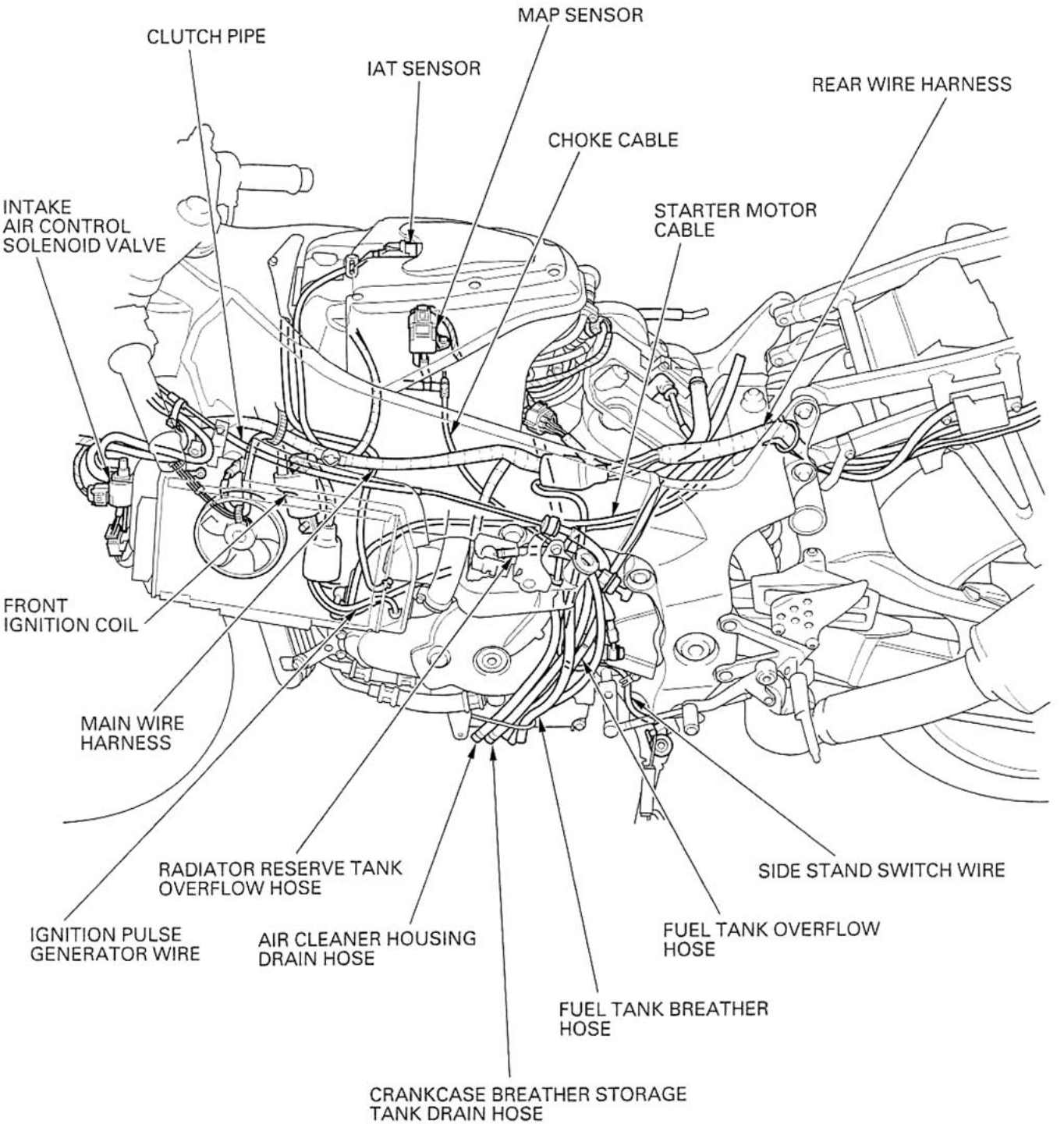
MAP SENSOR
CLUTCH PIPE
IAT SENSOR
REAR WIRE HARNESS
CHOKE CABLE
INTAKE
AIR CONTROL
SOLENOID VALVE
STARTER MOTOR
CABLE
FRONT
IGNITION COIL
MAIN WIRE
HARNESS
RADIATOR RESERVE TANK
OVERFLOW HOSE
SIDE STAND SWITCH WIRE
IGNITION PULSE
GENERATOR WIRE
AIR CLEANER HOUSING
DRAIN HOSE
FUEL TANK OVERFLOW
HOSE
FUEL TANK BREATHER
HOSE
CRANKCASE BREATHER STORAGE
TANK DRAIN HOSE

'00 – '01:

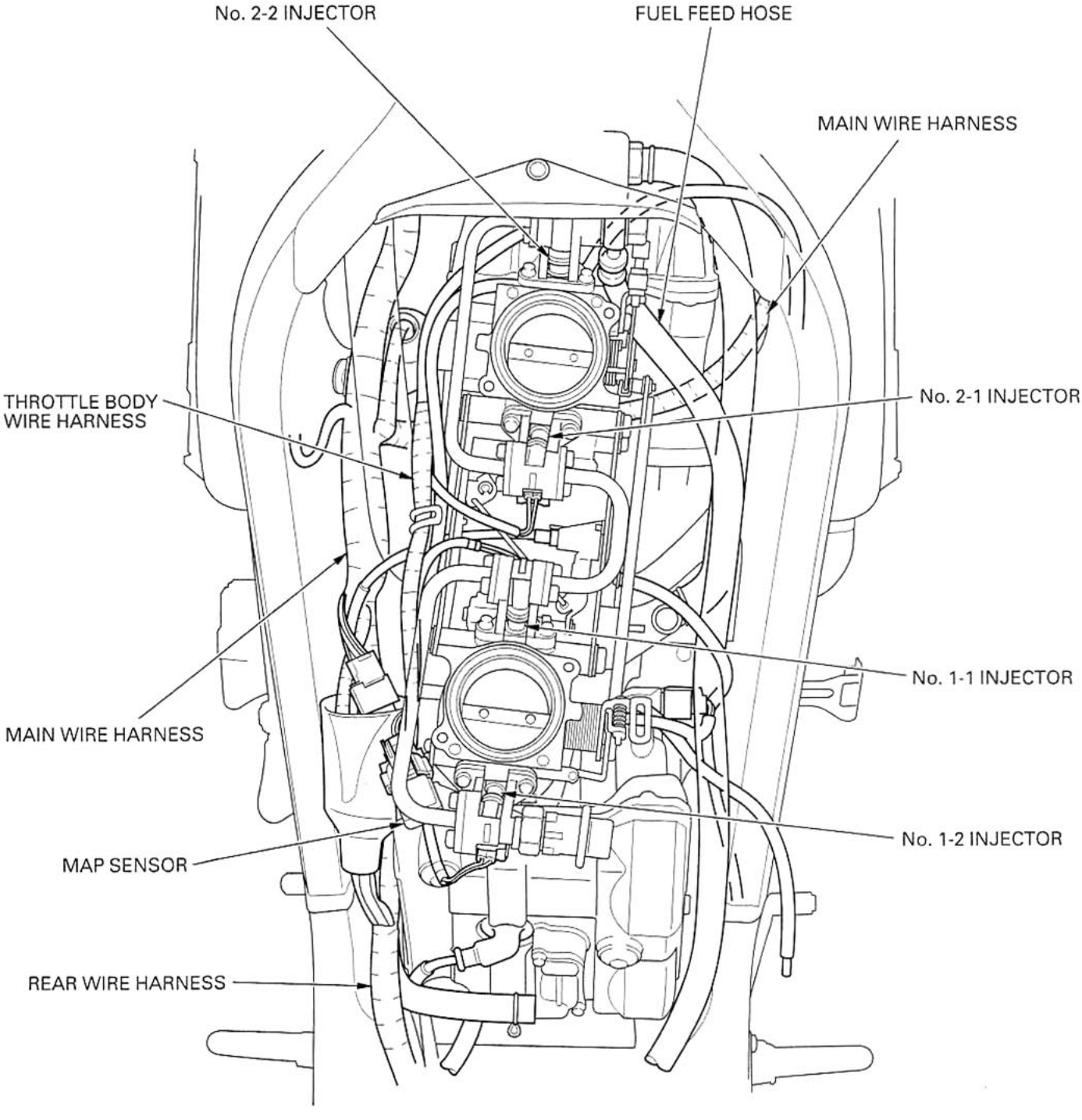
No. 2-2 INJECTOR
FUEL FEED HOSE
MAIN WIRE HARNESS
THROTTLE BODY
WIRE HARNESS
No. 2-1 INJECTOR
No. 1-1 INJECTOR
MAIN WIRE HARNESS
No. 1-2 INJECTOR
MAP SENSOR
REAR WIRE HARNESS

After '01:

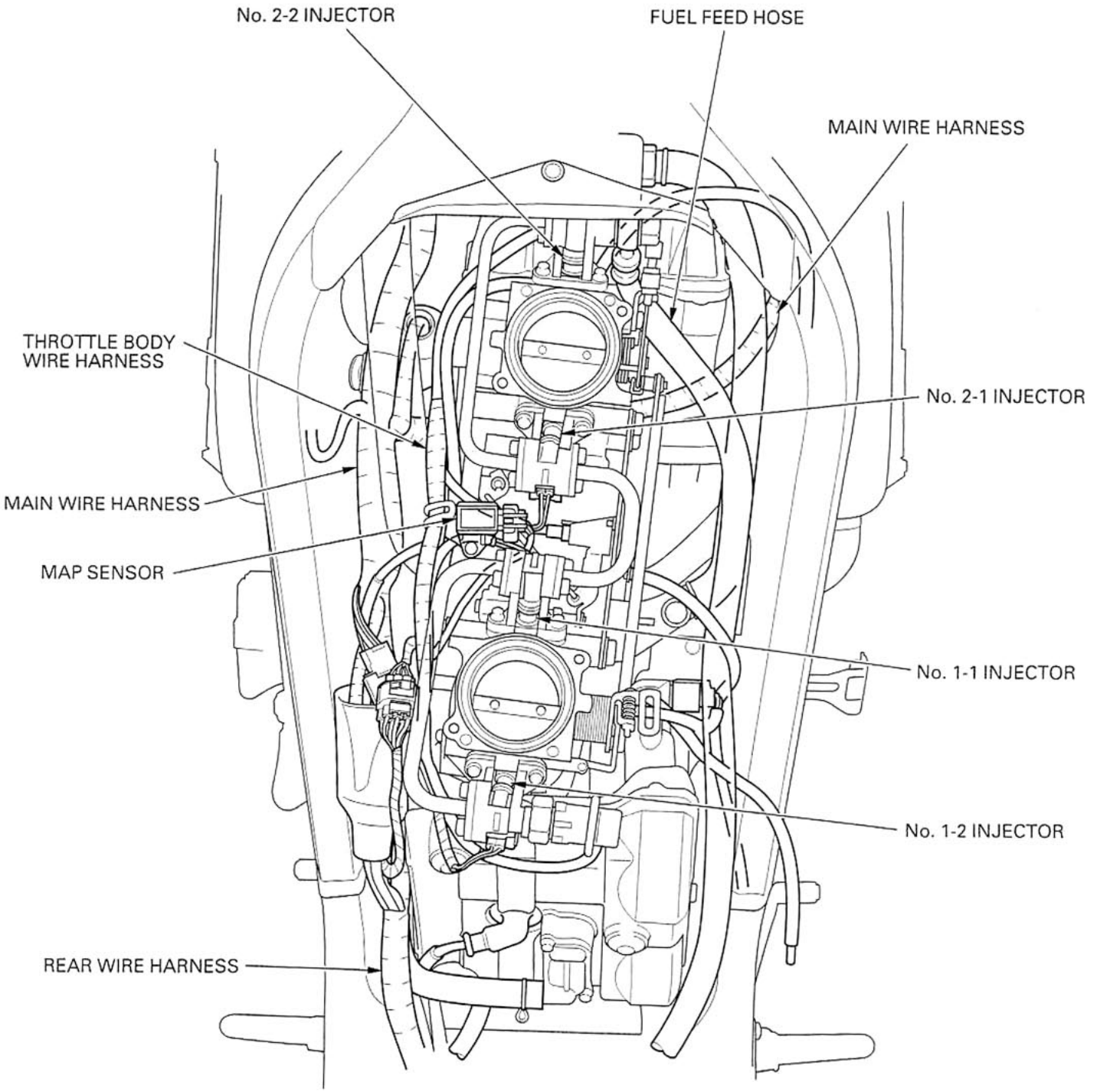
No. 2-2 INJECTOR
FUEL FEED HOSE
MAIN WIRE HARNESS
THROTTLE BODY
WIRE HARNESS
No. 2-1 INJECTOR
MAIN WIRE HARNESS
MAP SENSOR
No. 1-1 INJECTOR
No. 1-2 INJECTOR
REAR WIRE HARNESS

'00 – '01:

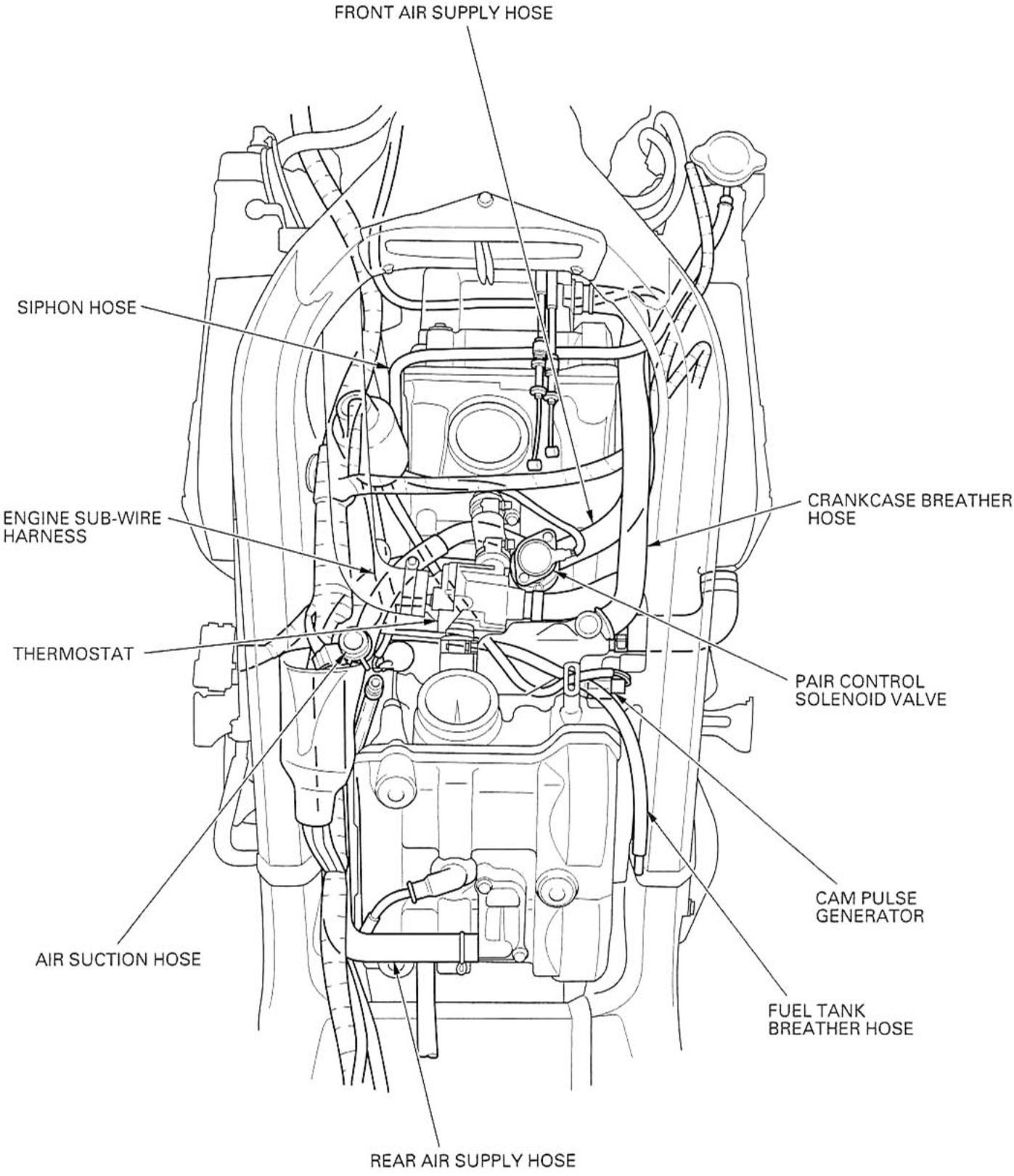
FRONT AIR SUPPLY HOSE
SIPHON HOSE
ENGINE SUB-WIRE HARNESS
THERMOSTAT
AIR SUCTION HOSE
REAR AIR SUPPLY HOSE
CRANKCASE BREATHER HOSE
PAIR CONTROL SOLENOID VALVE
CAM PULSE GENERATOR
FUEL TANK BREATHER HOSE

After '01:

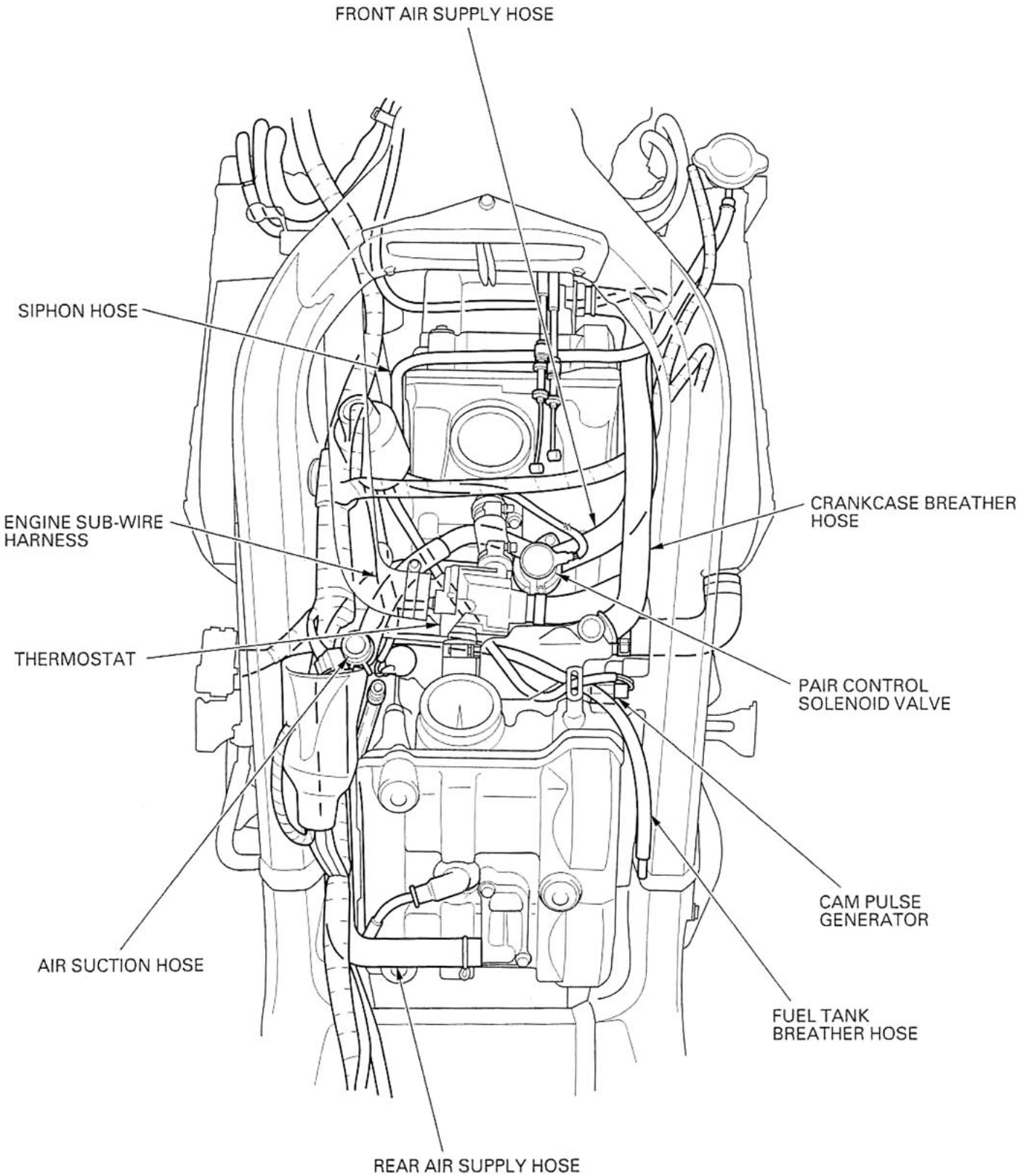
FRONT AIR SUPPLY HOSE
SIPHON HOSE
ENGINE SUB-WIRE HARNESS
THERMOSTAT
AIR SUCTION HOSE
CRANKCASE BREATHER HOSE
PAIR CONTROL SOLENOID VALVE
CAM PULSE GENERATOR
FUEL TANK BREATHER HOSE
REAR AIR SUPPLY HOSE

'00 – '01:

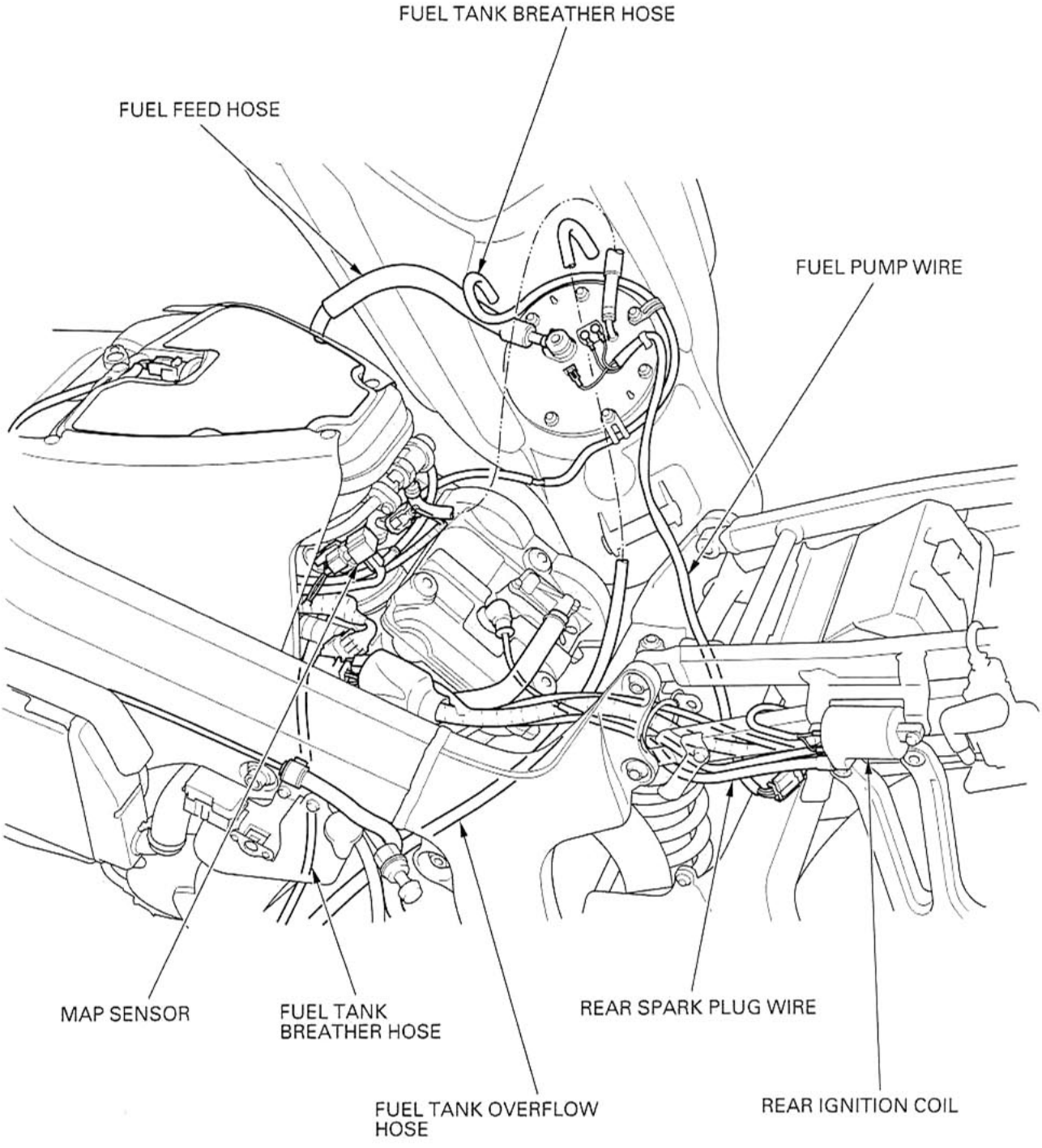
FUEL TANK BREATHER HOSE
FUEL FEED HOSE
FUEL PUMP WIRE
MAP SENSOR
FUEL TANK BREATHER HOSE
REAR SPARK PLUG WIRE
FUEL TANK OVERFLOW HOSE
REAR IGNITION COIL

'00 – '01:

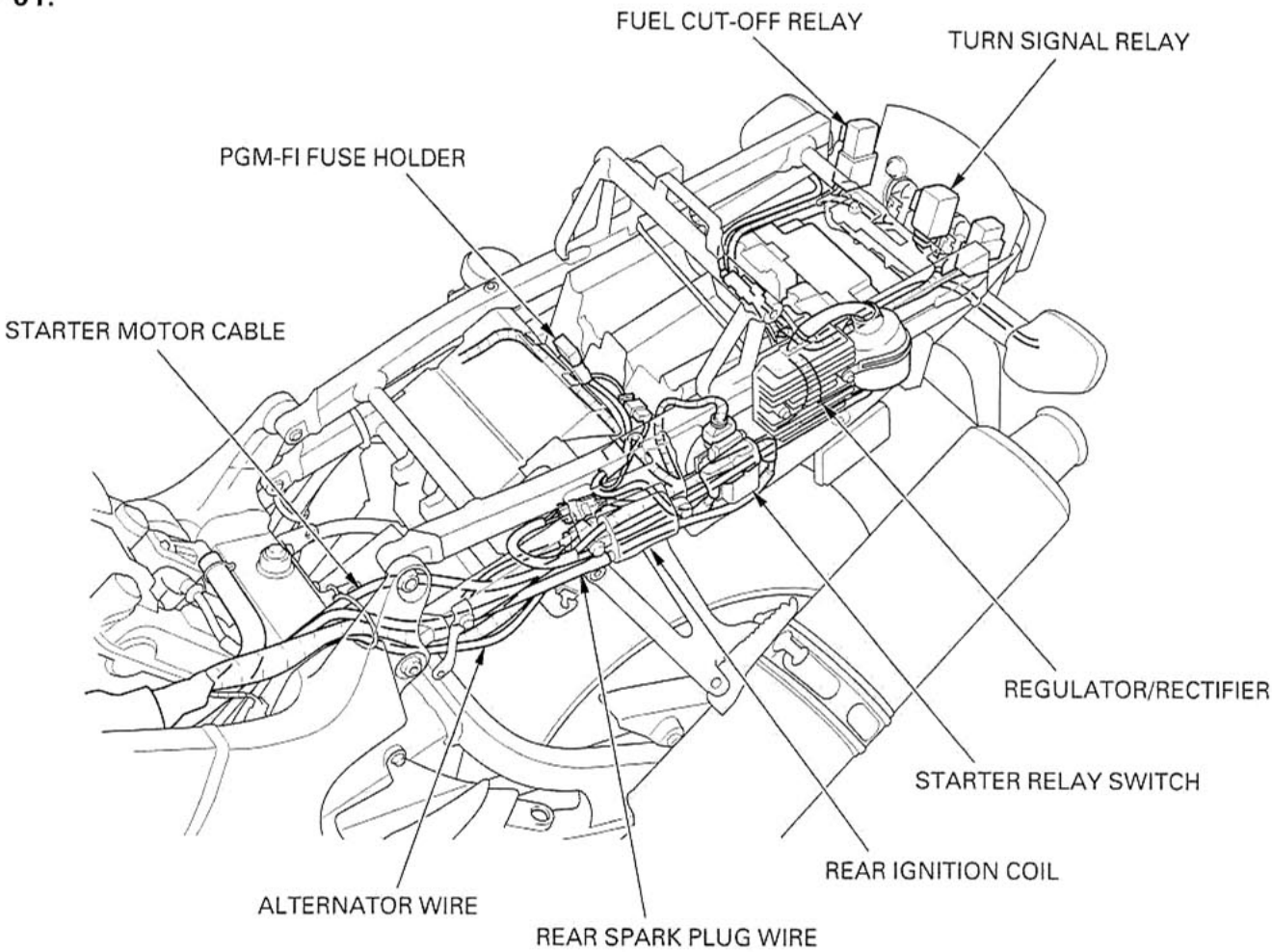
FUEL CUT-OFF RELAY
TURN SIGNAL RELAY
PGM-FI FUSE HOLDER
STARTER MOTOR CABLE
REGULATOR/RECTIFIER
STARTER RELAY SWITCH
REAR IGNITION COIL
ALTERNATOR WIRE
REAR SPARK PLUG WIRE

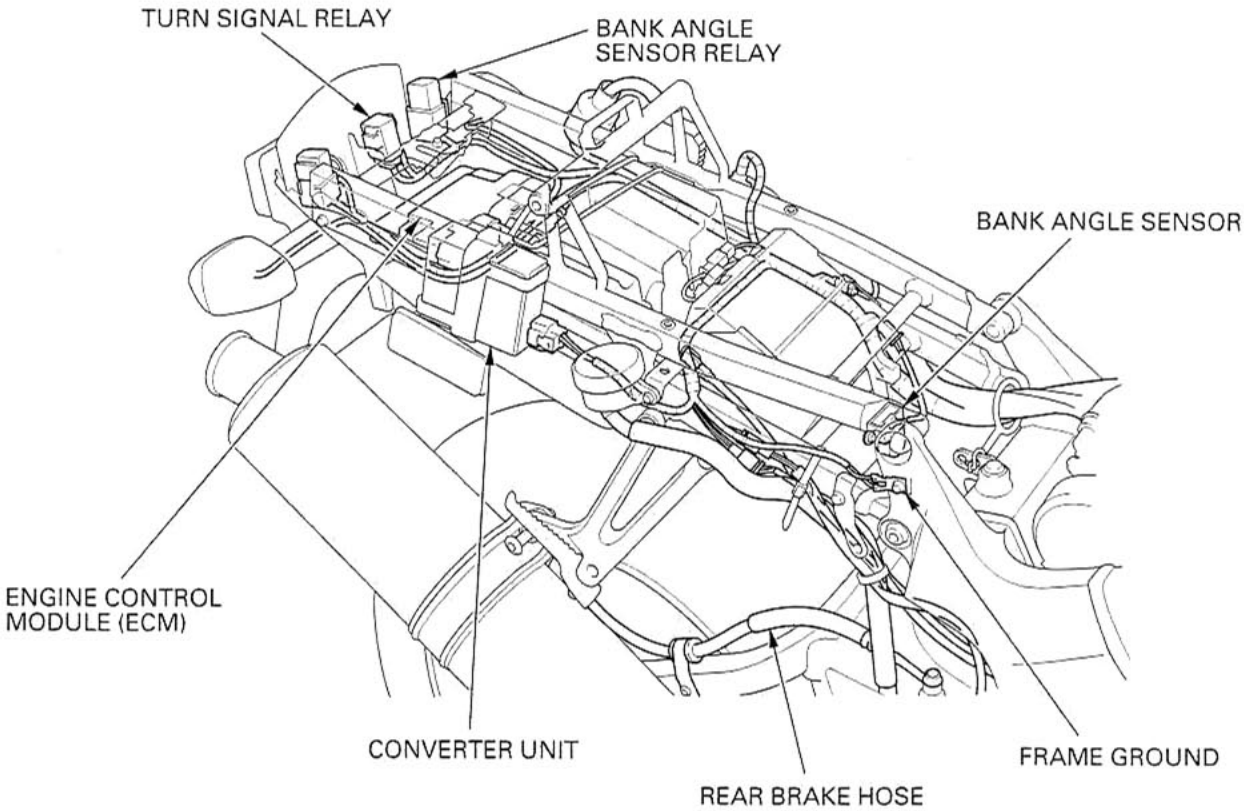
TURN SIGNAL RELAY
BANK ANGLE SENSOR RELAY
BANK ANGLE SENSOR
ENGINE CONTROL MODULE (ECM)
CONVERTER UNIT
FRAME GROUND
REAR BRAKE HOSE

After '01:

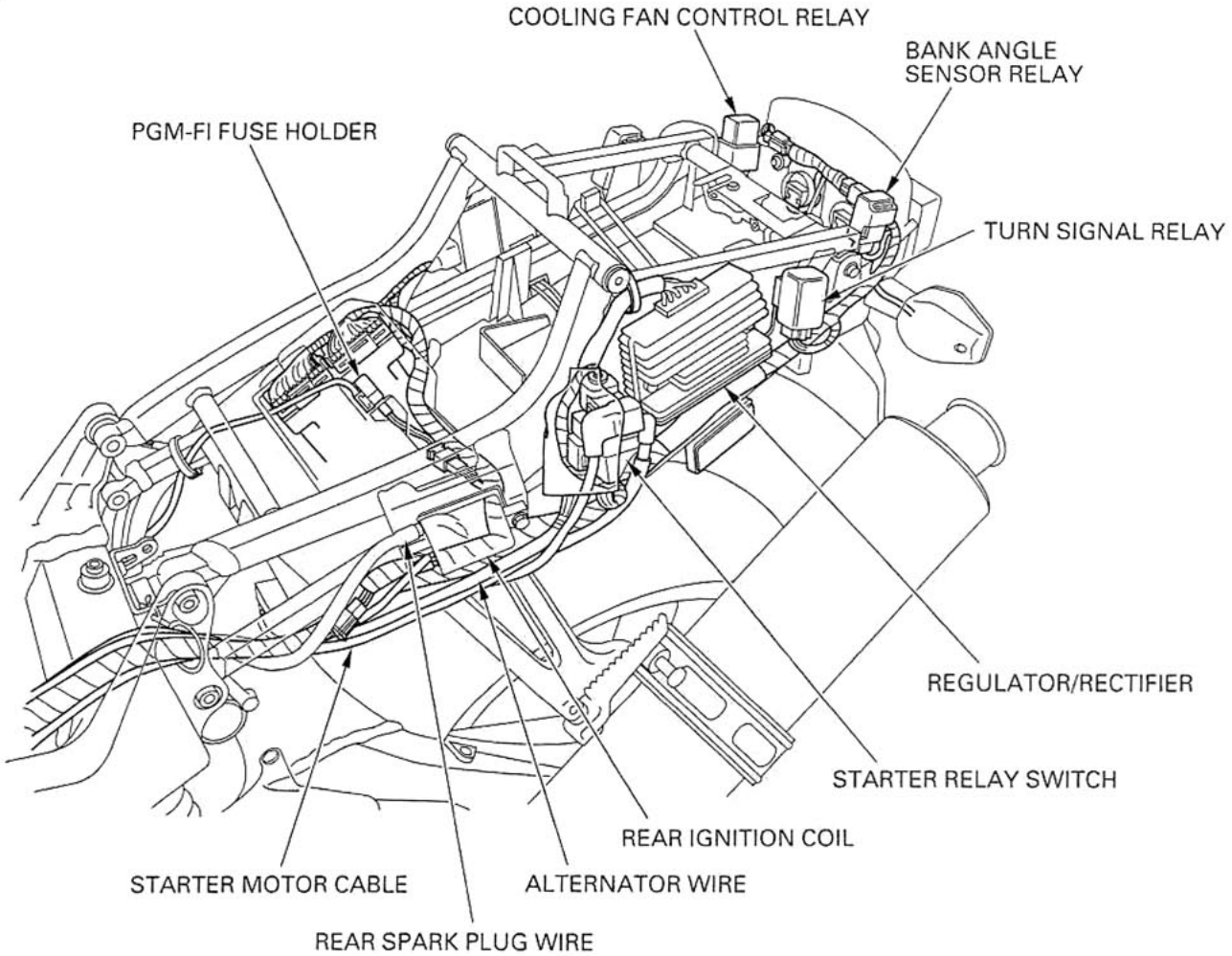
COOLING FAN CONTROL RELAY
BANK ANGLE SENSOR RELAY
PGM-FI FUSE HOLDER
TURN SIGNAL RELAY
REGULATOR/RECTIFIER
STARTER RELAY SWITCH
REAR IGNITION COIL
STARTER MOTOR CABLE
ALTERNATOR WIRE
REAR SPARK PLUG WIRE

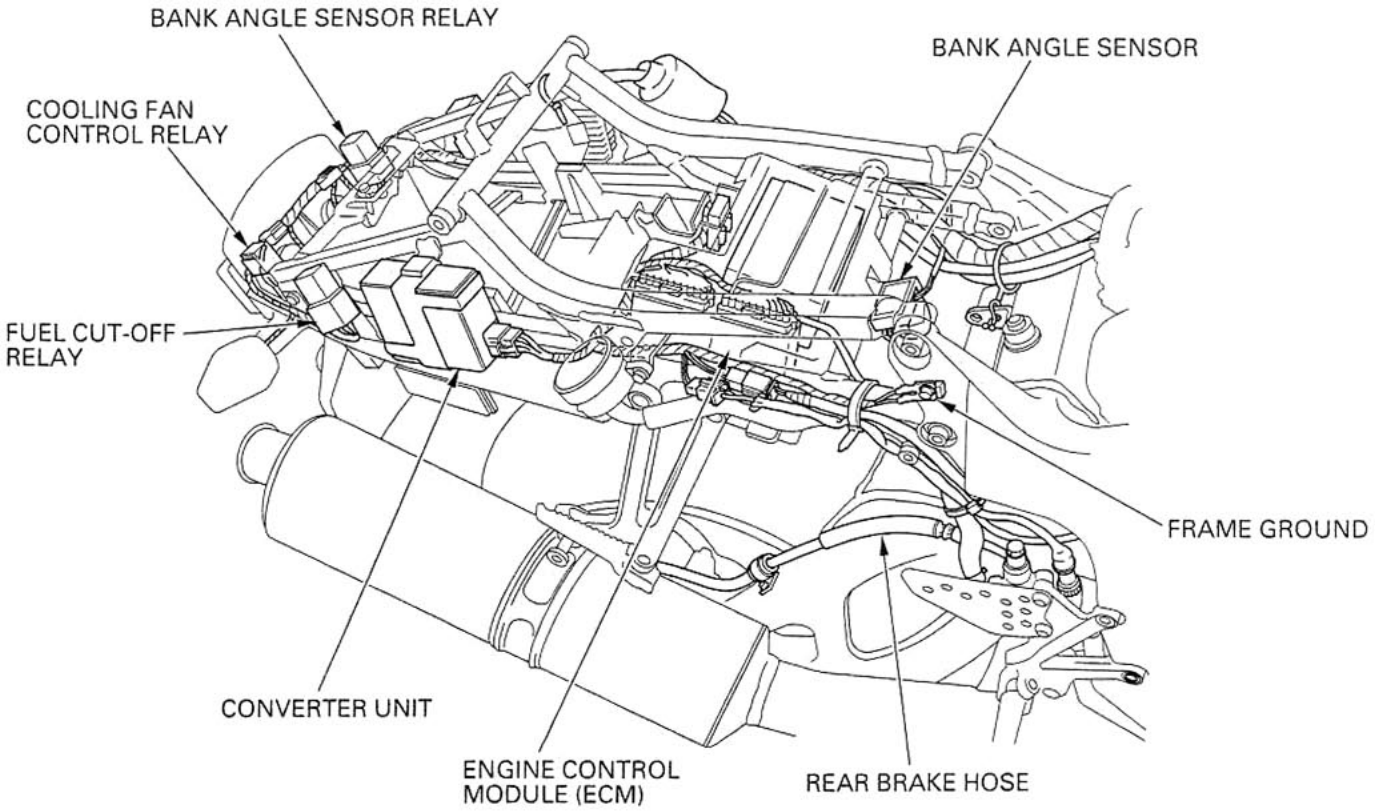
BANK ANGLE SENSOR RELAY
BANK ANGLE SENSOR
COOLING FAN CONTROL RELAY
FUEL CUT-OFF RELAY
FRAME GROUND
CONVERTER UNIT
ENGINE CONTROL MODULE (ECM)
REAR BRAKE HOSE

After '01:

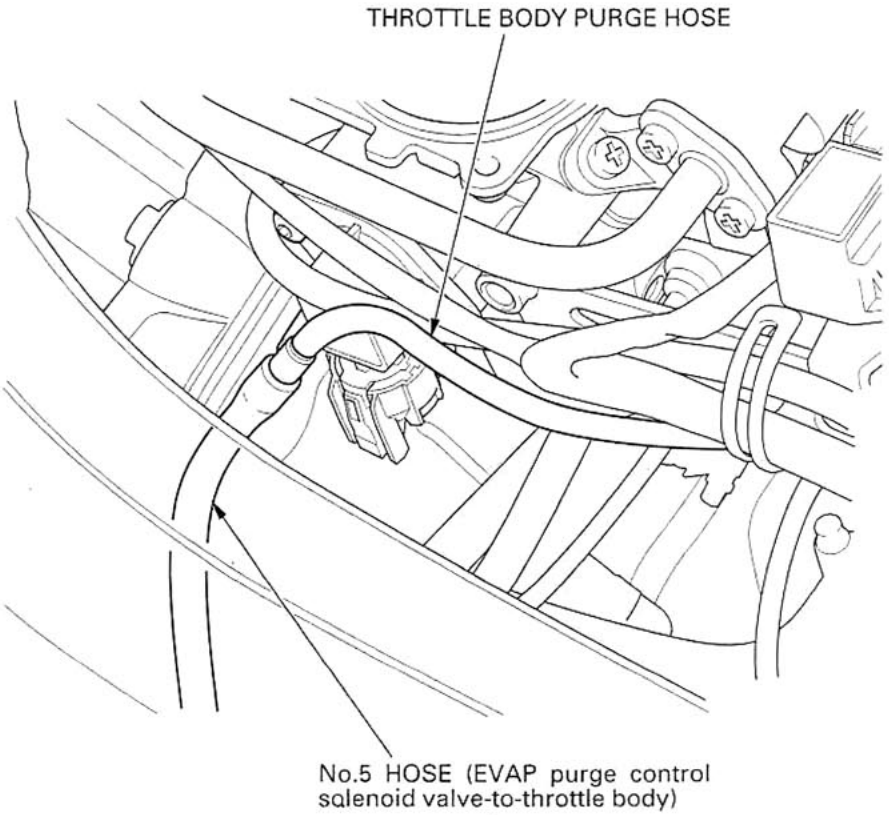
THROTTLE BODY PURGE HOSE
No.5 HOSE (EVAP purge control solenoid valve-to-throttle body)

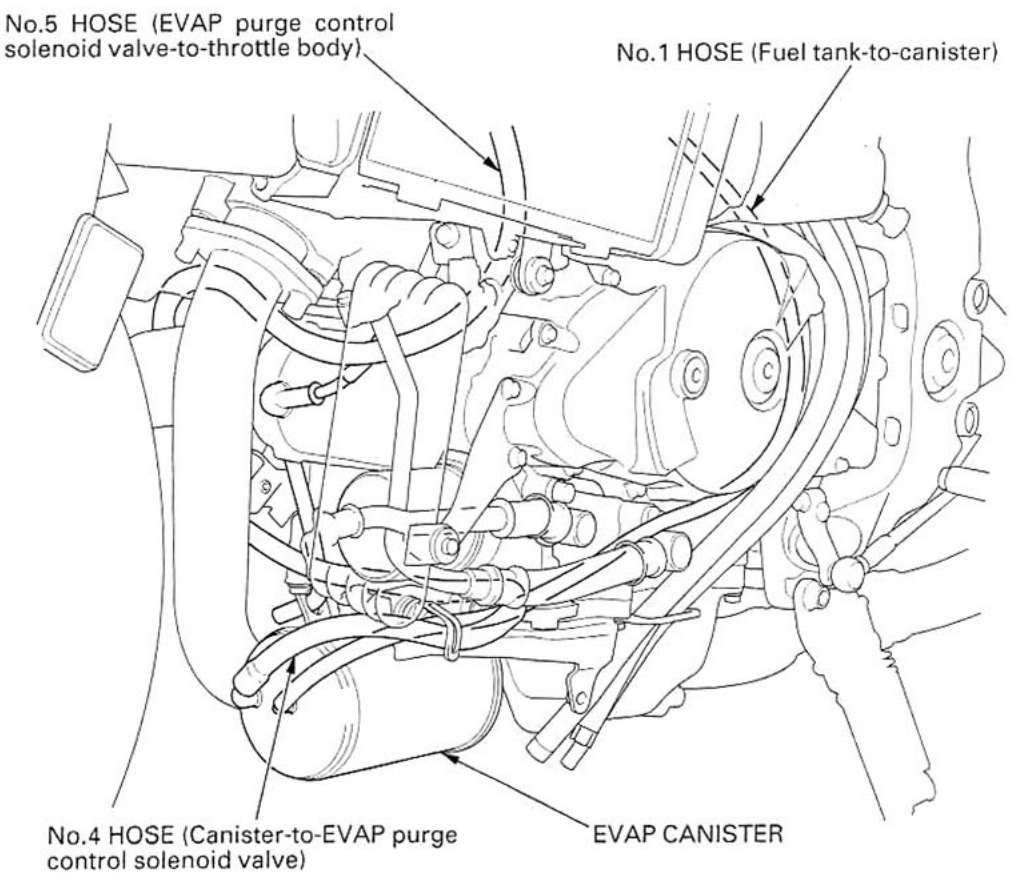
No.5 HOSE (EVAP purge control solenoid valve-to-throttle body)
No.1 HOSE (Fuel tank-to-canister)
No.4 HOSE (Canister-to-EVAP purge control solenoid valve)
EVAP CANISTER

California type only
'00 – '01:

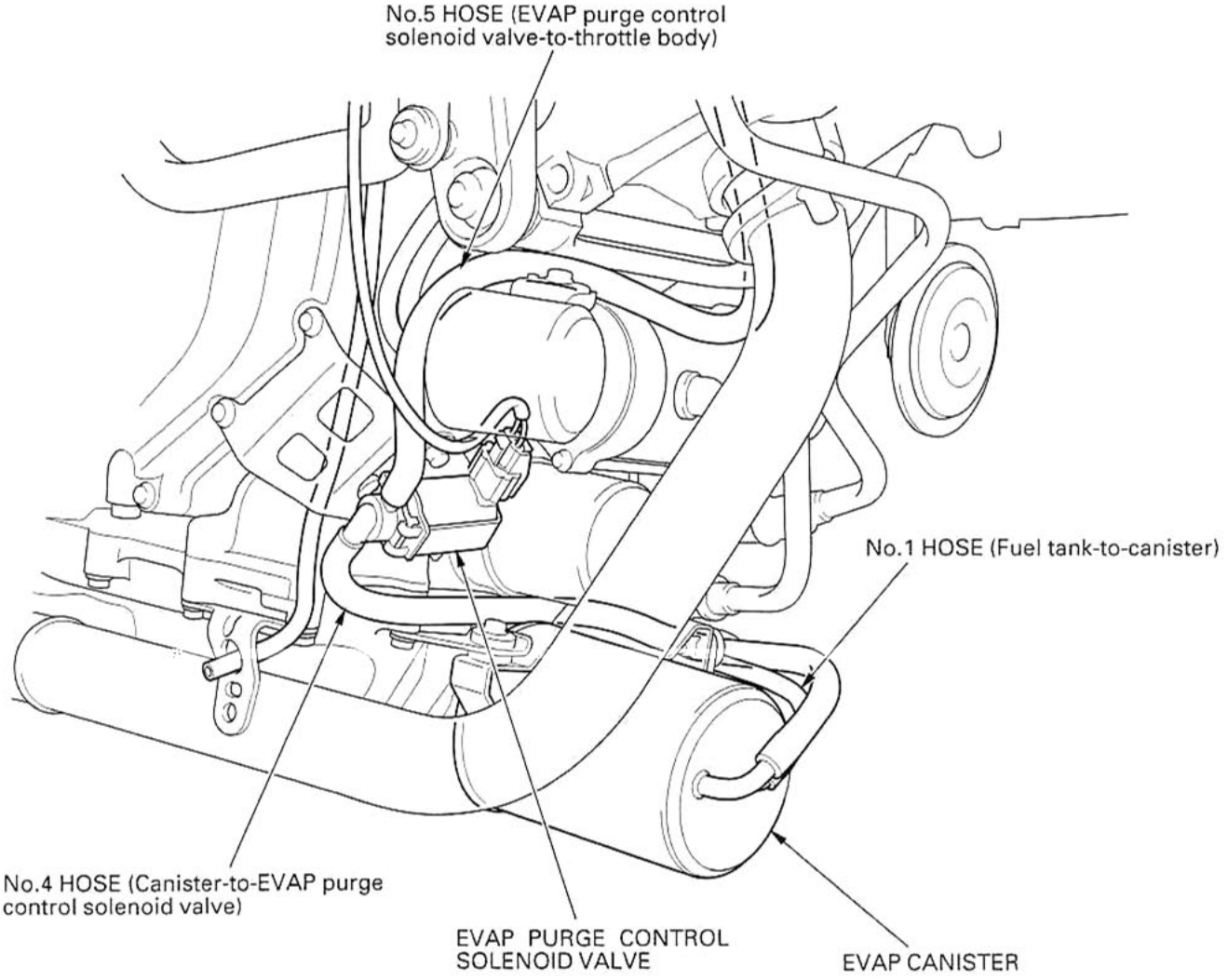

After '01:

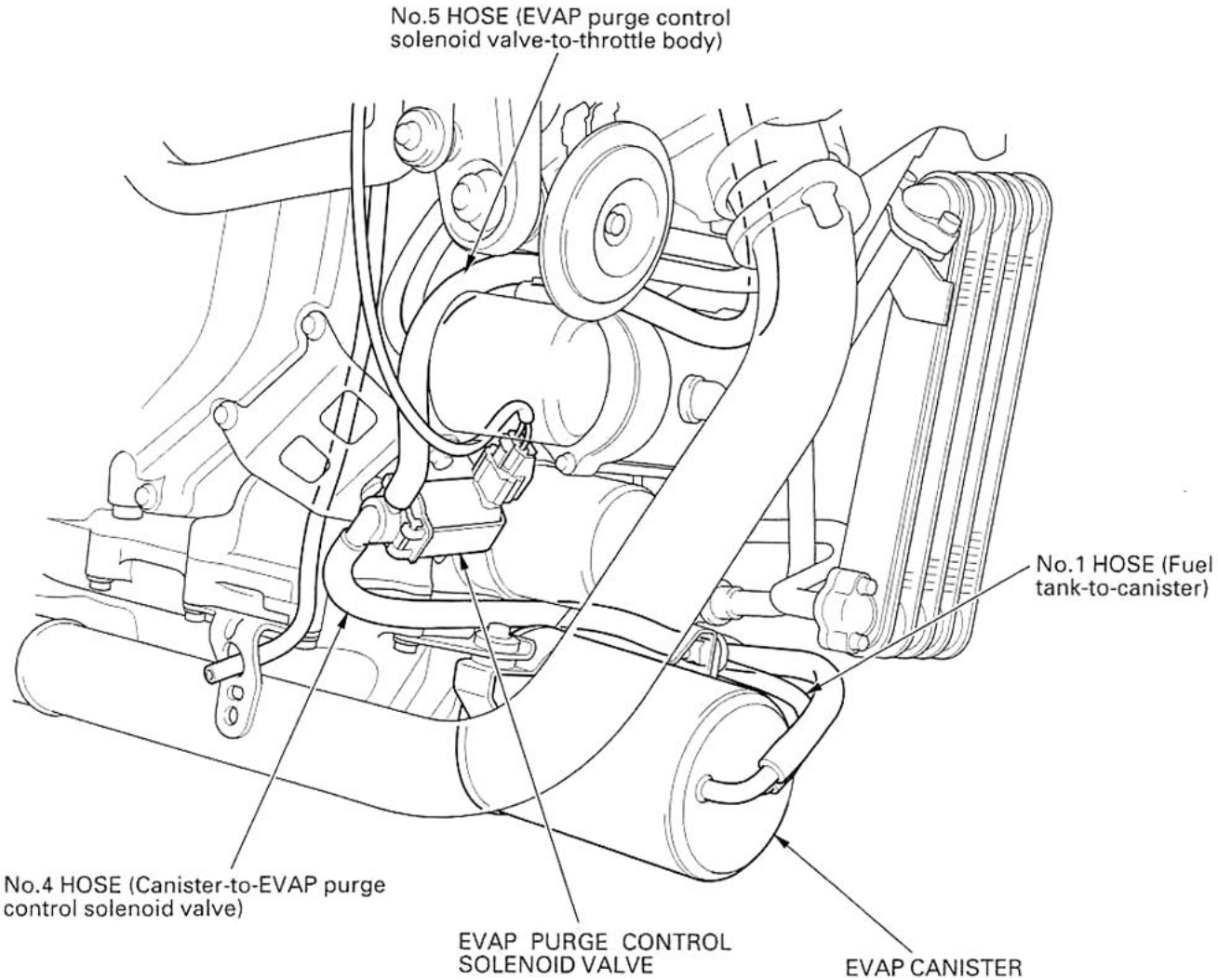
No.5 HOSE (EVAP purge control solenoid valve-to-throttle body)
No.1 HOSE (Fuel tank-to-canister)
No.4 HOSE (Canister-to-EVAP purge control solenoid valve)
EVAP PURGE CONTROL SOLENOID VALVE
EVAP CANISTER

EMISSION CONTROL SYSTEMS

The U.S. Environmental Protection Agency, Transport Canada and California Air Resources Board (CARB) require manufacturers to certify that their motorcycles comply with applicable exhaust emissions standards during their useful life, when operated and maintained according to the instructions provided, and that motorcycles built after January 1, 1983 comply with applicable noise emission standards for one year or 6,000 km (3,730 miles) after the time of sale to the ultimate purchaser, when operated and maintained according to the instructions provided. Compliance with the terms of the Distributor's Limited Warranty for Honda Motorcycle Emission Control Systems is necessary in order to keep the emissions system warranty in effect.

SOURCE OF EMISSIONS

The combustion process produces carbon monoxide, oxides of nitrogen and hydrocarbons. Control of oxides of nitrogen and hydrocarbons is very important because, under certain conditions, they react to form photochemical smog when subjected to sunlight. Carbon monoxide does not react in the same way, but it is toxic.

Honda Motor Co., Ltd. utilizes PGM-FI as well as pulse secondary air injection (PAIR) system, to reduce carbon monoxide and hydrocarbons.

CRANKCASE EMISSION CONTROL SYSTEM

The engine is equipped with a closed crankcase system to prevent discharging crankcase emissions into the atmosphere. Blow-by gas is returned to the combustion chamber through the air cleaner and throttle body.

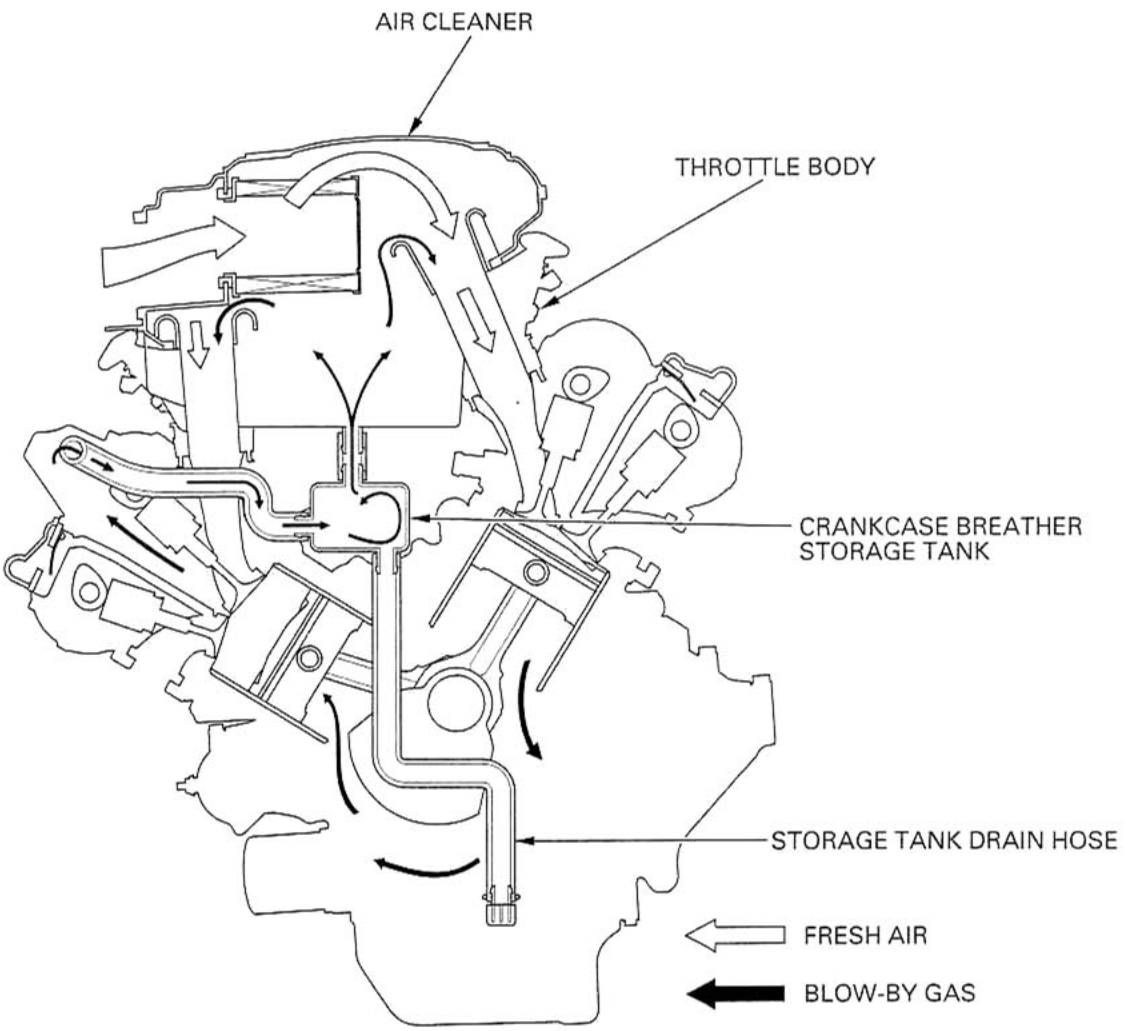

EXHAUST EMISSION CONTROL SYSTEM (PULSE SECONDARY AIR INJECTION SYSTEM)

The exhaust emission control system consists of a secondary air supply system which introduces filtered air into the exhaust gases in the exhaust port. Fresh air is drawn into the exhaust port whenever there is a negative pressure pulse in the exhaust system. This charge of fresh air promotes burning of the unburned exhaust gases and changes a considerable amount of hydrocarbons and carbon monoxide into relatively harmless carbon dioxide and water vapor.
This model has the pulse secondary air injection (PAIR) check valves and the PAIR control solenoid valve which is controlled by the engine control module (ECM). PAIR check valve prevents reverse air flow through the system. The ECM signals the PAIR control solenoid valve in accordance with the running conditions (engine coolant temperature, intake air temperature, throttle position, manifold absolute pressure and engine revolution), which then cuts off the supply of fresh air.

No adjustment to the pulse secondary air injection system should be made: although, periodic inspection of the components is recommended.

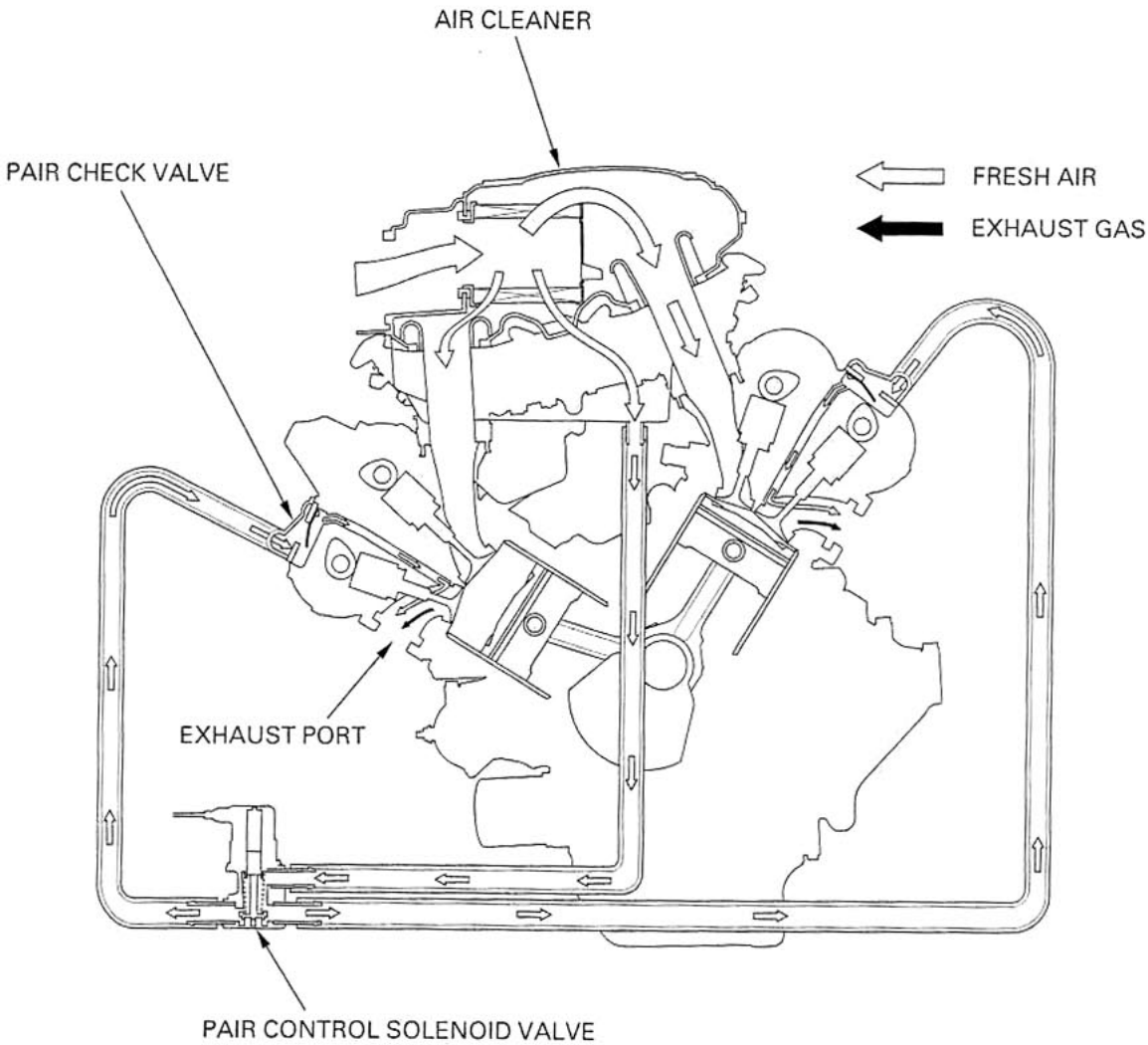

EVAPORATIVE EMISSION CONTROL SYSTEM (California type only)

This model complies with CARB evaporative emission requirements.

Fuel vapor from the fuel tank is routed into the evaporative emission (EVAP) canister where it is adsorbed and stored while the engine is stopped. When the engine is running and the EVAP purge control valve is open, fuel vapor in the EVAP canister is drawn into the engine through the throttle body.

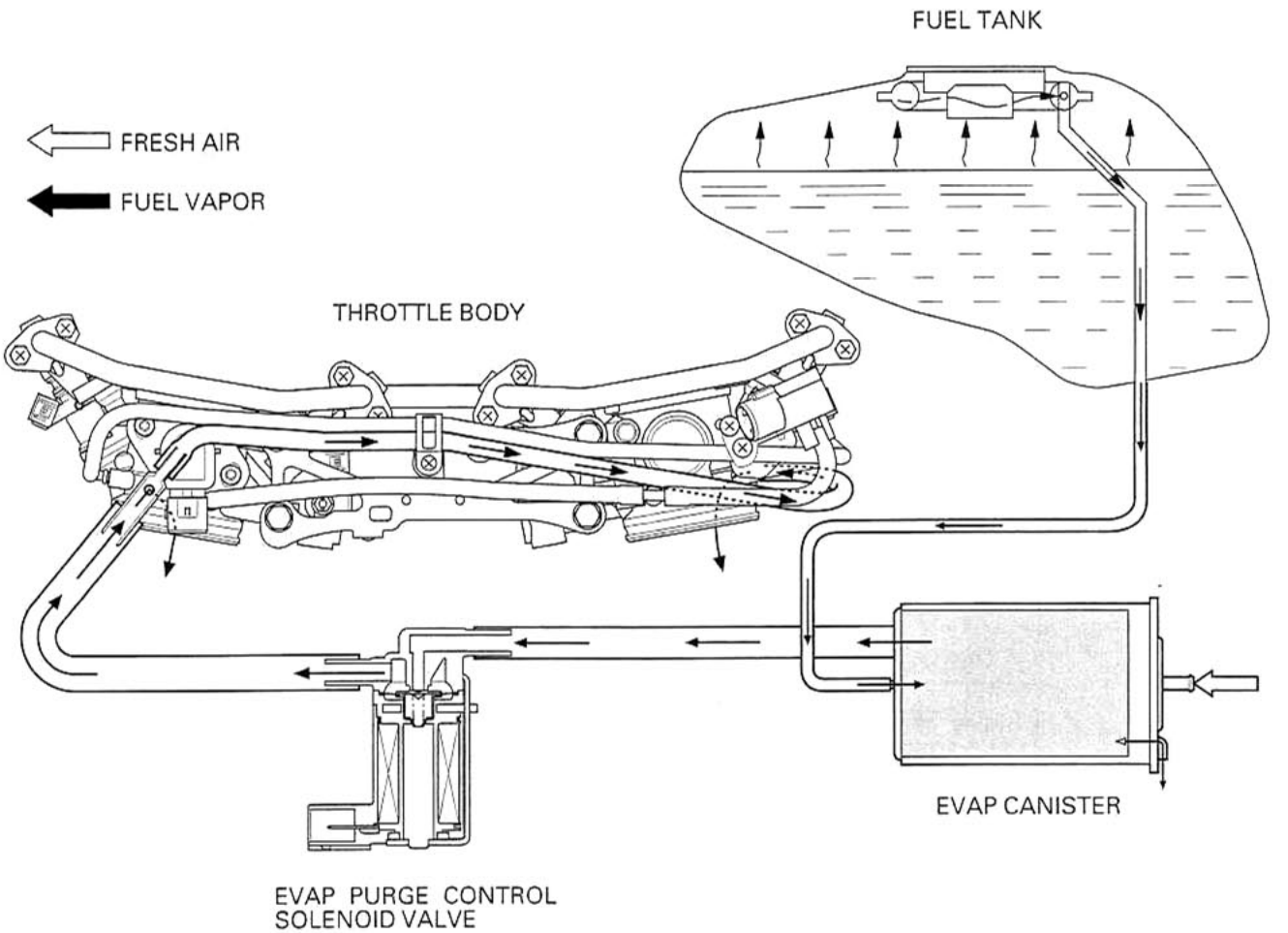

NOISE EMISSION CONTROL SYSTEM

TAMPERING WITH THE NOISE CONTROL SYSTEM IS PROHIBITED: U.S. federal law prohibits or Canadian provincial law may prohibit the following acts or the causing thereof: (1) The removal or rendering inoperative by any person, other than for purposes of maintenance, repair or replacement, of any device or element of design incorporated into any new vehicle for the purpose of noise control prior to its sale or delivery to the ultimate purchaser or while it is in use; (2) the use of the vehicle after such device or element of design has been removed or rendered inoperative by any person.

AMONG THOSE ACTS PRESUMED TO CONSTITUTE TAMPERING ARE THE ACTS LISTED BELOW:

1. Removal of or puncturing of the muffler, baffles, header pipes or any other component which conduct exhaust gases.
2. Removal of, or puncturing of any part of the intake system.
3. Lack of proper maintenance.
4. Replacing any moving parts of the vehicle, or parts of the exhaust or intake system, with parts other than those specified by the manufacturer.

EMISSION CONTROL INFORMATION LABELS

An Emission Control Information Label is located on the left side of the frame near the steering head as shown.
It gives base tune-up specifications.

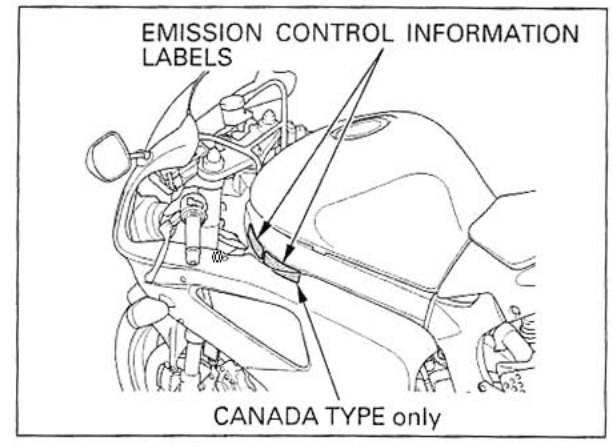

VACUUM HOSE ROUTING DIAGRAM LABEL (California Type Only)

The Vacuum Hose Routing Diagram Label is located on the left side of the air cleaner housing as shown. The fuel tank must be raised to read it (page 3-4).

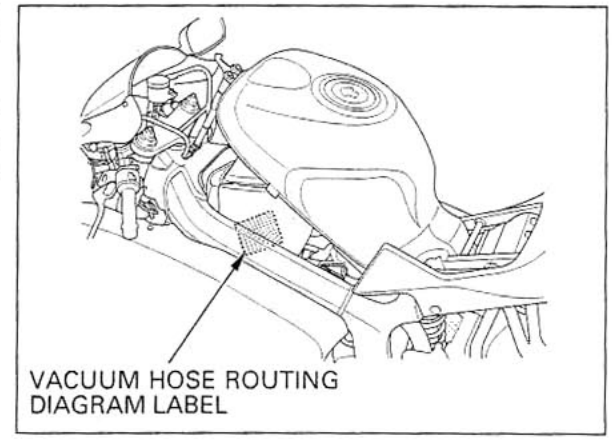

'00–'01:

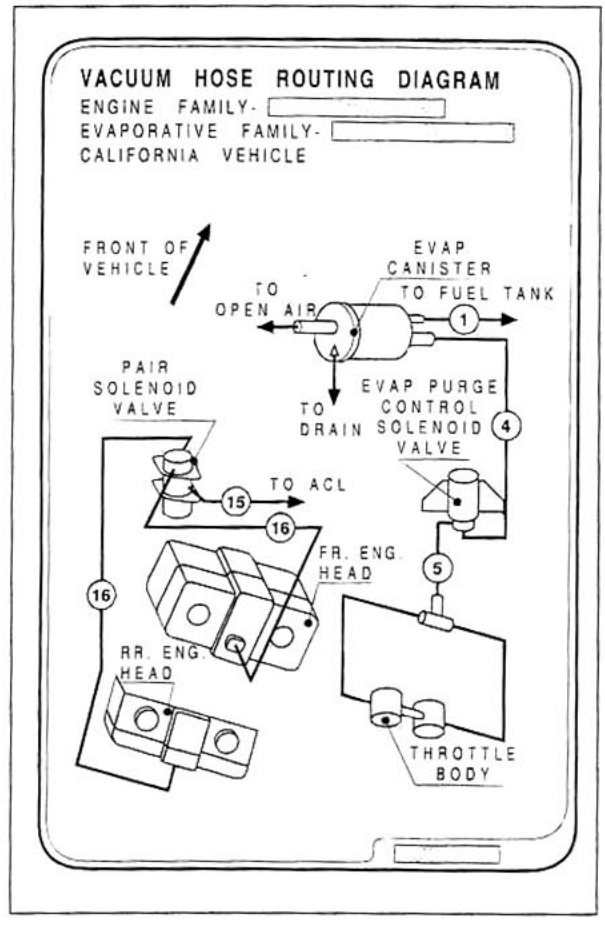

After '01:

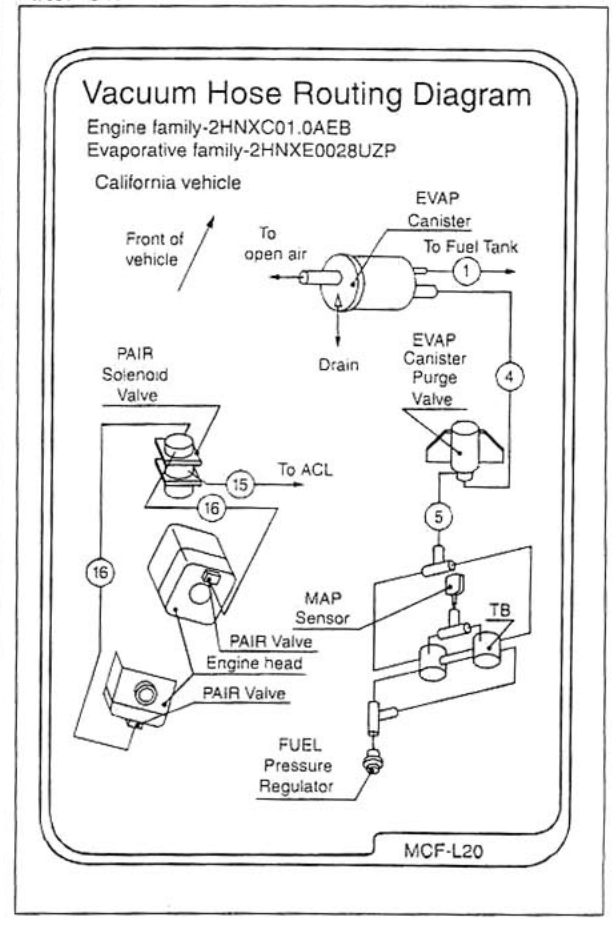

2. FRAME/BODY PANELS/EXHAUST SYSTEM

SERVICE INFORMATION

GENERAL

- This section covers removal and installation of the body panels, exhaust system and seat rail.
- Always replace the exhaust pipe gasket when removing the exhaust pipe from the engine.
- Always inspect the exhaust system for leaks after installation.

TORQUE VALUES

Lower fairing-to-upper fairing bolt	'00–'01: 2 N·m (0.2 kgf·m , 1.4 lbf·ft)
	After '01: 1.5 N·m (0.15 kgf·m , 1.1 lbf·ft)
Lower inner fairing-to-lower fairing bolt	'00–'01: 2 N·m (0.2 kgf·m , 1.4 lbf·ft)
	After '01: 1.5 N·m (0.15 kgf·m , 1.1 lbf·ft)
Exhaust pipe joint nut	12 N·m (1.2 kgf·m , 9 lbf·ft)
Muffler band bolt	26 N·m (2.7 kgf·m , 20 lbf·ft)
Seat rail mounting bolt	44 N·m (4.5 kgf·m , 33 lbf·ft)
Passenger footpeg holder bolt	26 N·m (2.7 kgf·m , 20 lbf·ft)
Rear brake reservoir mounting bolt	9 N·m (0.9 kgf·m , 6.5 lbf·ft)
Windscreen attaching bolt	'00–'01: 2 N·m (0.2 kgf·m , 1.4 lbf·ft)
Windscreen attaching screw	After '01: 0.4 N·m (0.04 kgf·m , 0.3 lbf·ft)

TROUBLESHOOTING

Excessive exhaust noise
- Broken exhaust system
- Exhaust gas leaks

Poor performance
- Deformed exhaust system
- Exhaust gas leaks
- Clogged muffler

SEAT

RIDER SEAT

Remove the two mounting bolts and collars.
Raise the rear of the seat, being careful not to damage the seat cowl, and remove the seat rearward.

Install the seat while hooking the prongs under the cross pipe as shown.
Set the seat mounting stays with the collars, and install and tighten the mounting bolts.

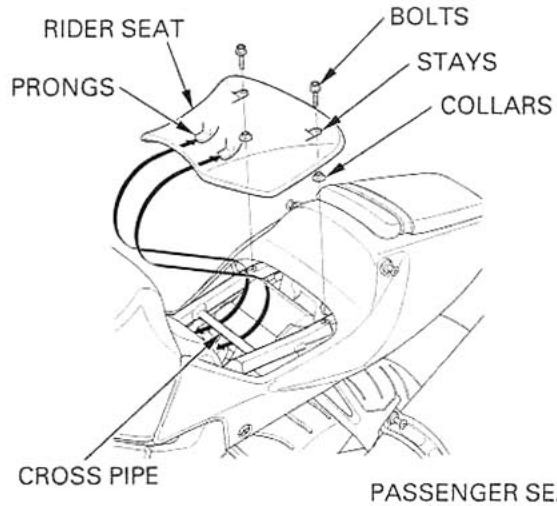

PASSENGER SEAT

Unlock the seat with the ignition key.
Raise the rear of the seat and remove the seat rearward.

Install the seat while hooking the prongs to the cross pipe as shown.
Push the seat down to lock it.

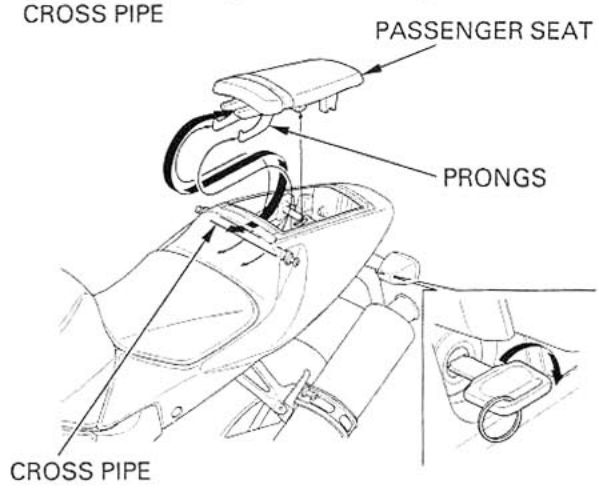

SEAT COWL

Remove the rider and passenger seats.

Remove the two trim clips as follows:
– Push the center pin in.
– Pull the clip out.
Remove the two screws, mounting bolts, collars and special washers.
Slightly move the seat cowl rearward.
Spread the center of the seat cowl, being careful not to damage the cowl, and remove it.

Before installing the trim clip, pull the center pin out while pressing the clip prongs.
Install the seat cowl in the reverse order of removal.

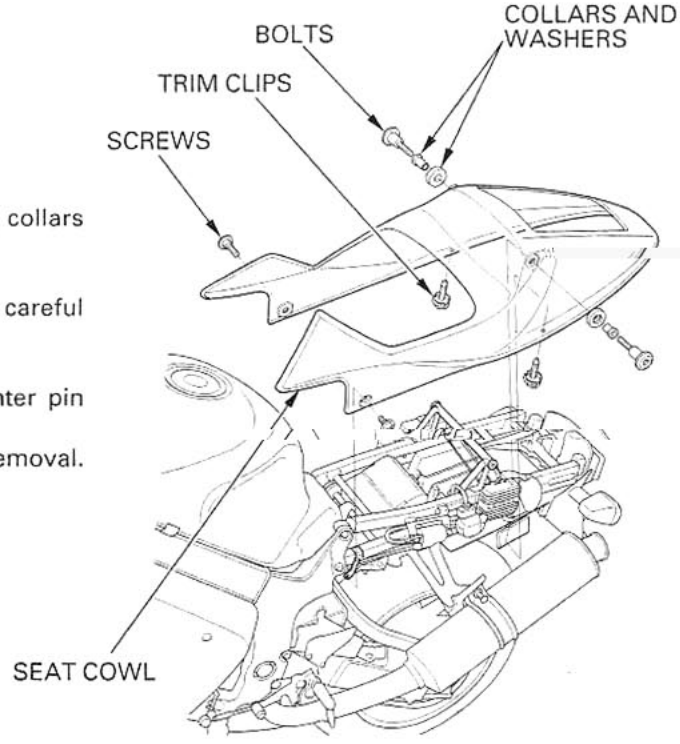

LOWER INNER FAIRING

Disconnect the turn signal wire connectors.
Remove the two lower inner fairing-to-lower fairing bolts.
Remove the eight (After '01: six) trim clips as follows:
– Pull the center pin out.
– Pull the clip out.
Remove the lower inner fairing.

Set the lower inner fairing while routing the turn signal wires into the holes in the inner fairing and install the eight (After '01: six) trim clips.
Install and tighten the two bolts.

TORQUE: '00 – '01: 2 N·m (0.2 kgf·m , 1.4 lbf·ft)
After '01: 1.5 N·m (0.15 kgf·m , 1.1 lbf·ft)

'00 – '01: Connect the turn signal wire connectors.

'00 – '01:

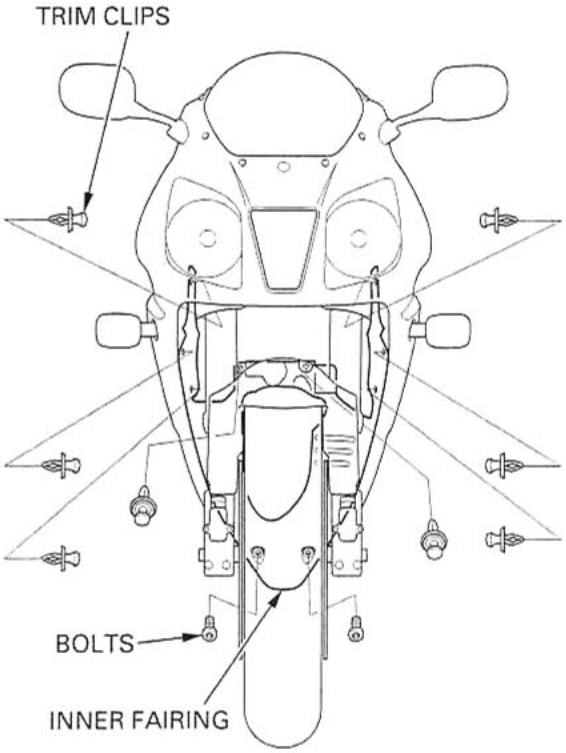

After '01:

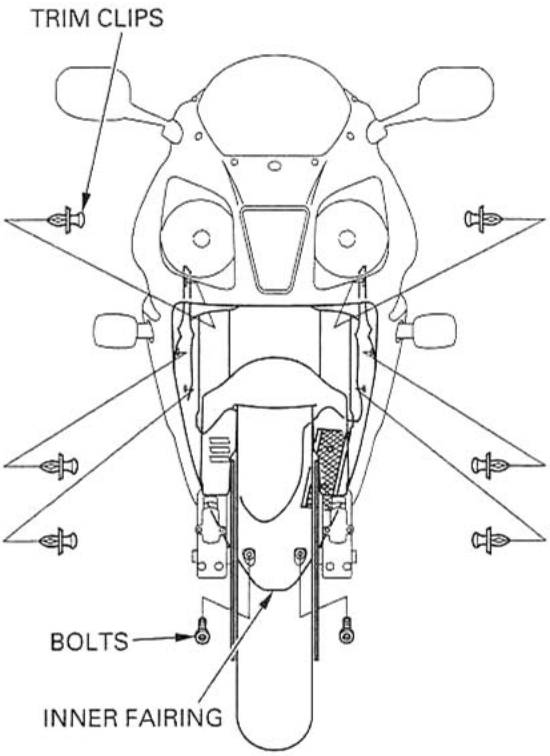

LOWER FAIRING

Remove the trim clip attaching the inner fairing.
Remove the four trim clips as follows:
– Loosen the center pin.
– Pull the clip out.
Remove the three lower fairing-to-upper fairing bolts.
Remove the lower inner fairing-to-lower fairing bolt.
Remove the two setting bolts.
Remove the special screw and the lower fairing.

Install the lower fairing and set the special screw.
Install and tighten the two setting bolts.
Install and tighten the fairing-to-fairing bolts.

TORQUE: '00 – '01: 2 N·m (0.2 kgf·m , 1.4 lbf·ft)
After '01: 1.5 N·m (0.15 kgf·m , 1.1 lbf·ft)

Install the trim clips.

LEFT LOWER FAIRING:

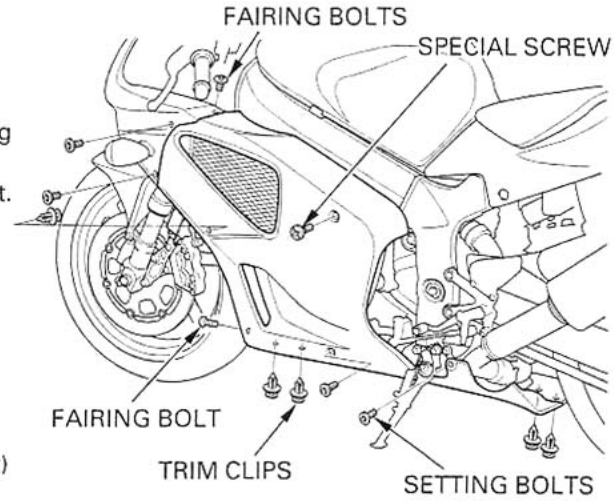

RIGHT LOWER FAIRING:

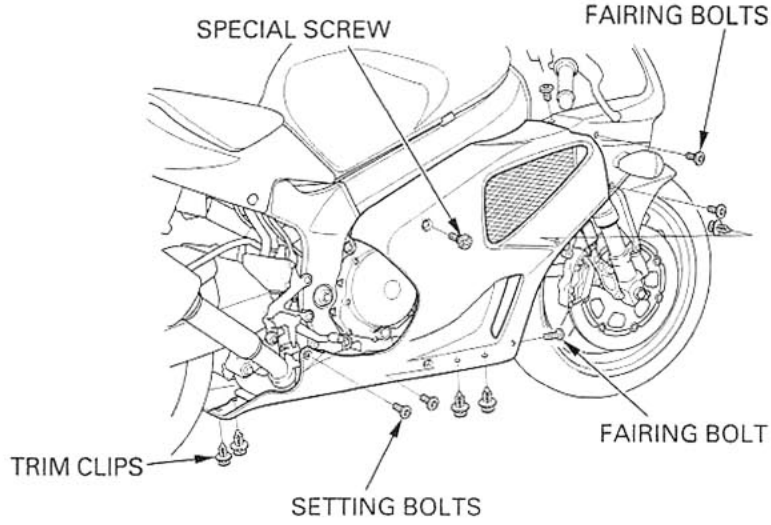

UPPER FAIRING

Remove the headlight relay from the stay of the upper inner fairing.
Disconnect the following:
– headlight connectors
– front turn signal connectors

Remove the four trim clips attaching the inner fairing.
Remove the six lower fairing-to-upper fairing bolts.
Remove the four bolts and the rear view mirrors.
Remove the setting screw and the upper fairing.

Install the upper fairing, aligning the bosses with the grommets on the stay.
Install the removed parts in the reverse order of removal.

TORQUE:
Fairing-to-fairing bolts:
'00 – '01: 2 N·m (0.2 kgf·m , 1.4 lbf·ft)
After '01: 1.5 N·m (0.15 kgf·m , 1.1 lbf·ft)

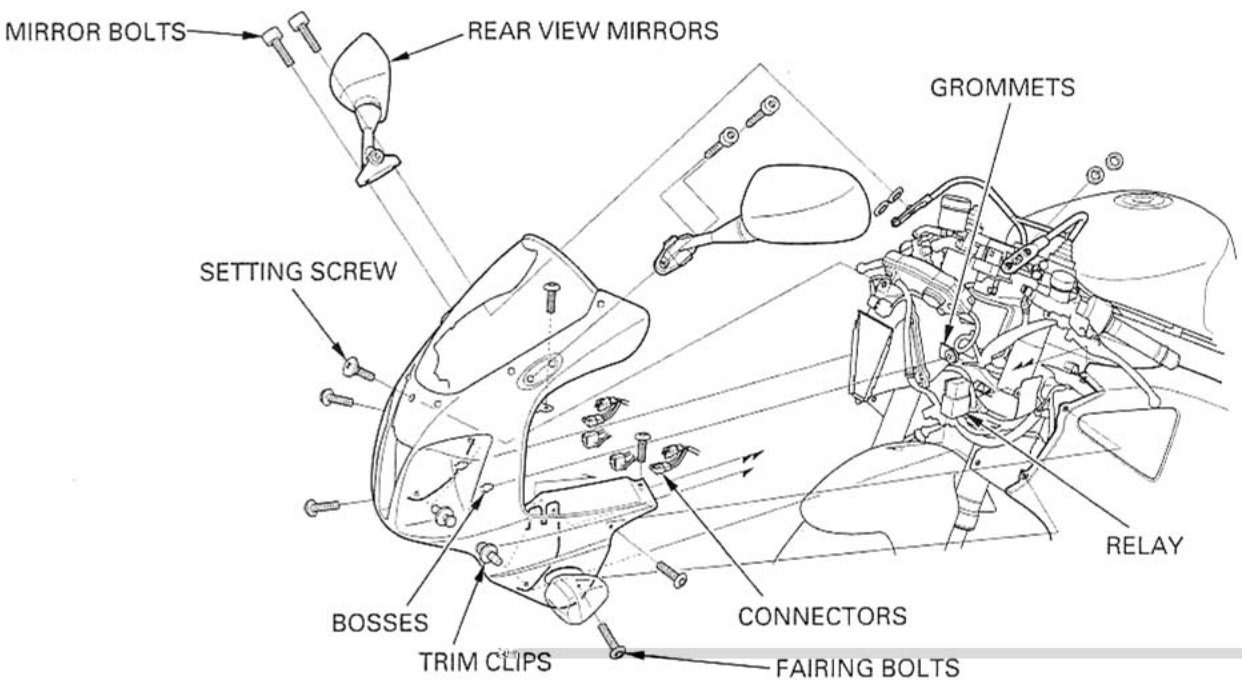

EXHAUST SYSTEM

REMOVAL

Remove the lower inner fairing and both lower fairings (page 2-3, 2-4).

Loosen the muffler band bolt.
Remove the muffler lower mounting nut, bolt and washer.

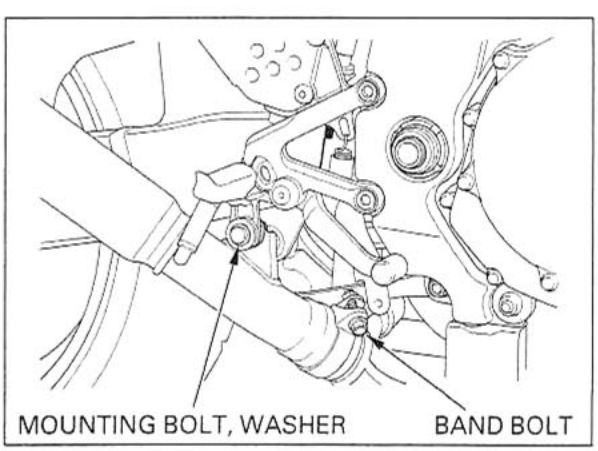

Remove the muffler upper mounting nut, bolt, washer, collar and the muffler.

Remove the other muffler if the exhaust pipes will be removed.

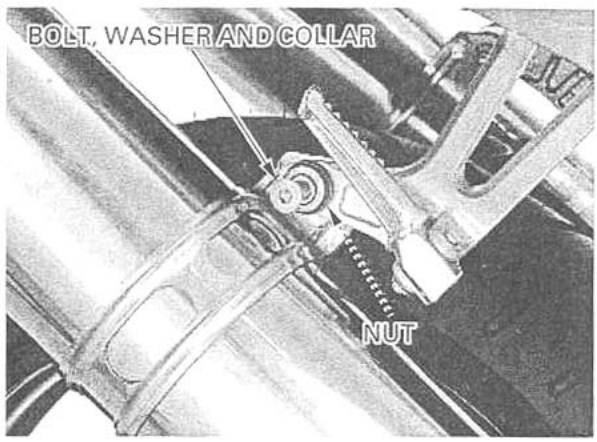

Loosen the front exhaust pipe-to-rear exhaust pipe band bolt.

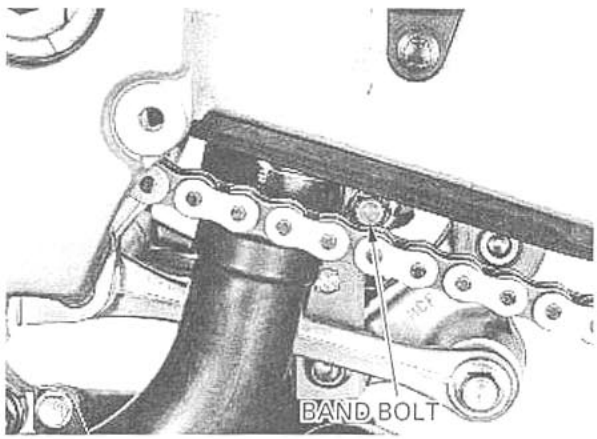

Remove the joint nuts and the front exhaust pipe.

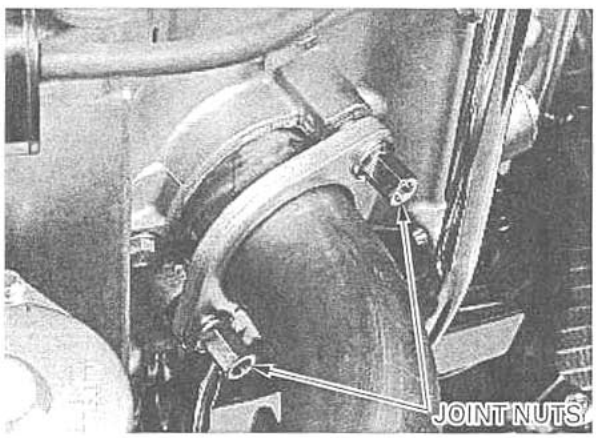

Remove the joint nuts and the rear exhaust pipe.

Remove the exhaust pipe gaskets and muffler gaskets.

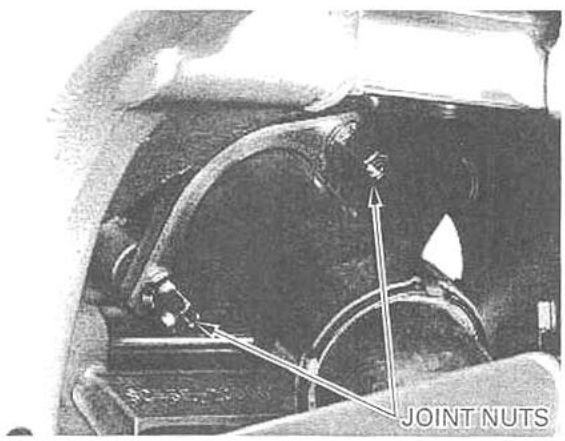

INSTALLATION

Install the rear exhaust pipe with a new gasket and temporarily tighten the joint nuts.

Install the front exhaust pipe with a new gasket and temporarily tighten the joint nuts.
Connect the front and rear exhaust pipe with a new gasket and temporarily tighten the band bolt.

Install the collar into the rider footpeg holder.

Install a new muffler gaskets into the exhaust pipe.
Install the muffler with the collar, washer, upper mounting bolt and nut.

Install the muffler lower mounting bolt with the washer and nut, and temporarily tighten the muffler band bolt and lower mounting nut.
Install another muffler.

Tighten the exhaust pipe joint nuts.

TORQUE: 12 N·m (1.2 kgf·m , 9 lbf·ft)

Tighten the front exhaust pipe-to-rear exhaust pipe band bolt and muffler band bolts.

TORQUE: 26 N·m (2.7 kgf·m , 20 lbf·ft)

Tighten the muffler upper and lower mounting nuts securely.

Install the lower fairings and lower inner fairing (page 2-3, 2-4).

'00 – '01:

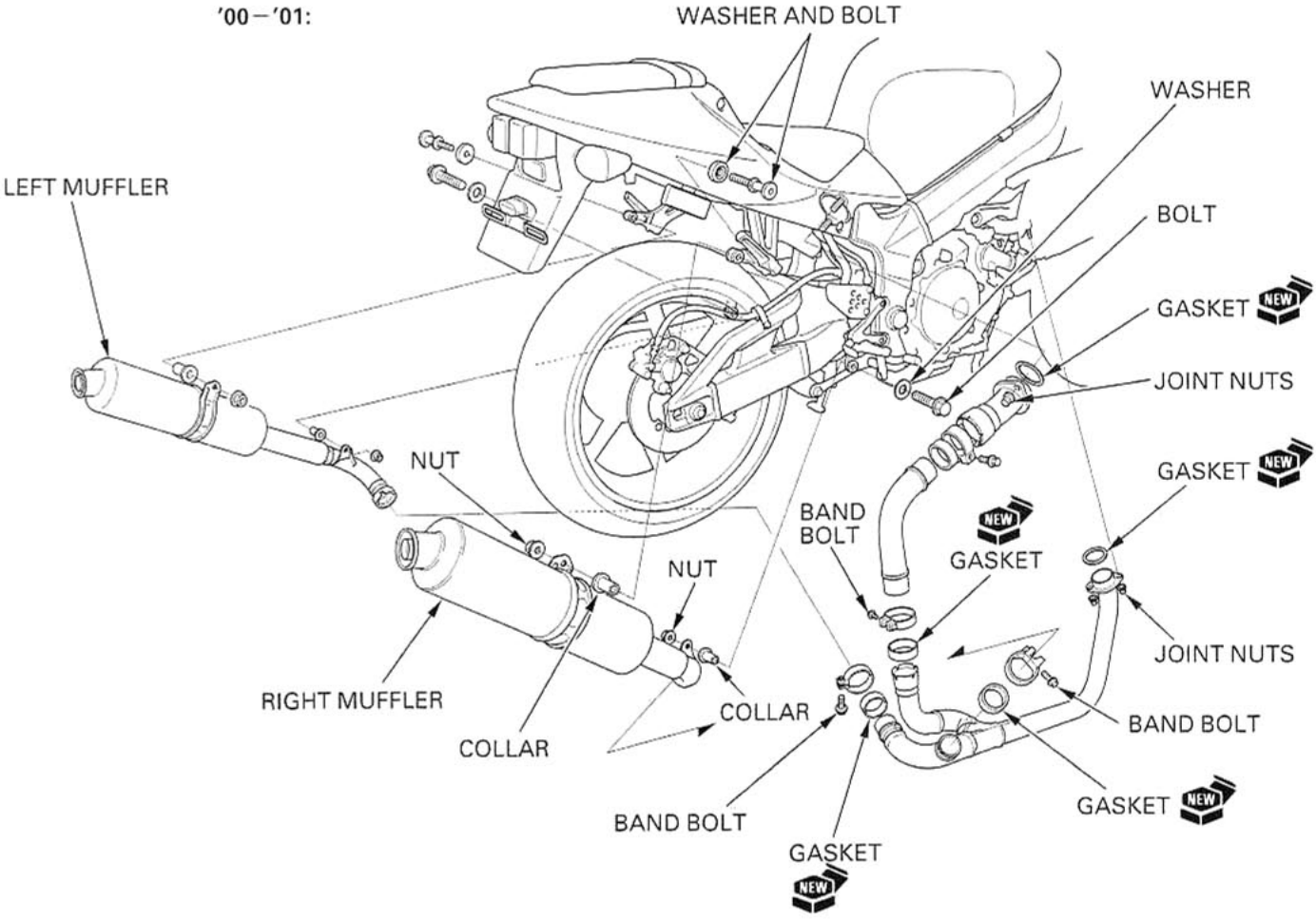

After '01:

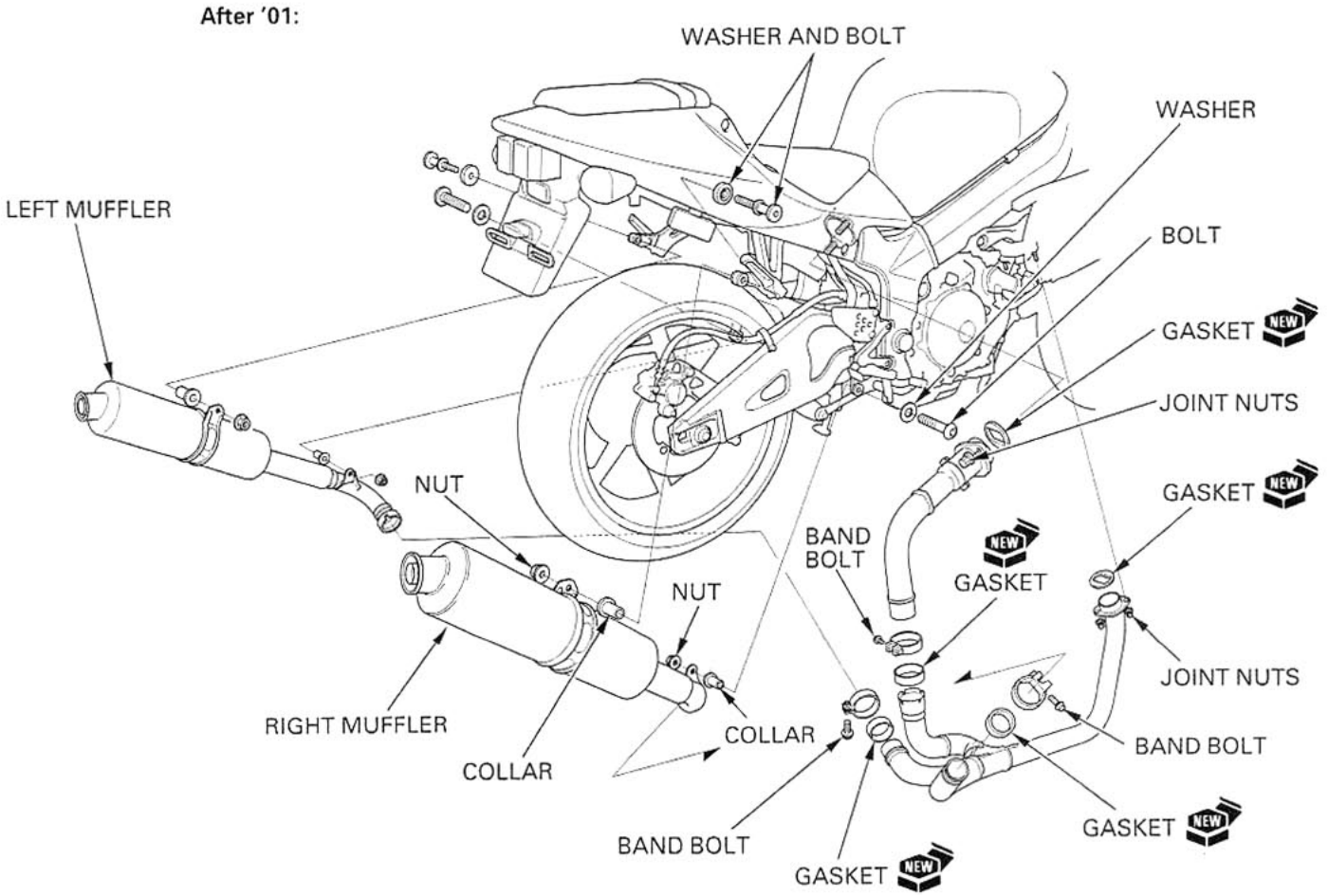
WASHER AND BOLT
WASHER
LEFT MUFFLER
BOLT
GASKET
JOINT NUTS
NUT
GASKET
BAND BOLT
GASKET
NUT
JOINT NUTS
RIGHT MUFFLER
COLLAR
BAND BOLT
COLLAR
GASKET
BAND BOLT
GASKET

REAR FENDER

Remove the following:
- seat cowl (page 2-2)
- battery (page 16-4)
- engine control module (page 17-6)
- rear turn signal lights (page 19-8)
- bank angle sensor, (After '01: fan control), turn signal and fuel cut-off relays
- brake/taillight (page 19-8)
- license light (page 19-9)

Remove the bolt, cable guard and the passenger seat lock catch.
Disconnect the bank angle sensor connector.
Remove the ('00–01: two nuts), bolts, (After '01: washers) and ('00–'01: collars).
Remove the rear fender from the seat rail.
Remove the bank angle sensor from the rear fender.

Install the rear fender and removed parts in the reverse order of removal.

'00–'01:

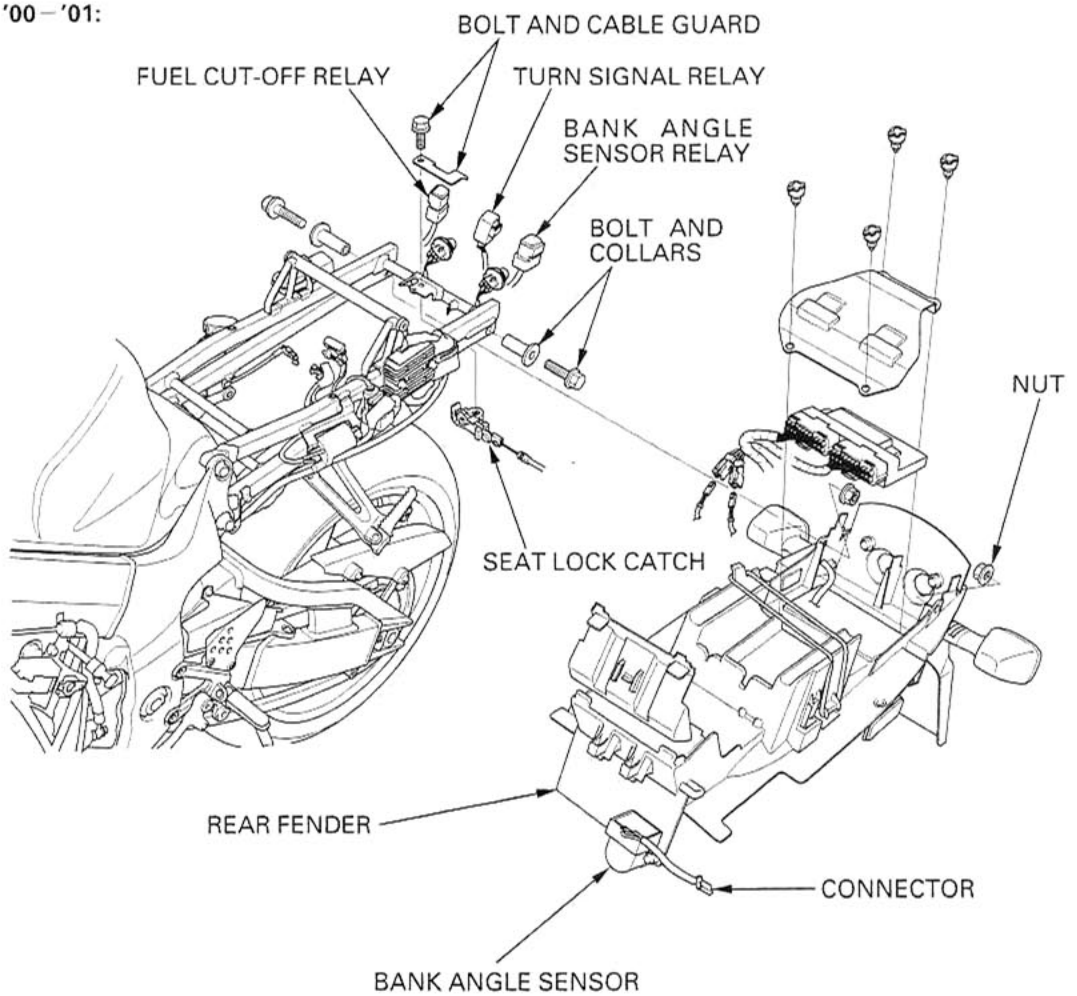

After '01:

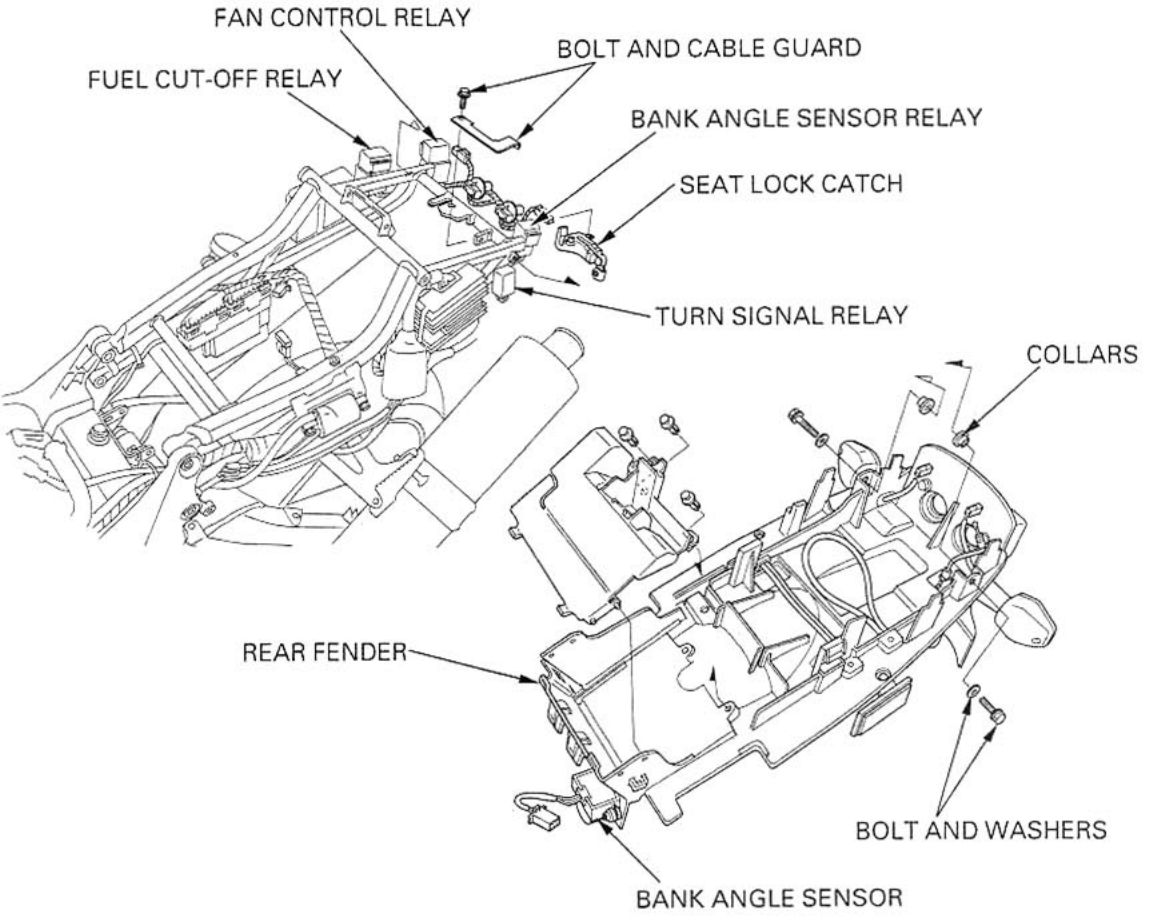
FAN CONTROL RELAY
BOLT AND CABLE GUARD
FUEL CUT-OFF RELAY
BANK ANGLE SENSOR RELAY
SEAT LOCK CATCH
TURN SIGNAL RELAY
COLLARS
REAR FENDER
BOLT AND WASHERS
BANK ANGLE SENSOR

SEAT RAIL

Remove the rear fender (page 2-9).

Remove the following from the seat rail:
- converter unit
- bolt and rear brake reservoir
- two bolts, ('00–'01: clamp) and regulator/rectifier
- starter relay switch
- two bolts and rear ignition coil
- four bolts and passenger footpeg holders
- After '01: wire harness clamp and ground cable

Place a rag or shop towel over the fuel tank to avoid damaging it. Be careful not to damage the mounting bolt threaded holes in the seat rail.

Remove the upper and lower mounting bolts, and the seat rail.

Install the seat rail and removed parts in the reverse order of removal.

TORQUE:
Seat rail mounting bolt: 44 N·m (4.5 kgf·m , 33 lbf·ft)
Rear brake reservoir mounting bolt:
9 N·m (0.9 kgf·m , 6.5 lbf·ft)
Passenger footpeg holder bolt:
26 N·m (2.7 kgf·m , 20 lbf·ft)

'00–'01:

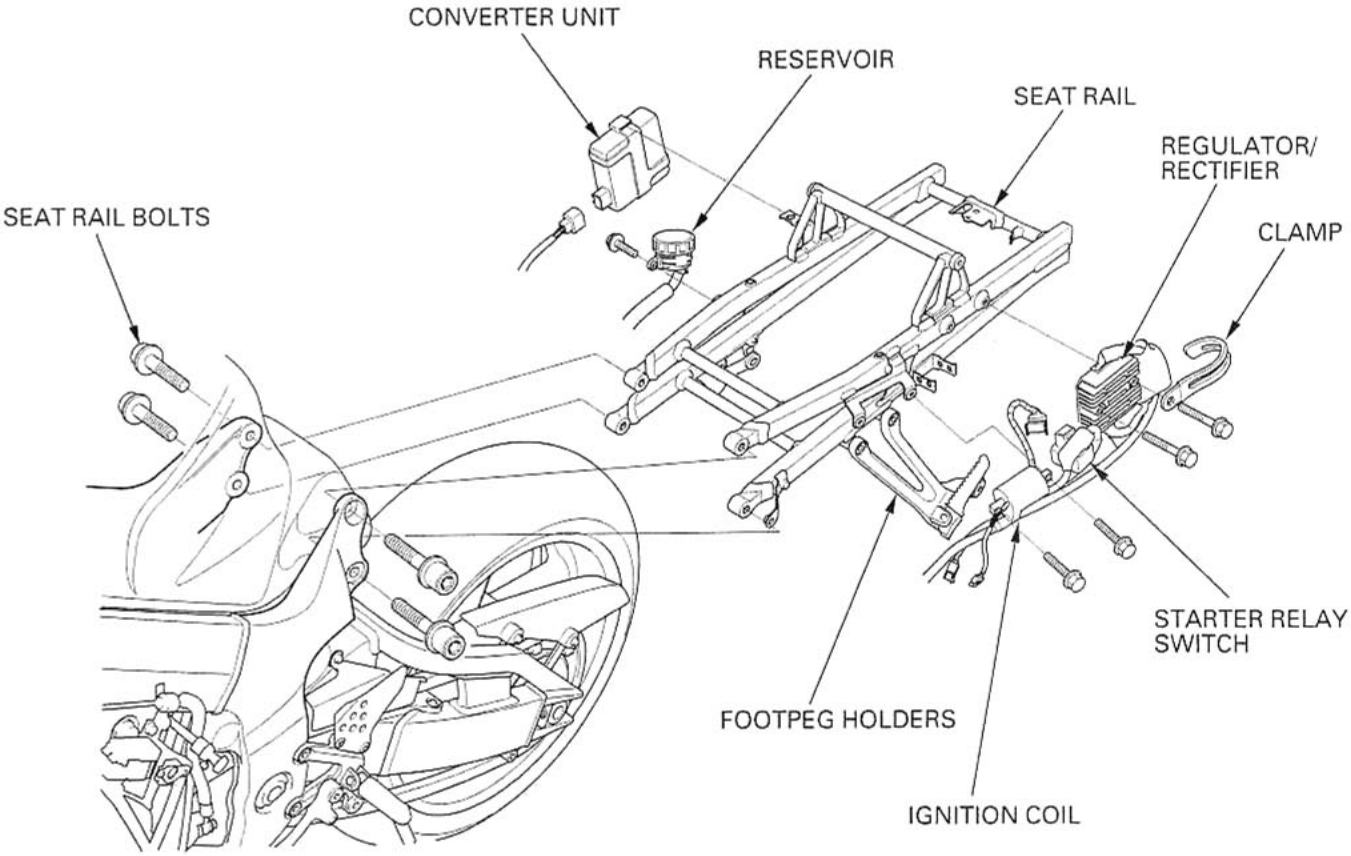

After'01:

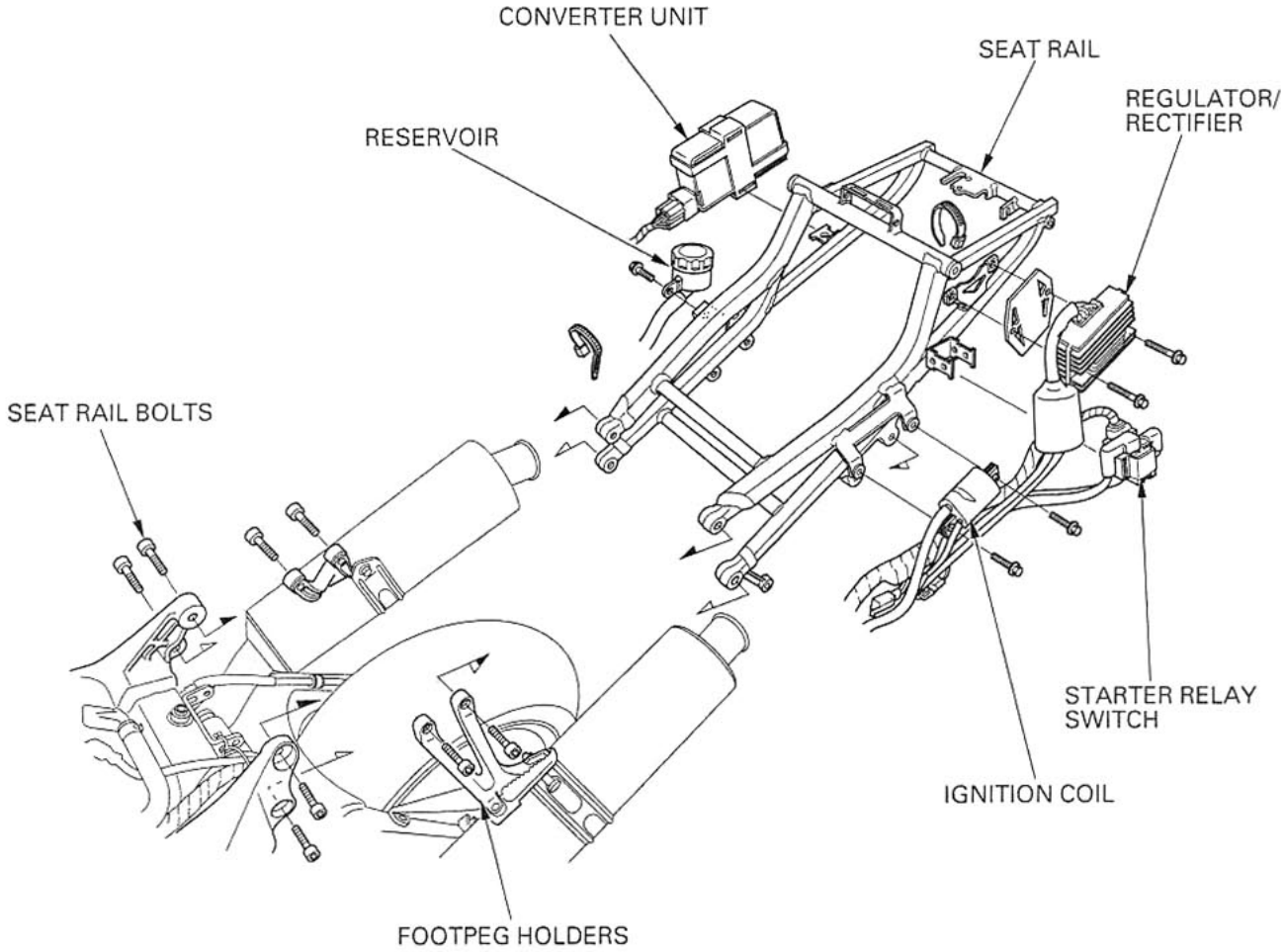
CONVERTER UNIT
SEAT RAIL
REGULATOR/
RECTIFIER
RESERVOIR
SEAT RAIL BOLTS
STARTER RELAY
SWITCH
IGNITION COIL
FOOTPEG HOLDERS

4. LUBRICATION SYSTEM

SERVICE INFORMATION

GENERAL

- The oil pump can be serviced with the engine installed in the frame.
- For engine oil level check, see page 3-15.
- For engine oil change, see page 3-15.
- For engine oil filter change, see page 3-16.
- For oil pressure indicator inspection, see page 19-17.

SPECIFICATIONS

Unit: mm (in)

ITEM		STANDARD	SERVICE LIMIT
Engine oil capacity	After draining	3.5 ℓ (3.7 US qt , 3.1 Imp qt)	———
	After draining/filter change	3.9 ℓ (4.1 US qt , 3.4 Imp qt)	———
	After disassembly	4.3 ℓ (4.5 US qt , 3.8 Imp qt)	———
Recommended engine oil		Honda GN4 4-stroke oil or equivalent motor oil API service classification SF or SG Viscosity: SAE 10W-40	———
Oil pressure (at oil filter)		431 kPa (4.4 kgf/cm², 63 psi) at 5,000 rpm/80°C(176°F)	———
Oil pump	Tip clearance	0.15 (0.006)	0.20 (0.008)
	Body clearance	0.15 – 0.21 (0.006 – 0.008)	0.35 (0.014)
	Side clearance	0.02 – 0.09 (0.001 – 0.004)	0.12 (0.005)

TORQUE VALUES

Oil filter cartridge	25 N·m (2.6 kgf·m , 19 lbf·ft)
Oil pump bolt	8 N·m (0.8 kgf·m , 5.8 lbf·ft)

TOOLS

Oil pressure gauge	07506-3000000	Equivalent commercially available in U.S.A.
Oil pressure gauge attachment	07510-4220100	Equivalent commercially available in U.S.A.
Oil pressure gauge joint adaptor	07RMK-MW40100	Not available in U.S.A.
Oil filter wrench	07HAA-PJ70100	

OIL PRESSURE CHECK

Remove the lower inner fairing and lower fairings (page 2-3, 2-4).

Remove the oil filter cartridge.

TOOL:
Oil filter wrench 07HAA-PJ70100

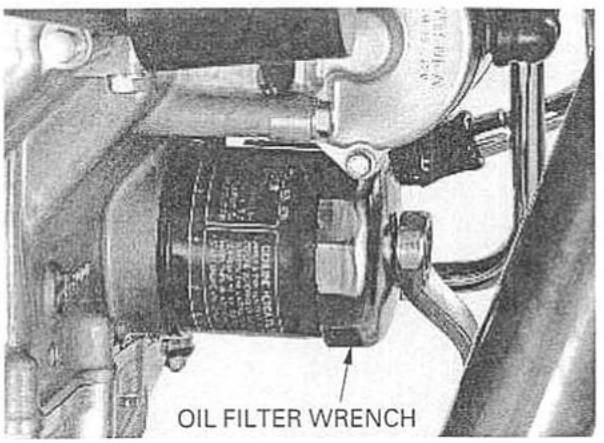

Apply oil to the oil pressure gauge joint adaptor O-ring and install the adaptor onto the oil filter boss.

TOOL:
Oil pressure gauge joint adaptor 07RMK-MW40100

Reinstall the oil filter cartridge and tighten it.

TOOL:
Oil filter wrench 07HAA-PJ70100

TORQUE: 25 N·m (2.6 kgf·m , 19 lbf·ft)

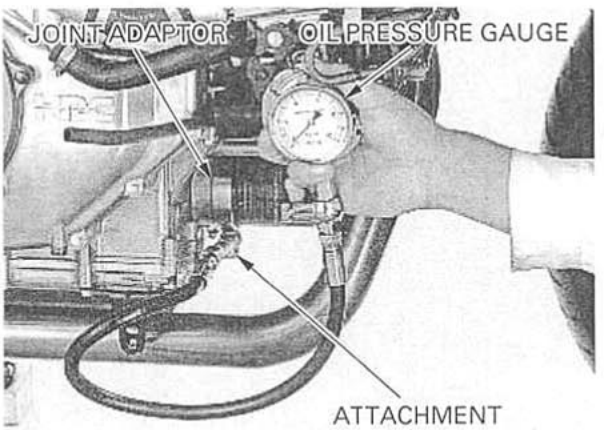

Install the oil pressure gauge and attachment onto the joint adaptor.

TOOLS:

Oil pressure gauge attachment	07510-4220100 or equivalent commercially available in U.S.A.
Oil pressure gauge	07506-3000000 or equivalent commercially available in U.S.A.

Check the oil level and add the recommended oil if necessary (page 3-15).

Start the engine, warm it up to normal operating temperature and check the oil pressure.

OIL PRESSURE: 431 kPa (4.4 kgf/cm^2 , 63 psi) at 5,000 rpm/80°C(176°F)

Remove the special tools and oil filter cartridge.

Reinstall the oil filter cartridge and tighten it.

TOOL:
Oil filter wrench 07HAA-PJ70100

TORQUE: 25 N·m (2.6 kgf·m , 19 lbf·ft)

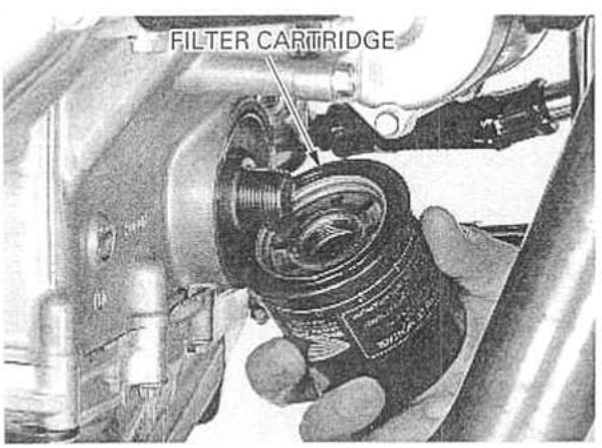

Check the engine oil level and add the recommended oil if necessary (page 3-15).
Make sure there are no oil leaks.

Install the lower fairings and inner fairing (page 2-3, 2-4).

OIL STRAINER/PRESSURE RELIEF VALVE

OIL PAN REMOVAL

Drain the engine oil (page 3-15).
Remove the exhaust pipe (page 2-5).

Remove the twelve oil pan mounting bolts, lower fairing stays and the oil pan.

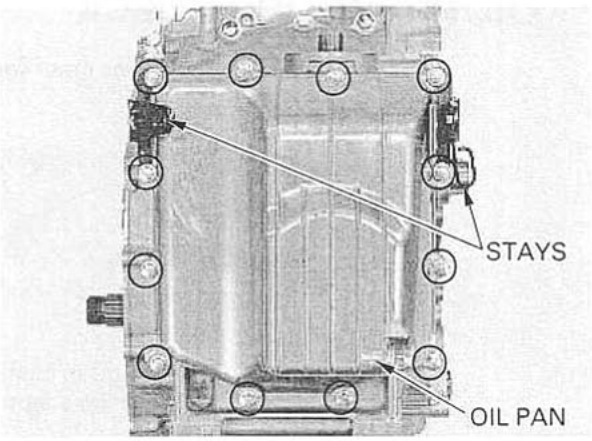

OIL STRAINER

Remove the oil strainer and seal rubber from the lower crankcase.

Clean the oil strainer screen thoroughly.

Coat a new rubber seal with oil and install it onto the strainer.
Install the strainer, aligning its tab with the groove in the lower crankcase.

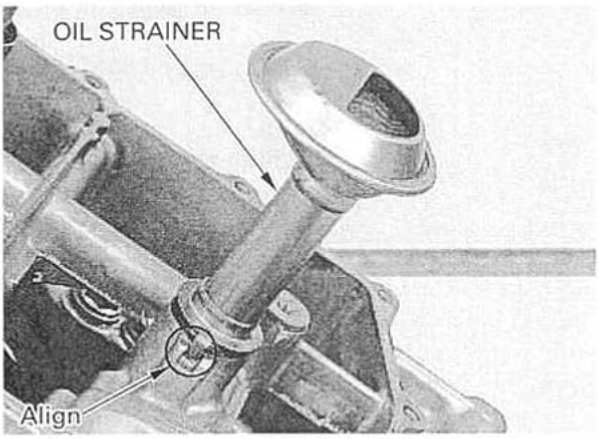

OIL PRESSURE RELIEF VALVE

Remove the oil pressure relief valve from the lower crankcase.
Remove the O-ring from the relief valve body.

Check the operation of the pressure relief valve by pushing on the piston.

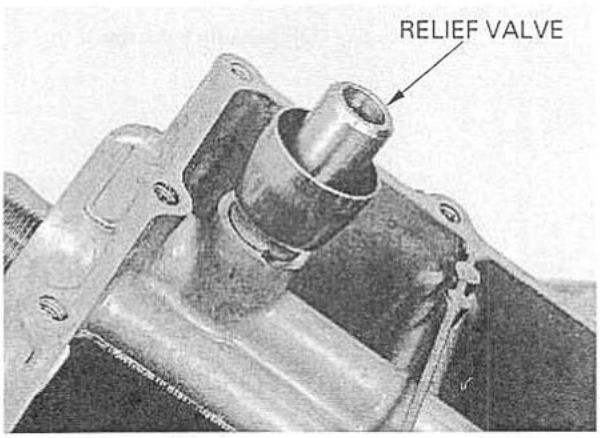

Coat a new O-ring with oil and install it into the relief valve body groove.
Install the relief valve into the lower crankcase.

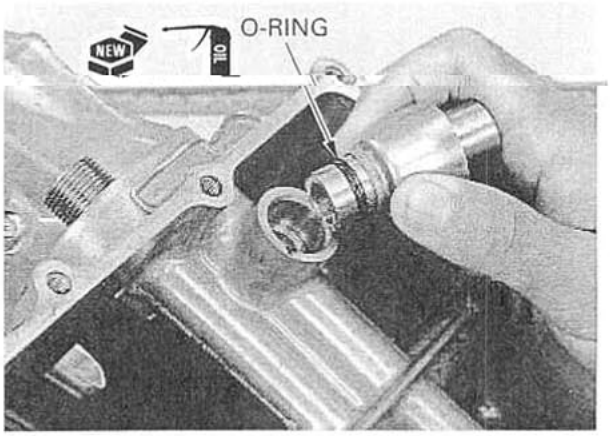

OIL PAN INSTALLATION

Clean the oil pan mating surfaces thoroughly.
Apply sealant to the oil pan mating surface.

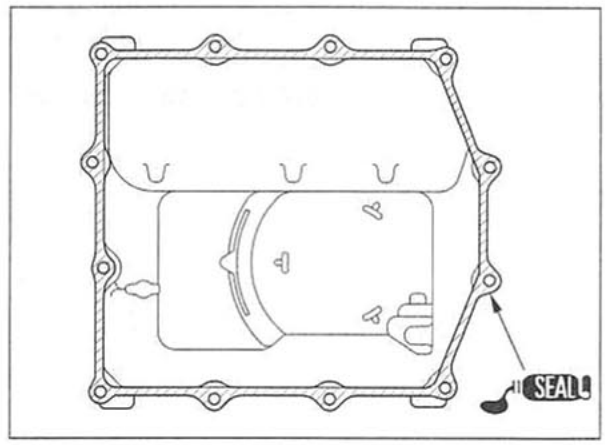

Install the oil pan and lower fairing stays, and tighten the 12 bolts in a crisscross pattern in two or three steps.

Install the exhaust pipe (page 2-7).
Fill the crankcase with recommended engine oil (page 3-15).

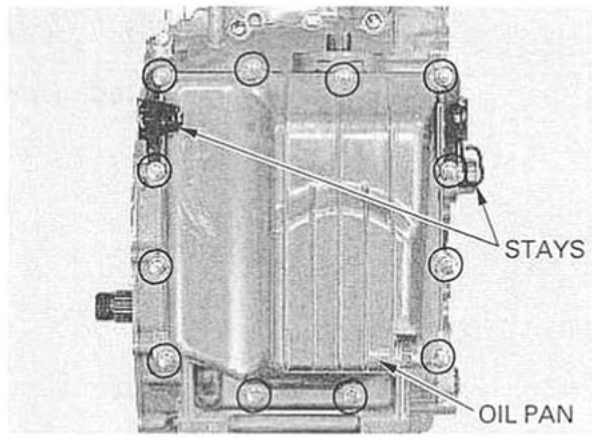

OIL PUMP

REMOVAL

Remove the clutch and oil pump driven sprocket (page 9-12).

Remove the oil pump mounting bolts and the oil pump.

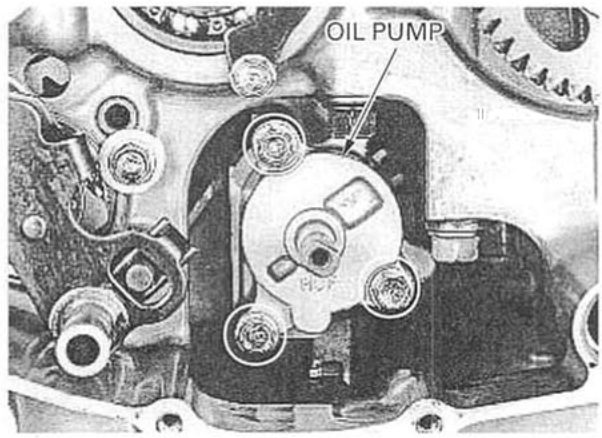

DISASSEMBLY/INSPECTION

Remove the following:
- oil pump bolt
- oil pump cover
- dowel pin
- thrust washer

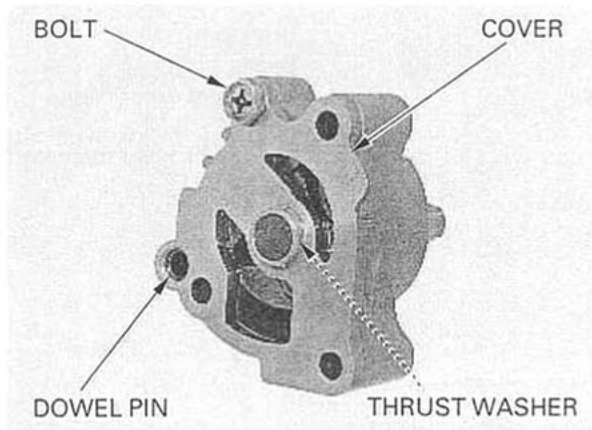

Measure the rotor tip clearance.

SERVICE LIMIT: 0.20 mm (0.008 in)

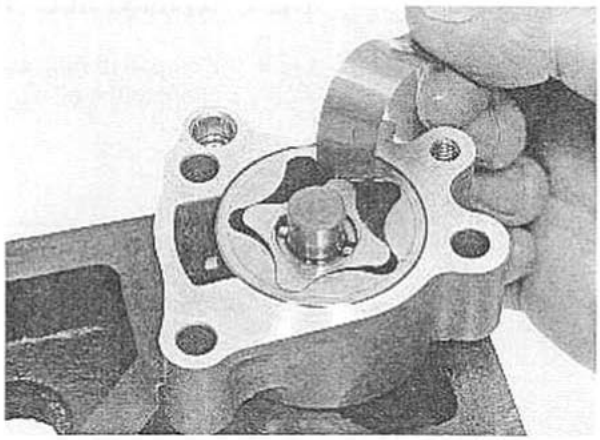

Measure the pump body clearance.

SERVICE LIMIT: 0.35 mm (0.014 in)

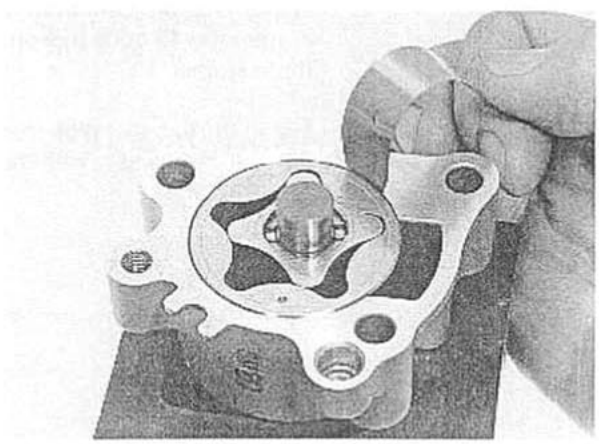

Measure the pump side clearance.

SERVICE LIMIT: 0.12 mm (0.005 in)

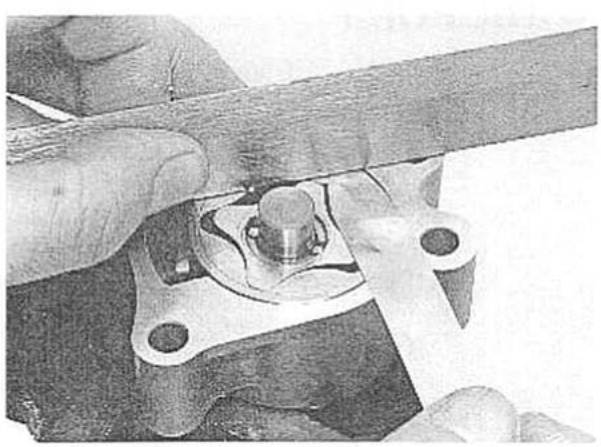

- drive pin
- pump shaft
- inner and outer rotors

Clean all disassembled parts thoroughly.

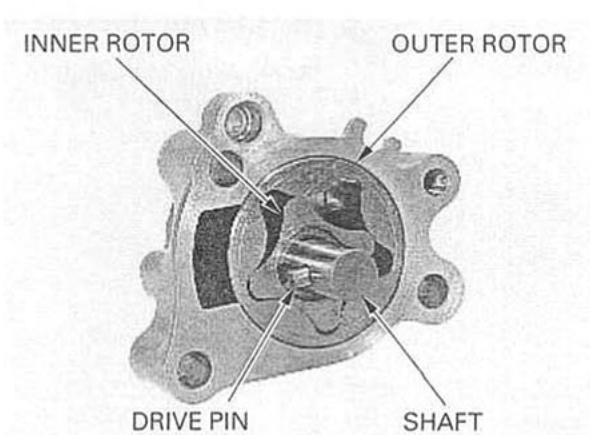

ASSEMBLY

Dip all parts in clean engine oil.

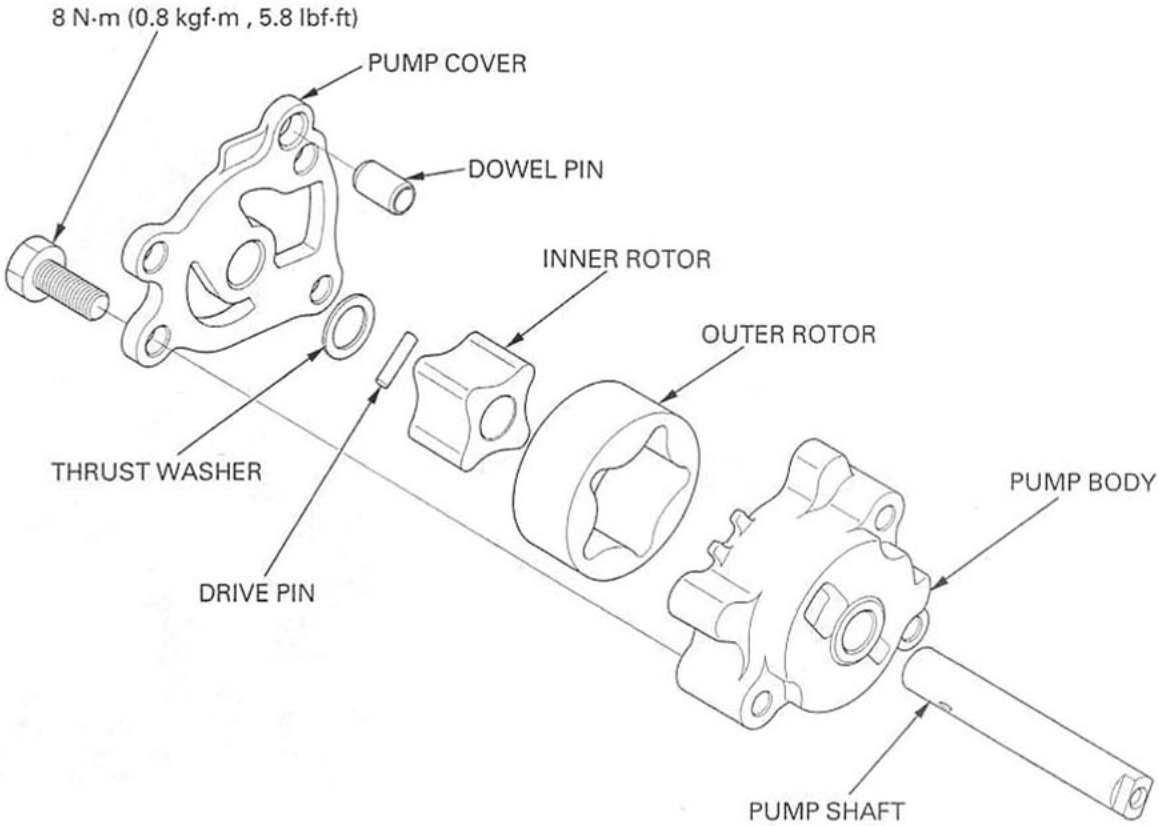

Install the outer rotor with the punch mark facing out.
Install the inner rotor with the drive pin grooves facing out.
Insert the pump shaft into the pump body and inner rotor.
Install the drive pin into the pump shaft and set the drive pin in the inner rotor grooves.

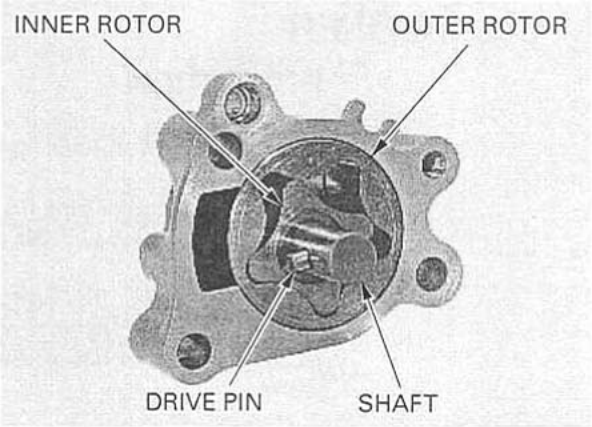

Install the thrust washer onto the pump shaft.
Install the dowel pin into the pump body.
Install the pump cover onto the pump body.

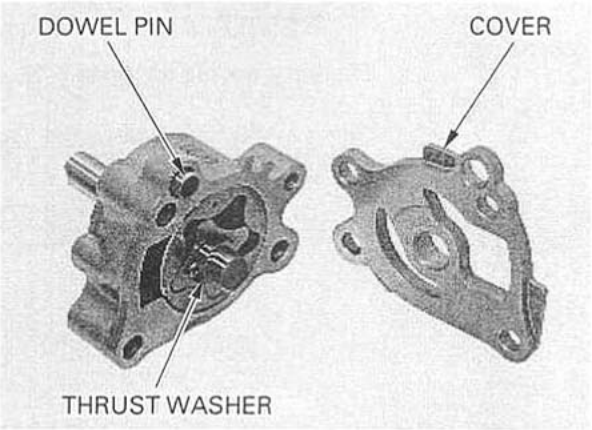

Install the oil pump bolt and tighten it.

TORQUE: 8 N·m (0.8 kgf·m , 5.8 lbf·ft)

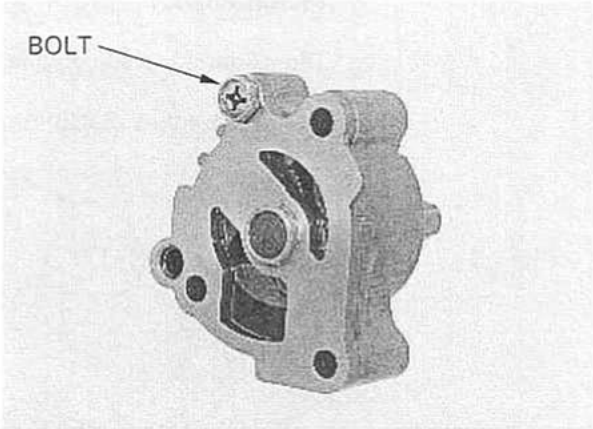

INSTALLATION

Install the oil pump onto the lower crankcase and tighten the mounting bolts securely.

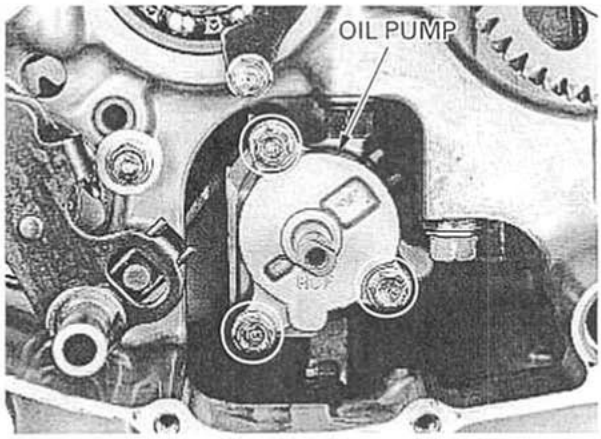

OIL COOLER

INSPECTION

Remove the lower inner fairing (page 2-3).

Check the oil cooler pipe joints and seams for leaks.
Check the oil cooler air passage for clogs or damage.
Straighten bent fins with a small, flat blade screwdriver and remove insects, mud or other obstructions with compressed air or low pressure water.

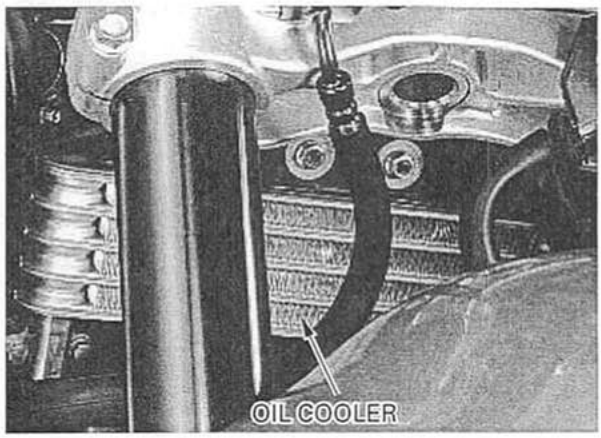

REMOVAL ('00 – '01)

Drain the engine oil (page 3-15).

Remove the oil cooler pipe joint bolts and joints from the oil cooler.

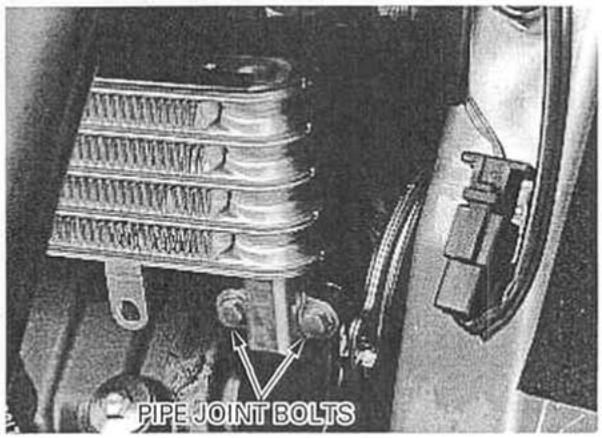

Remove the mounting nuts and the oil cooler from the bracket.

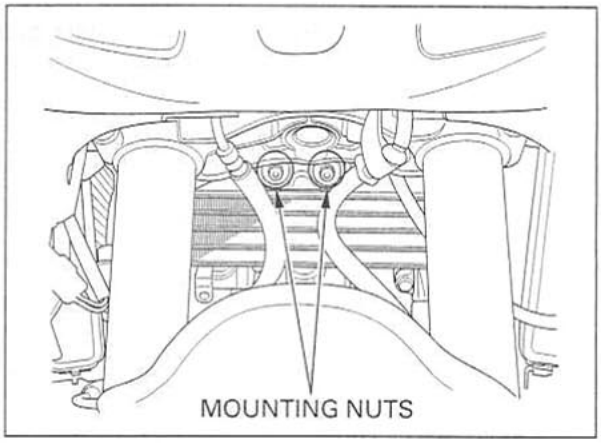

Remove the oil hose joint bolts and joints from the engine, then remove the oil hoses/pipes.

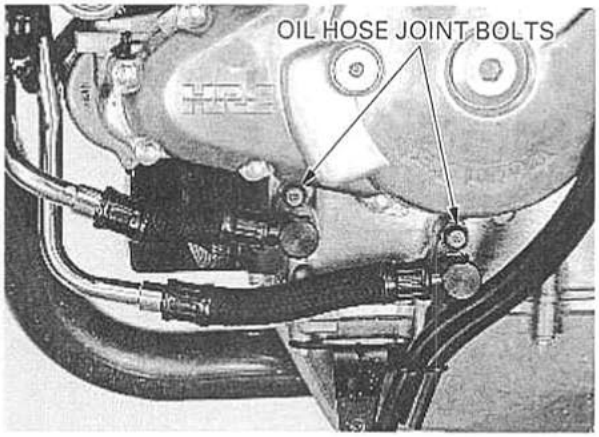

REMOVAL (After '01)

Drain the engine oil (page 3-15)

Remove the oil hose joint bolts and joints from the engine.

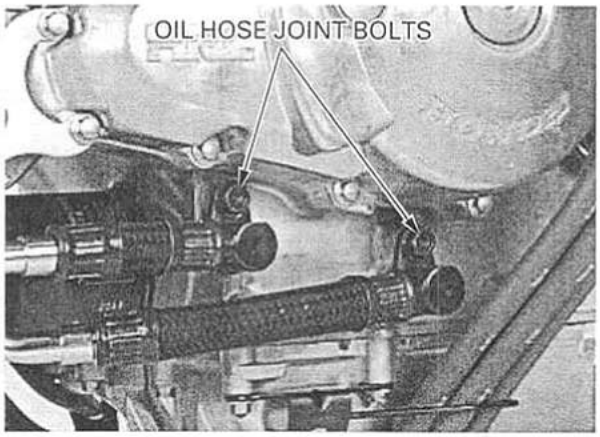

Remove the mounting bolts, washers and the oil cooler from the bracket.

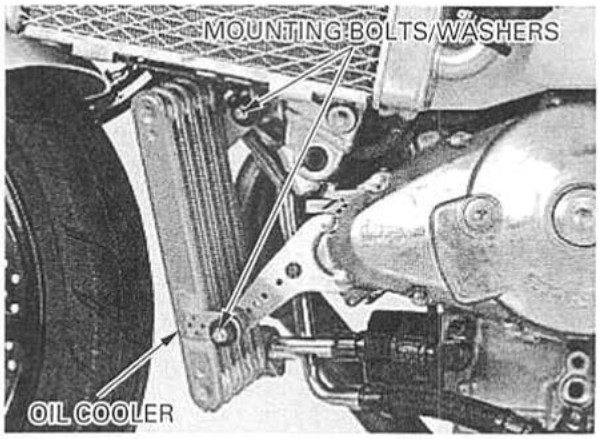

Remove the oil cooler pipe joint bolts and joints from the oil cooler, then remove the oil hoses/pipes.

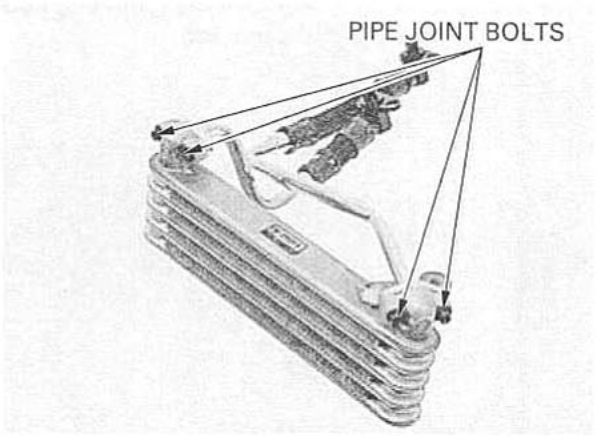

INSTALLATION ('00 – '01)

Coat new O-rings with oil and install them onto the oil hose joints.
Apply locking agent to the oil hose joint bolt threads.
Connect the oil hose joints to the engine and tighten the bolts.

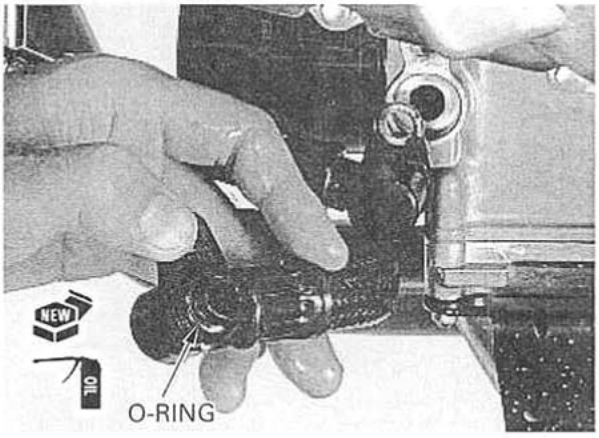

Install the oil cooler onto the bracket and tighten the mounting nuts.
Coat new O-rings with oil and install them onto the oil pipe joints.
Apply locking agent to the oil pipe joint bolt threads.
Connect the oil pipe joints to the oil cooler and tighten the bolts.

Fill the crankcase with the recommended engine oil (page 3-15).

Install the lower fairings and inner fairing (page 2-3, 2-4).

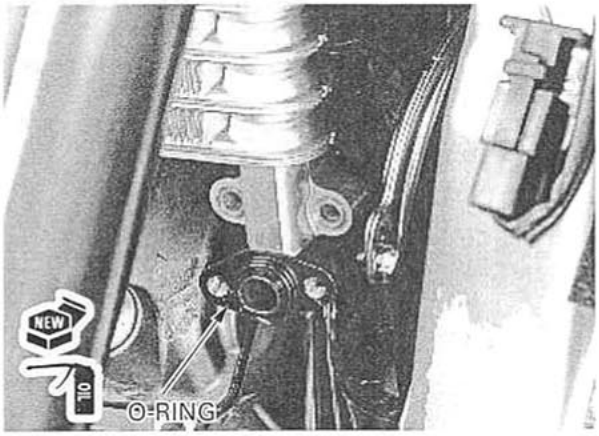

INSTALLATION (After '01)

Coat new O-rings with oil and install them onto the oil pipe joints.
Apply locking agent to the oil pipe joint bolt threads.
Connect the oil pipe joints to the oil cooler and tighten the bolts.

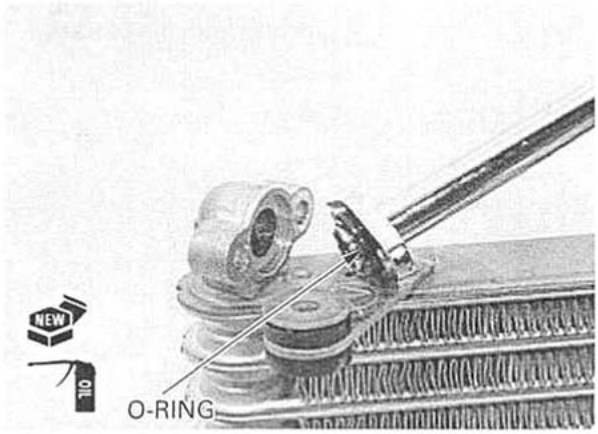

Install the oil cooler onto the bracket and tighten the mounting bolts and washers.

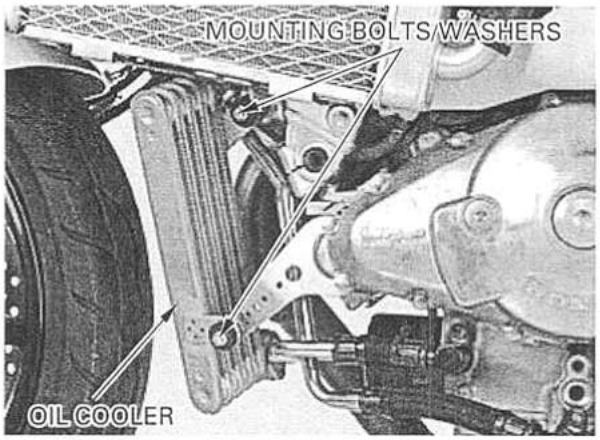

Coat new O-rings with oil and install them onto the oil hose joints.
Apply locking agent to the oil hose joint bolt threads.
Connect the oil hose joints to the engine and tighten the bolts.

Fill the crankcase with the recommended engine oil (page 3-15).

Install the lower fairings and inner fairing (page 2-3, 2-4).

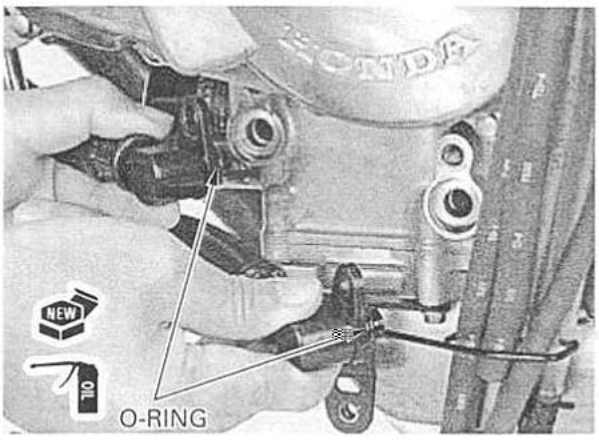

6. COOLING SYSTEM

SERVICE INFORMATION

GENERAL

6

⚠ WARNING

Removing the radiator cap while the engine is hot can allow the coolant to spray out, seriously scalding you. Always let the engine and radiator cool down before removing the radiator cap.

NOTICE

Using coolant with silicate corrosion inhibitors may cause premature wear of water pump seals or blockage of radiator passages. Using tap water may cause engine damage.

- Add coolant at the reserve tank. Do not remove the radiator cap except to refill or drain the system.
- All cooling system service can be done with the engine in the frame.
- Avoid spilling coolant onto painted surfaces.
- After servicing the system, check for leaks with a cooling system tester.
- Refer to section 19 for fan motor switch and thermosensor information.

SPECIFICATIONS

ITEM			SPECIFICATIONS
Coolant capacity	Radiator and engine	'00 – '01	2.5 ℓ (2.6 US qt , 2.2 Imp qt)
		After'01	2.9 ℓ (3.1 US qt , 2.6 Imp qt)
	Reserve tank		0.43 ℓ (0.45 US qt , 0.38 Imp qt)
Radiator cap relief pressure			108 – 137 kPa (1.1 – 1.4 kgf/cm², 16 – 20 psi)
Thermostat	Begin to open		80 – 84 °C (176 – 183 °F)
	Fully open		95 °C (203 °F)
	Valve lift		8 mm (0.3 in) minimum
Recommended antifreeze			Pro Honda HP Coolant or an equivalent high quality ethylene glycol antifreeze containing silicate-free corrosion inhibitors
Standard coolant concentration			1:1 mixture with soft water

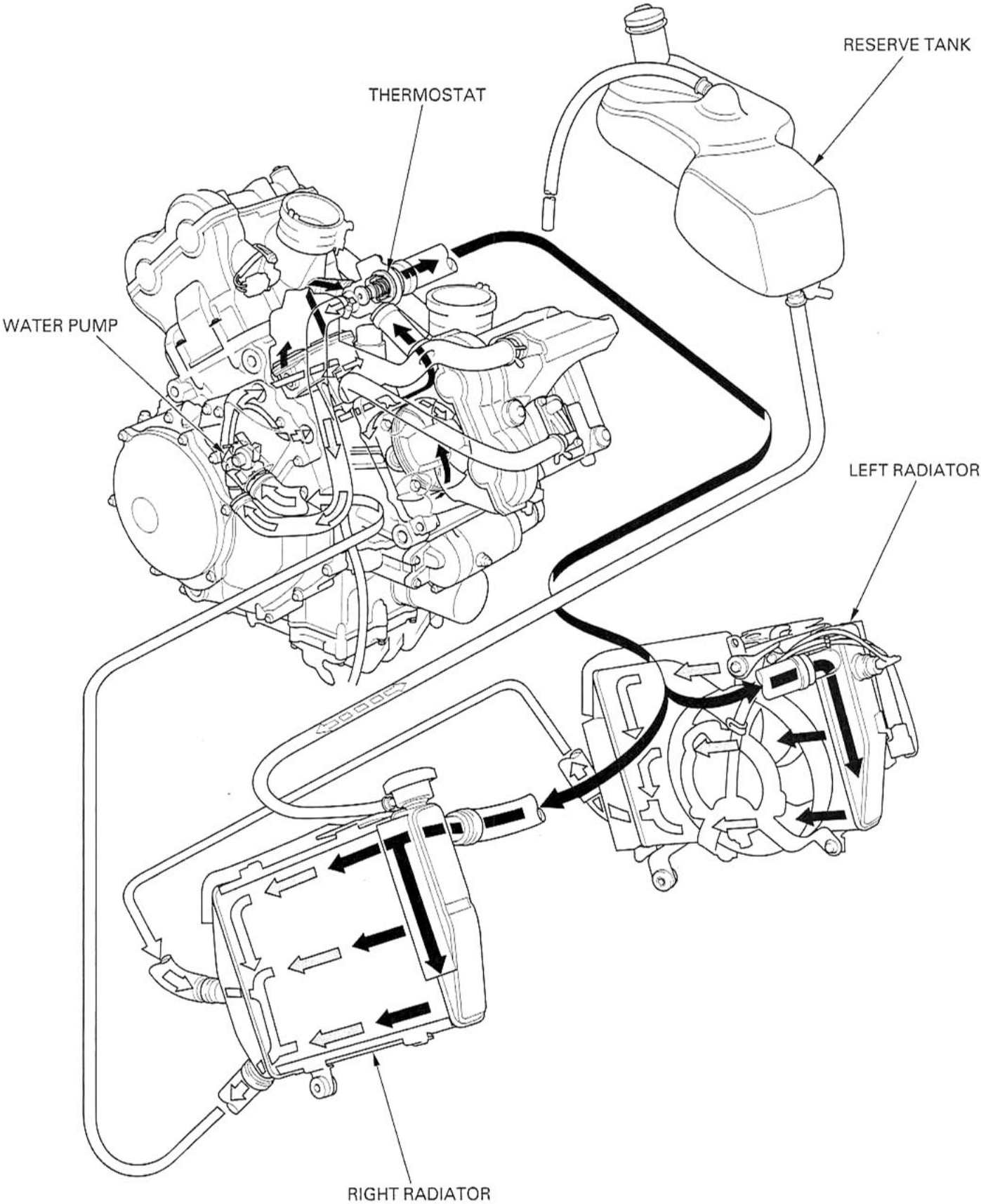
RESERVE TANK
THERMOSTAT
WATER PUMP
LEFT RADIATOR
RIGHT RADIATOR

TOOLS

Remover base	07965-SD90100
Bearing remover shaft	07936-GE00100 ┐ equivalent commercially available in U.S.A.
Bearing remover head, 10 mm	07936-GE00200 ┘
Remover weight	07741-0010201 or 07936-371020A or 07936-3710200 (U.S.A. only)
Driver	07749-0010000
Mechanical seal driver attachment	07945-4150400
or	
Mechanical seal installer	07965-415000A (U.S.A. only)
Attachment, 28 × 30 mm	07946-1870100
Pilot, 10 mm	07746-0040100
Pilot collar, 22 mm	07PAF-0010680 or 07KMF-MT20200
Seal driver, 58 mm	07JAD-PH80101

TROUBLESHOOTING

Engine temperature too high
- Faulty temperature gauge or thermosensor
- Thermostat stuck closed
- Faulty radiator cap
- Insufficient coolant
- Passages blocked in radiator, hoses or water jacket
- Air in system
- Faulty cooling fan motor
- Faulty fan motor switch
- Faulty water pump

Engine temperature too low
- Faulty temperature gauge or thermosensor
- Thermostat stuck open
- Faulty fan motor switch

Coolant leaks
- Faulty water pump mechanical seal
- Deteriorated O-rings
- Faulty radiator cap
- Damaged or deteriorated cylinder head gasket
- Loose hose connection or clamp
- Damaged or deteriorated hoses

SYSTEM TESTING

Remove the upper fairing (page 2-5).

Remove the radiator cap.

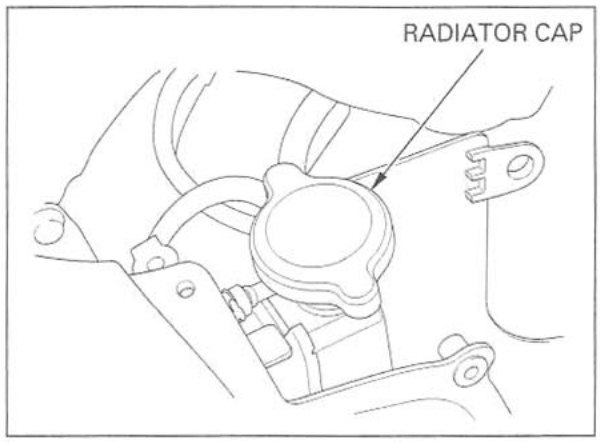

COOLANT (HYDROMETER TEST)

Test the coolant gravity using a hydrometer.

STANDARD COOLANT CONCENTRATION: 50%

Look for contamination and replace the coolant if necessary.

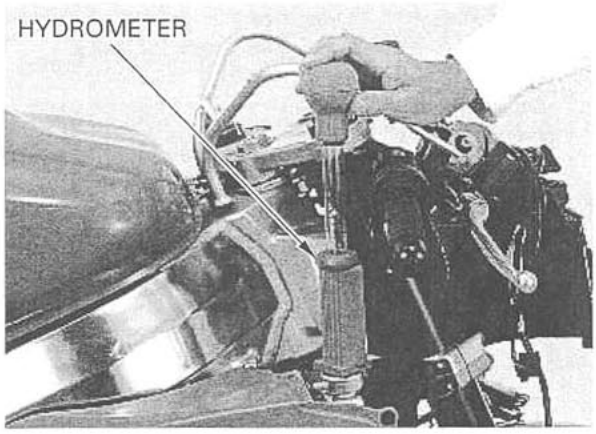

Coolant temperature °C (°F) / Coolant ratio %	0 (32)	5 (41)	10 (50)	15 (59)	20 (68)	25 (77)	30 (86)	35 (95)	40 (104)	45 (113)	50 (122)
5	1.009	1.009	1.008	1.008	1.007	1.006	1.005	1.003	1.001	0.999	0.997
10	1.018	1.017	1.017	1.016	1.015	1.014	1.013	1.011	1.009	1.007	1.005
15	1.028	1.027	1.026	1.025	1.024	1.022	1.020	1.018	1.016	1.014	1.012
20	1.036	1.035	1.034	1.033	1.031	1.029	1.027	1.025	1.023	1.021	1.019
25	1.045	1.044	1.043	1.042	1.040	1.038	1.036	1.034	1.031	1.028	1.025
30	1.053	1.052	1.051	1.049	1.047	1.045	1.043	1.041	1.038	1.035	1.032
35	1.063	1.062	1.060	1.058	1.056	1.054	1.052	1.049	1.046	1.043	1.040
40	1.072	1.070	1.068	1.066	1.064	1.062	1.059	1.056	1.053	1.050	1.047
45	1.080	1.078	1.076	1.074	1.072	1.069	1.066	1.063	1.060	1.057	1.054
50	1.086	1.084	1.082	1.080	1.077	1.074	1.071	1.068	1.065	1.062	1.059
55	1.095	1.093	1.091	1.088	1.085	1.082	1.079	1.076	1.073	1.070	1.067
60	1.100	1.098	1.095	1.092	1.089	1.086	1.083	1.080	1.077	1.074	1.071

RADIATOR CAP/SYSTEM PRESSURE INSPECTION

Before installing the cap in the tester, wet the sealing surfaces.

Pressure test the radiator cap using the tester. Replace the radiator cap if it does not hold pressure, or if relief pressure is too high or too low. It must hold the specified pressure for at least 6 seconds.

RADIATOR CAP RELIEF PRESSURE:
108 – 137 kPa (1.1 – 1.4 kgf/cm², 16 – 20 psi)

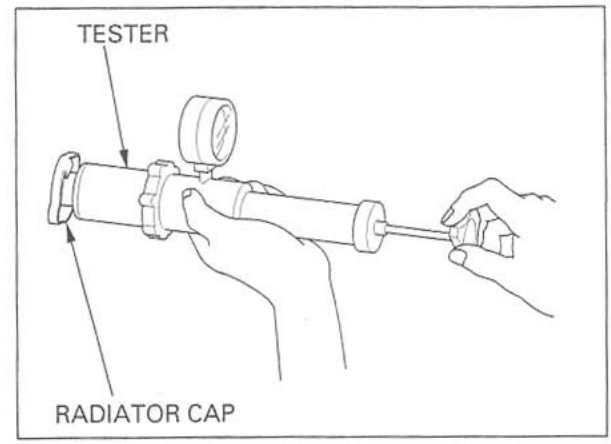

Excessive pressure can damage the cooling system components. Do not exceed 137 kPa (1.4 kgf/cm², 20 psi).

Pressurize the radiator, engine and hoses using the tester, and check for leaks.

Repair or replace components if the system will not hold the specified pressure for at least 6 seconds.

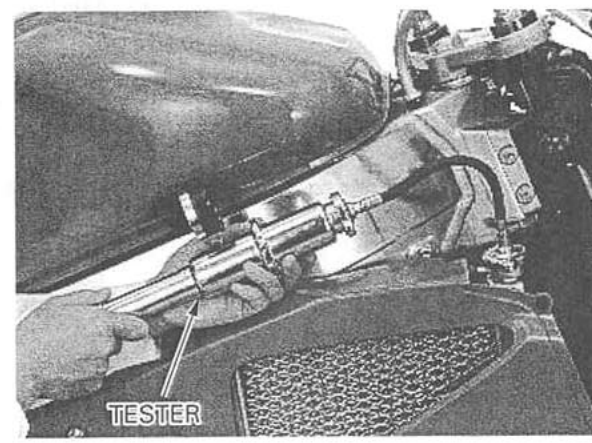

COOLANT REPLACEMENT

PREPARATION

NOTICE

Using coolant with silicate corrosion inhibitors may cause premature wear of water pump seals or blockae of radiator passage. Using tap water may cause engine damage.

NOTE:
- The effectiveness of coolant decreases with the accumulation of rust or if there is a change in the mixing proportion during usage. Therefore, for best performance change the coolant regularly as specified in the maintenance schedule.

Mix only distilled low mineral water with the recommended antifreeze.

RECOMMENDED ANTIFREEZE:
Pro Honda HP Coolant or an equivalent high quality ethylene grycol antifreeze containing silicate-free corrosion inhibitors

RECOMMENDED MIXTURE:
1:1 (distilled water and the recommended antifreeze)

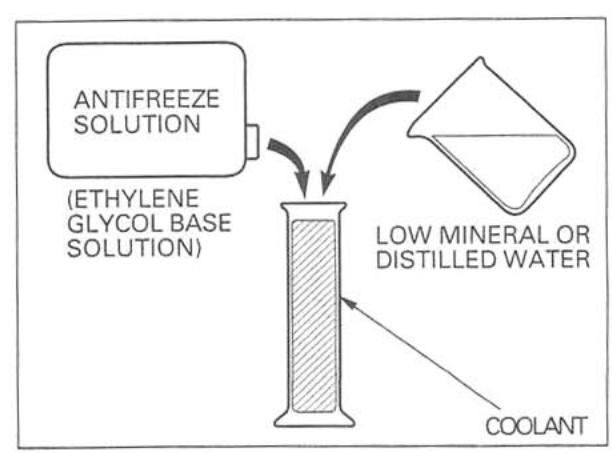

REPLACEMENT/AIR BLEEDING

Remove the following:
- lower inner fairing (page 2-3)
- lower fairings (page 2-4)
- Upper fairing (page 2-5)
- radiator cap

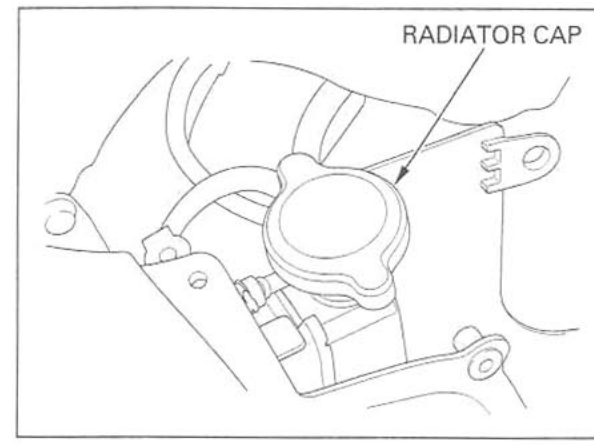

Disconnect the bypass hose from the water pump and drain the coolant from the system.

Connect the bypass hose and tighten the hose band screw.

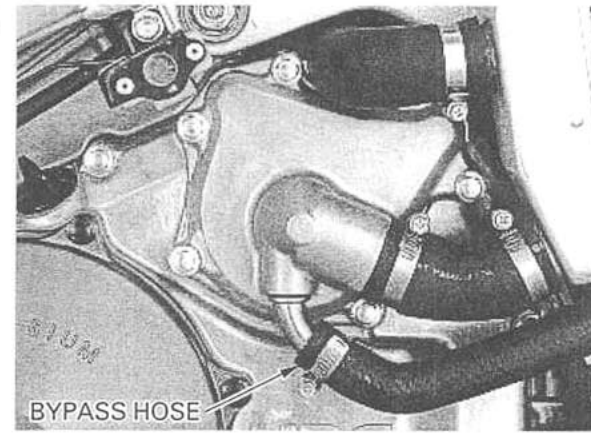

Remove the reserve tank (page 6-11).
Remove the reserve tank cap and drain the coolant from the reserve tank.

Install the reserve tank (page 6-11).

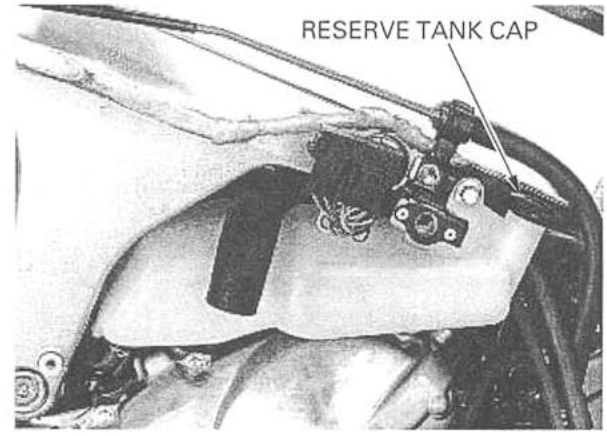

Fill the system with the recommended coolant to the filler neck with the motorcycle on its side stand.

Bleed air from the system as follows:
1. Shift the transmission into neutral.
   Start the engine and let it idle for 2–3 minutes.
2. Snap the throttle three or four times to bleed air from the system.
3. Stop the engine and add coolant up to the filler neck.
4. Install the radiator cap.

Fill the reserve tank to the upper level line with the motorcycle upright on a flat, level surface.

Install the following:
upper fairing (page 2-5)
lower fairings (page 2-4)
lower inner fairing (page 2-3)

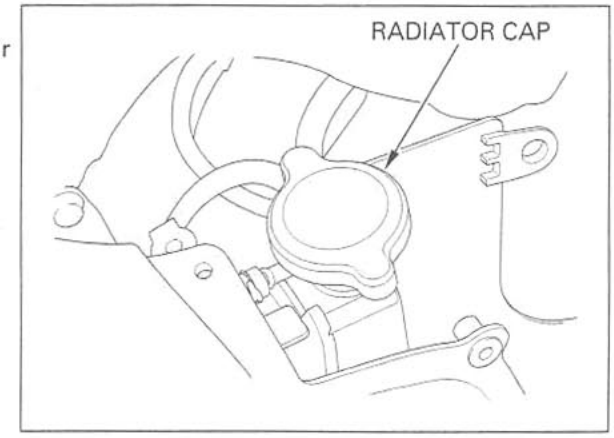

RADIATOR/COOLING FAN

RADIATOR REMOVAL/ INSTALLATION

Drain the coolant from the system (page 6-5).

LEFT RADIATOR

Disconnect the fan motor 2P (black) connector.

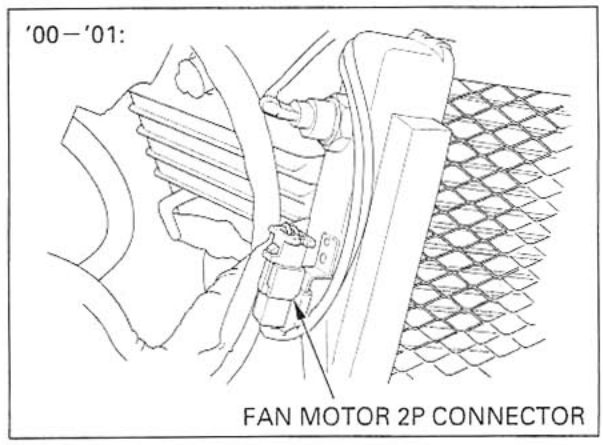

After'01: Remove the mounting bolt, nut and solenoid valve from the stay.

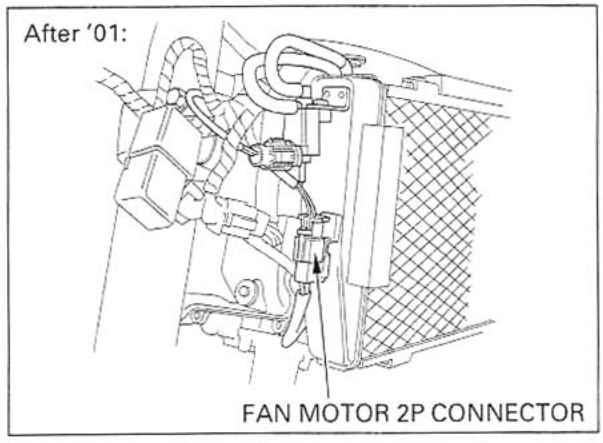

Be careful not to damage the radiator fins while servicing the radiator.

Remove the two (After'01: three) mounting bolts and the radiator from the frame.
Disconnect the upper radiator hose and radiator connector hose from the radiator.

Remove the radiator inner guide and radiator grille if necessary.

Be sure that the front upper radiator hose clamps do not contact the front fork when the handlebars are turned to the left.

Install the left radiator in the reverse order of removal.

Fill and bleed the cooling system (page 6-5).

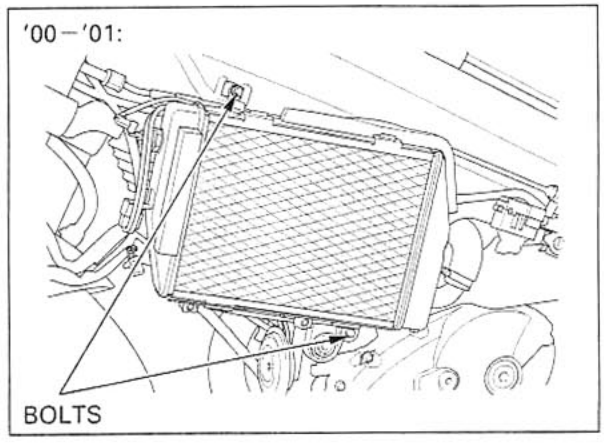

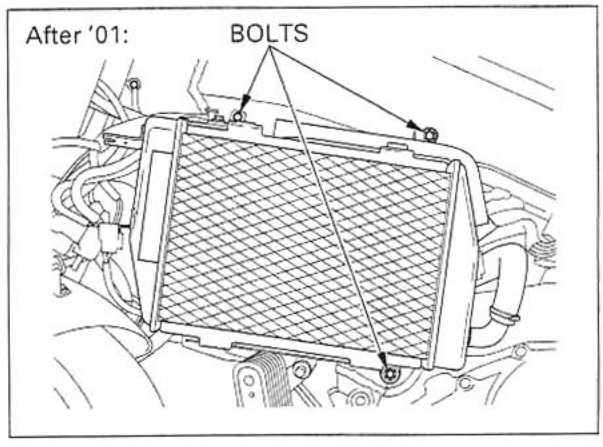

RIGHT RADIATOR

'00–'01:
Disconnect the siphon hose from the filler neck.
Remove the two mounting bolts and the radiator from the frame.
Disconnect the upper and lower radiator hoses, and radiator connector hose from the radiator.

Remove the radiator inner guide and radiator grille if necessary.

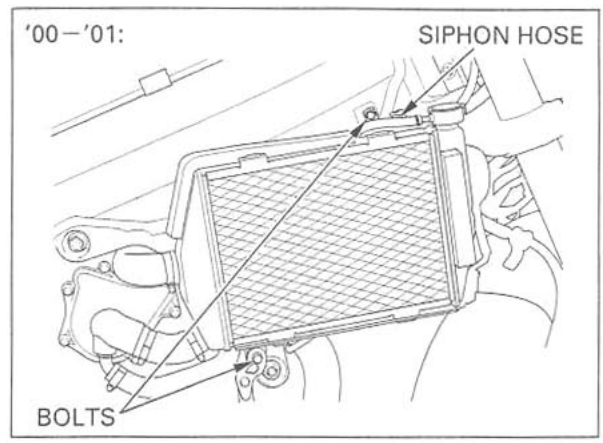

Be sure that the front upper radiator hose clamps do not contact the fork when the handlebars are turned to the right.

Install the right radiator in the reverse order of removal.

Fill and bleed the cooling system (page 6-5).

After '01:
Remove the upper mounting bolt.
Disconnect the upper radiator hose and siphon hose from the filler neck.

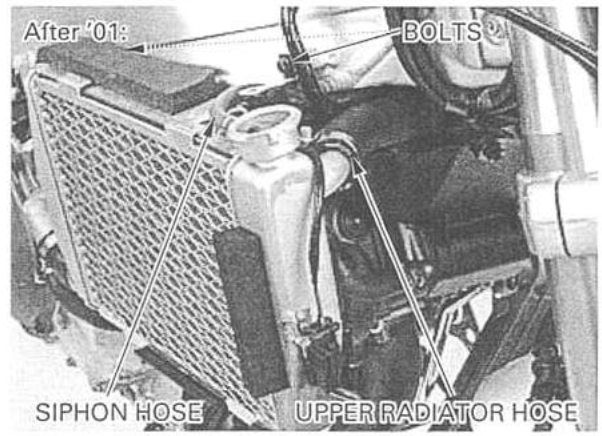

After'01:
Disconnect the horn wire connectors.
Remove the following:
–lower mounting bolt
–horn stay
–horn
–radiator from the frame

Remove the radiator inner guide and radiator grille if necessary.

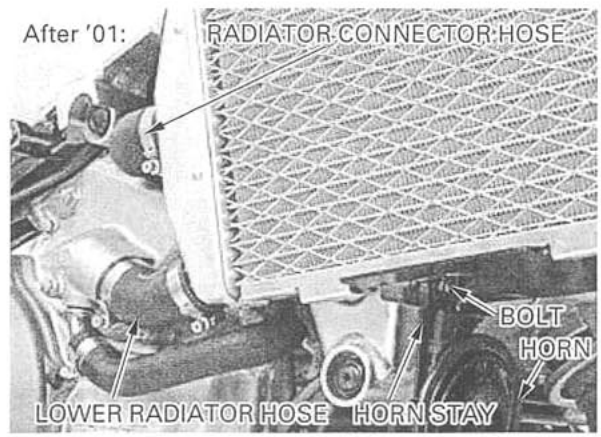

Be sure that the front upper radiator hose clamps do not contact the fork when the handlebars are turned to the right.

Install the right radiator in the reverse order of removal.

Fill and bleed the cooling system (page 6-5).

COOLING FAN DISASSEMBLY

Remove the left (After '01: and/or right) radiator (page 6-6).

'00–'01: Disconnect the fan motor switch connector.
Remove the fan motor connector from the stay.
Remove the fan motor wires (After '01: wire) from the clamp.

Remove the three bolts, ('00–'01: ground wire terminal) and fan shroud/motor assembly from the radiator.

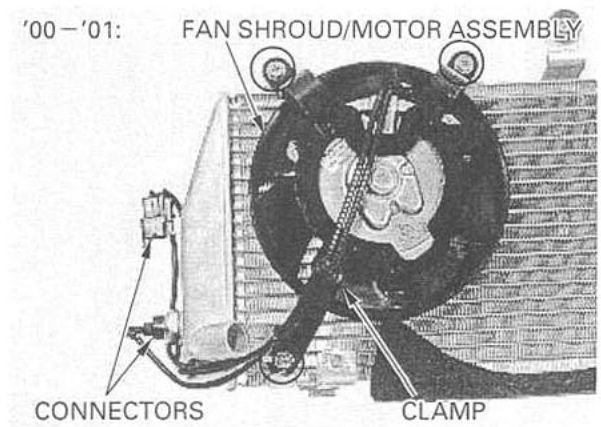

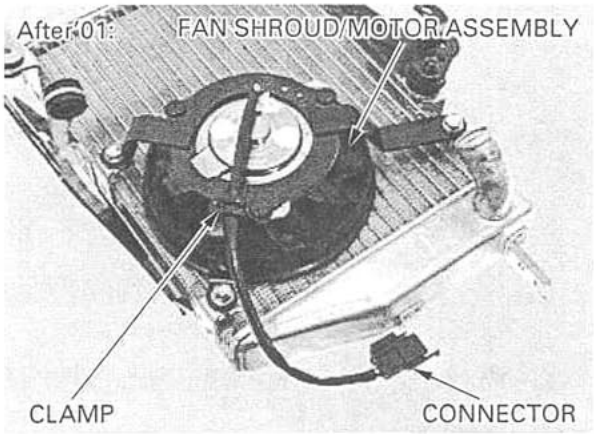

Remove the nut and cooling fan from the motor.

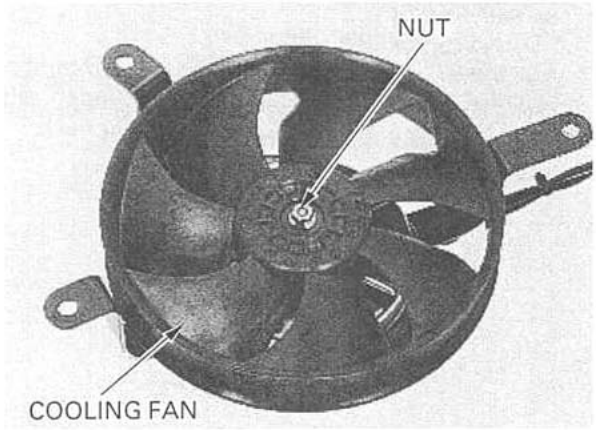

Remove the three nuts and the fan motor from the shroud.

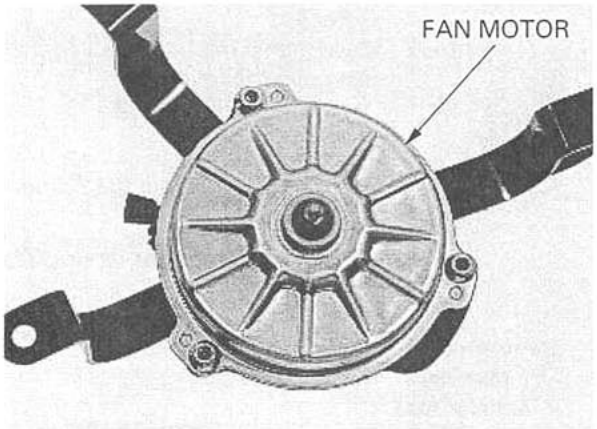

COOLING FAN ASSEMBLY

'00 – '01:

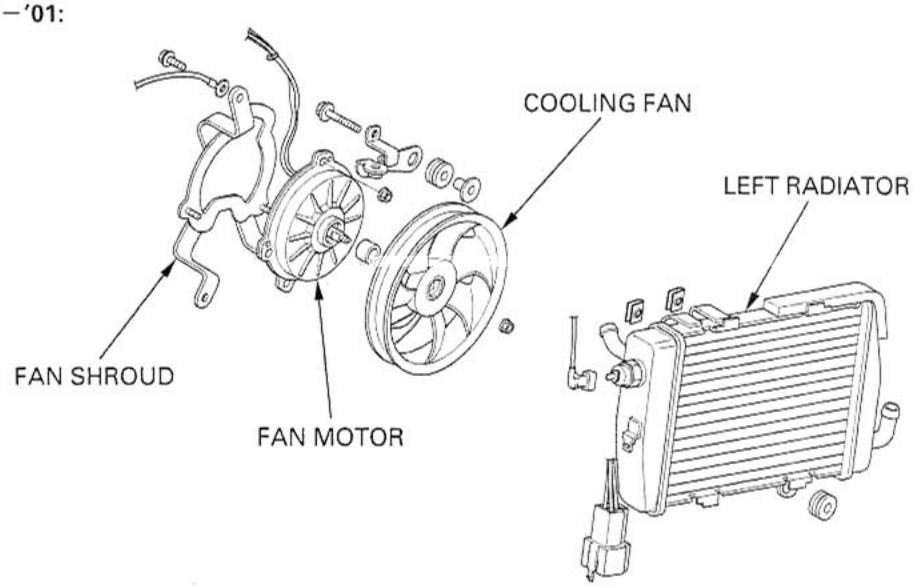

After '01:

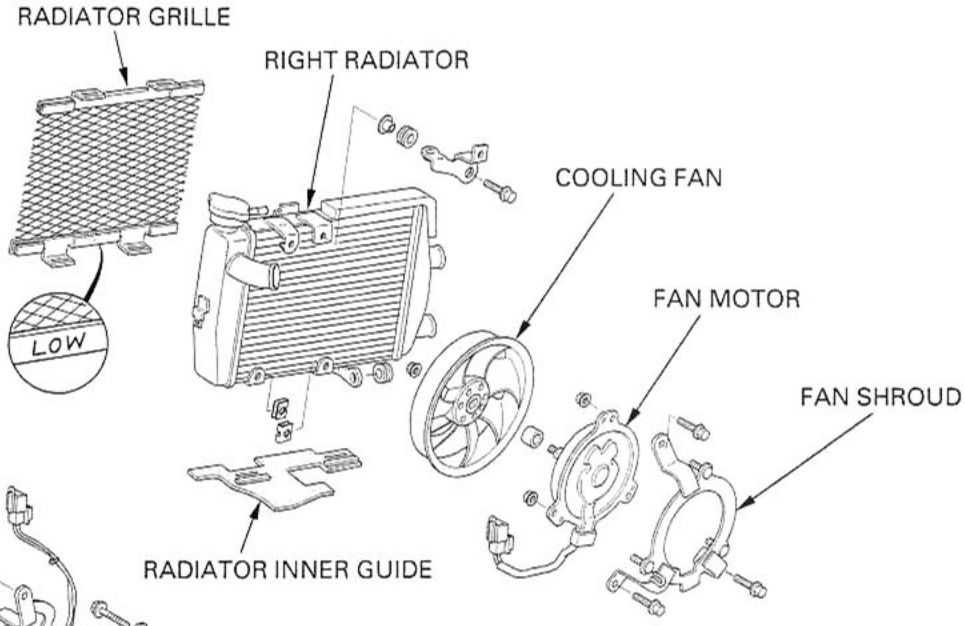

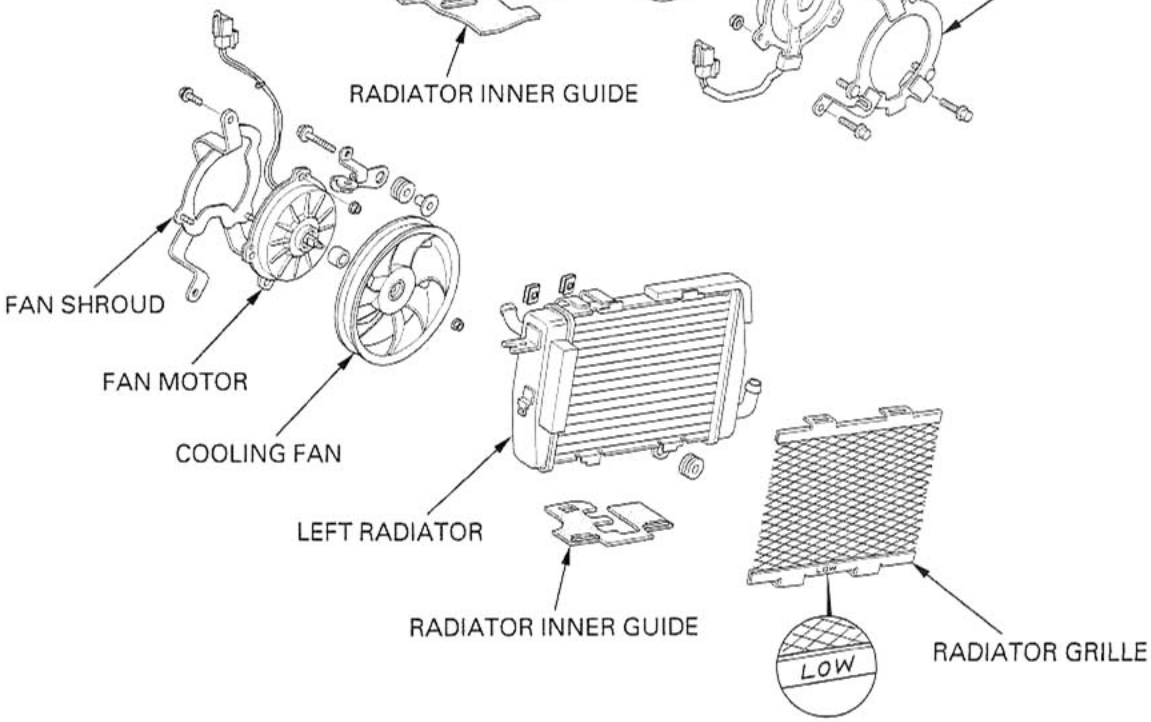

INSPECTION

Visually inspect the thermostat for damage.
Replace the thermostat if the valve stays open at room temperature.

Keep flammable materials away from the electric heating element. Do not let the thermometer or thermostat touch the pan, or you will get false readings.

Heat the water with an electric heating element to operating temperature for 5 minutes.
Suspend the thermostat in heated water to check its operation.

THERMOSTAT BEGINS TO OPEN:
80–84 °C (176–183 °F)
VALVE LIFT:
8 mm (0.3 in) minimum at 95°C (203°F)

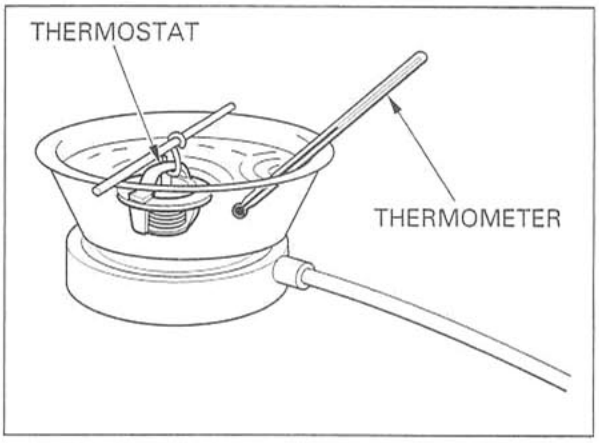

Replace the thermostat if the valve responds at temperature other than those specified.

INSTALLATION

Install the thermostat into the housing with its hole facing up.

Install a new O-ring into the groove in the thermostat housing cover.

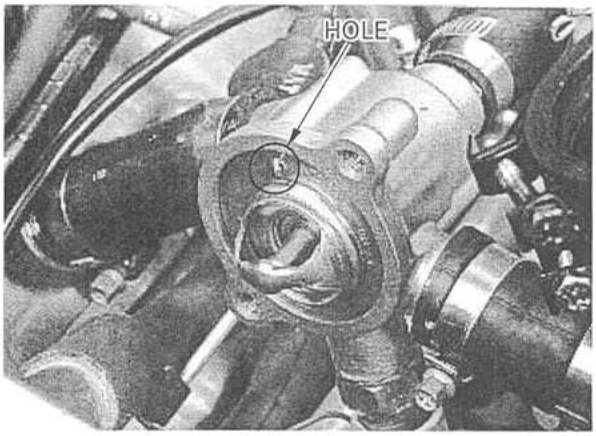

Install the thermostat housing cover, solenoid stay, ground wire terminal and two bolts.
Tighten the bolts securely.

Install the throttle body (page 5-72).
Fill and bleed the cooling system (page 6-5).

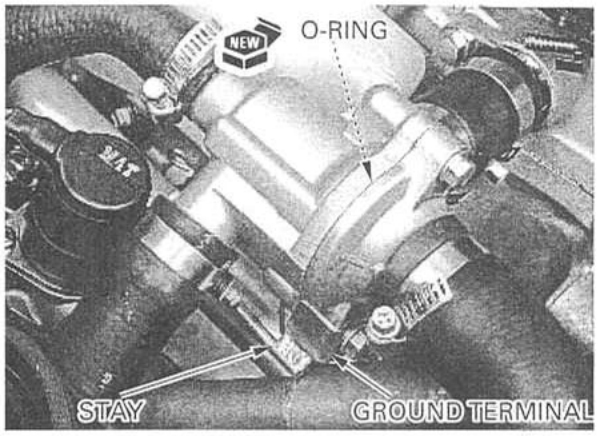

WATER PUMP

MECHANICAL SEAL INSPECTION

Check the inspection hose for signs of coolant leakage.
If there is leakage, the water pump mechanical seal is defective, and it should be replaced.

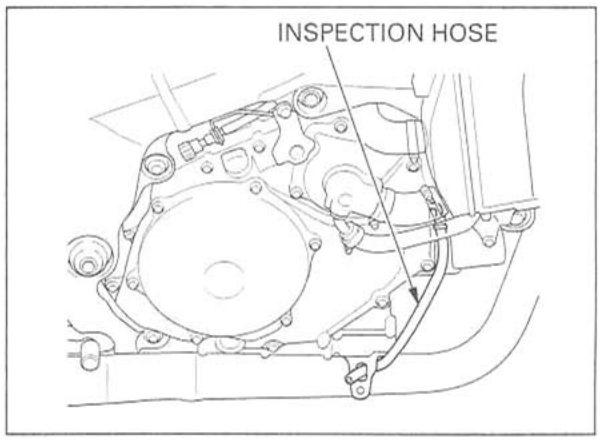

RIGHT CRANKCASE COVER REMOVAL

Drain the engine oil (page 3-15).
Drain the coolant from the system (page 6-5).

Loosen the lower radiator hose band screw.
Remove the six bolts and water pump cover, and disconnect the lower radiator hose from the radiator.

Remove the dowel pins and O-ring.

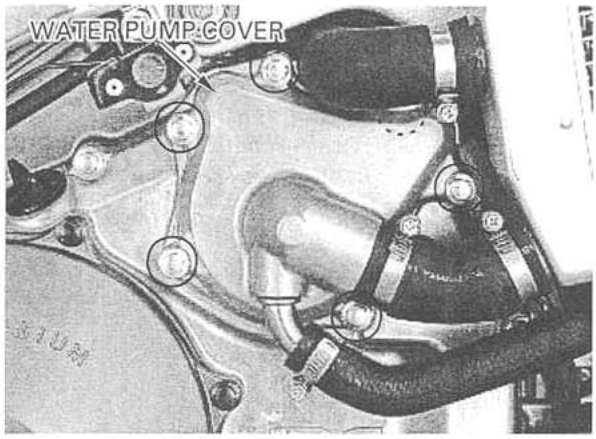

Remove the oil filler cap and clutch cover if the right crankcase cover is replaced.

Remove the 12 bolts, solenoid valve stay (California type only) and the right crankcase cover.

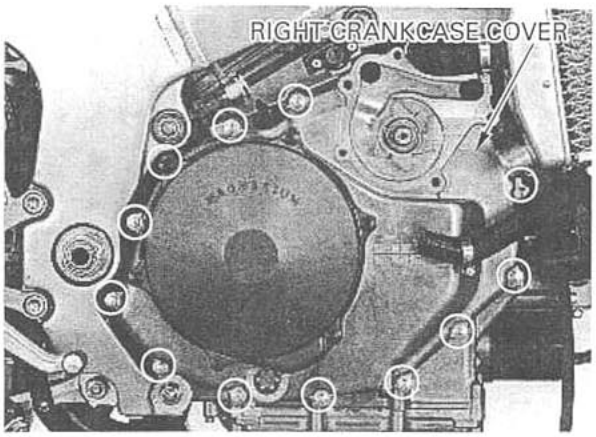

Remove the water joint collars and O-rings.
Remove the dowel pins.
Remove the oil joint collar and O-rings.

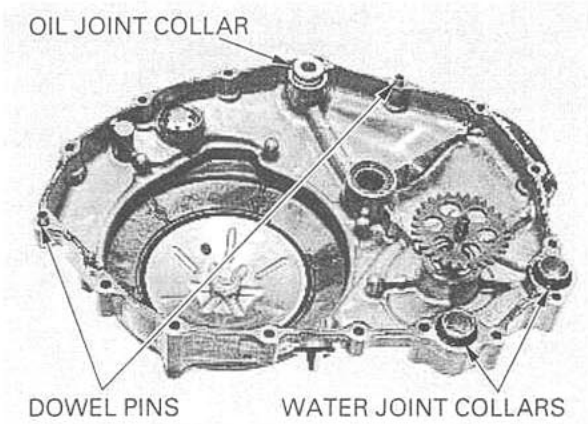

MECHANICAL SEAL REPLACEMENT

Set the right crankcase cover in a hydraulic press by supporting it with the special tool.
Press the impeller shaft out of the water pump gear and remove the gear.
After removing the gear, continue to press the impeller shaft out of the right crankcase cover.

Make sure the right crankcase cover remains perpendicular to the hydraulic press.

TOOL:
Remover base 07965-SD90100

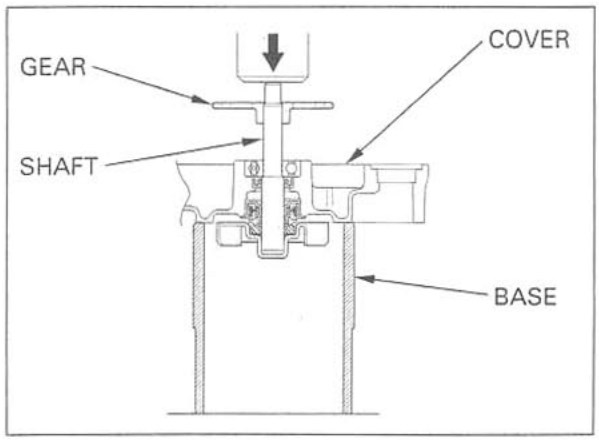

Support the bearing inner race using the special tool and press the impeller shaft in until it is seated, using the special tool.

TOOLS:

Pilot collar, 22 mm	07PAF-0010680 or 07KMF-MT20200
Seal driver, 58 mm	07JAD-PH80101

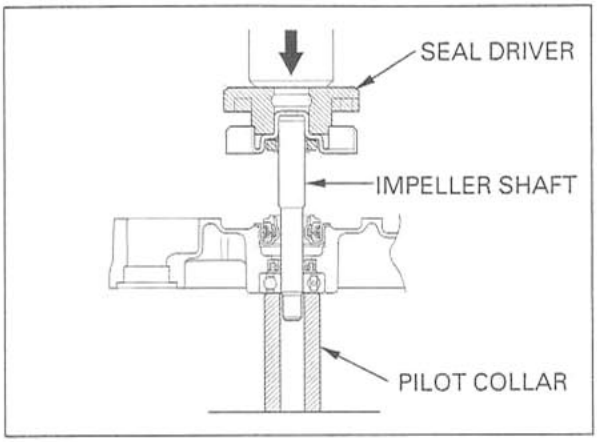

Support the impeller using the special tool and press the water pump gear onto the shaft using the special tool, until the distance between the gear upper surface and cover mating surface is 32.65–33.00 mm (1.285–1.299 in) as shown.

TOOLS:

Pilot collar, 22 mm	07PAF-0010680 or 07KMF-MT20200
Seal driver, 58 mm	07JAD-PH80101

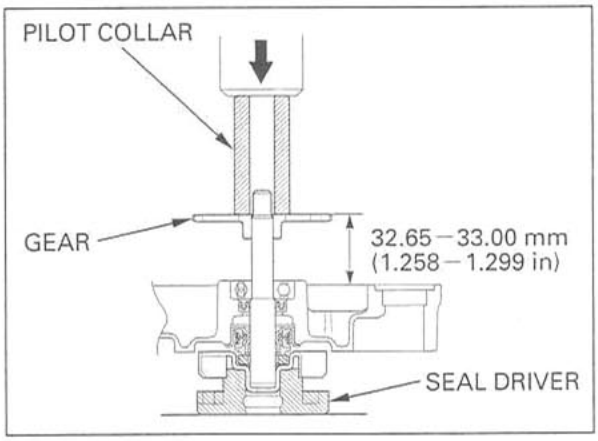

RIGHT CRANKCASE COVER INSTALLATION

Remove the snap ring and oil seal.

Apply oil to a new oil seal lip.
Install the oil seal into the right crankcase cover and secure it with the snap ring.

Check that the sealing surface of the primary drive gear bolt is not scratched or scored.

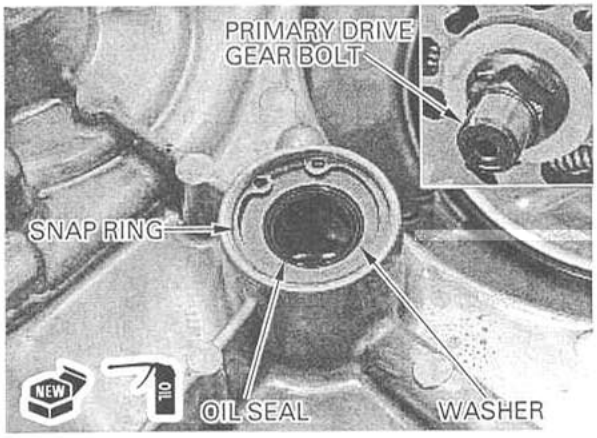

Apply oil to new O-rings and install them into the oil joint collar grooves.
Install the oil joint collar.
Install the water joint collars.
Apply oil to new O-rings and install them onto the water joint collars.
Install the two dowel pins into the crankcase.

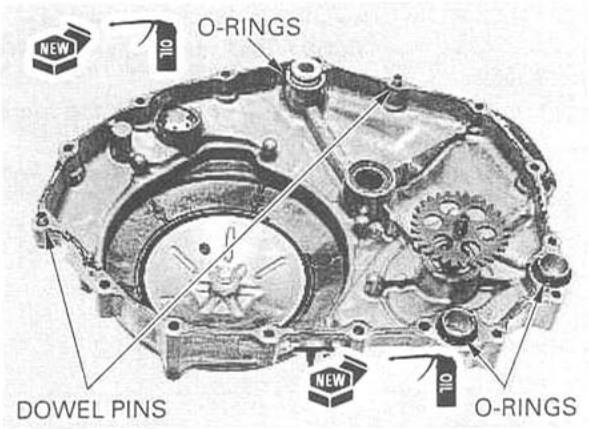

Apply sealant to the crankcase mating surfaces as shown.

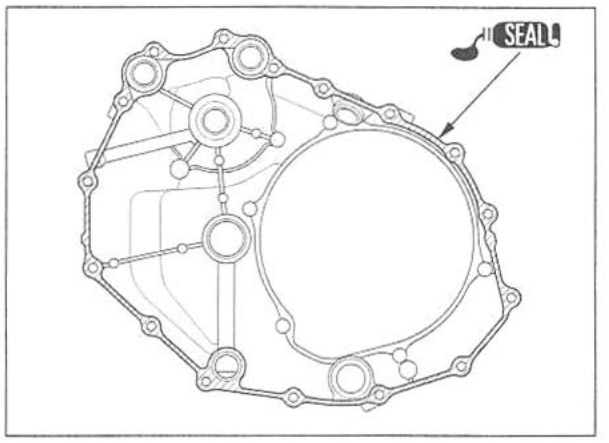

Install the right crankcase cover while turning the water pump impeller to engage the gears. Install the solenoid valve stay (California type only) and bolts, and tighten the bolts in a crisscross pattern in two or three steps.

Install the clutch cover if it was removed (page 9-21).

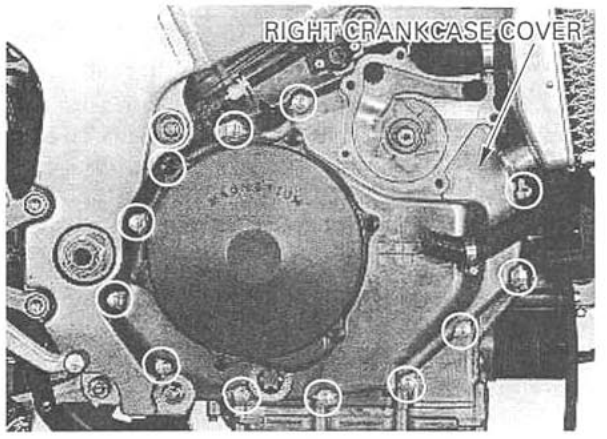

Install a new O-ring into the water pump cover groove.
Install the dowel pins.
Connect the lower radiator hose to the right radiator and install the water pump cover onto the right crankcase cover.

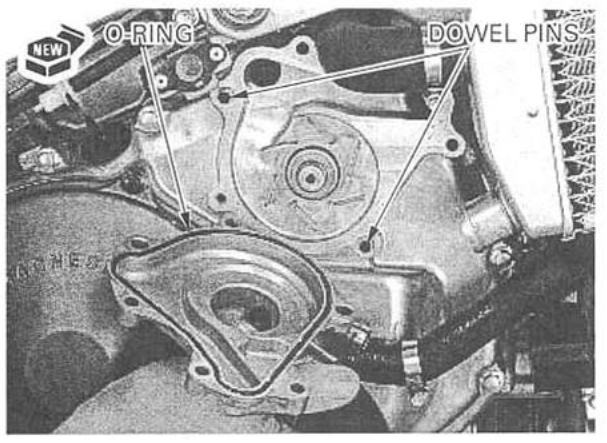

Install and tighten the six bolts.
Tighten the lower radiator hose band screw.

Fill the crankcase with the recommended oil (page 3-16).
Fill and bleed the cooling system (page 6-5).

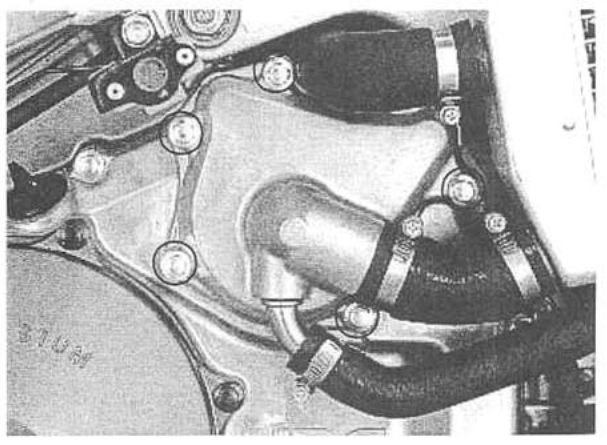

7. ENGINE REMOVAL/INSTALLATION

After '01:

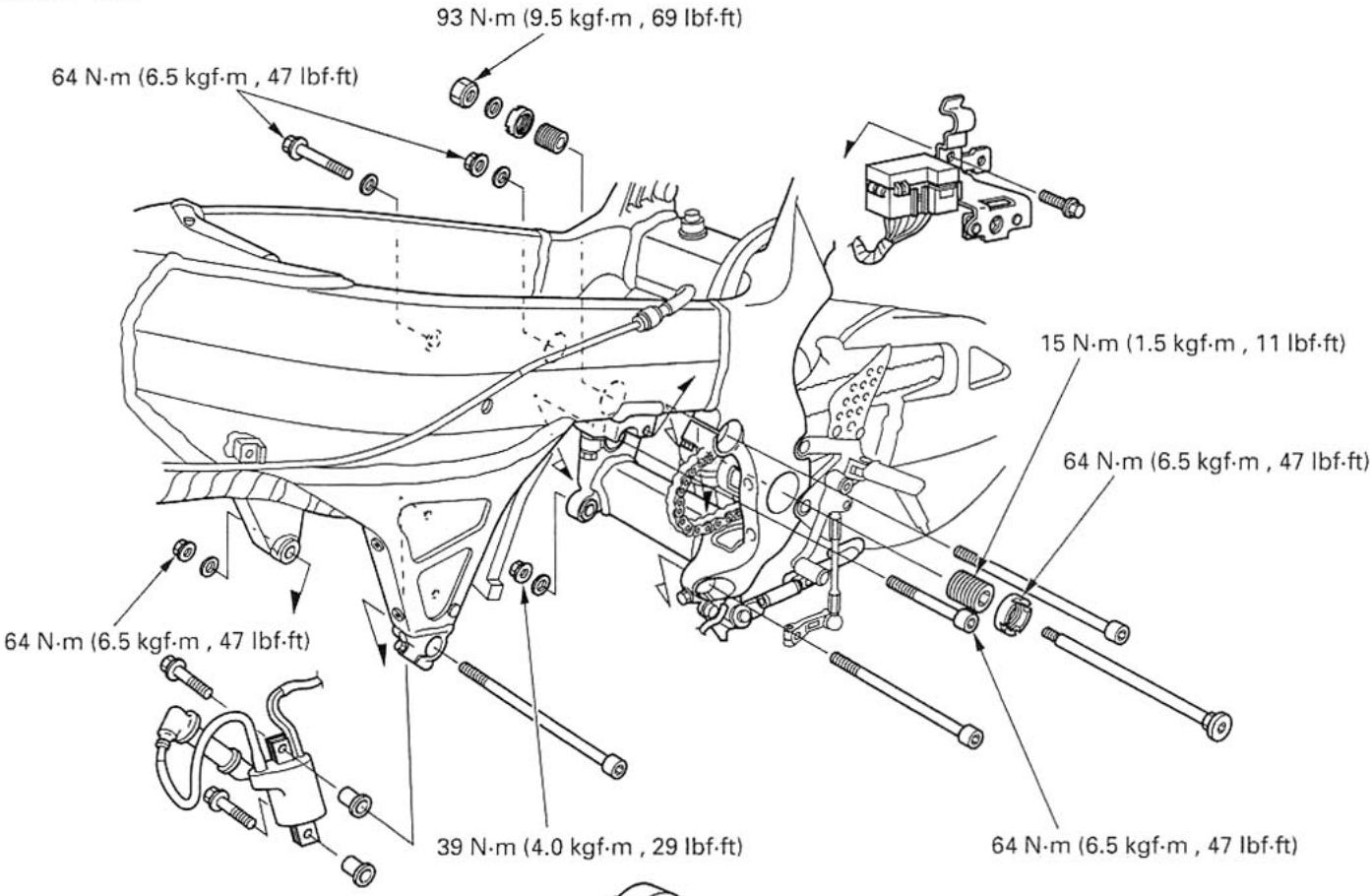

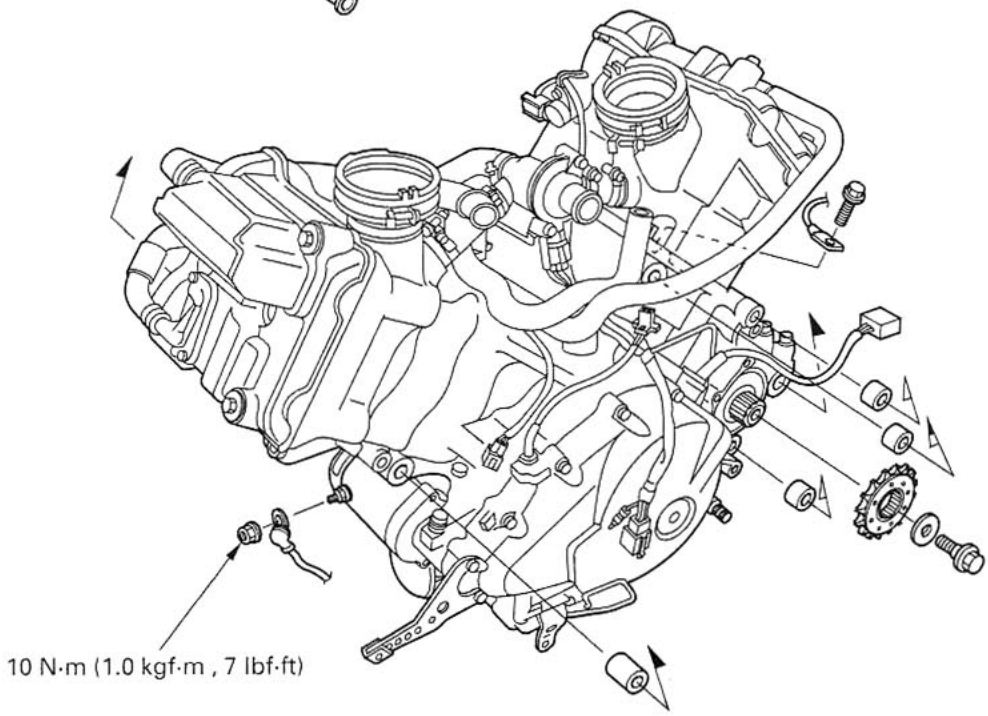

'00 – '01:

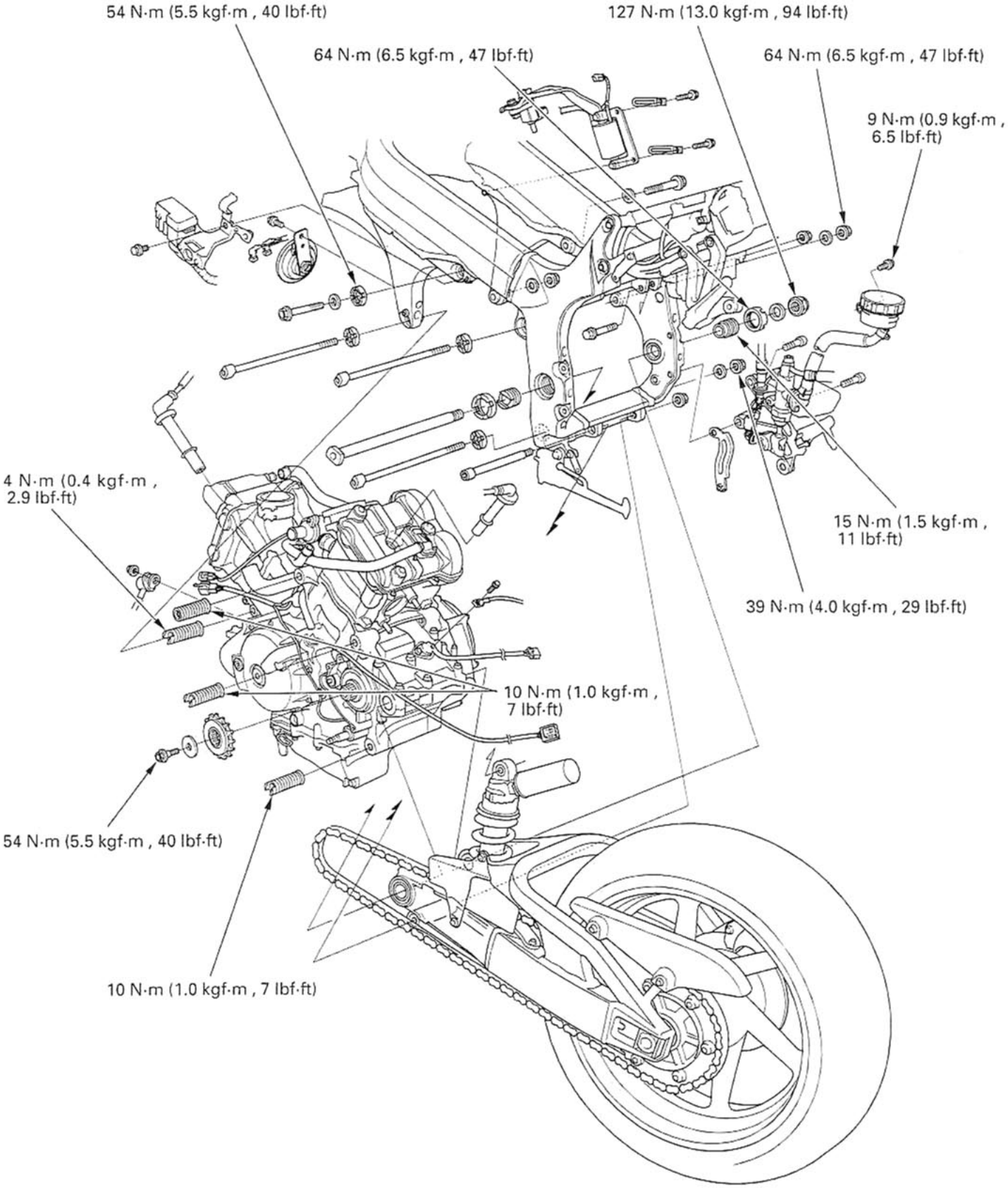
54 N·m (5.5 kgf·m , 40 lbf·ft)
127 N·m (13.0 kgf·m , 94 lbf·ft)
64 N·m (6.5 kgf·m , 47 lbf·ft)
64 N·m (6.5 kgf·m , 47 lbf·ft)
9 N·m (0.9 kgf·m , 6.5 lbf·ft)
4 N·m (0.4 kgf·m , 2.9 lbf·ft)
15 N·m (1.5 kgf·m , 11 lbf·ft)
39 N·m (4.0 kgf·m , 29 lbf·ft)
10 N·m (1.0 kgf·m , 7 lbf·ft)
54 N·m (5.5 kgf·m , 40 lbf·ft)
10 N·m (1.0 kgf·m , 7 lbf·ft)

SERVICE INFORMATION

GENERAL

- A hoist or equivalent is required to support the motorcycle when removing and installing the engine.
- A floor jack or other adjustable support is required to support and maneuver the engine.

NOTICE

Do not use the oil filter as a jacking point.

- When using the lock nut wrench for the adjusting bolt lock nut, use a 20-inch long deflecting beam type torque wrench. The lock nut wrench increases the torque wrench's leverage, so the torque wrench reading will be less than the torque actually applied to the lock nut. The specification given is the actual torque applied to the lock nut, not the reading on the torque wrench. Do not overtighten the lock nut. The specification later in the text gives both actual and indicated.
- The following components require engine removal for service:
  - transmission (section 11)
  - crankshaft/piston/cylinder (section 12)
- When installing the engine, be sure to tighten the engine mounting fasteners to the specified torque in the specified sequence. If you make a mistake with the tightening torque or sequence, loosen all mounting fasteners, then tighten them again to the specified torque in the correct sequence.

'00 – '01 only:

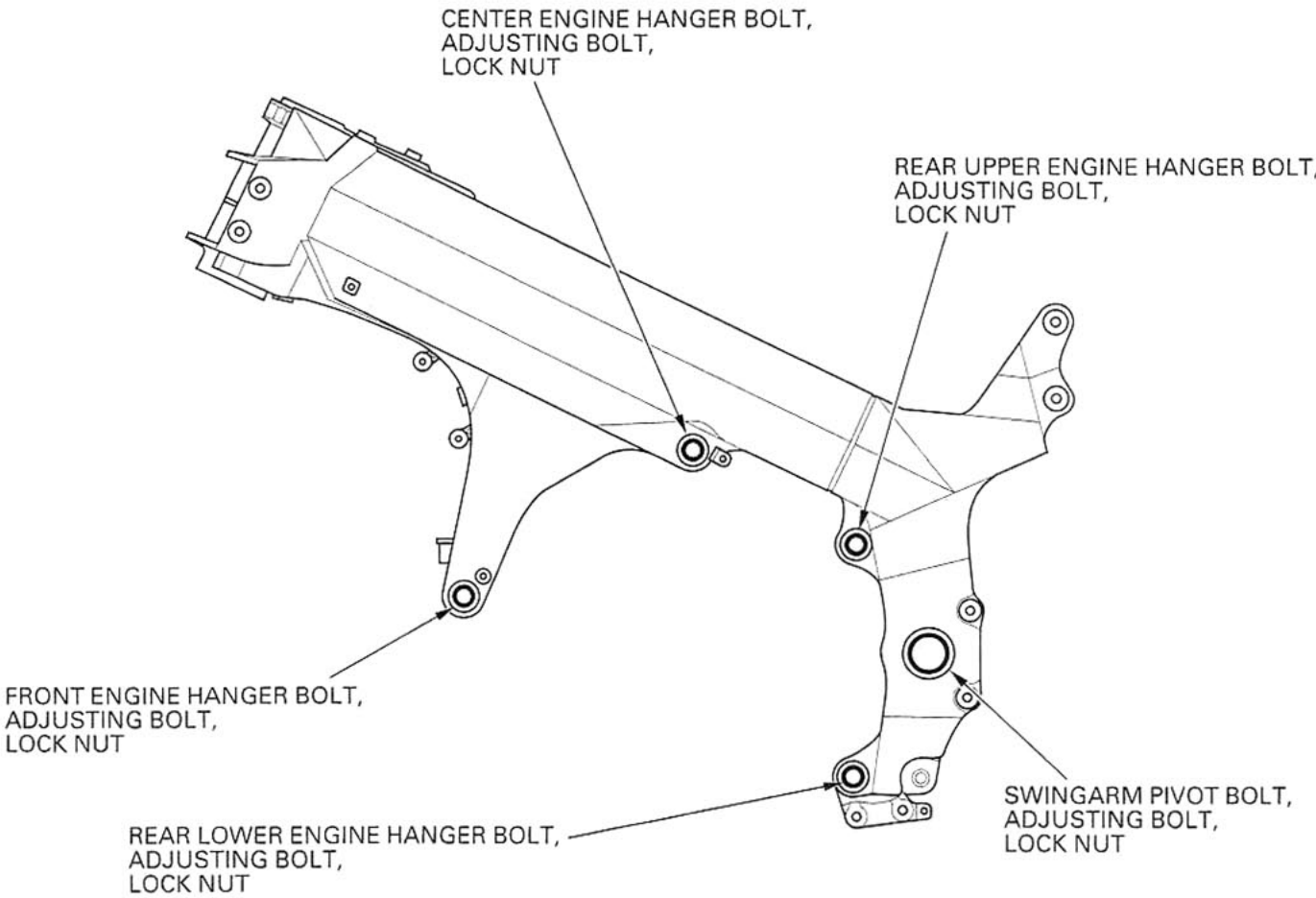

SPECIFICATIONS

ITEM		SPECIFICATIONS
Engine dry weight		70.5 kg (155.4 lbs)
Engine oil capacity after disassembly		4.3 ℓ (4.5 US qt , 3.8 Imp qt)
Coolant capacity (radiator and engine)	('00 – '01)	2.5 ℓ (2.6 US qt , 2.2 Imp qt)
	(After '01)	2.9 ℓ (3.1 US qt , 2.6 Imp qt)

TORQUE VALUES

Front engine hanger adjusting bolt	('00 – '01)	4 N·m (0.4 kgf·m , 2.9 lbf·ft)
Center engine hanger adjusting bolt	('00 – '01)	10 N·m (1.0 kgf·m , 7 lbf·ft)
Rear engine hanger adjusting bolt	('00 – '01)	10 N·m (1.0 kgf·m , 7 lbf·ft)
Engine hanger adjusting bolt lock nut	('00 – '01)	54 N·m (5.5 kgf·m , 40 lbf·ft)
Center engine hanger bolt		64 N·m (6.5 kgf·m , 47 lbf·ft)
Front engine hanger nut		64 N·m (6.5 kgf·m , 47 lbf·ft)
Rear upper engine hanger nut		64 N·m (6.5 kgf·m , 47 lbf·ft)
Rear lower engine hanger nut		39 N·m (4.0 kgf·m , 29 lbf·ft)
Swingarm pivot adjusting bolt		15 N·m (1.5 kgf·m , 11 lbf·ft)
Swingarm pivot adjusting bolt lock nut		64 N·m (6.5 kgf·m , 47 lbf·ft)
Swingarm pivot nut	('00 – '01)	127 N·m (13.0 kgf·m , 94 lbf·ft)
	(After '01)	93 N·m (9.5 kgf·m , 69 lbf·ft)
Shock absorber upper mounting nut		44 N·m (4.5 kgf·m , 33 lbf·ft)
Shock link-to-frame nut		44 N·m (4.5 kgf·m , 33 lbf·ft)
Rider footpeg holder bolt		26 N·m (2.7 kgf·m , 20 lbf·ft)
Rear brake reservoir mounting bolt		9 N·m (0.9 kgf·m , 6.5 lbf·ft)
Drive sprocket bolt		54 N·m (5.5 kgf·m , 40 lbf·ft)
Starter motor cable terminal nut		10 N·m (1.0 kgf·m , 7 lbf·ft)

TOOLS

Lock nut wrench, 20 mm ('00 – '01)	07VMA-MBB0100 or 07VMA-MBB0101
Lock nut wrench, 5.8 × 46 mm ('00 – '01)	07YMA-MCF0100 or 07YMA-MCFA100 (U.S.A.only)

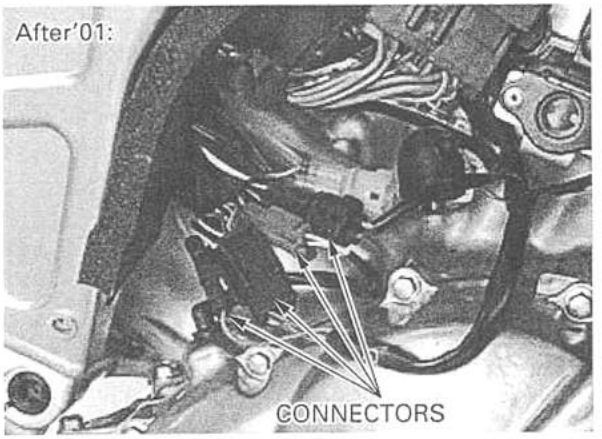

Disconnect the alternator 3P connector and remove the alternator wire from the wire band.
Remove the spark plug cap from the plug.

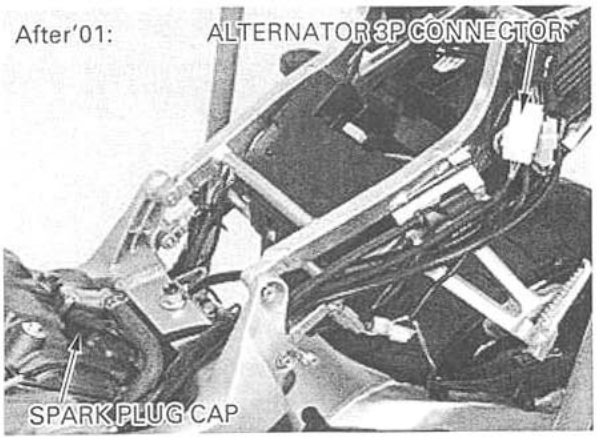

Do not disconnect the clutch hose.

Remove the bolts, choke knob stay, clutch slave cylinder, wire clamp and drive sprocket cover/ guide plate.
To keep the slave cylinder piston from being forced out of the cylinder, squeeze the clutch lever and tie it to the handlebar.
Remove the dowel pins.
Remove the bolt and gearshift arm from the spindle.

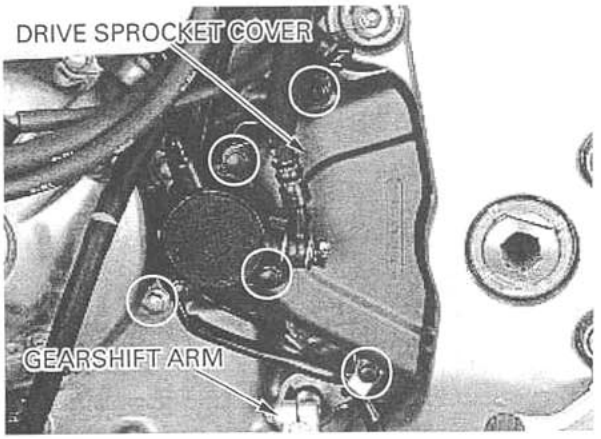

Loosen the rear axle nut, lock nuts and drive chain adjusting bolts.
Remove the drive sprocket bolt, washer and the drive sprocket from the countershaft.

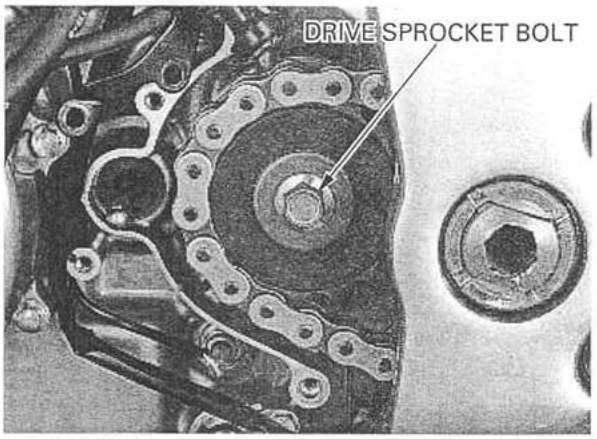

'00– '01: Disconnect the speed sensor 3P connector and rear brake light switch 2P connector.
Remove the wire band.
Remove the bolt and rear brake reservoir.

NOTE:
- Keep the brake reservoir upright to prevent air from entering the hydraulic system.

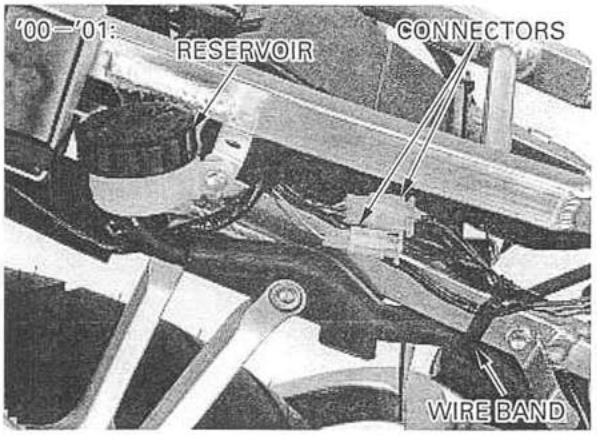

After '01: Disconnect the speed sensor 3p connector.
Remove the wire band.

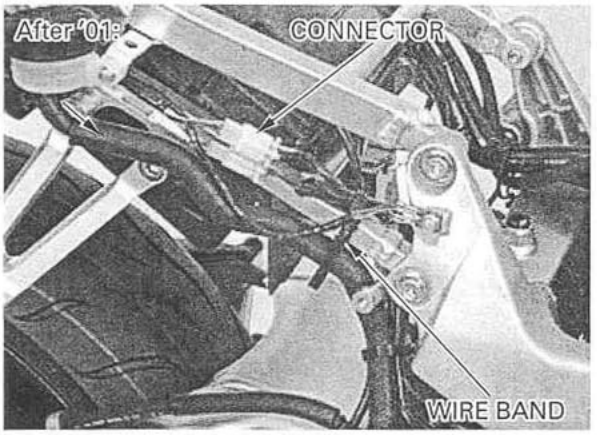

'00– '01: Support the motorcycle securely with a hoist or equivalent.

Remove the shock absorber from the bracket by removing the mounting nut and bolt.

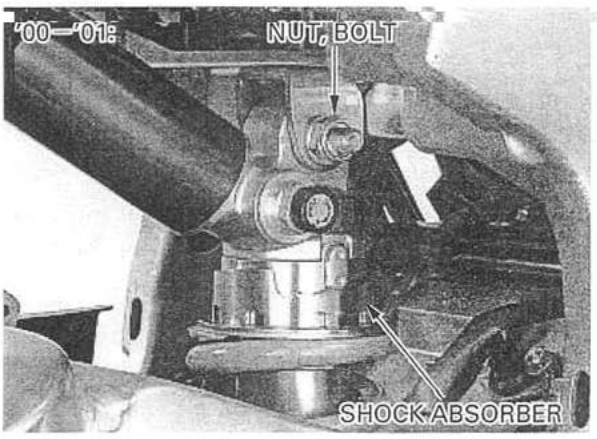

'00–'01: Remove the two socket bolts and right footpeg holder from the frame.

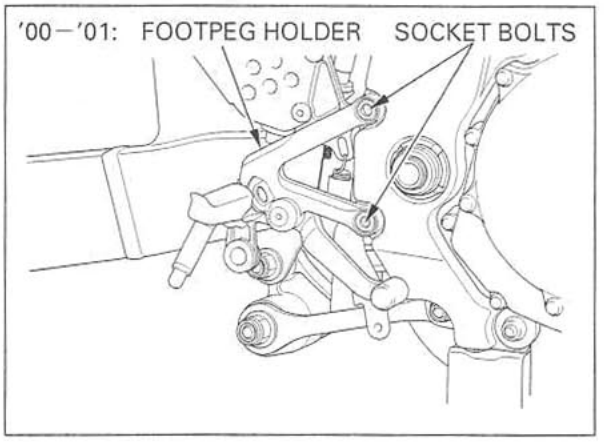

'00–'01: Remove the shock link from the frame by removing the nut and bolt.

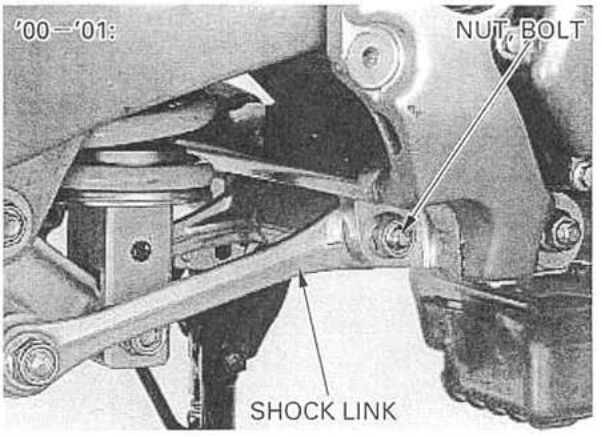

Remove the bolt and fuse box bracket/clutch pipe clamp.

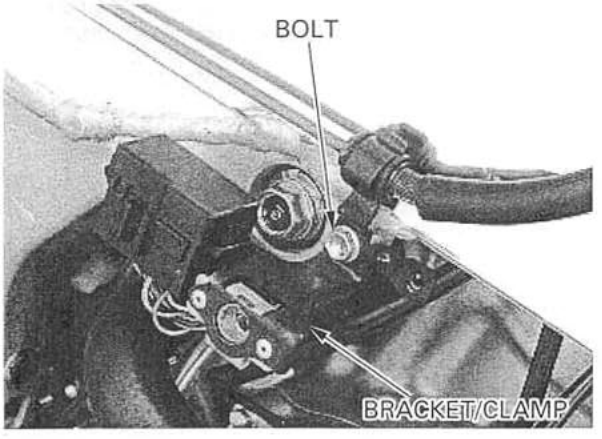

'00–'01:

Place a floor jack or other adjustable support under the engine.

NOTE:

- The jack height must be continually adjusted to relieve stress for ease of bolt removal.

Loosen and remove the front engine hanger nut and rear engine hanger nuts.
Loosen the right center engine hanger bolt.

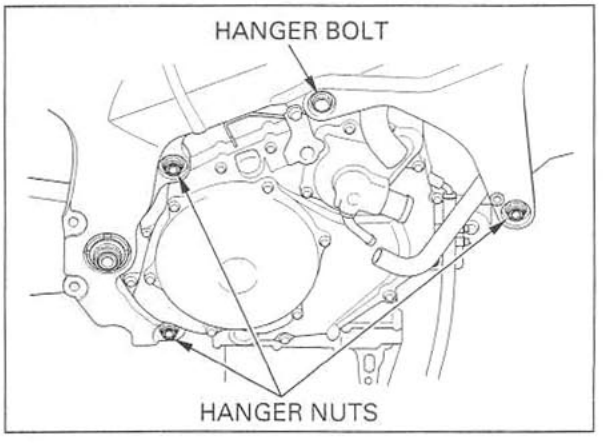

Remove the left center engine hanger bolt.
Loosen each engine hanger adjusting bolt lock nut using the special tool.

TOOL:
Lock nut wrench, 20 mm 07VMA-MBB0100 or 07VMA-MBB0101

Remove the lock nuts.

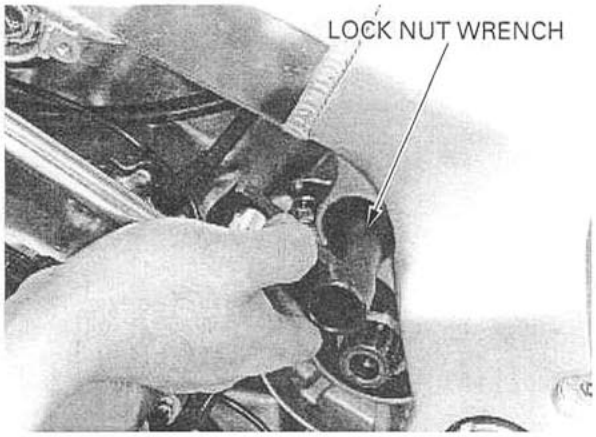

Loosen each engine hanger adjusting bolt.

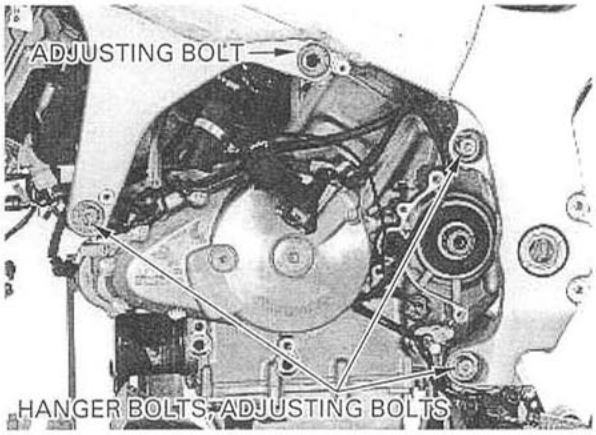

Remove the swingarm pivot bolt (page 14-16).

Remove the swingarm, rear wheel, shock absorber and rear brake system as an assembly.

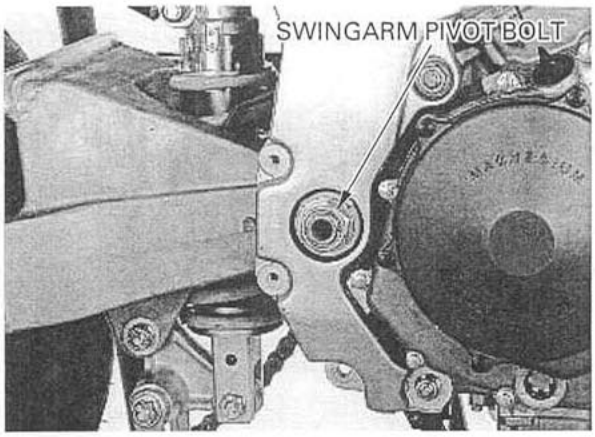

Remove the right center engine hanger bolt.
Remove the front, rear lower and rear upper engine hanger bolts, then remove the engine from the frame.
Remove the engine hanger adjusting bolts from the frame.

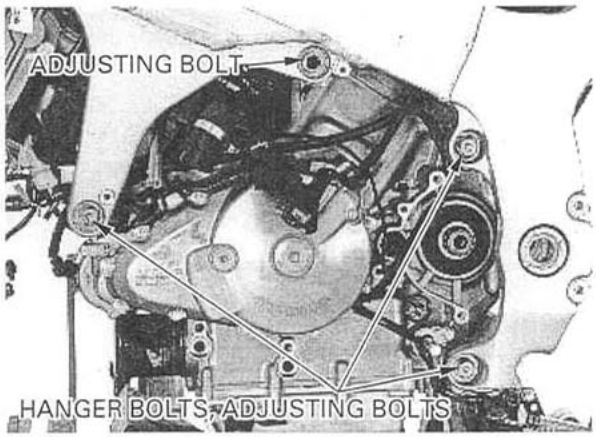

After '01:

Place a floor jack or other adjustable support under the engine.

NOTE:
- The jack height must be continually adjusted to relieve stress for ease of bolt removal.

Loosen the engine hanger pinch bolts in the specified sequence as follows:
- rear lower
- rear upper
- front
- center

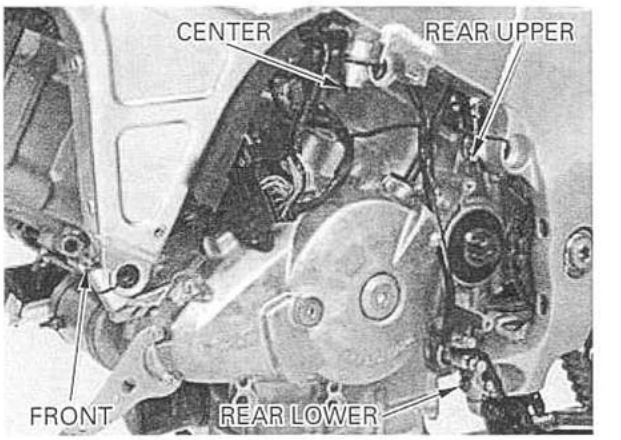

Remove the engine hanger nuts and washers in the specified sequence as follows:
- front
- rear lower

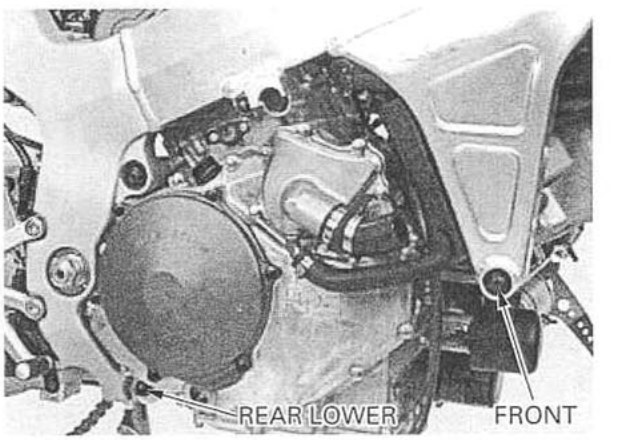

Loosen the left center engine hanger bolt.

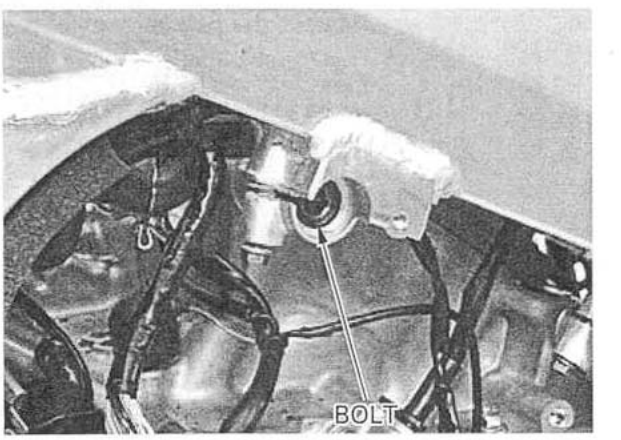

Remove the swingarm pivot nut and washer.

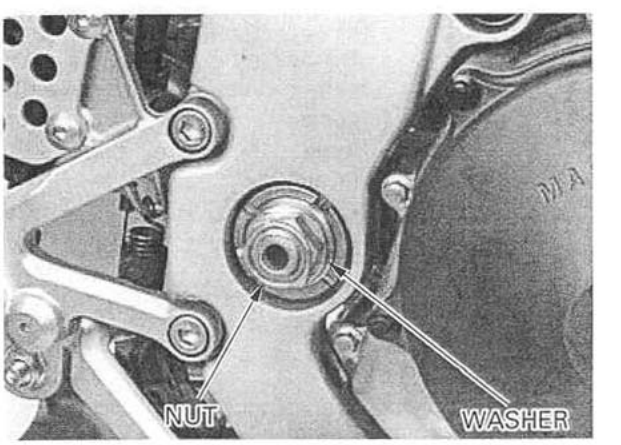

Loosen the left swingarm pivot lock nut with the special tool.

TOOL:

Lock nut wrench, 5.8 × 46 mm	07YMA-MCF0100 or 07YMA-MCFA100 (U.S.A. only)

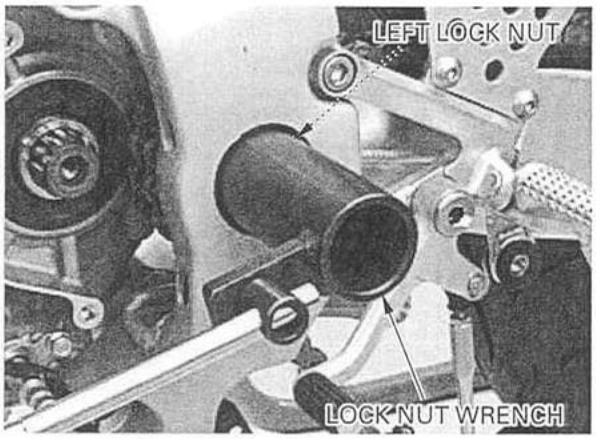

Loosen the left swingarm pivot adjusting bolt.

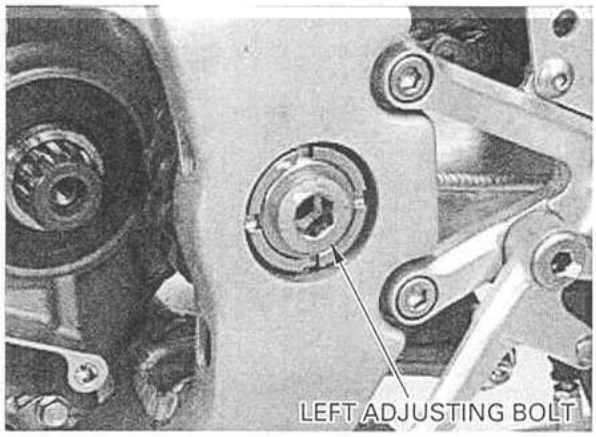

Loosen the right swingarm pivot lock nut with the special tool.

TOOL:

Lock nut wrench, 5.8 × 46 mm	07YMA-MCF0100 or 07YMA-MCFA100 (U.S.A. only)

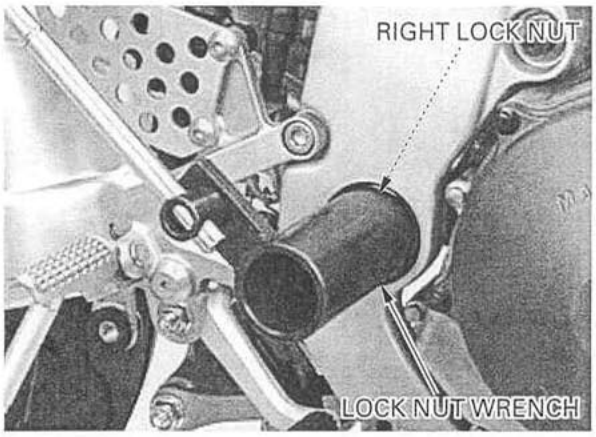

Loosen the right swingarm pivot adjusting bolt.

Remove the rear upper engine hanger nut.

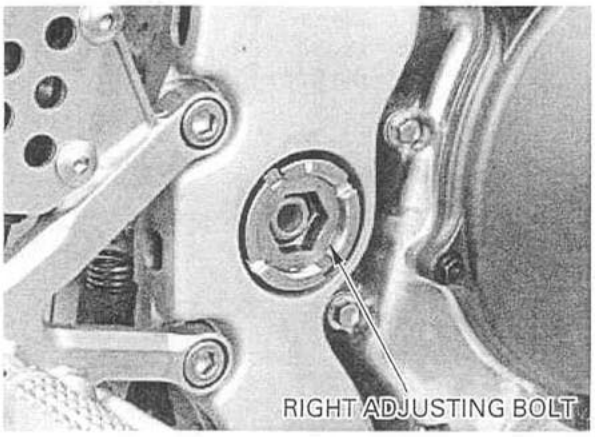

Remove the right center engine hanger bolt and washer.

Remove the engine hanger bolts and distance collars in the specified sequence as follows:
– front
– rear lower

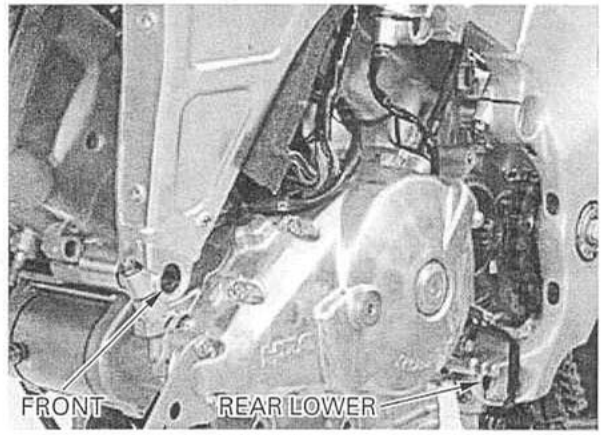

Remove the left center engine hanger bolt and distance collar.

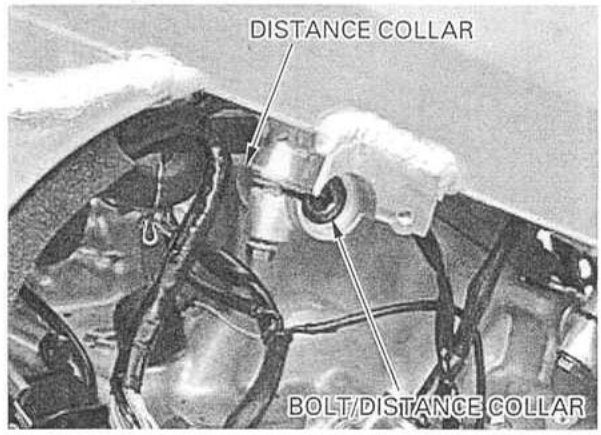

Remove the swingarm pivot bolt and rear upper engine hanger bolt, then remove the engine from the frame.

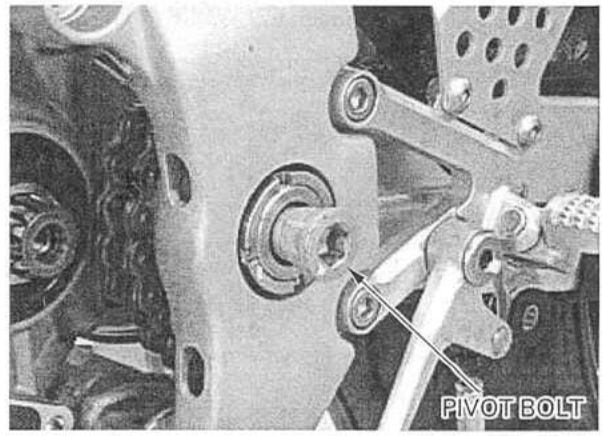

12. Tighten the left center engine hanger adjusting bolt.

    TORQUE: 10 N·m (1.0 kgf·m , 7 lbf·ft)

Tighten the adjusting bolt with the engine hanger bolt.

Tighten the front engine hanger adjusting bolt until it contacts the engine.

TORQUE: 4 N·m (0.4 kgf·m , 2.9 lbf·ft)

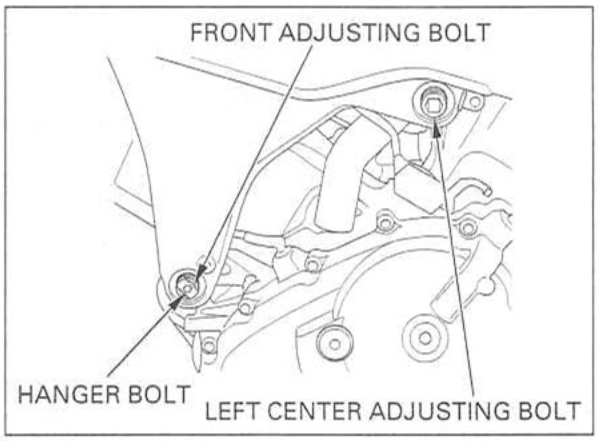

13. Install the lock nuts onto the front and center engine hanger adjusting bolts.
    Hold the center engine hanger adjusting bolt and tighten the lock nut using the special tool.

    TOOL:
    Lock nut wrench, 20 mm 07VMA-MBB0100 or 07VMA-MBB0101

    TORQUE: **Actual:** 54 N·m (5.5 kgf·m , 40 lbf·ft)
    Indicated: 49 N·m (5.0 kgf·m , 36 lbf·ft)

Hold the adjusting bolt with the engine hanger bolt.

Tighten the front engine hanger adjusting bolt lock nut in the same procedure.

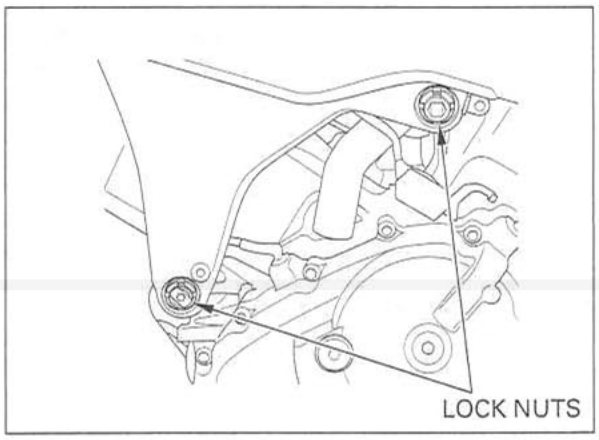

14. Install and tighten the front engine hanger nut.

    TORQUE: 64 N·m (6.5 kgf·m , 47 lbf·ft)

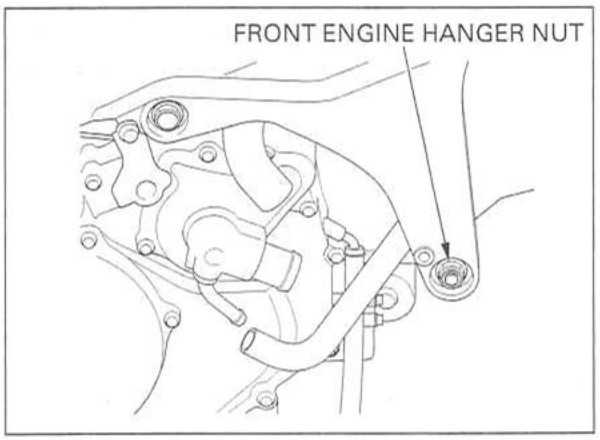

15. Install and tighten the left center engine hanger bolt to the specified torque.

    TORQUE: 64 N·m (6.5 kgf·m , 47 lbf·ft)

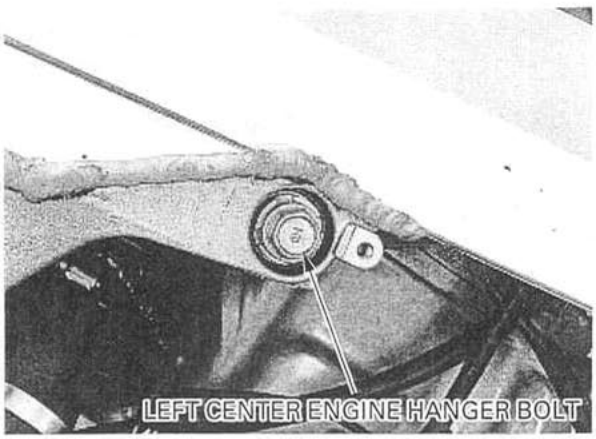

After '01:

1. Screw the swingarm pivot adjusting bolts loosely into the frame. Do not allow the adjusting bolts to protrude into the inside of the frame.
2. Install the engine.
3. Insert the swingarm pivot bolt from the left side until it reaches into the right adjusting bolt.

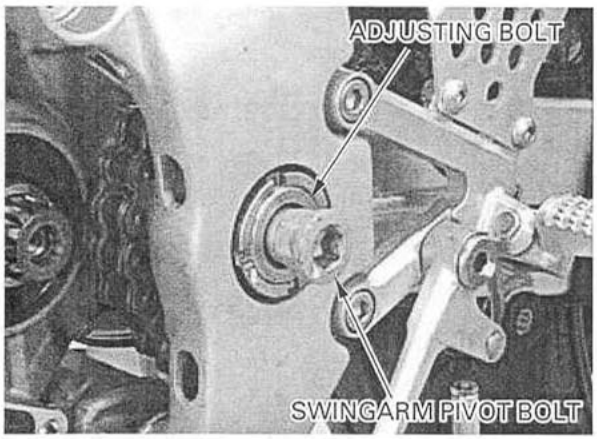

4. Temporarily install the distance collar and left center engine hanger bolt.

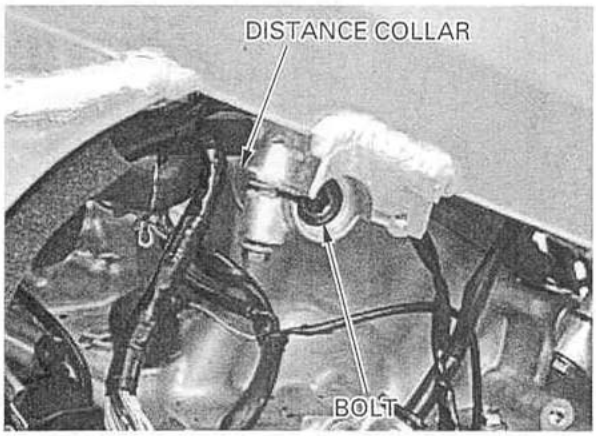

5. Temporarily install the distance collars and engine hanger bolts in the specified sequence as follows:
   - rear upper
   - rear lower
   - front

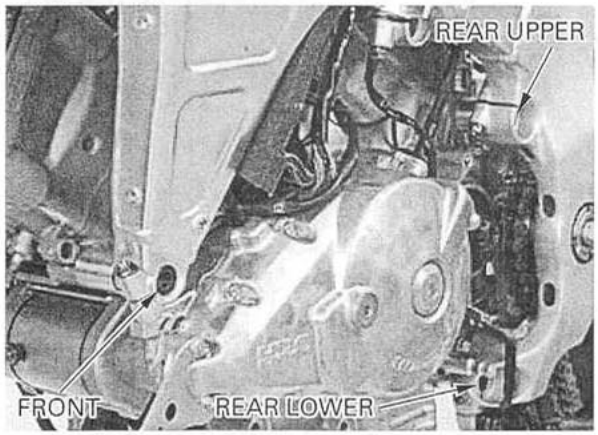

6. Tighten the right center engine hanger bolt with the washer to the specified torque.

   TORQUE: 64 N·m (6.5 kgf·m , 47 lbf·ft)

7. Tighten the rear upper engine hanger nut with the washer to the specified torque.

   TORQUE: 64 N·m (6.5 kgf·m , 47 lbf·ft)

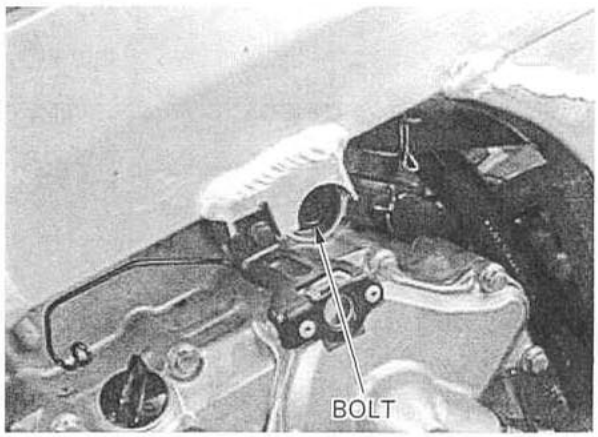

8. Tighten the right swingarm pivot adjusting bolt to the specified torque.

TORQUE: 15 N·m (1.5 kgf·m , 11 lbf·ft)

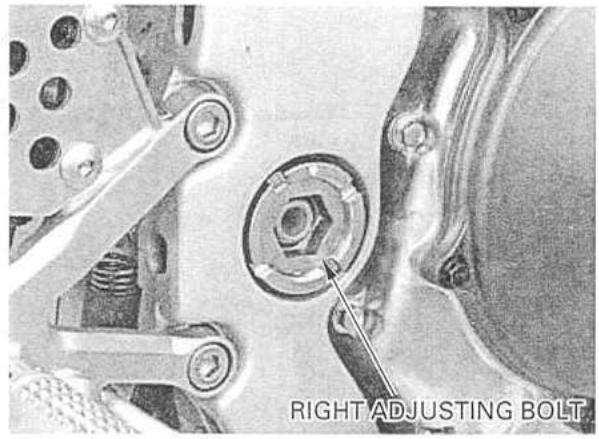

9. Hold the right swingarm pivot adjusting bolt and tighten the right lock nut using the special tool.

TOOL:
Lock nut wrench, 5.8 × 46 mm 07YMA-MCF0100
or
07YMA-MCFA100
(U.S.A. only)

TORQUE: Actual: 64 N·m (6.5 kgf·m , 47 lbf·ft)
Indicated: 58 N·m (5.9 kgf·m , 43 lbf·ft)

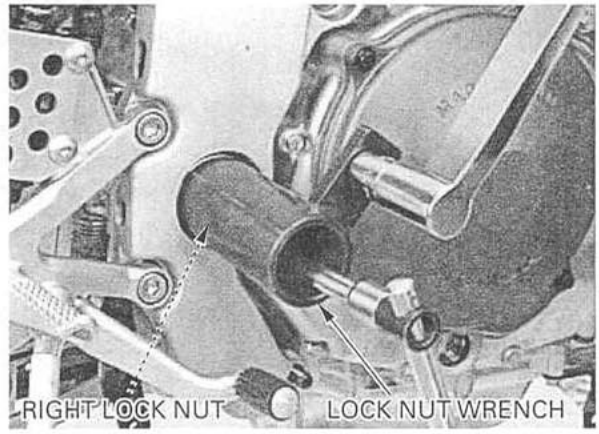

10. Tighten the left swingarm pivot adjusting bolt to the specified torque.

TORQUE: 15 N·m (1.5 kgf·m , 11 lbf·ft)

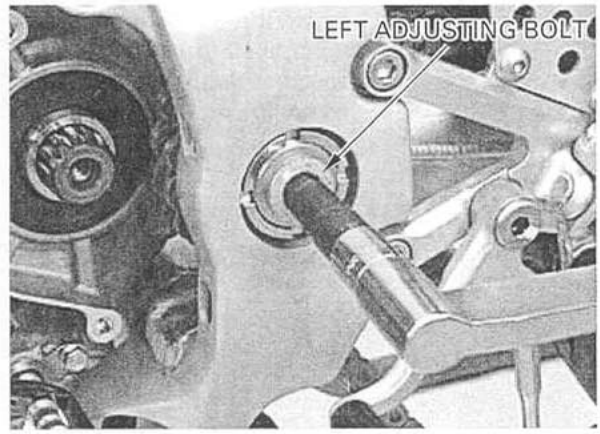

11. Hold the left swingarm pivot adjusting bolt and tighten the left swingarm pivot lock nut, using the special tool.

TOOL:
Lock nut wrench, 5.8 × 46 mm 07YMA-MCF0100
or
07YMA-MCFA100
(U.S.A. only)

TORQUE: Actual: 64 N·m (6.5 kgf·m , 47 lbf·ft)
Indicated: 58 N·m (5.9 kgf·m , 43 lbf·ft)

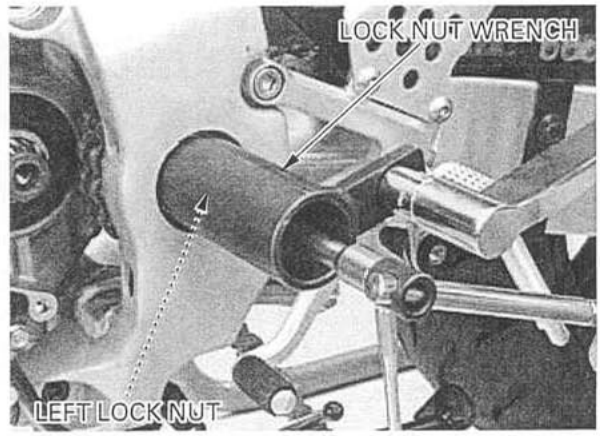

12. Install the washer and swingarm pivot nut, and tighten the nut.

TORQUE: 93 N·m (9.5 kgf·m , 69 lbf·ft)

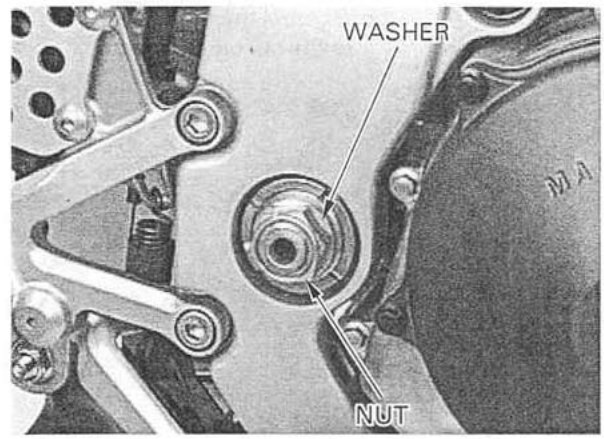

13. Tighten the left center engine hanger bolt to the specified torque.

TORQUE: 64 N·m (6.5 kgf·m , 47 lbf·ft)

14. Install the washers and engine hanger nuts, and tighten the nuts to the specified torque in the specified sequence as follows:
   - rear lower
   - front

TORQUE:
Front: 64 N·m (6.5 kgf·m , 47 lbf·ft)
Rear lower: 39 N·m (4.0 kgf·m , 29 lbf·ft)

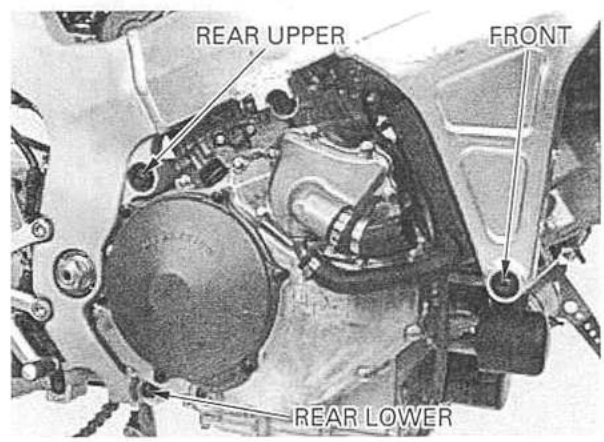

15. Tighten the engine hanger pinch bolts in the specified sequence as follows:
   - center
   - front
   - rear upper
   - rear lower

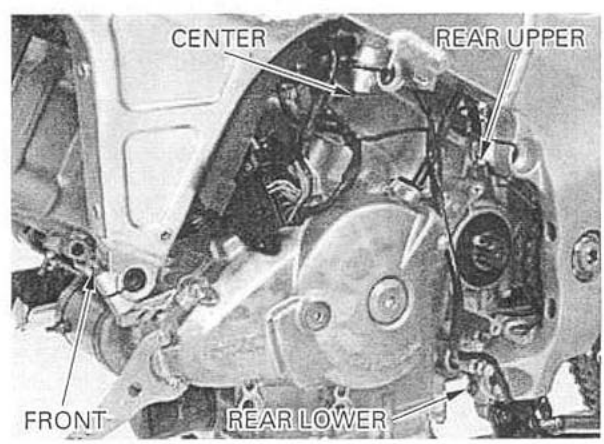

Install the fuse box bracket/clutch pipe clamp and tighten the bolt securely.

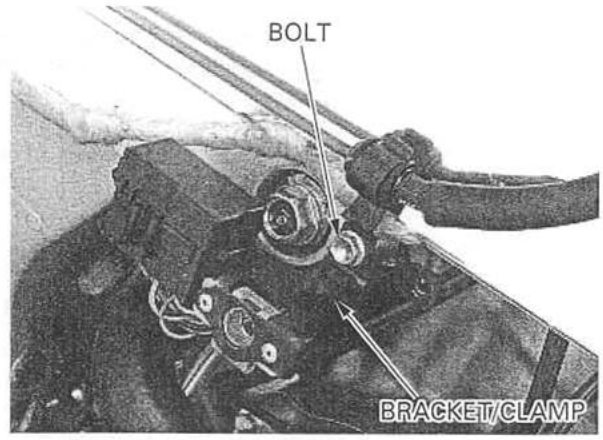

'00–'01: Install the shock link onto the frame with the bolt and nut, and tighten the nut.

TORQUE: 44 N·m (4.5 kgf·m , 33 lbf·ft)

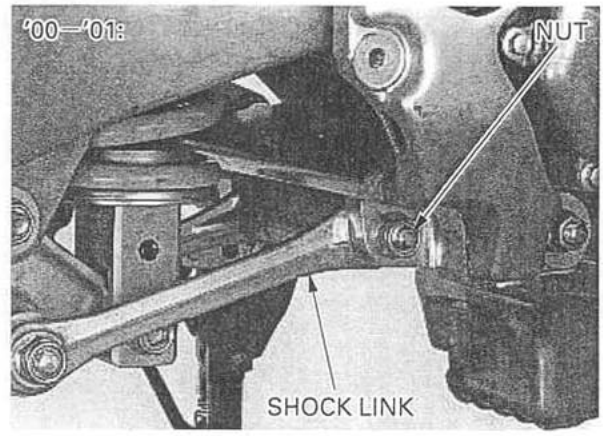

'00–'01: Install the right rider footpeg holder onto the frame and tighten the two socket bolt.

TORQUE: 26 N·m (2.7 kgf·m , 20 lbf·ft)

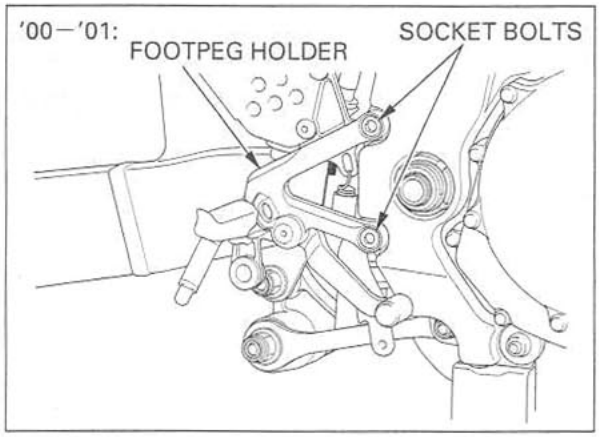

'00–'01: Install the shock absorber onto the upper mounting bracket with the bolt and nut, and tighten the nut.

TORQUE: 44 N·m (4.5 kgf·m , 33 lbf·ft)

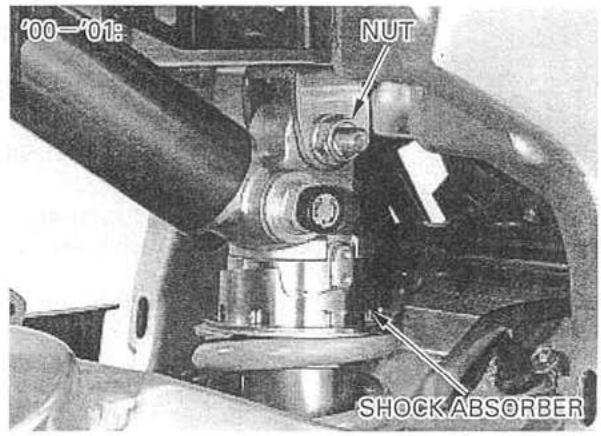

'00– '01: Route the rear brake reservoir hose, brake light switch wire and speed sensor wire properly (page 1-27).

Install the rear brake reservoir and tighten the mounting bolt.

TORQUE: 9 N·m (0.9 kgf·m , 6.5 lbf·ft)

Connect the rear brake light switch connector and speed sensor wire connector.
Install the wire band.

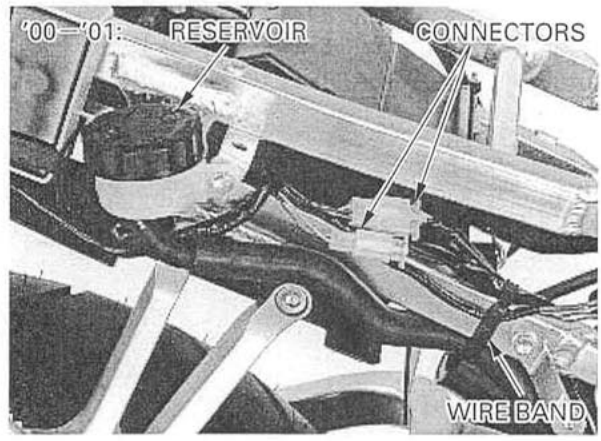

After '01: Connect the speed sensor 3P connector.
Install the wire band.

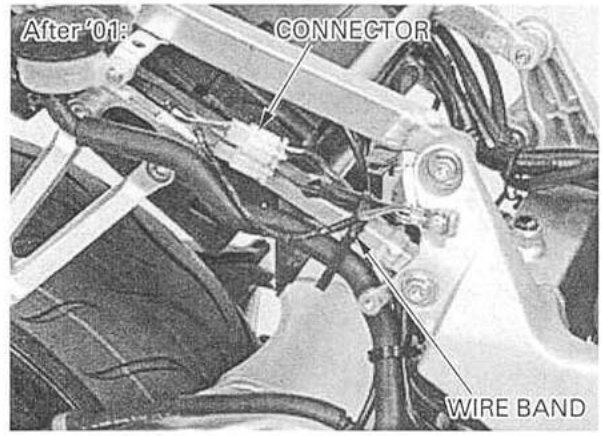

Install the drive sprocket with the drive chain onto the countershaft.
Install the washer and bolt, and tighten the bolt.

TORQUE: 54 N·m (5.5 kgf·m , 40 lbf·ft)

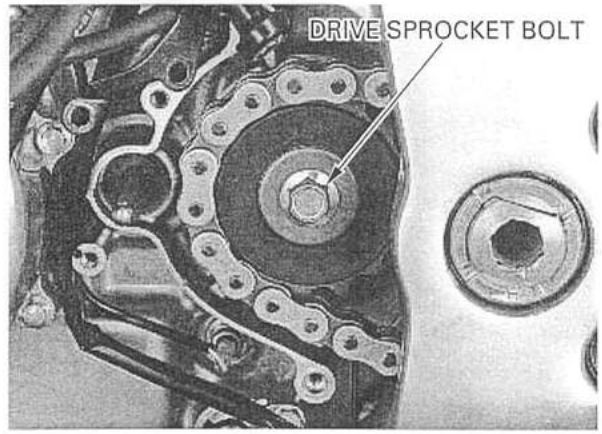

Install the dowel pins and drive sprocket cover/ guide plate.
Install the dowel pins and a new gasket for the clutch slave cylinder.
Install the clutch slave cylinder, choke knob stay, wire clamp and bolts.
Tighten the bolts securely.
Release the clutch lever from the handlebar.

Install the gearshift arm onto the spindle (page 9-23).

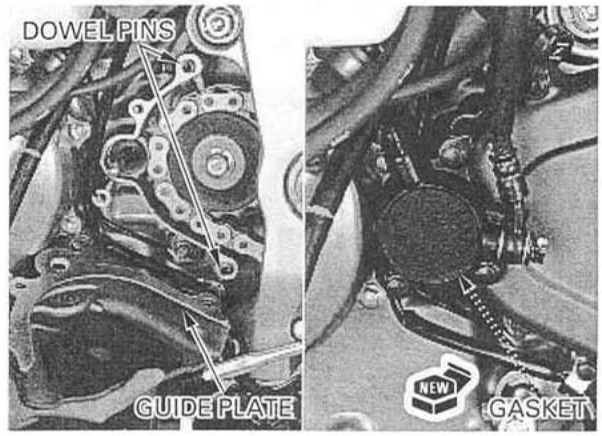

Install the rear spark plug cap.

Route the alternator wire properly (page 1-35, 1-36).

Connect the alternator 3P connector.

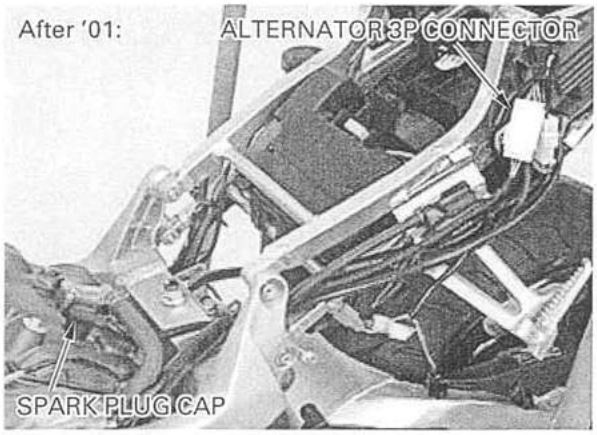

Connect the following:
- ignition pulse generator connector
- engine wire harness connector
- pulse secondary air injection (PAIR) control solenoid valve connector
- oil pressure switch connector (After '01)

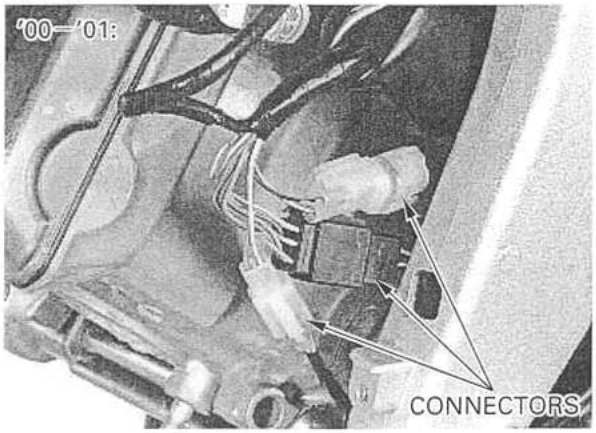

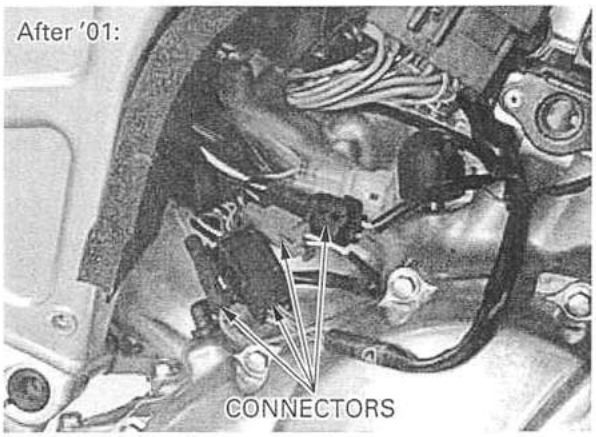

Connect the starter motor cable.
Install and tighten the terminal nut.

TORQUE: 10 N·m (1.0 kgf·m , 7 lbf·ft)

Install the rubber cap securely.

'00– '01: Install the horn, tighten the bolt and connect the horn wire connectors.

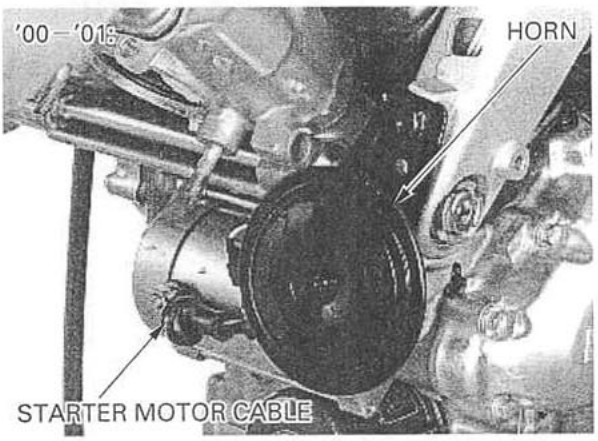

After '01: Connect the vacuum hoses to the vacuum tank.

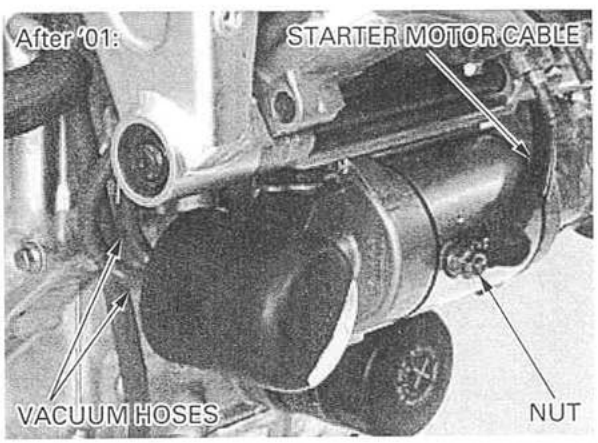

'00 – '01:
Connect the ignition coil connector.
Install the ignition coil/solenoid valve with the brackets onto the frame and tighten the bracket bolts.
Install the spark plug cap onto the plug.
Connect the connector and vacuum hoses to the intake air control solenoid valve.

Route the wires and hoses properly (page 1-25, 1-35).

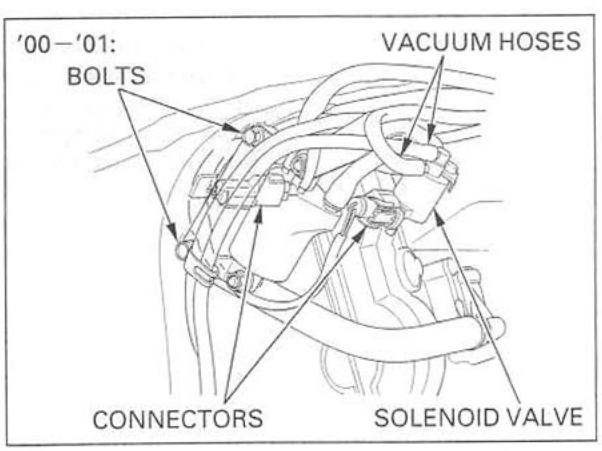

After '01:
Install the front spark plug cap onto the plug.
Connect the ignition coil connector.
Install the front ignition coil, collars and two ignition coil mounting bolts, and tighten the bolts.

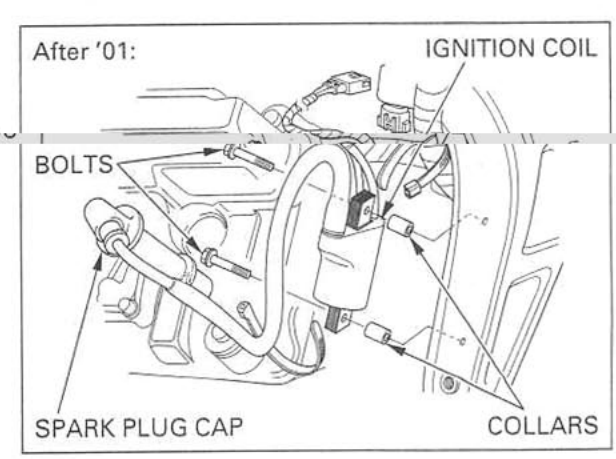

After '01: Install the air guide plate and two nuts, and tighten the two nuts.

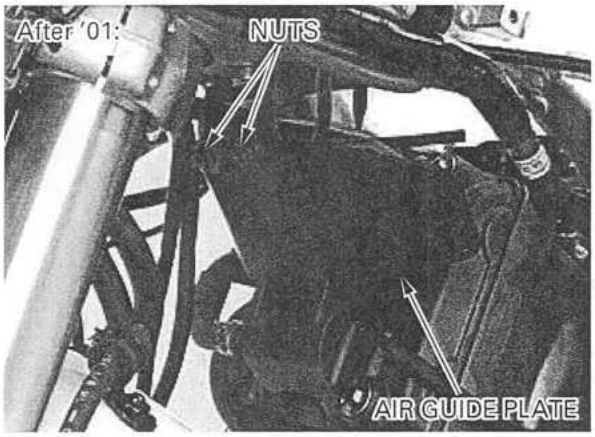

Install the battery ground cable and tighten the bolt.

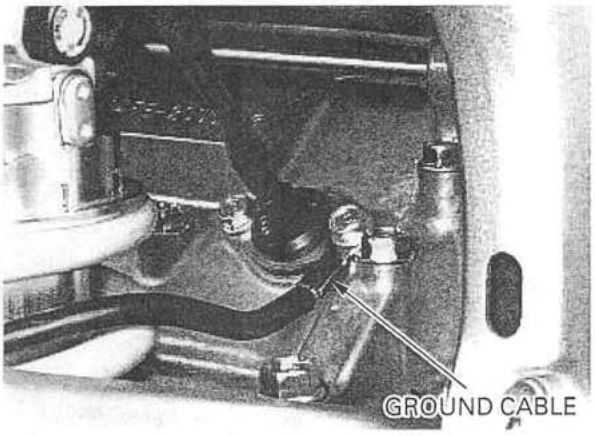

Install the following:
- upper radiator hose onto the thermostat housing
- crankcase breather storage tank and hose
- radiator connector hose
- radiator reserve tank (page 6-11)
- left and right radiators (page 6-6)
- throttle body (page 5-72)
- exhaust system (page 2-7)
- oil cooler (page 4-10)

Fill the crankcase with the recommended oil (page 3-15).
Fill and bleed the cooling system (page 6-5).
Adjust the drive chain (page 3-20).

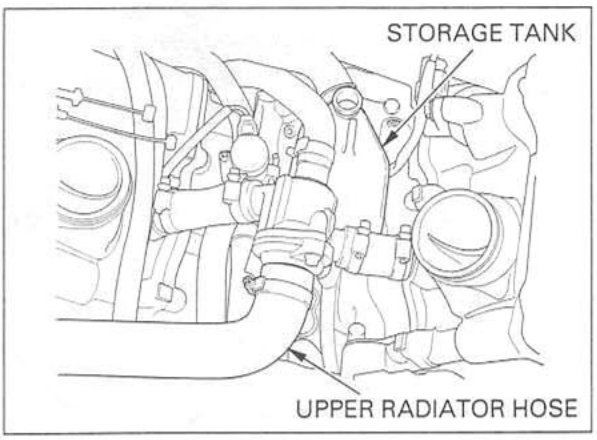

8. CYLINDER HEAD/VALVE

SERVICE INFORMATION

GENERAL

- This section covers service of the camshafts, cylinder head and valves.
- The camshafts, cylinder head and valves can be serviced with the engine installed in the frame.
- When disassembling, mark and store the disassembled parts to ensure that they are reinstalled in their original locations.
- Clean all disassembled parts with cleaning solvent and dry them by blowing them off with compressed air before inspection.
- Camshaft lubricating oil is fed through oil passages in the cylinder head. Clean the oil passages before assembling the cylinder head.
- Be careful not to damage the mating surfaces when removing the cylinder head cover and cylinder head.

8

SPECIFICATIONS

Unit: mm (in)

ITEM			STANDARD	SERVICE LIMIT
Cylinder compression at 350 rpm			1,216 kPa (12.4 kgf/cm², 176 psi)	———
Valve clearance		IN	0.16 ± 0.03 (0.006 ± 0.001)	———
		EX	0.31 ± 0.03 (0.012 ± 0.001)	———
Camshaft	Cam lobe height	IN	39.180 – 39.340 (1.5425 – 1.5488)	38.880 (1.5307)
		EX	38.730 – 38.890 (1.5248 – 1.5311)	38.430 (1.5130)
	Runout		———	0.05 (0.002)
	Oil clearance		0.020 – 0.062 (0.0008 – 0.0024)	0.100 (0.0039)
Valve lifter	Valve lifter O.D.		33.978 – 33.993 (1.3377 – 1.3383)	33.97 (1.337)
	Valve lifter bore I.D.		34.010 – 34.026 (1.3390 – 1.3396)	34.04 (1.340)
Valve, Valve guide	Valve stem O.D.	IN	5.975 – 5.990 (0.2352 – 0.2358)	5.965 (0.2348)
		EX	5.965 – 5.980 (0.2348 – 0.2354)	5.955 (0.2344)
	Valve guide I.D.	IN/EX	6.000 – 6.012 (0.2362 – 0.2367)	6.040 (0.2378)
	Stem-to-guide clearance	IN	0.010 – 0.037 (0.0004 – 0.0015)	0.075 (0.0030)
		EX	0.020 – 0.047 (0.0008 – 0.0019)	0.085 (0.0033)
	Valve guide projection above cylinder head		14.0 – 14.2 (0.55 – 0.56)	———
	Valve seat width	IN	1.1 – 1.3 (0.04 – 0.05)	1.7 (0.07)
		EX	1.3 – 1.5 (0.05 – 0.06)	1.9 (0.07)
Valve spring	Free length	Inner	41.0 (1.61)	40.0 (1.57)
		Outer	45.8 (1.80)	44.8 (1.76)
Cylinder head warpage			———	0.10 (0.004)

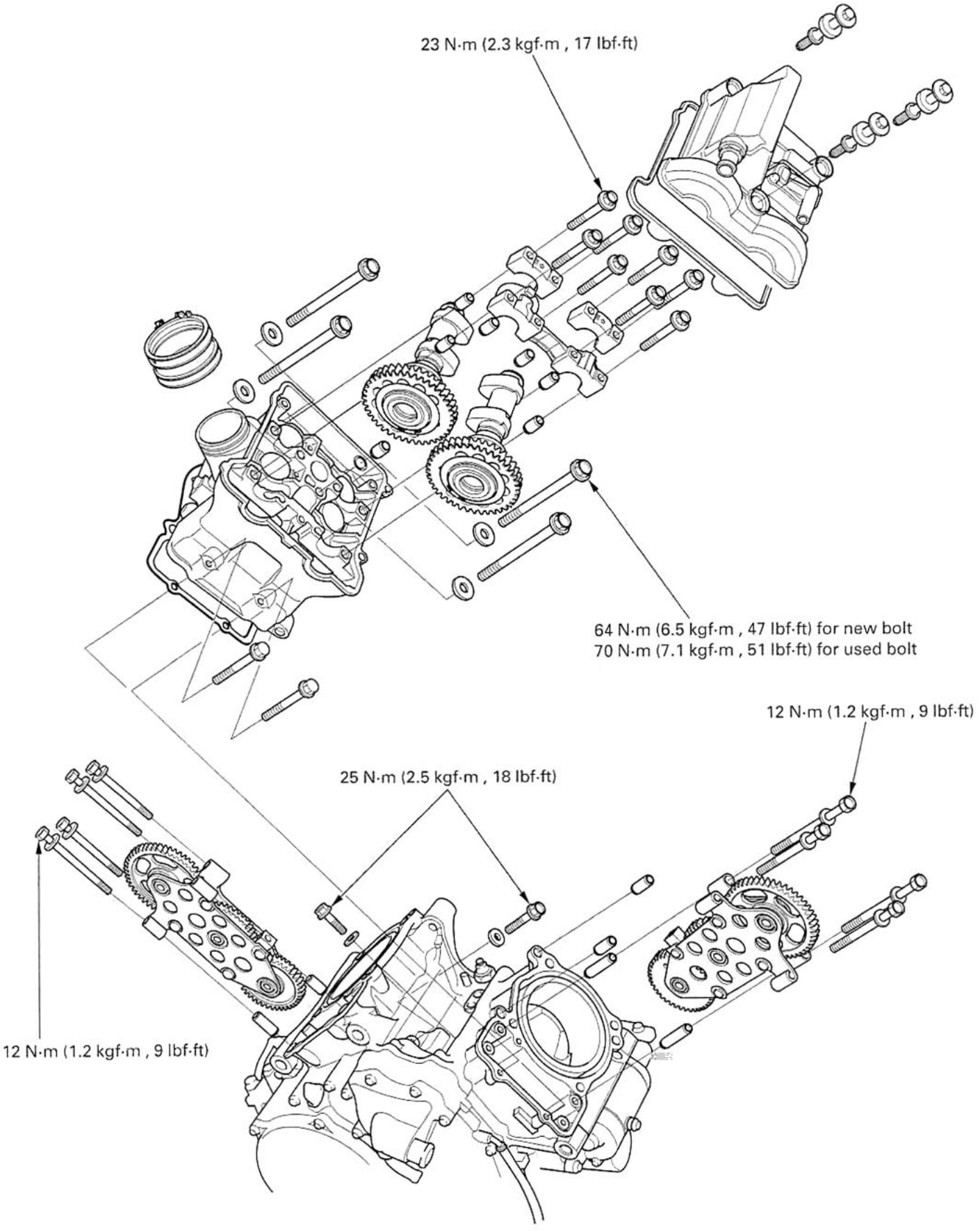
23 N·m (2.3 kgf·m , 17 lbf·ft)
64 N·m (6.5 kgf·m , 47 lbf·ft) for new bolt
70 N·m (7.1 kgf·m , 51 lbf·ft) for used bolt
12 N·m (1.2 kgf·m , 9 lbf·ft)
25 N·m (2.5 kgf·m , 18 lbf·ft)
12 N·m (1.2 kgf·m , 9 lbf·ft)

TORQUE VALUES

Camshaft holder bolt	23 N·m (2.3 kgf·m , 17 lbf·ft)	Apply oil to the threads and seating surface
Cylinder head bolt (11 mm) New	64 N·m (6.5 kgf·m , 47 lbf·ft)	Apply oil to the threads and seating surface
Used	70 N·m (7.1 kgf·m , 51 lbf·ft)	Apply oil to the threads and seating surface
Cam gear train setting bolt	25 N·m (2.5 kgf·m , 18 lbf·ft)	
Cam gear train mounting bolt	12 N·m (1.2 kgf·m , 9 lbf·ft)	
Spark plug	18 N·m (1.8 kgf·m , 13 lbf·ft)	

TOOLS

Valve spring compressor	07757-0010000	
Valve guide driver, 6.6 mm	07942-6570100	
Valve guide driver	07743-0020000	or 07942-6570100
Valve guide reamer, 6.0 mm	07VMH-MBB0200	or 07VMH-MBB020A (U.S.A. only)
Valve seat cutter, 35 mm (EX 45°)	07780-0010400	or equivalent commercially available in U.S.A.
Valve seat cutter, 42 mm (IN 45°)	07780-0010900	
Flat cutter, 42 mm (IN 32°)	07780-0013000	
Flat cutter, 36 mm (EX 32°)	07780-0013500	
Interior cutter, 37.5 mm (EX 60°)	07780-0014100	
Interior cutter, 42 mm (IN 60°)	07780-0014400	
Cutter holder, 6 mm	07VMH-MBB0100	

TROUBLESHOOTING

Engine top-end problems usually affect engine performance. These can be diagnosed by a compression test, or by tracing top-end noise with a sounding rod or stethoscope.

Compression too low, hard starting or poor performance at low speed

- Valves
  - Incorrect valve adjustment
  - Burned or bent valves
  - Incorrect valve timing
  - Broken valve spring
  - Uneven valve seating
- Cylinder head
  - Leaking or damaged cylinder head gasket
  - Warped or cracked cylinder head
  - Loose spark plug
- Cylinder/piston (section 12)

Compression too high

- Excessive carbon build-up on piston head or combustion chamber

Excessive smoke

- Worn valve stem or valve guide
- Damaged stem seal
- Cylinder/piston problem (section 12)

Excessive noise

- Incorrect valve clearance
- Sticking valve or broken valve spring
- Worn or damaged camshaft
- Worn or damaged valve lifter
- Worn or damaged cam gear train
- Worn camshaft gear
- Cylinder/piston problem (section 12)

Rough idle

- Low cylinder compression

CYLINDER COMPRESSION

Warm up the engine to normal operating temperature.
Stop the engine and remove the spark plug caps and spark plugs (page 3-7).
Install the compression gauge into the spark plug hole.
Disconnect the fuel pump 3P (black) connector.
Shift the transmission in neutral.
Open the throttle all the way and crank the engine with the starter motor until the gauge reading stops rising. The maximum reading is usually reached within 4–7 seconds.

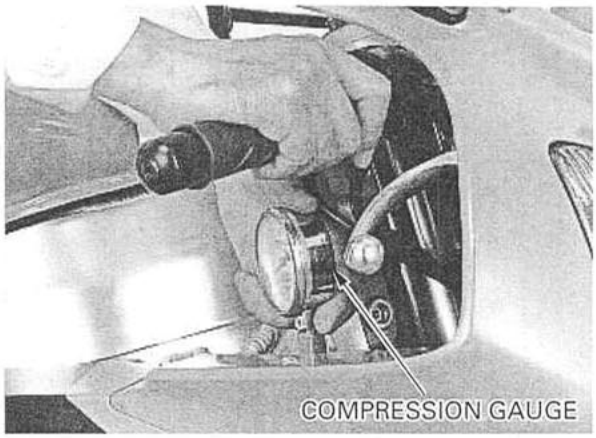

COMPRESSION PRESSURE:
1,216 kPa (12.4 kgf/cm², 176 psi)
at 350 rpm

Low compression can be caused by:
- blown cylinder head gasket
- improper valve adjustment
- valve leakage
- worn piston ring or cylinder

High compression can be caused by:
- carbon deposits in combustion chamber or on piston head

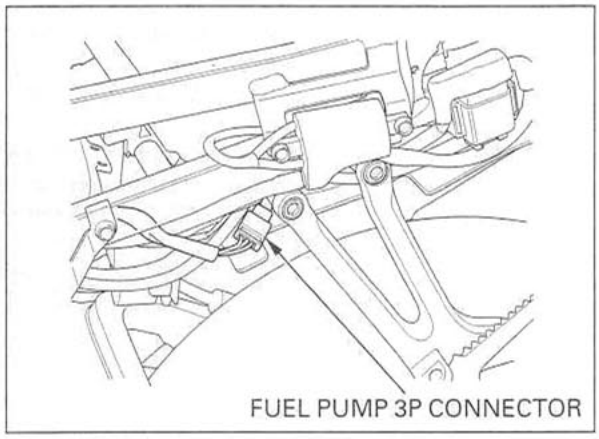

CAMSHAFT REMOVAL

Remove the cylinder head cover, timing hole cap and crankshaft hole cap (page 3-10).

Front cylinder:
Rotate the crankshaft counterclockwise and align the "F T" mark on the flywheel with the index mark on the left crankcase cover.

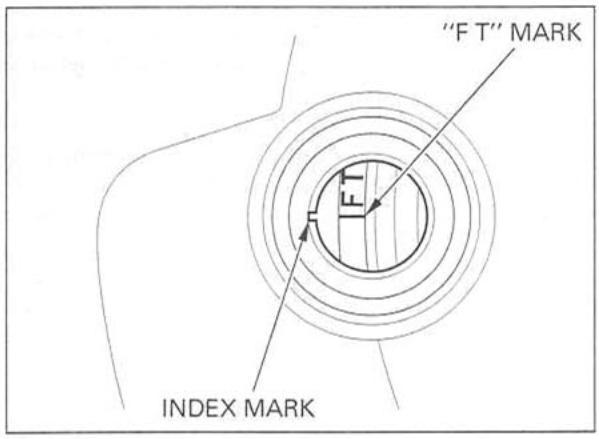

Check that the index lines on the front cylinder camshafts are flush with the cylinder head surface and facing outward as shown.

If the index lines are facing inward, rotate the crankshaft counterclockwise 360° (1 full turn) and align the "F T" mark with the index mark.

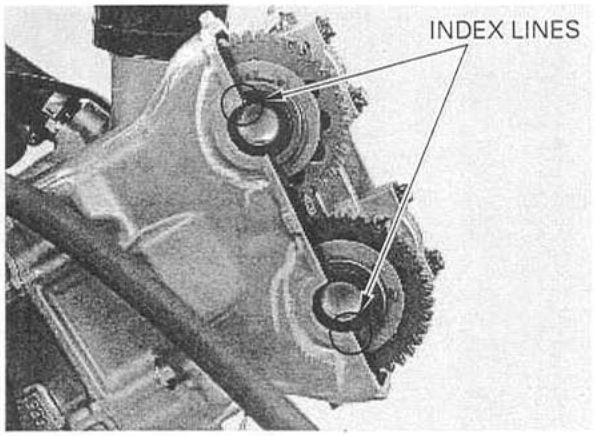

Rear cylinder:

Rotate the crankshaft counterclockwise and align the "R T" mark on the flywheel with the index mark on the left crankcase cover.

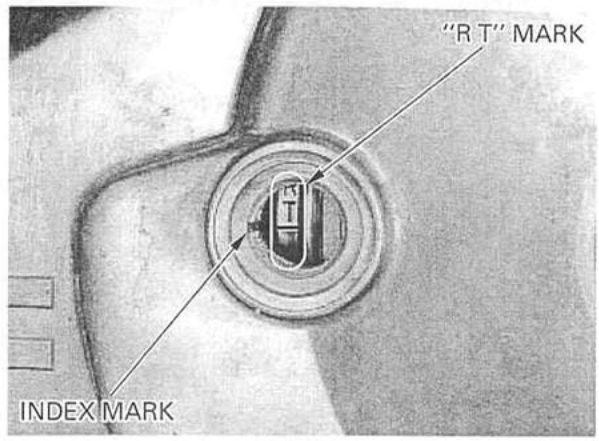

The index lines on the rear cylinder camshafts must be flush with the cylinder head surface and facing outward as shown.

If the index lines are facing inward, rotate the crankshaft counterclockwise 360° (1 full turn) and align the "R T" mark with the index mark.

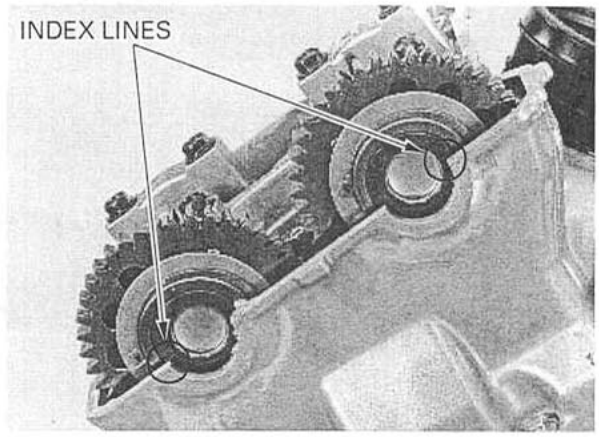

Remove the camshaft holder bolts, camshaft holders, dowel pins and camshafts.

NOTE:

- Do not forcibly remove the dowel pins from the camshaft holders.

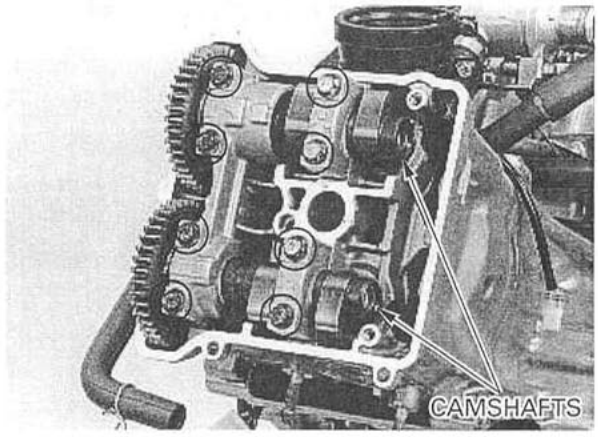

Remove the valve lifters and shims.

NOTE:

- Be careful not to damage the valve lifter bore.
- Shims may stick to the inside of the valve lifters. Do not allow the shims to fall into the crankcase.
- Mark all valve lifters and shims to ensure correct reassembly in their original locations.
- The valve lifter can be easily removed with a valve lapping tool or magnet.
- The shims can be easily removed with tweezers or a magnet.

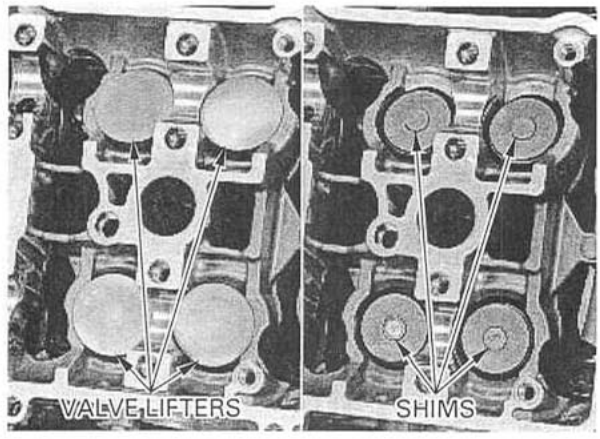

INSPECTION

CAMSHAFT

Check the cam and journal surfaces of the camshaft for scoring, scratches or evidence of insufficient lubrication.
Check the oil holes in the camshaft for clogs.

Measure the camshaft runout using a dial indicator.

SERVICE LIMIT: 0.05 mm (0.002 in)

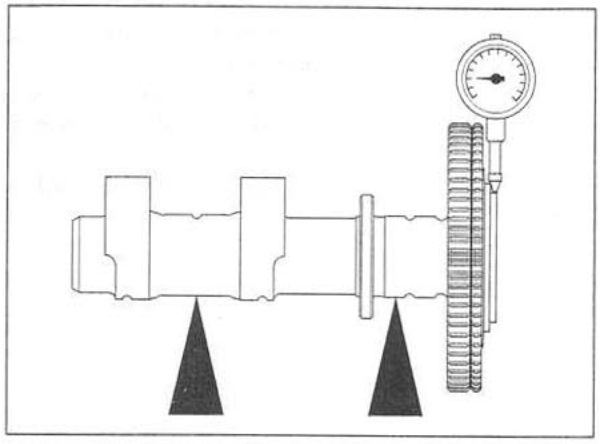

Measure each cam lobe height using a micrometer.

SERVICE LIMITS: IN : 38.880 mm (1.5307 in)
EX : 38.430 mm (1.5130 in)

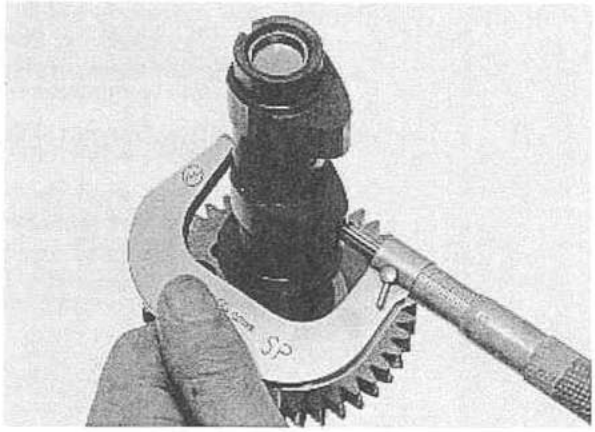

CAMSHAFT JOURNAL

Check the camshaft journal surfaces of the camshaft holders and cylinder head for scoring, scratches or evidence of insufficient lubrication.

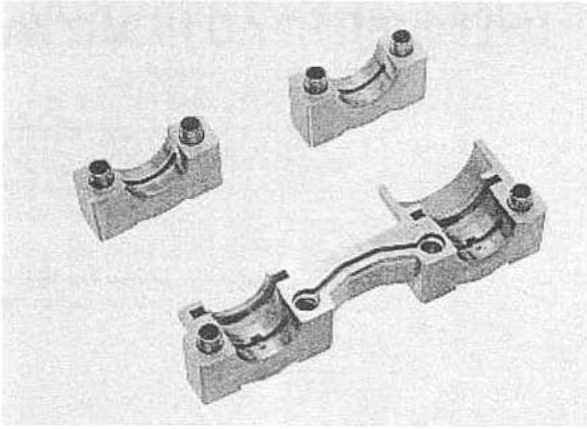

Do not rotate the camshaft during inspection.

CAMSHAFT OIL CLEARANCE

Wipe any oil from the journals of the cylinder head, camshaft and camshaft holder.
Put the camshaft onto the cylinder head and lay a strip of plastigauge lengthwise on each camshaft journal.

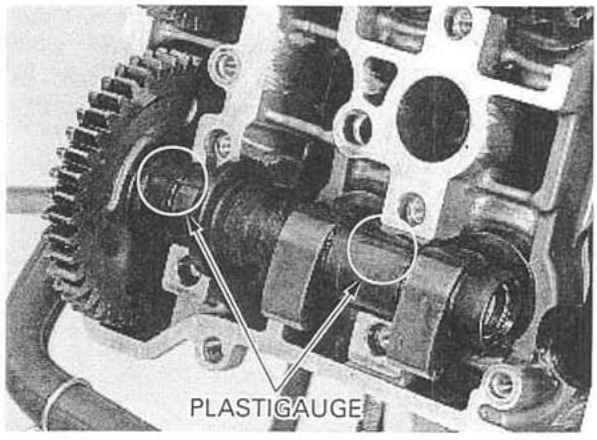

Apply oil to the threads and seating surfaces of the camshaft holder bolts.
Install the camshaft holder and tighten the bolts in a crisscross pattern in two or three steps.

TORQUE: 23 N·m (2.3 kgf·m , 17 lbf·ft)

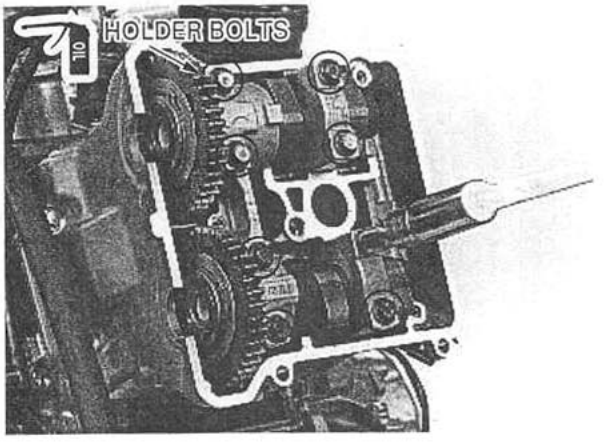

Remove the camshaft holder and measure the compressed plastigauge at its widest point on the camshaft to determine the oil clearance.

SERVICE LIMIT: 0.100 mm (0.0039 in)

If the oil clearance exceeds the service limit, replace the camshaft and recheck the oil clearance.
Replace the cylinder head and camshaft holders as a set if the oil clearance still exceeds the service limit.

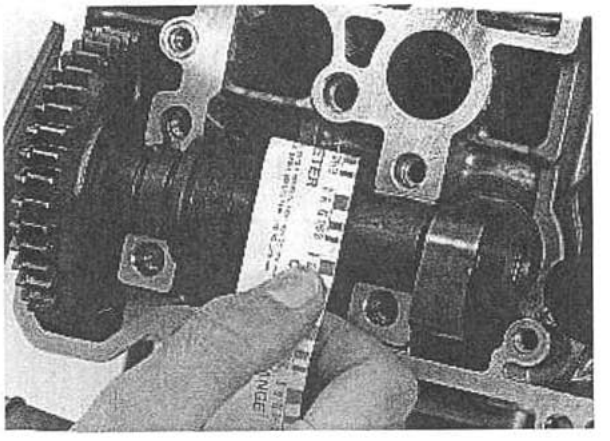

CYLINDER HEAD REMOVAL

Remove the following:
- exhaust system (page 2-5)
- oil cooler for front cylinder head (page 4-8)
- throttle body assembly (page 5-61)
- radiators for front cylinder head (page 6-6)
- camshafts (page 8-3)
- bolt, water hose joint and O-ring
- cam pulse generator for rear cylinder head (page 5-58)

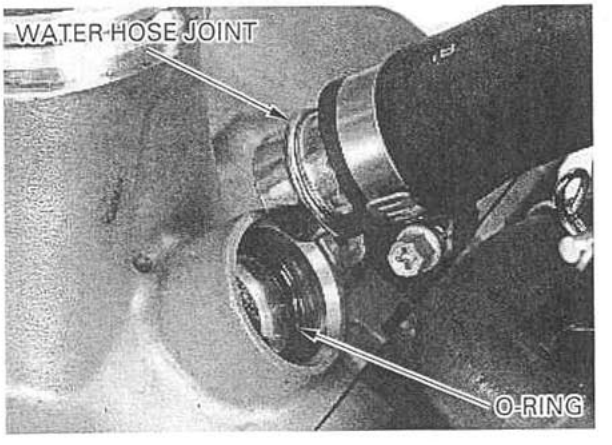

Remove the two 6 mm cylinder head bolts.
Loosen the four 11 mm cylinder head bolts in a crisscross pattern in two or three steps, and remove them and the washers.
Remove the cylinder head.

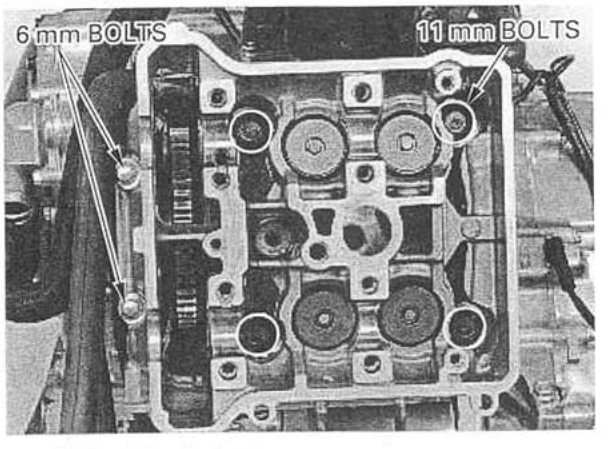

INSPECTION

CYLINDER HEAD

Remove the carbon deposits from the combustion chamber, being careful not to damage the gasket surface.
Check the spark plug hole and valve areas for cracks.

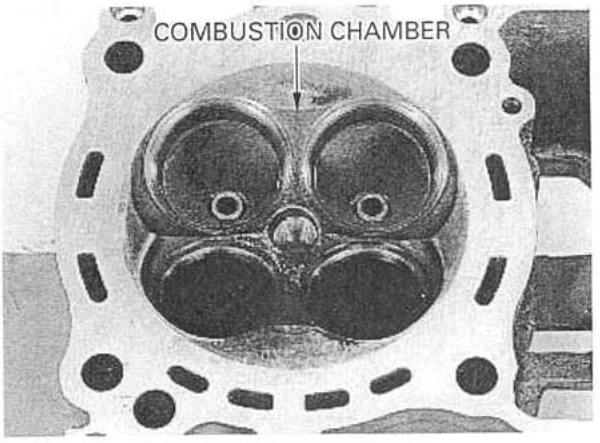

Check the cylinder head for warpage with a straight edge and feeler gauge.

SERVICE LIMIT: 0.10 mm (0.004 in)

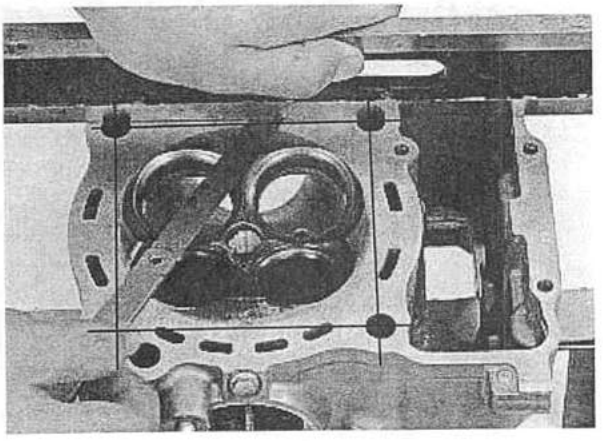

Check the valve lifter bore for scoring, scratches or damage.
Measure the each valve lifter bore I.D.

SERVICE LIMIT: 34.04 mm (1.340 in)

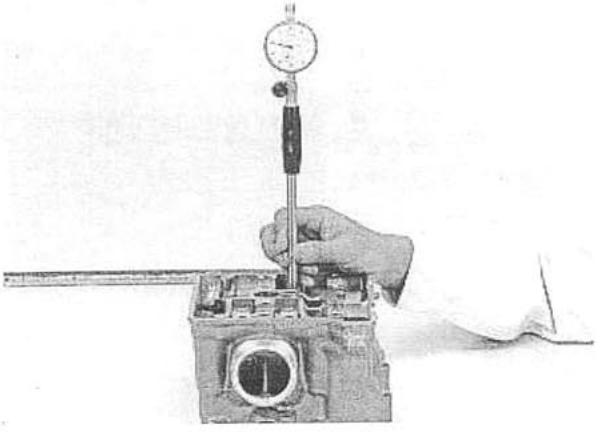

VALVE LIFTER

Check the valve lifter for scoring, scratches or damage.
Measure the each valve lifter O.D.

SERVICE LIMIT: 33.97 mm (1.337 in)

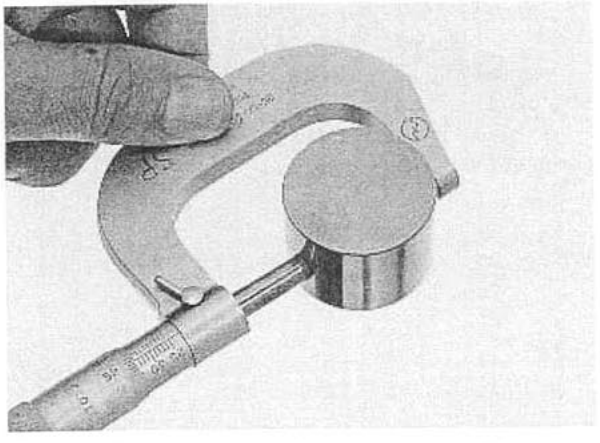

VALVE SPRING

Measure the valve spring free length.

SERVICE LIMITS: Inner: 40.0 mm (1.57 in)
Outer: 44.8 mm (1.76 in)

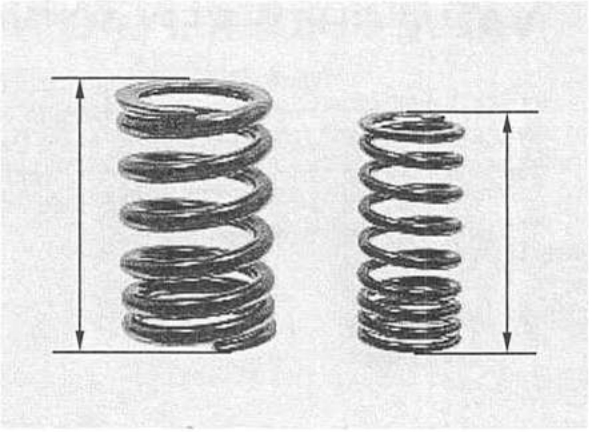

VALVE/VALVE GUIDE

Check that the valve moves smoothly in the guide.
Check the valve for bends, burns or abnormal wear.
Measure each valve stem O.D. and record it.

SERVICE LIMITS:IN: 5.965 mm (0.2348 in)
EX: 5.955 mm (0.2344 in)

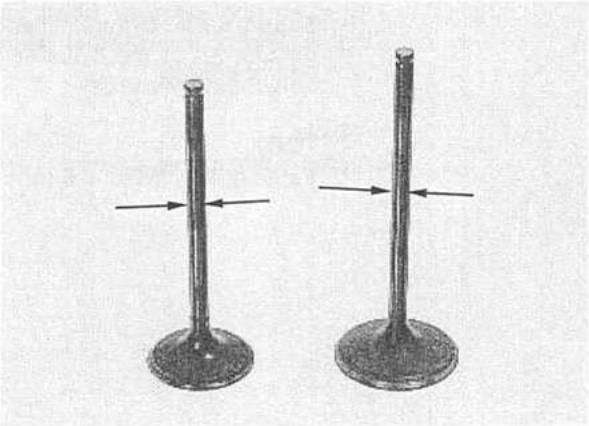

Ream the valve guide to remove any carbon build-up before measuring the guide.
Insert the reamer from the combustion chamber side of the head and always rotate the reamer clockwise.

TOOL:
Valve guide reamer, 6.0 mm 07VMH-MBB0200 or 07VMH-MBB020A (U.S.A. only)

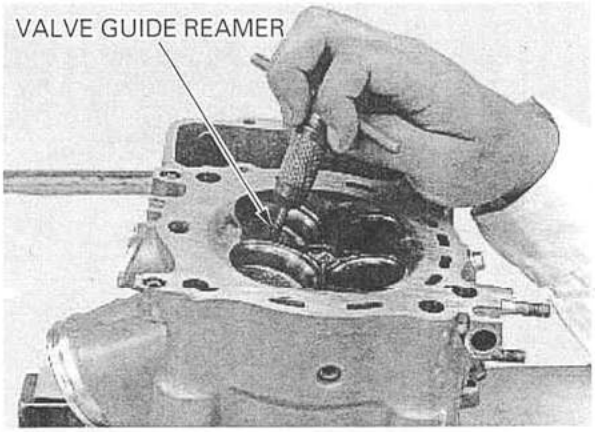

Measure each valve guide I.D. and record it.

SERVICE LIMIT: 6.040 mm (0.2378 in)

Subtract each valve stem O.D. from the corresponding guide I.D. to obtain the stem-to-guide clearance.

SERVICE LIMITS: IN: 0.075 mm (0.0030 in)
EX: 0.085 mm (0.0033 in)

Inspect and reface the valve seats whenever the valve guides are replaced (page 8-11).

If the stem-to-guide clearance exceeds the service limit, determine if a new guide with standard dimensions would bring the clearance within tolerance.
If so, replace any guides as necessary and ream to fit.
If the stem-to-guide clearance exceeds the service limit with a new guide, also replace the valve.

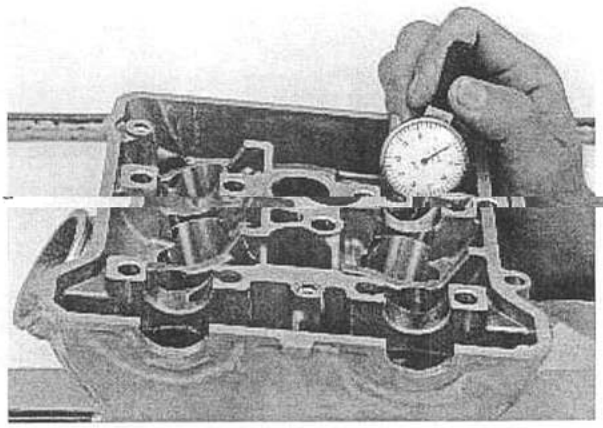

REFACING

NOTE:

- Follow the refacing manufacturer's operating instructions.
- Be careful not to grind the seat more than necessary.

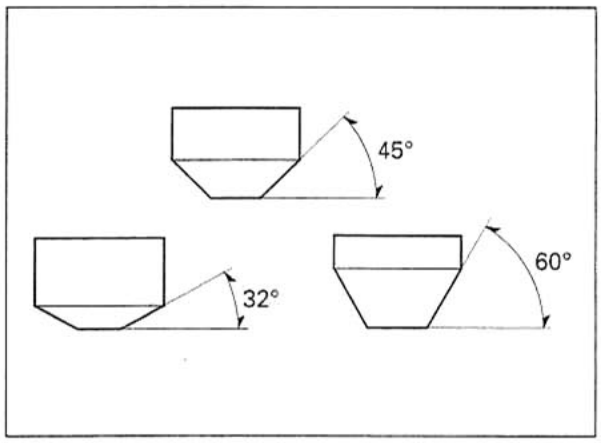

If the contact area is too high on the valve, the seat must be lowered using a 32° flat cutter.

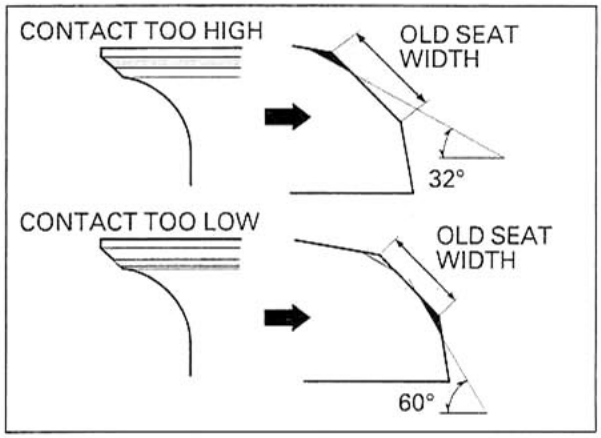

TOOLS:

Flat cutter, 42 mm (IN)	07780-0013000
Flat cutter, 36 mm (EX)	07780-0013500
Cutter holder, 6 mm	07VMH-MBB0100

or equivalent commercially available in U.S.A.

If the contact area is too low on the valve, the seat must be raised using a 60° interior cutter.

TOOLS:

Interior cutter, 42 mm (IN)	07780-0014400
Interior cutter, 37.5 mm (EX)	07780-0014100
Cutter holder, 6 mm	07VMH-MBB0100

or equivalent commercially available in U.S.A.

Using a 45° seat cutter, remove any roughness or irregularities from the seat.

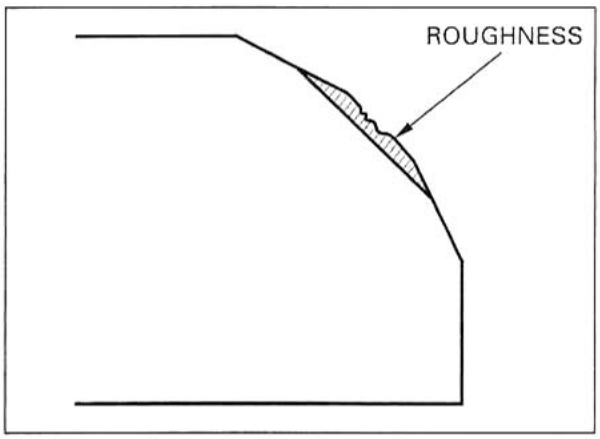

TOOLS:

Seat cutter, 42 mm (IN)	07780-0010900
Seat cutter, 35 mm (EX)	07780-0010400
Cutter holder, 6 mm	07VMH-MBB0100

or equivalent commercially available in U.S.A.

Using a 32° flat cutter, remove 1/4 of the existing valve seat material.

TOOLS:

Flat cutter, 42 mm (IN)	07780-0013000
Flat cutter, 36 mm (EX)	07780-0013500
Cutter holder, 6 mm	07VMH-MBB0100

or equivalent commercially available in U.S.A.

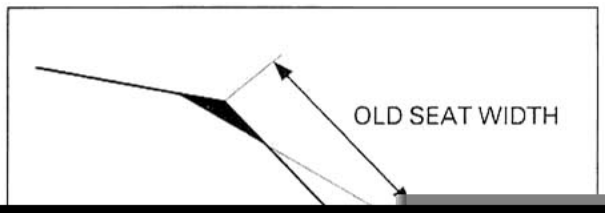

Using a 60° interior cutter, remove 1/4 of the existing valve seat material.

TOOLS:

Interior cutter, 42 mm (IN)	07780-0014400
Interior cutter, 37.5 mm (EX)	07780-0014100
Cutter holder, 6 mm	07VMH-MBB0100

or equivalent commercially available in U.S.A.

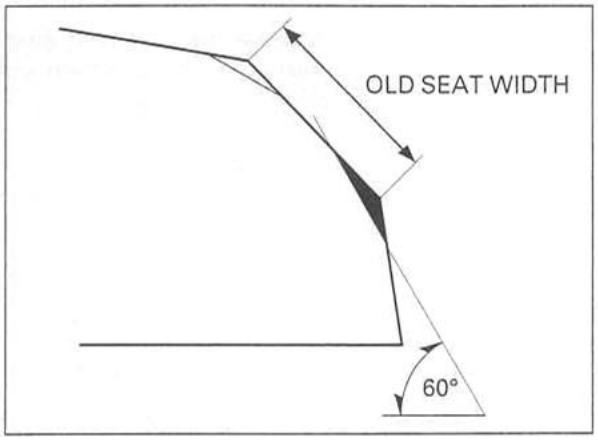

Using a 45° seat cutter, cut the seat to the proper width.

TOOLS:

Seat cutter, 42 mm (IN)	07780-0010900
Seat cutter, 35 mm (EX)	07780-0010400
Cutter holder, 6 mm	07VMH-MBB0100

or equivalent commercially available in U.S.A.

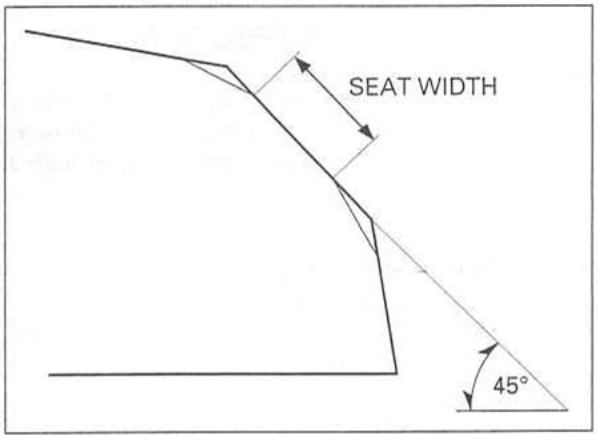

Excessive lapping pressure may deform or damage the seat.
Change the angle of the lapping tool frequently to prevent uneven seat wear.
Do not allow any lapping compound to enter the guides.

After cutting the seat, apply lapping compound to the valve face, and lap the valve using light pressure.

After lapping, wash any residual compound off the cylinder head and valve, and recheck the seat contact.

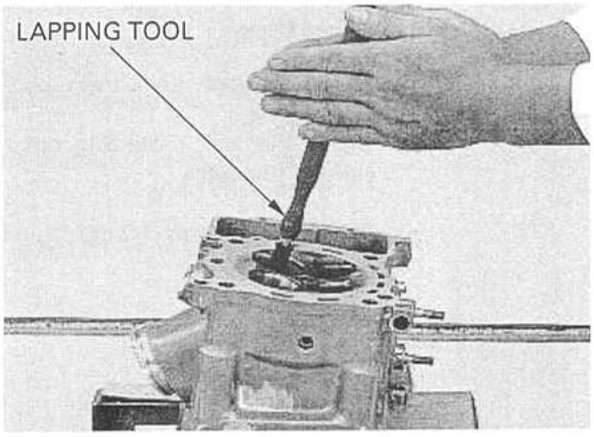

CAM GEAR TRAIN

REMOVAL

Remove the cylinder head (page 8-6).

Remove the cam gear train setting bolt and sealing washer.

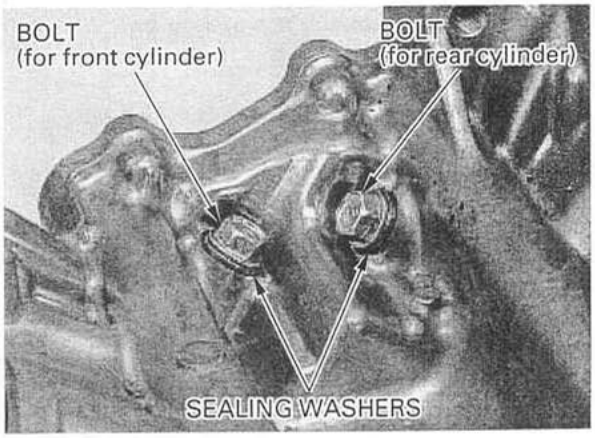

Remove the four cam gear train mounting bolts, washers, cam gear train assembly and two dowel pins.

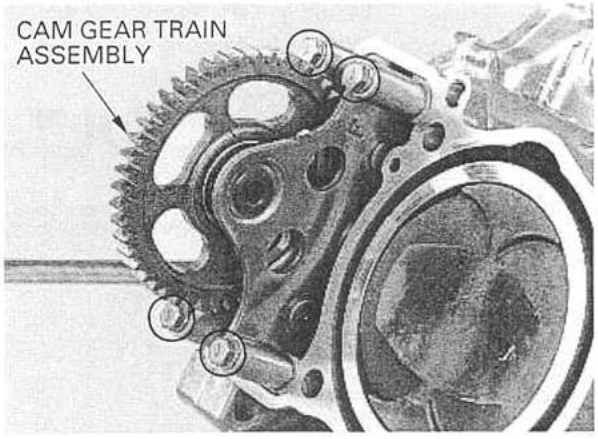

INSPECTION

Check the gear teeth for wear or damage.
Check the gear case for deformation or damage.
Replace the cam gear train assembly if necessary.

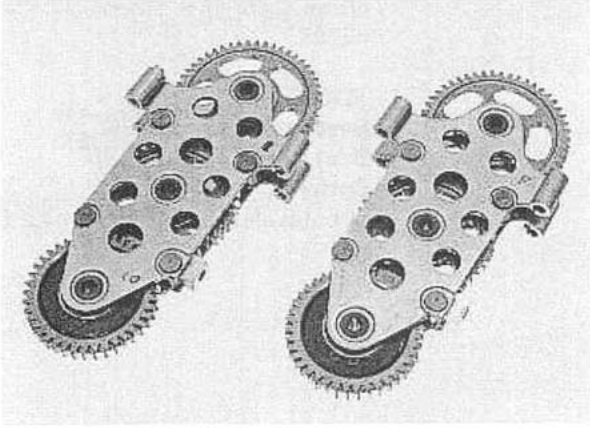

INSTALLATION

Install the cam gear train assembly with the two dowel pins.
Install the four mounting bolts and washers, and tighten the bolts.

TORQUE: 12 N·m (1.2 kgf·m , 9 lbf·ft)

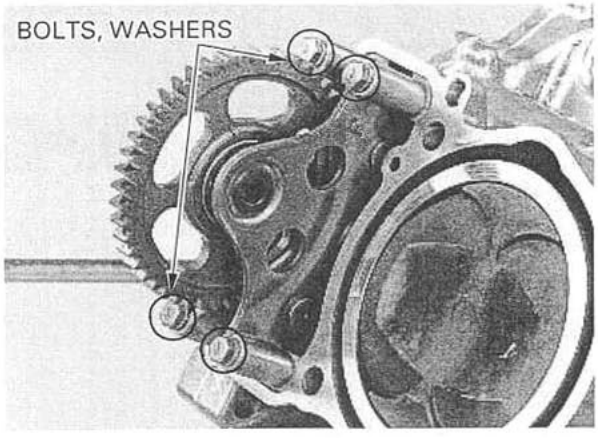

Install the setting bolt with a new sealing washer and tighten it.

TORQUE: 25 N·m (2.5 kgf·m , 18 lbf·ft)

Install the cylinder head (page 8-16).

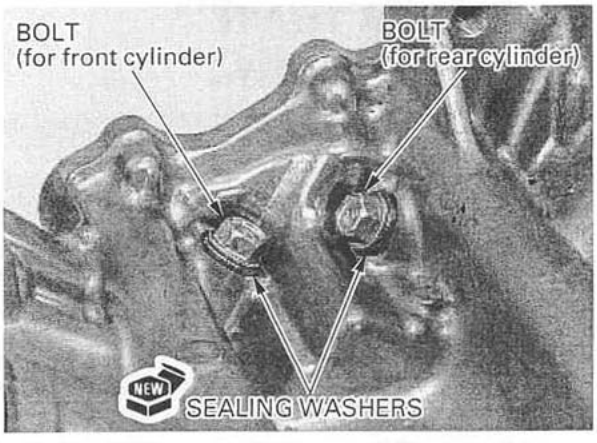

Install the lifter bore protector made from a film container into the valve lifter bore.

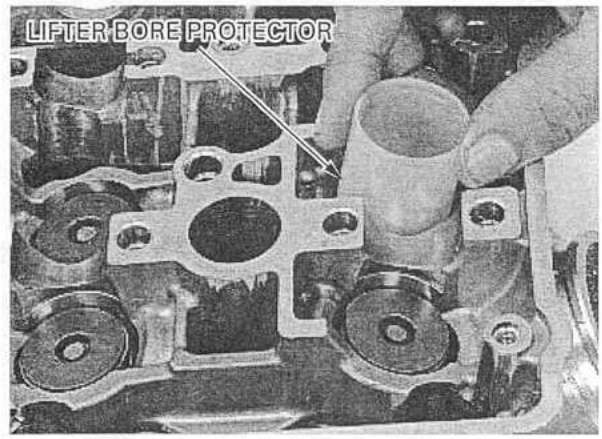

Grease the cotters to ease installation. To prevent loss of tension, do not compress the valve springs more than necessary to install the cotters.

Install the valve spring cotters using the valve spring compressor.

TOOL:
Valve spring compressor 07757-0010000

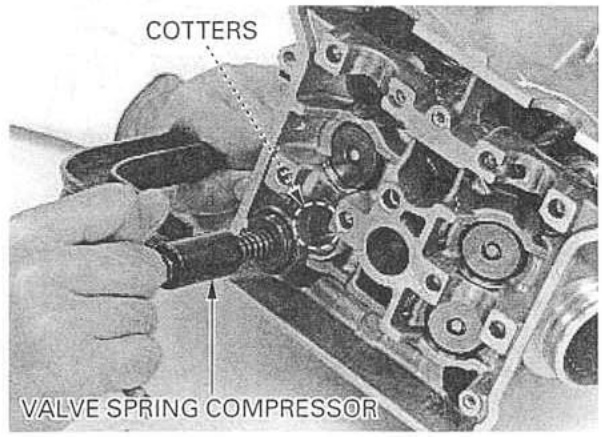

Support the cylinder head so the valve heads will not contact anything that cause damage.
Tap the valve stems gently with two plastic hammers as shown to seat the cotters firmly.

Install and tighten the spark plug.

TORQUE: 18 N·m (1.8 kgf·m , 13 lbf·ft)

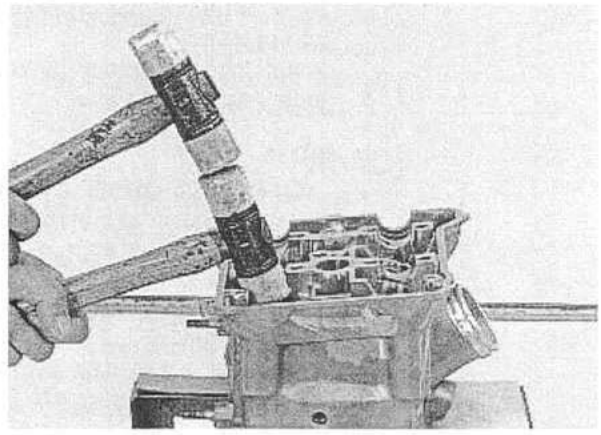

CYLINDER HEAD INSTALLATION

Install the dowel pins and a new gasket.

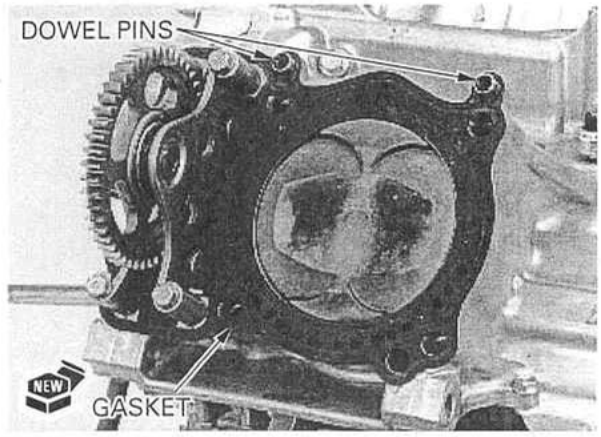

Install the cylinder head onto the cylinder.

Apply oil to the threads and seating surfaces of the 11 mm cylinder head bolts and install them.
Tighten the 11 mm bolts in a crisscross pattern in two or three steps.

TORQUE: 64 N·m (6.5 kgf·m , 47 lbf·ft) for new bolt
70 N·m (7.1 kgf·m , 51 lbf·ft) for used bolt

Install and tighten the two 6 mm bolts securely.

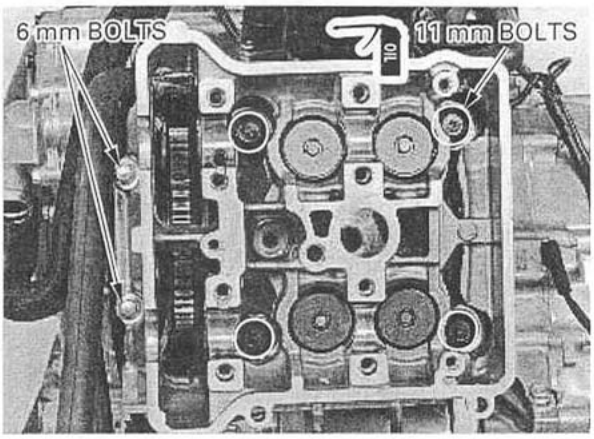

Install a new O-ring into the cylinder head.
Install the water hose joint and tighten the bolt.

Install the following:
- camshafts
- radiators (page 6-6)
- cam pulse generator (page 5-58)
- throttle body assembly (page 5-72)
- oil cooler (page 4-10)
- exhaust system (page 2-7)

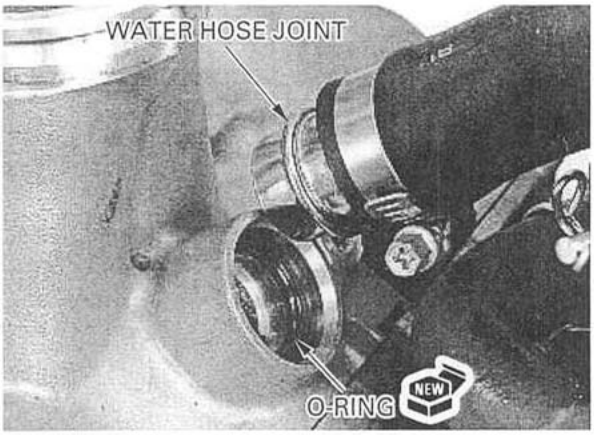

CAMSHAFT INSTALLATION

NOTE:
- If both front and rear cylinder camshafts were serviced, install the front cylinder camshafts first, then install the rear cylinder camshafts.
- Even if you are servicing either the front or rear cylinder head, the other cylinder head cover must be removed and the other cylinder camshaft position must be checked.

Install the valve shims in their original locations.

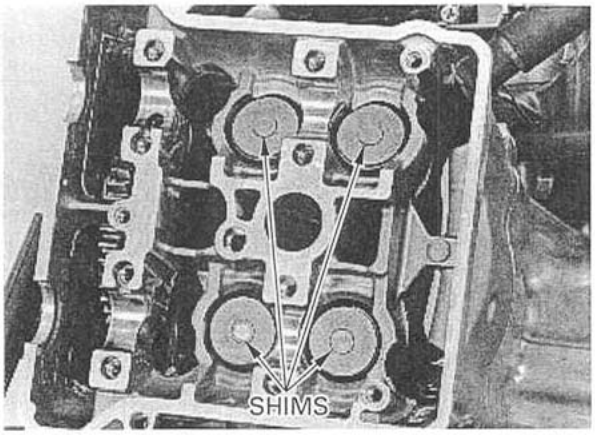

Coat the outer surfaces of the valve lifters with molybdenum oil solution.
Install the valve lifters in their original lifter bores, being careful not to damage the sliding surfaces of the lifters and bores.

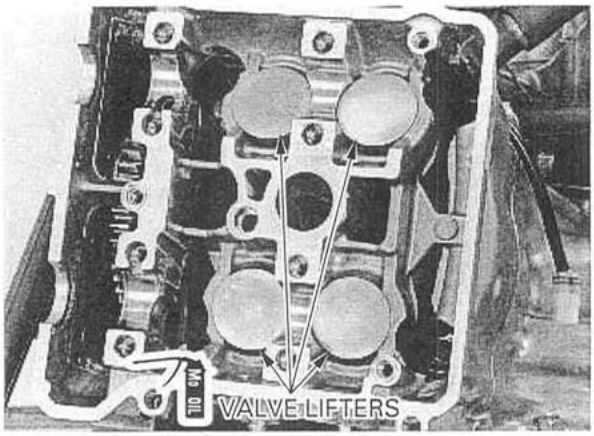

The camshaft has the following identification mark:
FR IN: Front cylinder intake camshaft
FR EX: Front cylinder exhaust camshaft
RR IN: Rear cylinder intake camshaft
RR EX: Rear cylinder exhaust camshaft

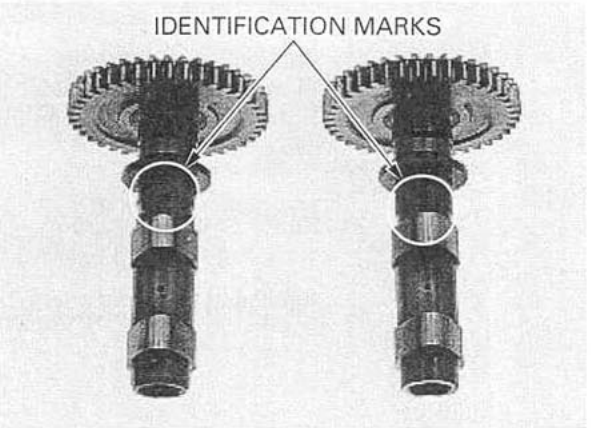

Camshaft holder A has the following identification mark:
F I: Front cylinder intake camshaft holder
F E: Front cylinder exhaust camshaft holder
R I: Rear cylinder intake camshaft holder
R E: Rear cylinder exhaust camshaft holder

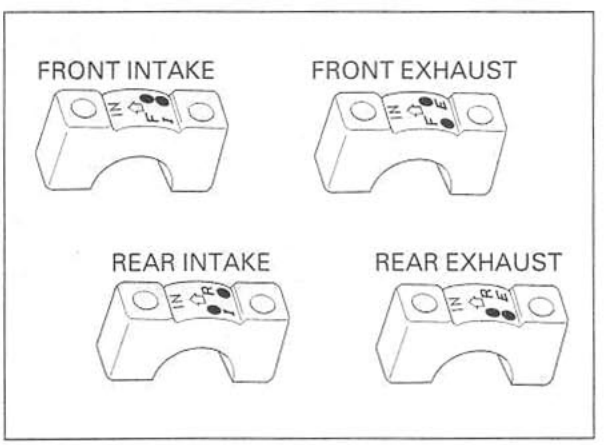

FRONT CYLINDER CAMSHAFTS

If the rear cylinder camshafts have not been serviced, remove the rear cylinder head cover and check the rear cylinder camshaft position as follows:

Turn the crankshaft counterclockwise and align "R T" mark on the flywheel with the index mark on the left crankcase cover.

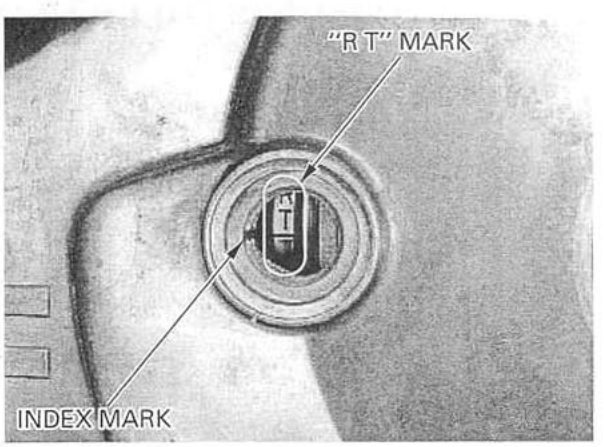

Check the index lines on the rear cylinder camshafts.

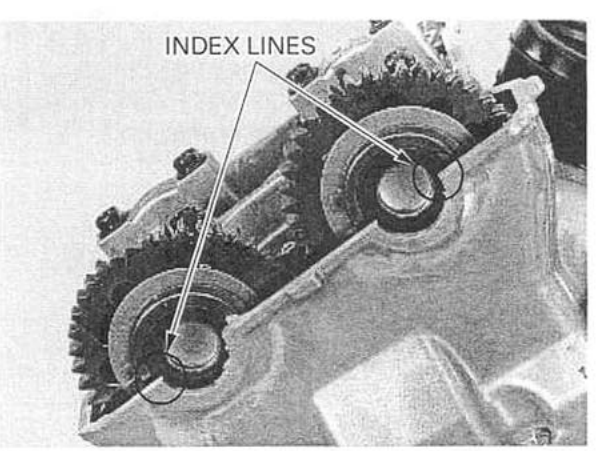

If the index lines are facing outward, turn the crankshaft counterclockwise 1-1/4 turn (450°) and align the "F T" mark with the index mark.

If the index lines are facing inward, turn the crankshaft counterclockwise 1/4 turn (90°) and align the "F T" mark with the index mark.

If the rear cylinder camshafts have been serviced, turn the crankshaft counterclockwise and align the "F T" mark with the index mark.

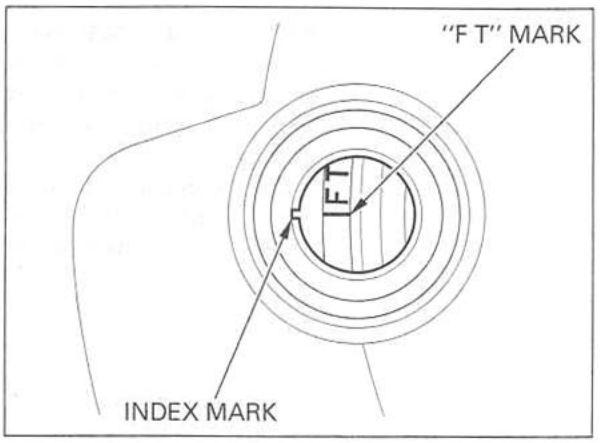

Apply molybdenum oil solution to the camshaft journals and cam lobes.
Install the camshafts in their proper locations so the index lines on the camshafts are flush with the cylinder head surface and face outward.

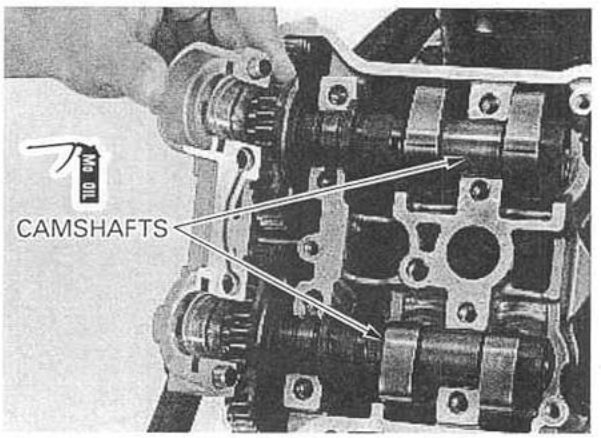

Install the dowel pins and camshaft holder B in their proper location.
Install the dowel pins and camshaft holders A in their proper locations with the "IN" (arrow) mark facing to the intake side.
Apply oil to the threads and seating surfaces of the camshaft holder bolts.
Install the bolts and tighten them in a crisscross pattern in two or three steps.

TORQUE: 23 N·m (2.3 kgf·m , 17 lbf·ft)

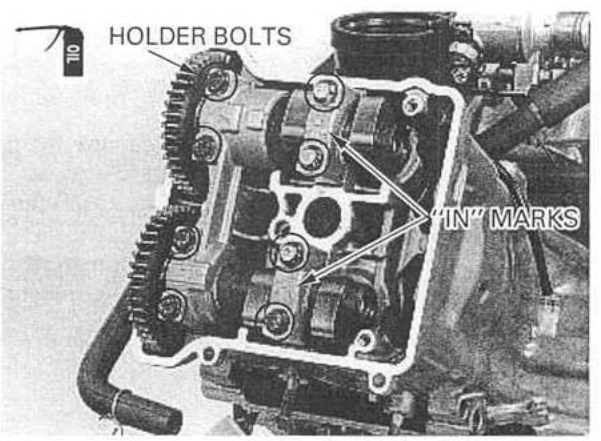

Make sure the index lines on the camshafts are flush with the cylinder head surface.

If the rear cylinder camshafts have not been serviced, install the cylinder head covers (page 3-12).

If the rear cylinder camshafts have been serviced, install the rear cylinder camshafts (page 8-20).

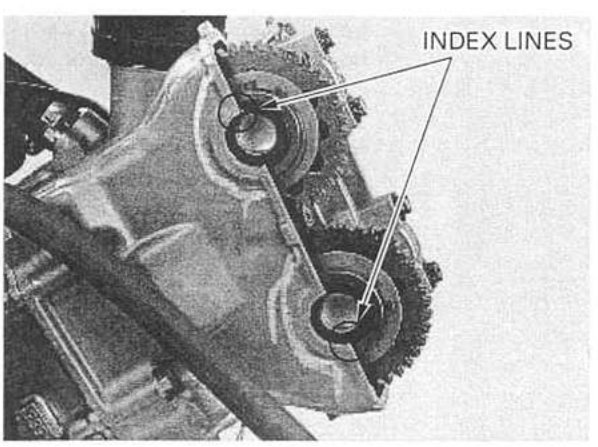

8. CYLINDER HEAD/VALVE

SERVICE INFORMATION

GENERAL

- This section covers service of the camshafts, cylinder head and valves.
- The camshafts, cylinder head and valves can be serviced with the engine installed in the frame.
- When disassembling, mark and store the disassembled parts to ensure that they are reinstalled in their original locations.
- Clean all disassembled parts with cleaning solvent and dry them by blowing them off with compressed air before inspection.
- Camshaft lubricating oil is fed through oil passages in the cylinder head. Clean the oil passages before assembling the cylinder head.
- Be careful not to damage the mating surfaces when removing the cylinder head cover and cylinder head.

8

SPECIFICATIONS

Unit: mm (in)

ITEM			STANDARD	SERVICE LIMIT
Cylinder compression at 350 rpm			1,216 kPa (12.4 kgf/cm², 176 psi)	———
Valve clearance		IN	0.16 ± 0.03 (0.006 ± 0.001)	———
		EX	0.31 ± 0.03 (0.012 ± 0.001)	———
Camshaft	Cam lobe height	IN	39.180 – 39.340 (1.5425 – 1.5488)	38.880 (1.5307)
		EX	38.730 – 38.890 (1.5248 – 1.5311)	38.430 (1.5130)
	Runout		———	0.05 (0.002)
	Oil clearance		0.020 – 0.062 (0.0008 – 0.0024)	0.100 (0.0039)
Valve lifter	Valve lifter O.D.		33.978 – 33.993 (1.3377 – 1.3383)	33.97 (1.337)
	Valve lifter bore I.D.		34.010 – 34.026 (1.3390 – 1.3396)	34.04 (1.340)
Valve, Valve guide	Valve stem O.D.	IN	5.975 – 5.990 (0.2352 – 0.2358)	5.965 (0.2348)
		EX	5.965 – 5.980 (0.2348 – 0.2354)	5.955 (0.2344)
	Valve guide I.D.	IN/EX	6.000 – 6.012 (0.2362 – 0.2367)	6.040 (0.2378)
	Stem-to-guide clearance	IN	0.010 – 0.037 (0.0004 – 0.0015)	0.075 (0.0030)
		EX	0.020 – 0.047 (0.0008 – 0.0019)	0.085 (0.0033)
	Valve guide projection above cylinder head		14.0 – 14.2 (0.55 – 0.56)	———
	Valve seat width	IN	1.1 – 1.3 (0.04 – 0.05)	1.7 (0.07)
		EX	1.3 – 1.5 (0.05 – 0.06)	1.9 (0.07)
Valve spring	Free length	Inner	41.0 (1.61)	40.0 (1.57)
		Outer	45.8 (1.80)	44.8 (1.76)
Cylinder head warpage			———	0.10 (0.004)

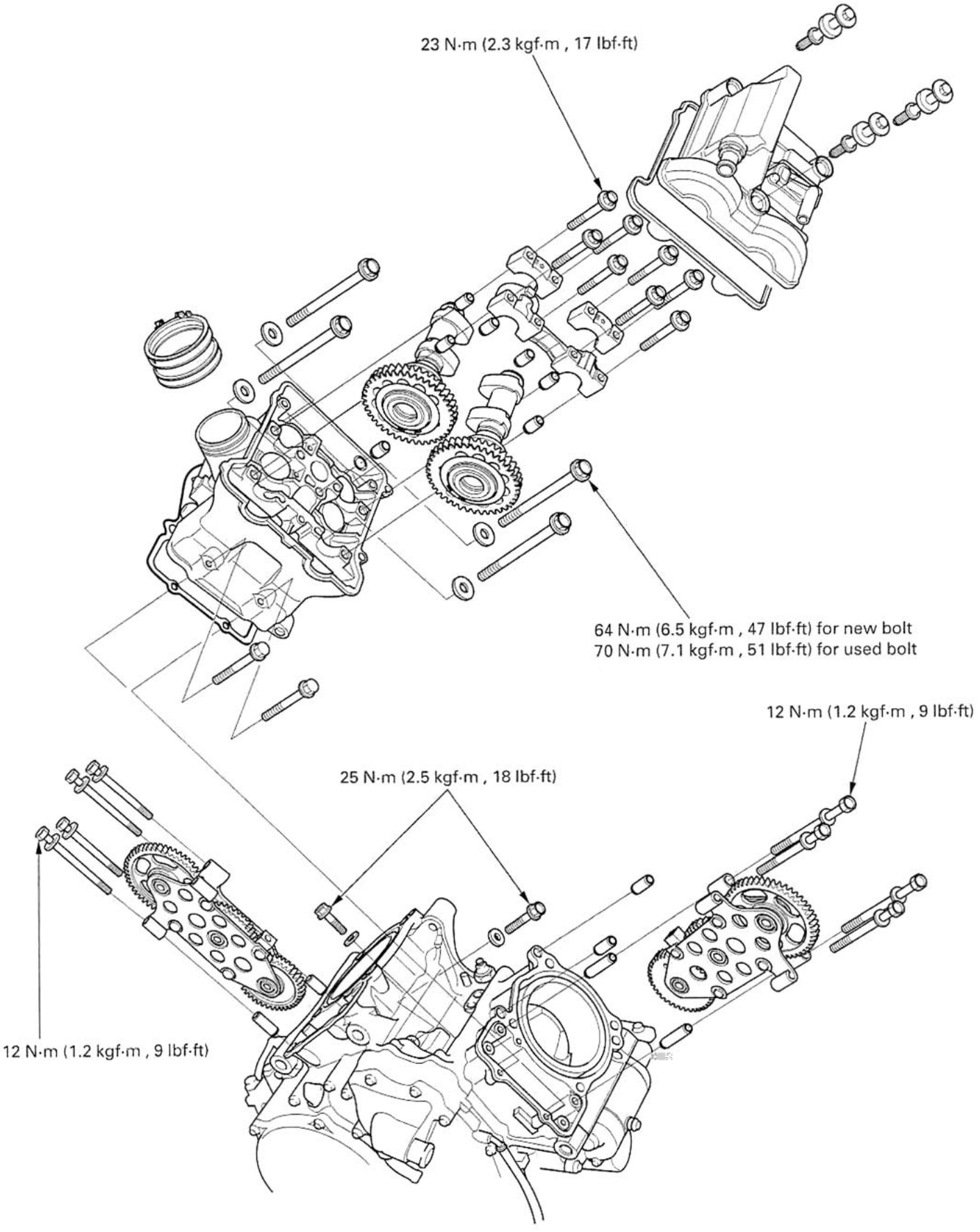
23 N·m (2.3 kgf·m , 17 lbf·ft)
64 N·m (6.5 kgf·m , 47 lbf·ft) for new bolt
70 N·m (7.1 kgf·m , 51 lbf·ft) for used bolt
12 N·m (1.2 kgf·m , 9 lbf·ft)
25 N·m (2.5 kgf·m , 18 lbf·ft)
12 N·m (1.2 kgf·m , 9 lbf·ft)

TORQUE VALUES

Camshaft holder bolt	23 N·m (2.3 kgf·m , 17 lbf·ft)	Apply oil to the threads and seating surface
Cylinder head bolt (11 mm) New	64 N·m (6.5 kgf·m , 47 lbf·ft)	Apply oil to the threads and seating surface
Used	70 N·m (7.1 kgf·m , 51 lbf·ft)	Apply oil to the threads and seating surface
Cam gear train setting bolt	25 N·m (2.5 kgf·m , 18 lbf·ft)	
Cam gear train mounting bolt	12 N·m (1.2 kgf·m , 9 lbf·ft)	
Spark plug	18 N·m (1.8 kgf·m , 13 lbf·ft)	

TOOLS

Valve spring compressor	07757-0010000	
Valve guide driver, 6.6 mm	07942-6570100	
Valve guide driver	07743-0020000	or 07942-6570100
Valve guide reamer, 6.0 mm	07VMH-MBB0200	or 07VMH-MBB020A (U.S.A. only)
Valve seat cutter, 35 mm (EX 45°)	07780-0010400	or equivalent commercially available in U.S.A.
Valve seat cutter, 42 mm (IN 45°)	07780-0010900	
Flat cutter, 42 mm (IN 32°)	07780-0013000	
Flat cutter, 36 mm (EX 32°)	07780-0013500	
Interior cutter, 37.5 mm (EX 60°)	07780-0014100	
Interior cutter, 42 mm (IN 60°)	07780-0014400	
Cutter holder, 6 mm	07VMH-MBB0100	

TROUBLESHOOTING

Engine top-end problems usually affect engine performance. These can be diagnosed by a compression test, or by tracing top-end noise with a sounding rod or stethoscope.

Compression too low, hard starting or poor performance at low speed

- Valves
  - Incorrect valve adjustment
  - Burned or bent valves
  - Incorrect valve timing
  - Broken valve spring
  - Uneven valve seating
- Cylinder head
  - Leaking or damaged cylinder head gasket
  - Warped or cracked cylinder head
  - Loose spark plug
- Cylinder/piston (section 12)

Compression too high

- Excessive carbon build-up on piston head or combustion chamber

Excessive smoke

- Worn valve stem or valve guide
- Damaged stem seal
- Cylinder/piston problem (section 12)

Excessive noise

- Incorrect valve clearance
- Sticking valve or broken valve spring
- Worn or damaged camshaft
- Worn or damaged valve lifter
- Worn or damaged cam gear train
- Worn camshaft gear
- Cylinder/piston problem (section 12)

Rough idle

- Low cylinder compression

CYLINDER COMPRESSION

Warm up the engine to normal operating temperature.
Stop the engine and remove the spark plug caps and spark plugs (page 3-7).
Install the compression gauge into the spark plug hole.
Disconnect the fuel pump 3P (black) connector.
Shift the transmission in neutral.
Open the throttle all the way and crank the engine with the starter motor until the gauge reading stops rising. The maximum reading is usually reached within 4–7 seconds.

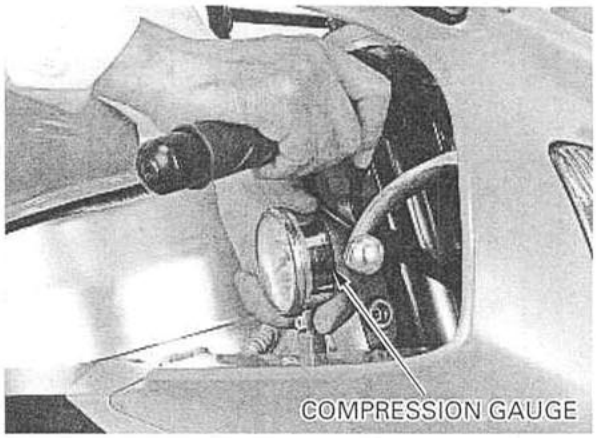

COMPRESSION PRESSURE:
1,216 kPa (12.4 kgf/cm², 176 psi)
at 350 rpm

Low compression can be caused by:
- blown cylinder head gasket
- improper valve adjustment
- valve leakage
- worn piston ring or cylinder

High compression can be caused by:
- carbon deposits in combustion chamber or on piston head

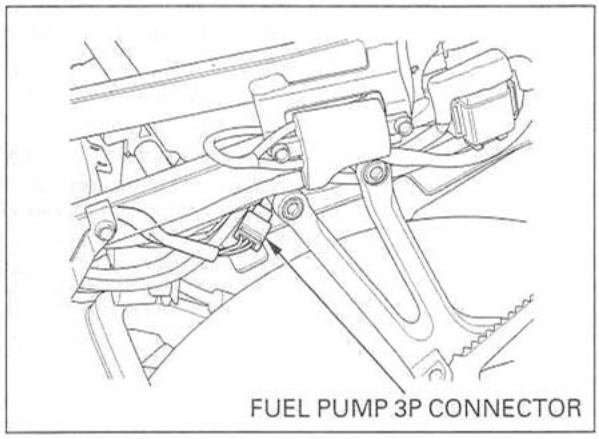

CAMSHAFT REMOVAL

Remove the cylinder head cover, timing hole cap and crankshaft hole cap (page 3-10).

Front cylinder:
Rotate the crankshaft counterclockwise and align the "F T" mark on the flywheel with the index mark on the left crankcase cover.

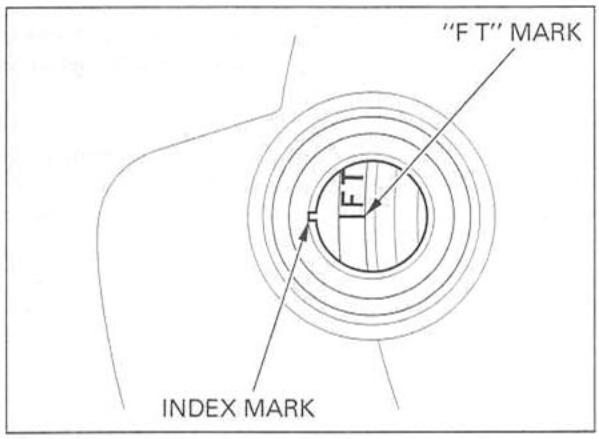

Check that the index lines on the front cylinder camshafts are flush with the cylinder head surface and facing outward as shown.

If the index lines are facing inward, rotate the crankshaft counterclockwise 360° (1 full turn) and align the "F T" mark with the index mark.

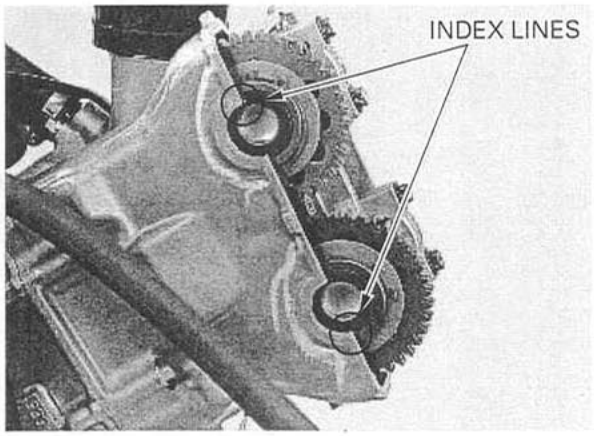

Rear cylinder:

Rotate the crankshaft counterclockwise and align the "R T" mark on the flywheel with the index mark on the left crankcase cover.

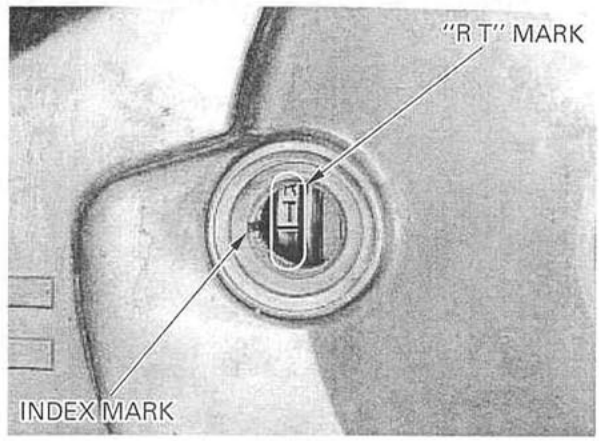

The index lines on the rear cylinder camshafts must be flush with the cylinder head surface and facing outward as shown.

If the index lines are facing inward, rotate the crankshaft counterclockwise 360° (1 full turn) and align the "R T" mark with the index mark.

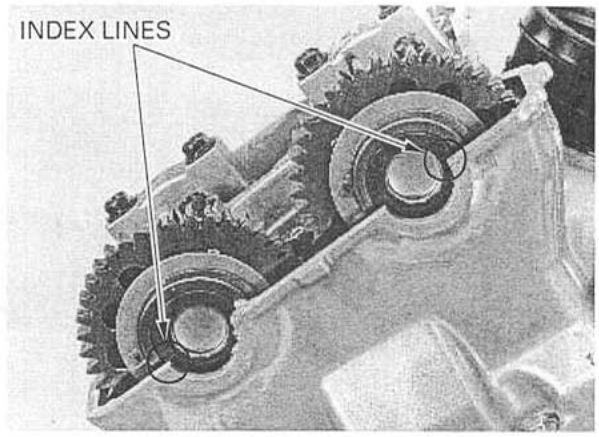

Remove the camshaft holder bolts, camshaft holders, dowel pins and camshafts.

NOTE:

- Do not forcibly remove the dowel pins from the camshaft holders.

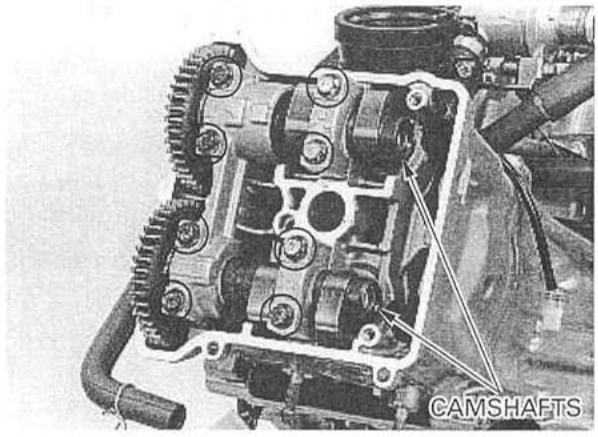

Remove the valve lifters and shims.

NOTE:

- Be careful not to damage the valve lifter bore.
- Shims may stick to the inside of the valve lifters. Do not allow the shims to fall into the crankcase.
- Mark all valve lifters and shims to ensure correct reassembly in their original locations.
- The valve lifter can be easily removed with a valve lapping tool or magnet.
- The shims can be easily removed with tweezers or a magnet.

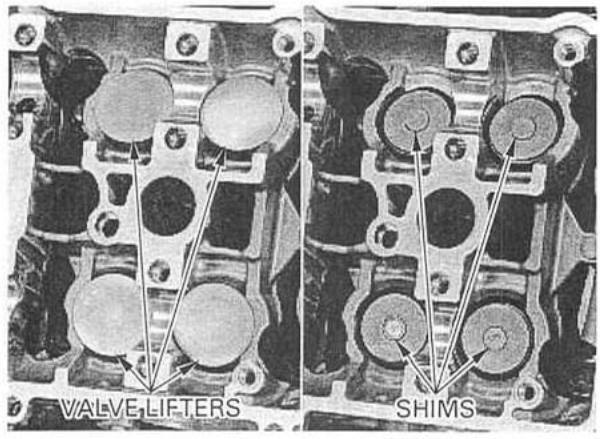

INSPECTION

CAMSHAFT

Check the cam and journal surfaces of the camshaft for scoring, scratches or evidence of insufficient lubrication.
Check the oil holes in the camshaft for clogs.

Measure the camshaft runout using a dial indicator.

SERVICE LIMIT: 0.05 mm (0.002 in)

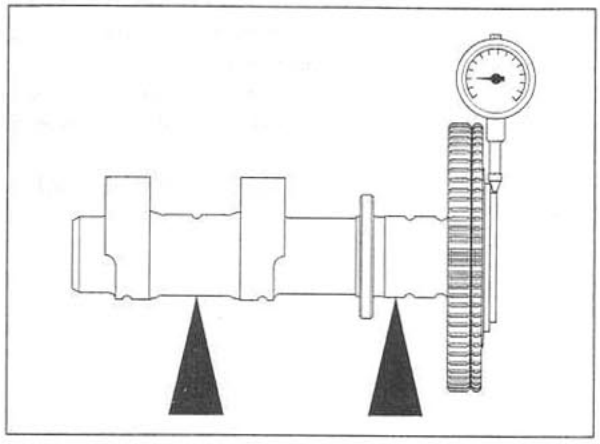

Measure each cam lobe height using a micrometer.

SERVICE LIMITS: IN : 38.880 mm (1.5307 in)
EX : 38.430 mm (1.5130 in)

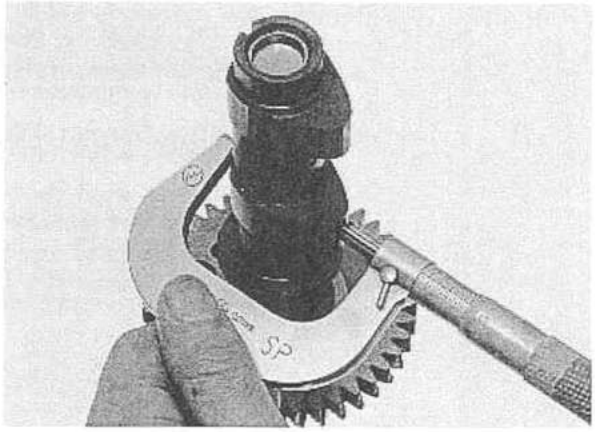

CAMSHAFT JOURNAL

Check the camshaft journal surfaces of the camshaft holders and cylinder head for scoring, scratches or evidence of insufficient lubrication.

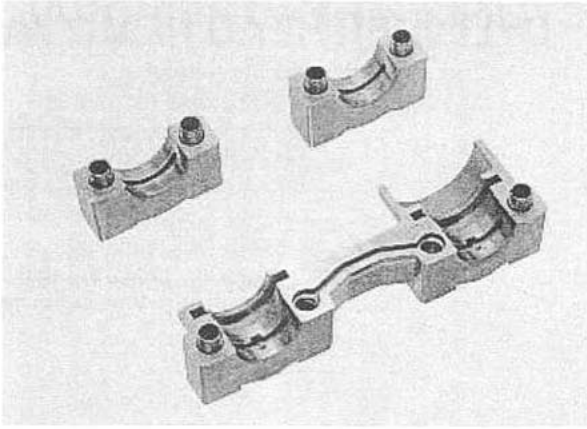

Do not rotate the camshaft during inspection.

CAMSHAFT OIL CLEARANCE

Wipe any oil from the journals of the cylinder head, camshaft and camshaft holder.
Put the camshaft onto the cylinder head and lay a strip of plastigauge lengthwise on each camshaft journal.

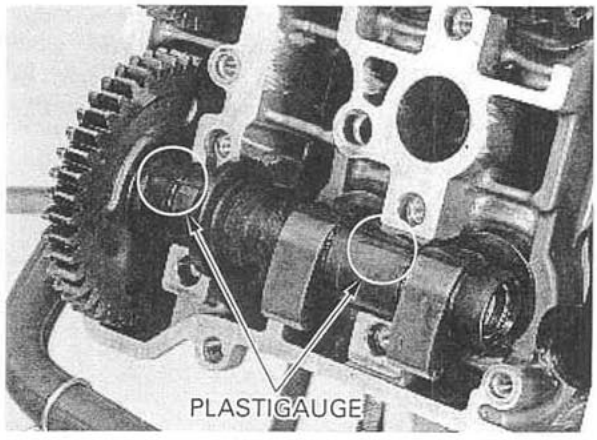

Apply oil to the threads and seating surfaces of the camshaft holder bolts.
Install the camshaft holder and tighten the bolts in a crisscross pattern in two or three steps.

TORQUE: 23 N·m (2.3 kgf·m , 17 lbf·ft)

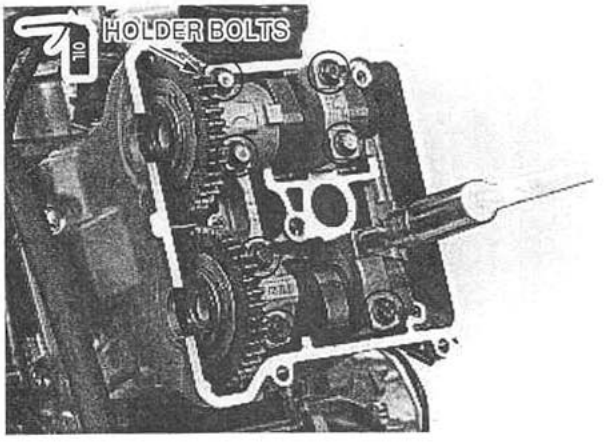

Remove the camshaft holder and measure the compressed plastigauge at its widest point on the camshaft to determine the oil clearance.

SERVICE LIMIT: 0.100 mm (0.0039 in)

If the oil clearance exceeds the service limit, replace the camshaft and recheck the oil clearance.
Replace the cylinder head and camshaft holders as a set if the oil clearance still exceeds the service limit.

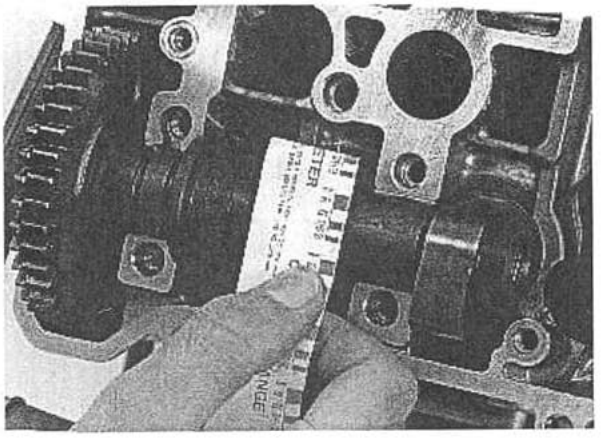

CYLINDER HEAD REMOVAL

Remove the following:
- exhaust system (page 2-5)
- oil cooler for front cylinder head (page 4-8)
- throttle body assembly (page 5-61)
- radiators for front cylinder head (page 6-6)
- camshafts (page 8-3)
- bolt, water hose joint and O-ring
- cam pulse generator for rear cylinder head (page 5-58)

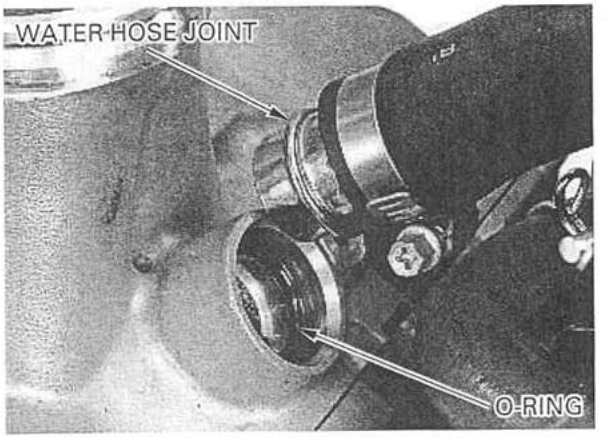

Remove the two 6 mm cylinder head bolts.
Loosen the four 11 mm cylinder head bolts in a crisscross pattern in two or three steps, and remove them and the washers.
Remove the cylinder head.

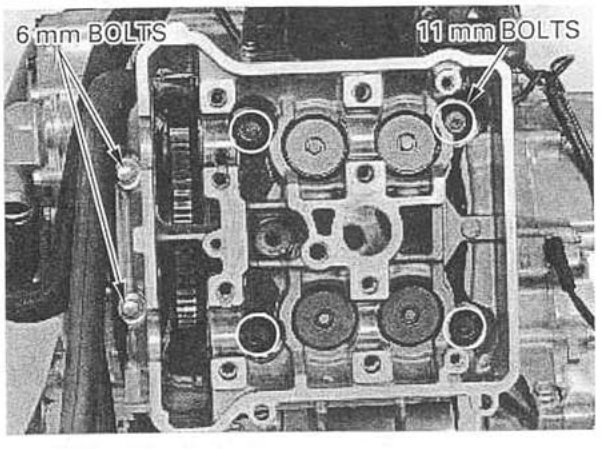

INSPECTION

CYLINDER HEAD

Remove the carbon deposits from the combustion chamber, being careful not to damage the gasket surface.
Check the spark plug hole and valve areas for cracks.

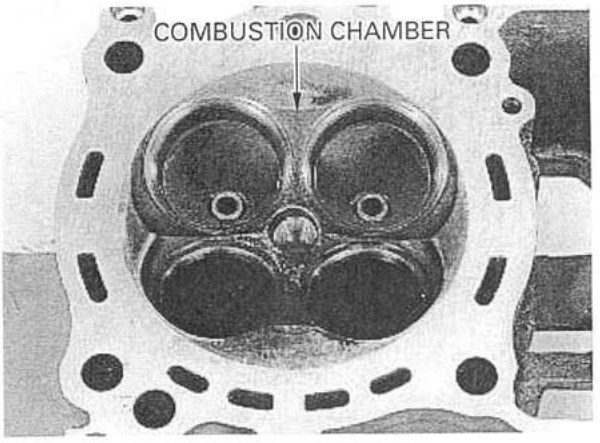

Check the cylinder head for warpage with a straight edge and feeler gauge.

SERVICE LIMIT: 0.10 mm (0.004 in)

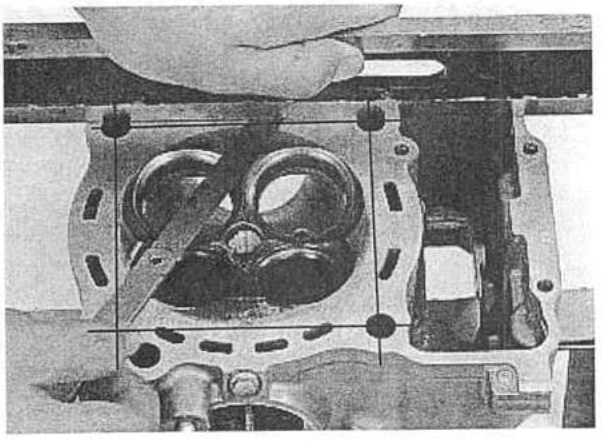

Check the valve lifter bore for scoring, scratches or damage.
Measure the each valve lifter bore I.D.

SERVICE LIMIT: 34.04 mm (1.340 in)

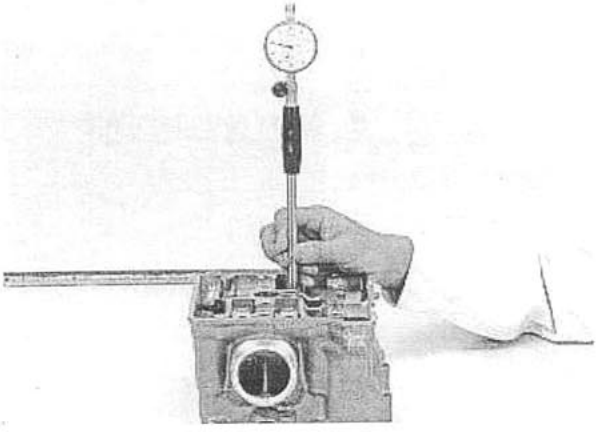

VALVE LIFTER

Check the valve lifter for scoring, scratches or damage.
Measure the each valve lifter O.D.

SERVICE LIMIT: 33.97 mm (1.337 in)

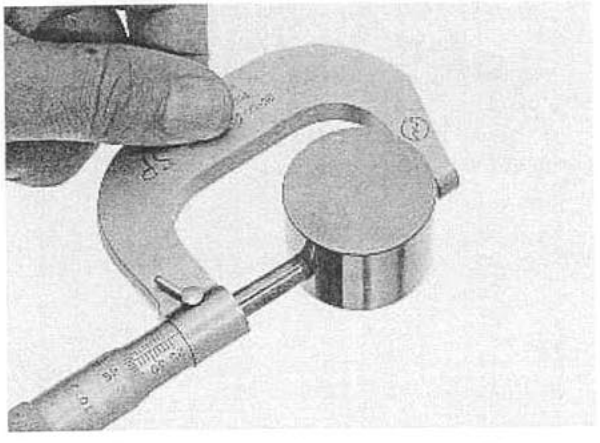

VALVE SPRING

Measure the valve spring free length.

SERVICE LIMITS: Inner: 40.0 mm (1.57 in)
Outer: 44.8 mm (1.76 in)

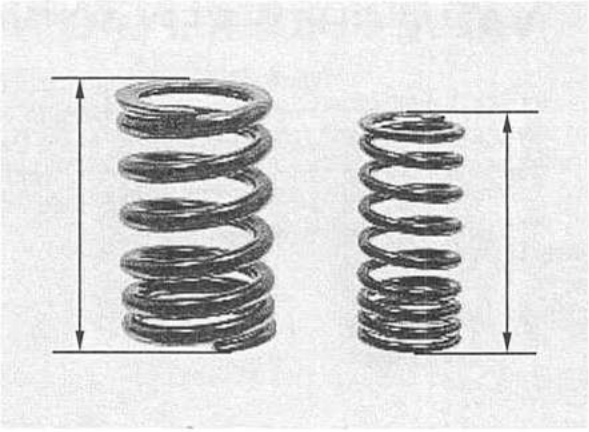

VALVE/VALVE GUIDE

Check that the valve moves smoothly in the guide.
Check the valve for bends, burns or abnormal wear.
Measure each valve stem O.D. and record it.

SERVICE LIMITS:IN: 5.965 mm (0.2348 in)
EX: 5.955 mm (0.2344 in)

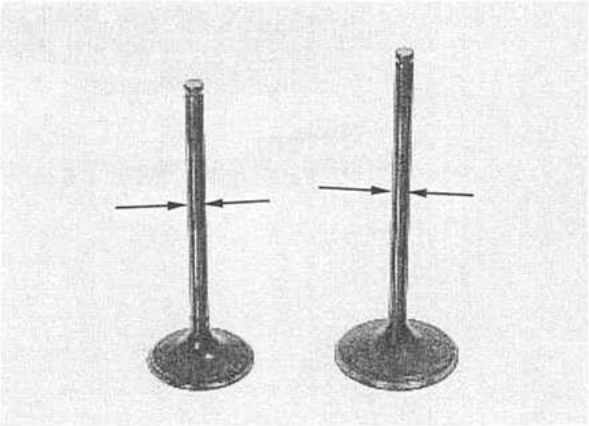

Ream the valve guide to remove any carbon build-up before measuring the guide.
Insert the reamer from the combustion chamber side of the head and always rotate the reamer clockwise.

TOOL:
Valve guide reamer, 6.0 mm 07VMH-MBB0200 or 07VMH-MBB020A (U.S.A. only)

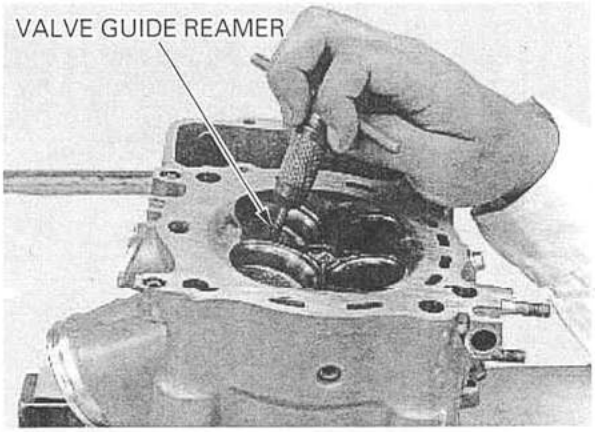

Measure each valve guide I.D. and record it.

SERVICE LIMIT: 6.040 mm (0.2378 in)

Subtract each valve stem O.D. from the corresponding guide I.D. to obtain the stem-to-guide clearance.

SERVICE LIMITS: IN: 0.075 mm (0.0030 in)
EX: 0.085 mm (0.0033 in)

Inspect and reface the valve seats whenever the valve guides are replaced (page 8-11).

If the stem-to-guide clearance exceeds the service limit, determine if a new guide with standard dimensions would bring the clearance within tolerance.
If so, replace any guides as necessary and ream to fit.
If the stem-to-guide clearance exceeds the service limit with a new guide, also replace the valve.

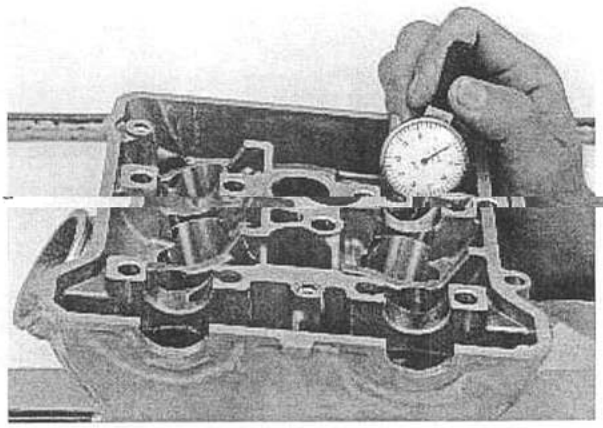

REFACING

NOTE:

- Follow the refacing manufacturer's operating instructions.
- Be careful not to grind the seat more than necessary.

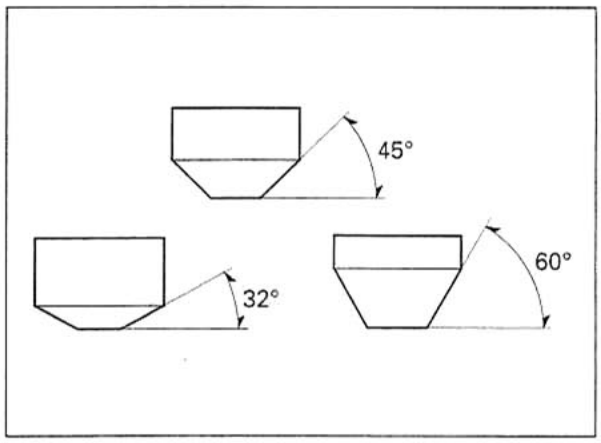

If the contact area is too high on the valve, the seat must be lowered using a 32° flat cutter.

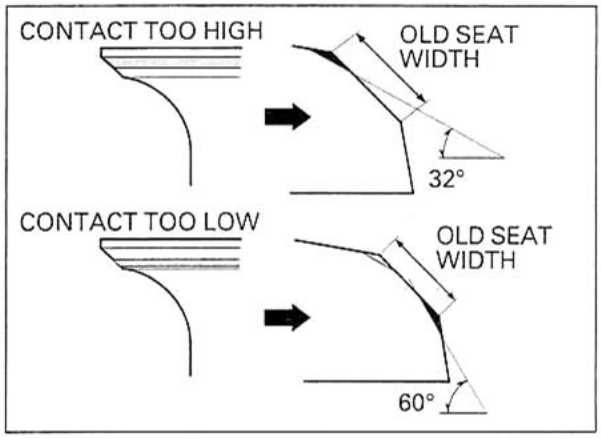

TOOLS:

Flat cutter, 42 mm (IN)	07780-0013000
Flat cutter, 36 mm (EX)	07780-0013500
Cutter holder, 6 mm	07VMH-MBB0100

or equivalent commercially available in U.S.A.

If the contact area is too low on the valve, the seat must be raised using a 60° interior cutter.

TOOLS:

Interior cutter, 42 mm (IN)	07780-0014400
Interior cutter, 37.5 mm (EX)	07780-0014100
Cutter holder, 6 mm	07VMH-MBB0100

or equivalent commercially available in U.S.A.

Using a 45° seat cutter, remove any roughness or irregularities from the seat.

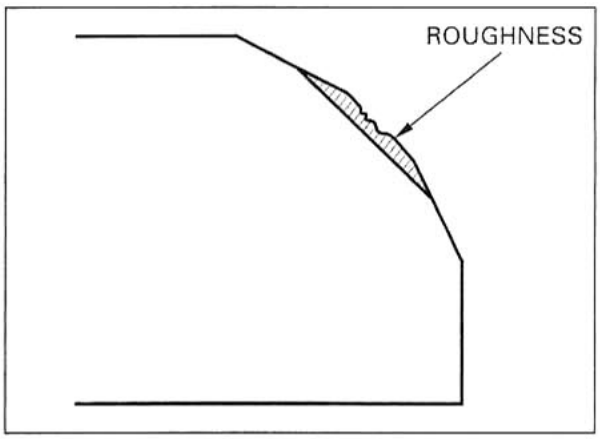

TOOLS:

Seat cutter, 42 mm (IN)	07780-0010900
Seat cutter, 35 mm (EX)	07780-0010400
Cutter holder, 6 mm	07VMH-MBB0100

or equivalent commercially available in U.S.A.

Using a 32° flat cutter, remove 1/4 of the existing valve seat material.

TOOLS:

Flat cutter, 42 mm (IN)	07780-0013000
Flat cutter, 36 mm (EX)	07780-0013500
Cutter holder, 6 mm	07VMH-MBB0100

or equivalent commercially available in U.S.A.

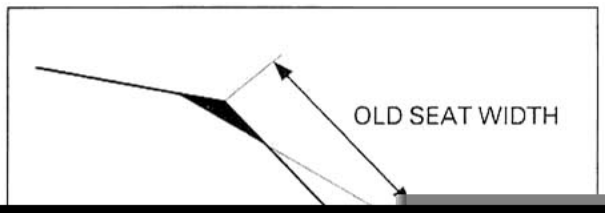

Using a 60° interior cutter, remove 1/4 of the existing valve seat material.

TOOLS:

Interior cutter, 42 mm (IN)	07780-0014400
Interior cutter, 37.5 mm (EX)	07780-0014100
Cutter holder, 6 mm	07VMH-MBB0100

or equivalent commercially available in U.S.A.

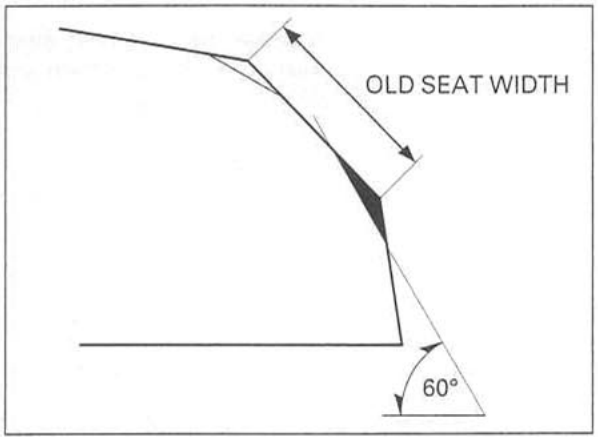

Using a 45° seat cutter, cut the seat to the proper width.

TOOLS:

Seat cutter, 42 mm (IN)	07780-0010900
Seat cutter, 35 mm (EX)	07780-0010400
Cutter holder, 6 mm	07VMH-MBB0100

or equivalent commercially available in U.S.A.

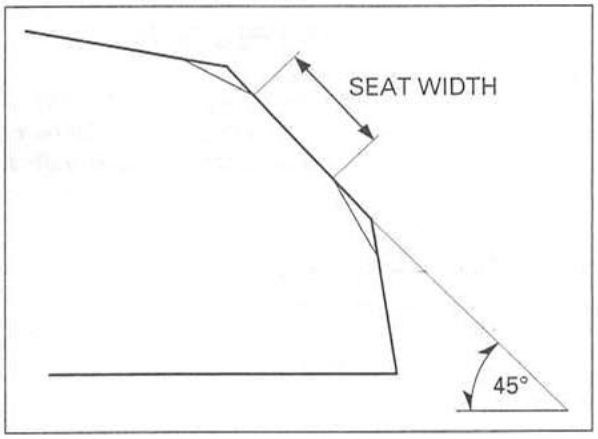

Excessive lapping pressure may deform or damage the seat.
Change the angle of the lapping tool frequently to prevent uneven seat wear.
Do not allow any lapping compound to enter the guides.

After cutting the seat, apply lapping compound to the valve face, and lap the valve using light pressure.

After lapping, wash any residual compound off the cylinder head and valve, and recheck the seat contact.

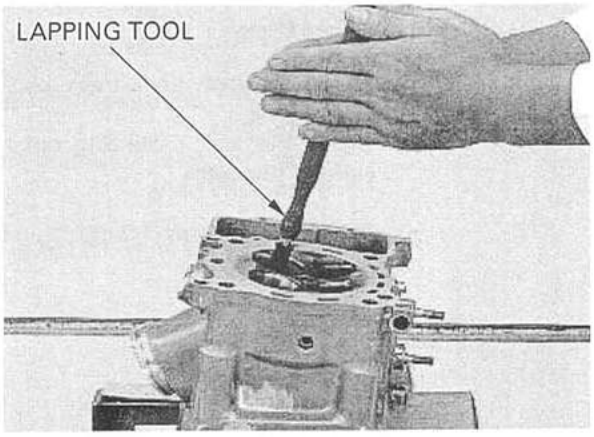

CAM GEAR TRAIN

REMOVAL

Remove the cylinder head (page 8-6).

Remove the cam gear train setting bolt and sealing washer.

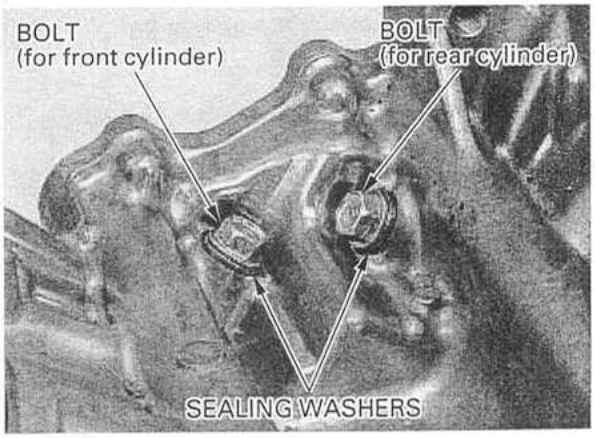

Remove the four cam gear train mounting bolts, washers, cam gear train assembly and two dowel pins.

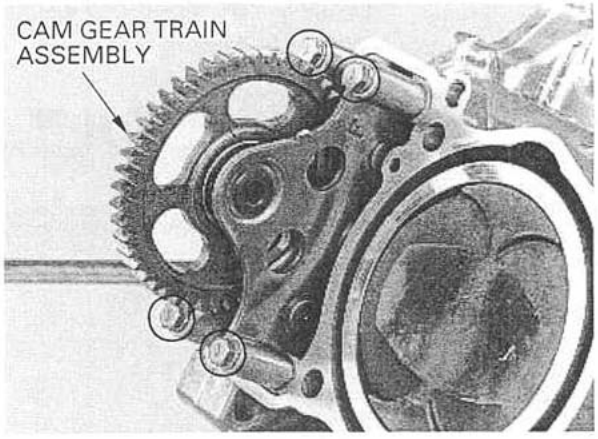

INSPECTION

Check the gear teeth for wear or damage.
Check the gear case for deformation or damage.
Replace the cam gear train assembly if necessary.

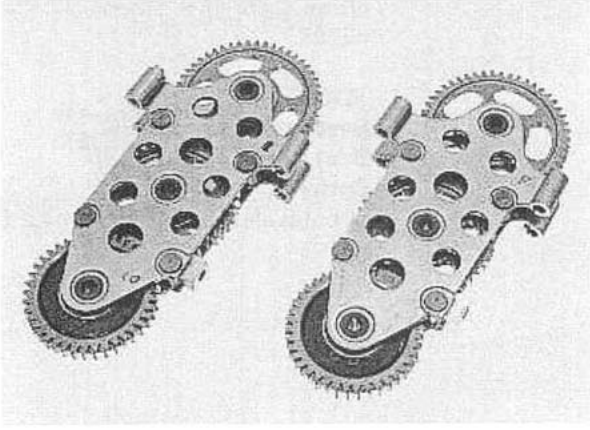

INSTALLATION

Install the cam gear train assembly with the two dowel pins.
Install the four mounting bolts and washers, and tighten the bolts.

TORQUE: 12 N·m (1.2 kgf·m , 9 lbf·ft)

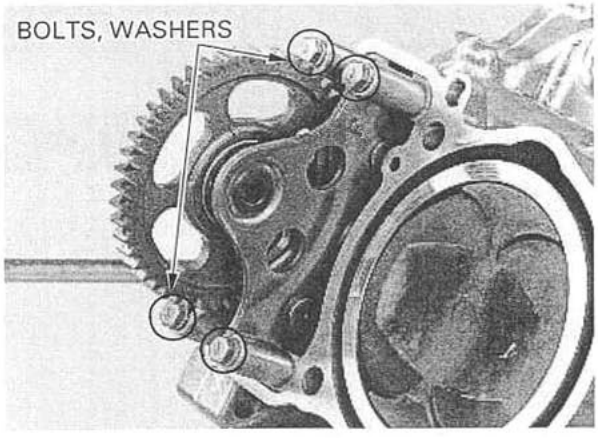

Install the setting bolt with a new sealing washer and tighten it.

TORQUE: 25 N·m (2.5 kgf·m , 18 lbf·ft)

Install the cylinder head (page 8-16).

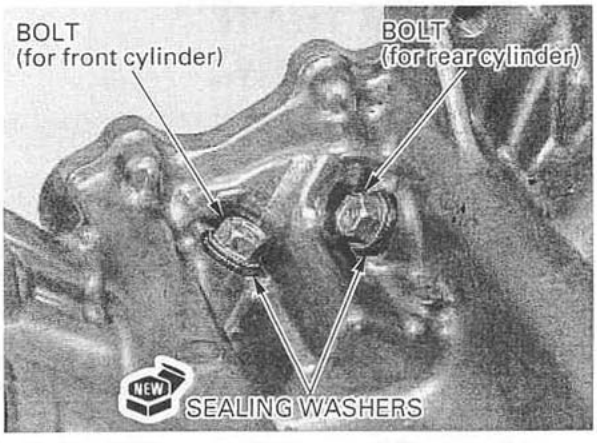

Install the lifter bore protector made from a film container into the valve lifter bore.

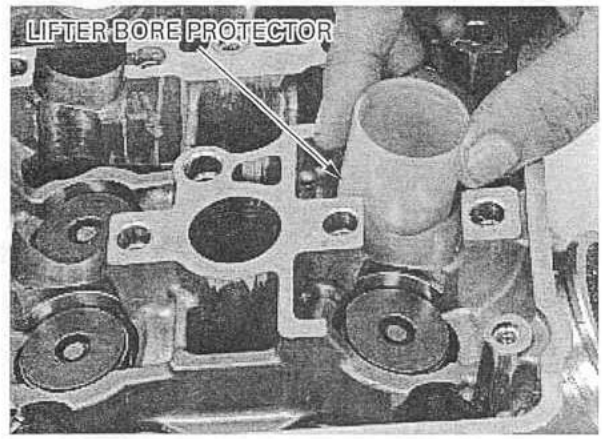

Grease the cotters to ease installation. To prevent loss of tension, do not compress the valve springs more than necessary to install the cotters.

Install the valve spring cotters using the valve spring compressor.

TOOL:
Valve spring compressor 07757-0010000

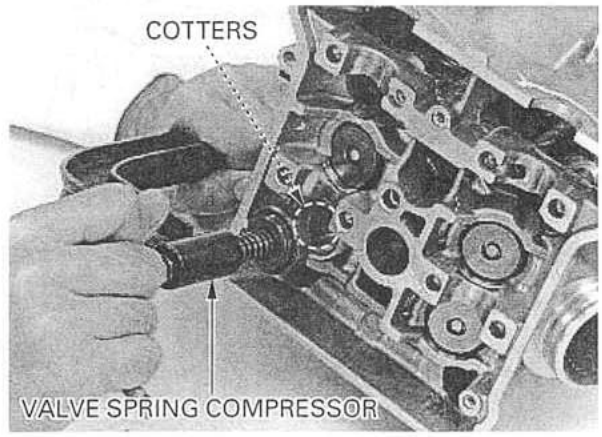

Support the cylinder head so the valve heads will not contact anything that cause damage.
Tap the valve stems gently with two plastic hammers as shown to seat the cotters firmly.

Install and tighten the spark plug.

TORQUE: 18 N·m (1.8 kgf·m , 13 lbf·ft)

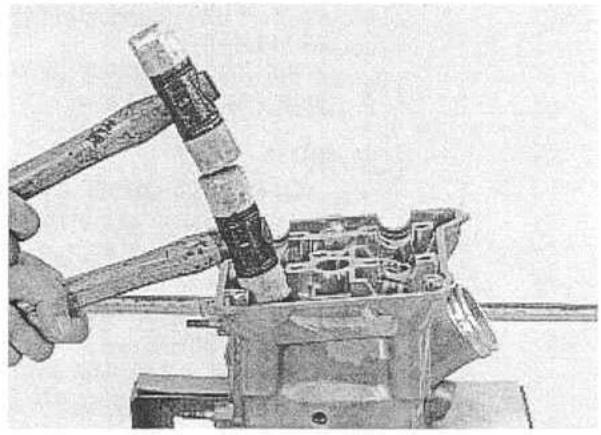

CYLINDER HEAD INSTALLATION

Install the dowel pins and a new gasket.

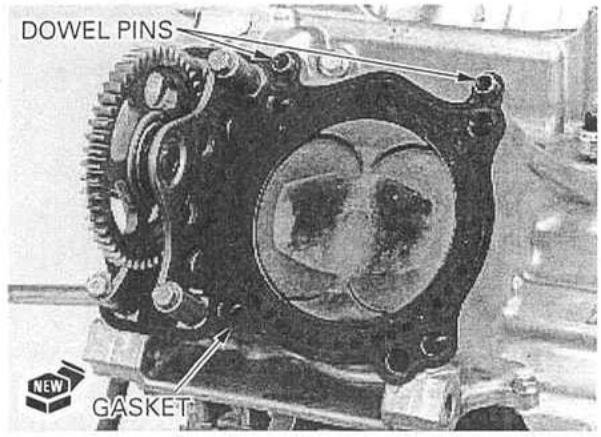

Install the cylinder head onto the cylinder.

Apply oil to the threads and seating surfaces of the 11 mm cylinder head bolts and install them.
Tighten the 11 mm bolts in a crisscross pattern in two or three steps.

TORQUE: 64 N·m (6.5 kgf·m , 47 lbf·ft) for new bolt
70 N·m (7.1 kgf·m , 51 lbf·ft) for used bolt

Install and tighten the two 6 mm bolts securely.

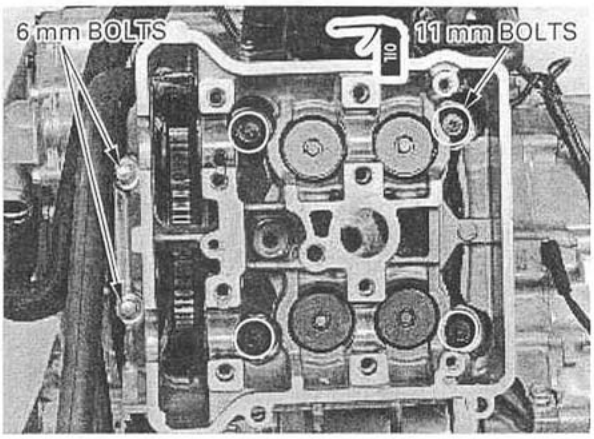

Install a new O-ring into the cylinder head.
Install the water hose joint and tighten the bolt.

Install the following:
- camshafts
- radiators (page 6-6)
- cam pulse generator (page 5-58)
- throttle body assembly (page 5-72)
- oil cooler (page 4-10)
- exhaust system (page 2-7)

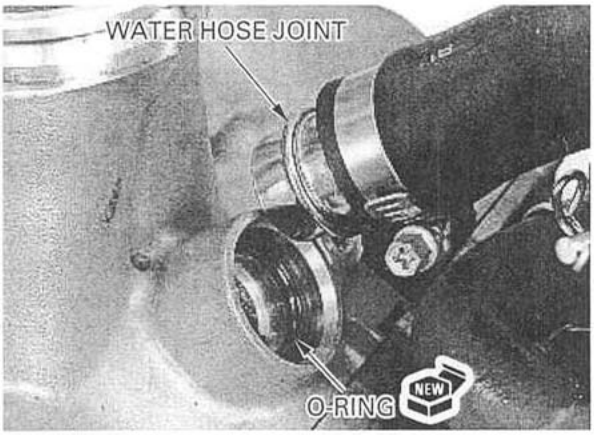

CAMSHAFT INSTALLATION

NOTE:
- If both front and rear cylinder camshafts were serviced, install the front cylinder camshafts first, then install the rear cylinder camshafts.
- Even if you are servicing either the front or rear cylinder head, the other cylinder head cover must be removed and the other cylinder camshaft position must be checked.

Install the valve shims in their original locations.

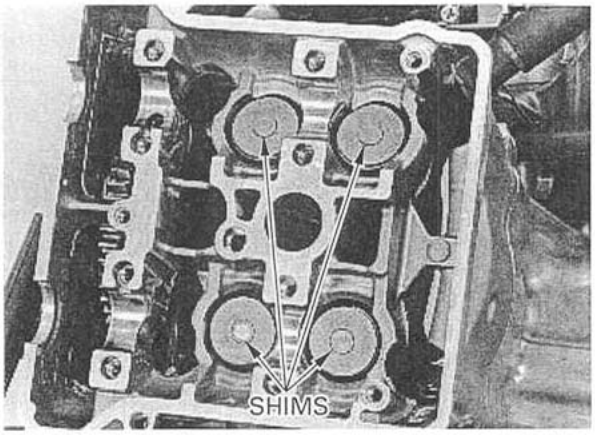

Coat the outer surfaces of the valve lifters with molybdenum oil solution.
Install the valve lifters in their original lifter bores, being careful not to damage the sliding surfaces of the lifters and bores.

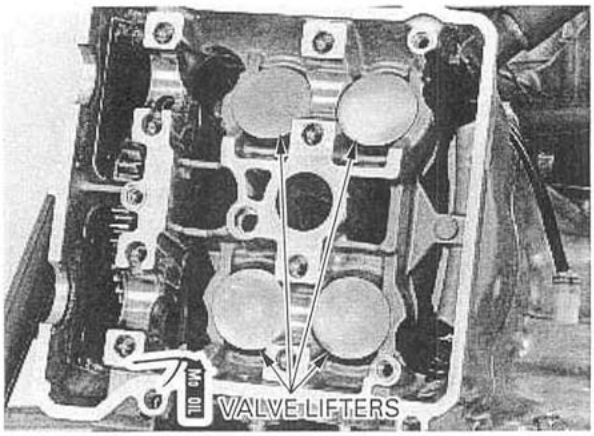

The camshaft has the following identification mark:
FR IN: Front cylinder intake camshaft
FR EX: Front cylinder exhaust camshaft
RR IN: Rear cylinder intake camshaft
RR EX: Rear cylinder exhaust camshaft

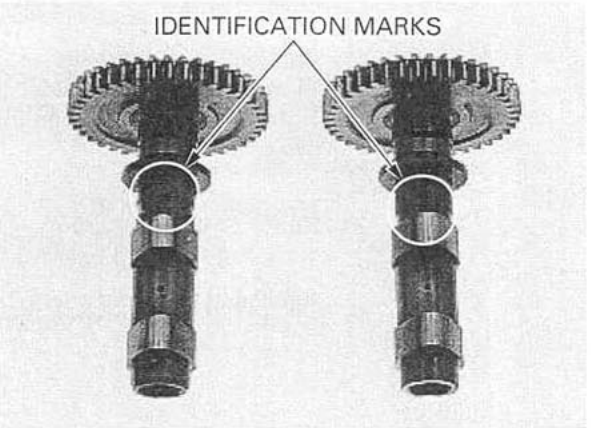

Camshaft holder A has the following identification mark:
F I: Front cylinder intake camshaft holder
F E: Front cylinder exhaust camshaft holder
R I: Rear cylinder intake camshaft holder
R E: Rear cylinder exhaust camshaft holder

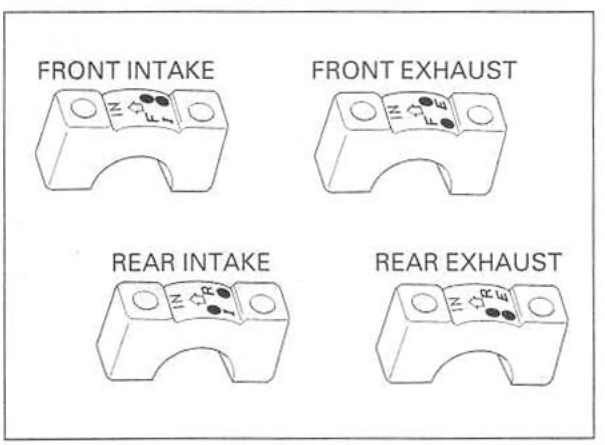

FRONT CYLINDER CAMSHAFTS

If the rear cylinder camshafts have not been serviced, remove the rear cylinder head cover and check the rear cylinder camshaft position as follows:

Turn the crankshaft counterclockwise and align "R T" mark on the flywheel with the index mark on the left crankcase cover.

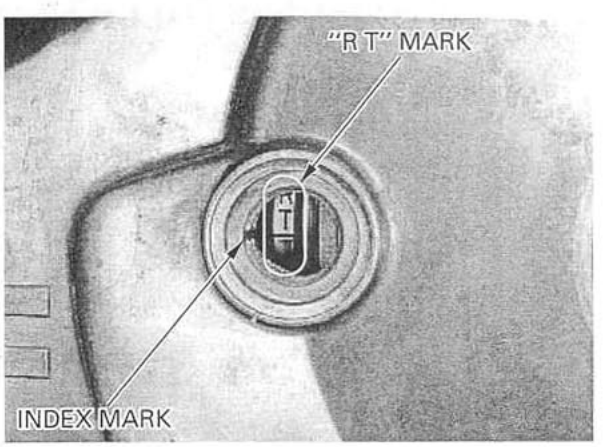

Check the index lines on the rear cylinder camshafts.

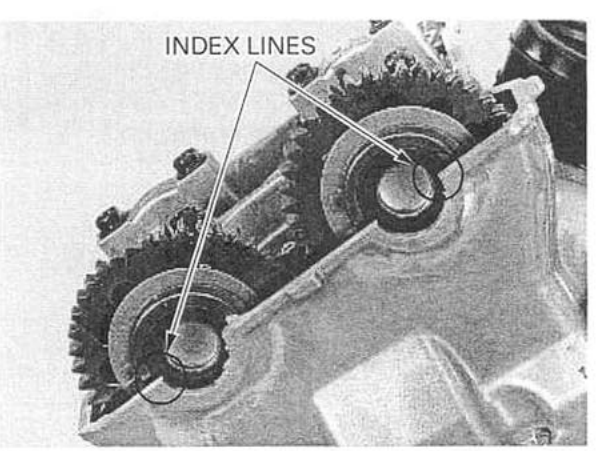

If the index lines are facing outward, turn the crankshaft counterclockwise 1-1/4 turn (450°) and align the "F T" mark with the index mark.

If the index lines are facing inward, turn the crankshaft counterclockwise 1/4 turn (90°) and align the "F T" mark with the index mark.

If the rear cylinder camshafts have been serviced, turn the crankshaft counterclockwise and align the "F T" mark with the index mark.

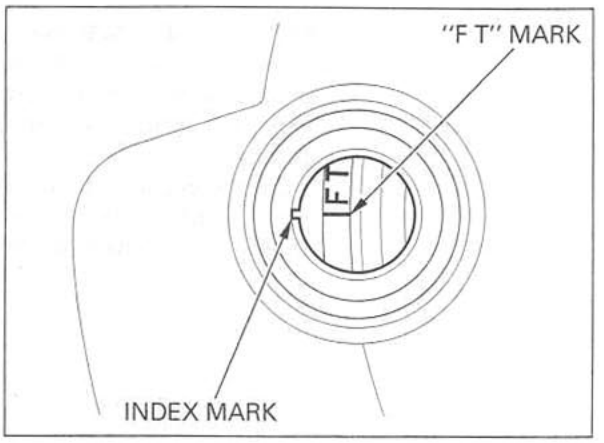

Apply molybdenum oil solution to the camshaft journals and cam lobes.
Install the camshafts in their proper locations so the index lines on the camshafts are flush with the cylinder head surface and face outward.

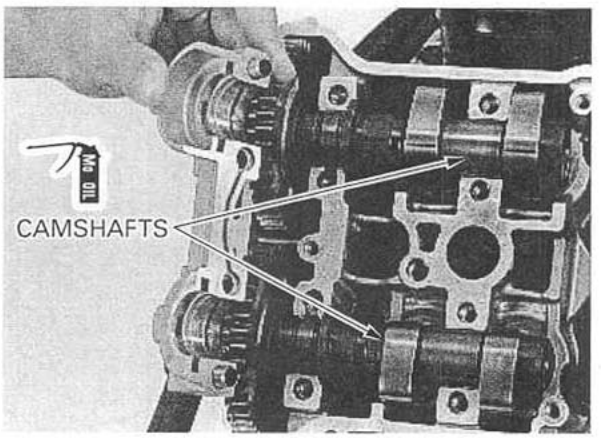

Install the dowel pins and camshaft holder B in their proper location.
Install the dowel pins and camshaft holders A in their proper locations with the "IN" (arrow) mark facing to the intake side.
Apply oil to the threads and seating surfaces of the camshaft holder bolts.
Install the bolts and tighten them in a crisscross pattern in two or three steps.

TORQUE: 23 N·m (2.3 kgf·m , 17 lbf·ft)

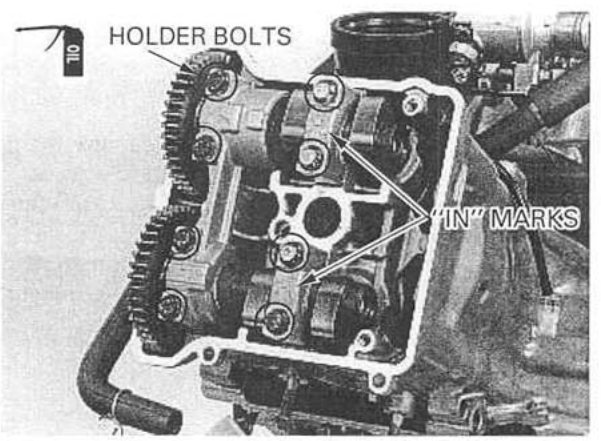

Make sure the index lines on the camshafts are flush with the cylinder head surface.

If the rear cylinder camshafts have not been serviced, install the cylinder head covers (page 3-12).

If the rear cylinder camshafts have been serviced, install the rear cylinder camshafts (page 8-20).

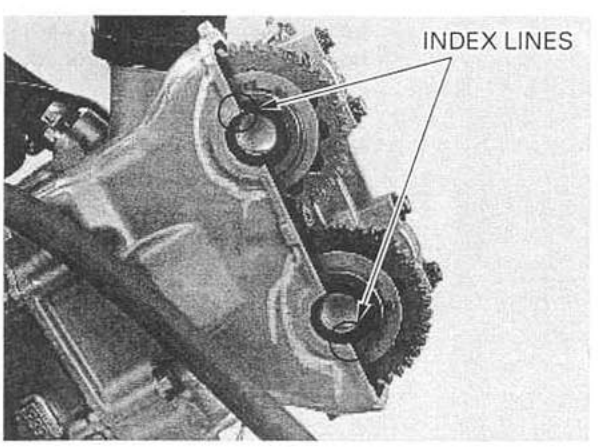

9. CLUTCH/GEARSHIFT LINKAGE

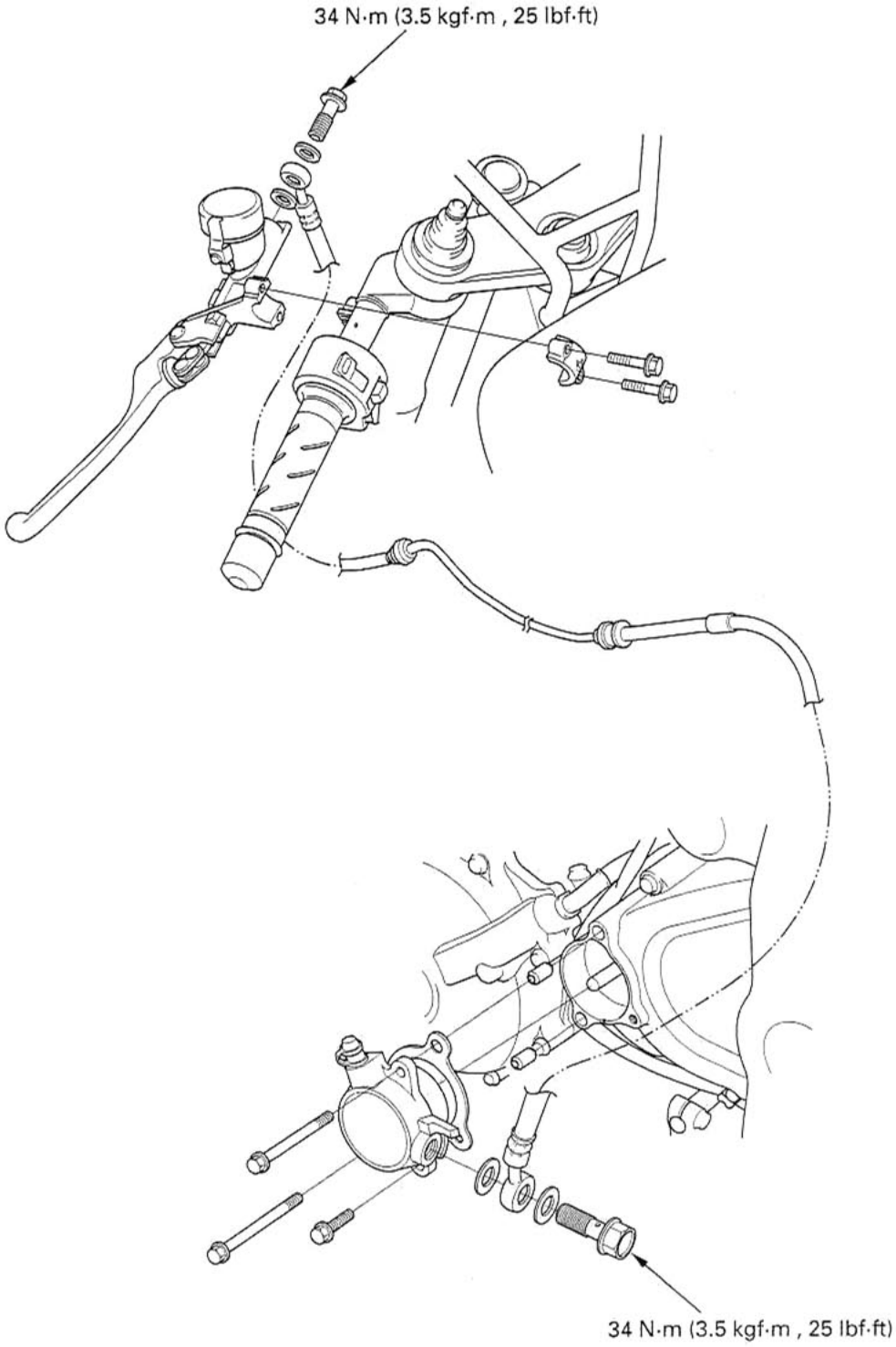

9

SERVICE INFORMATION

GENERAL

- The clutch system can be serviced with the engine in the frame.
- DOT 4 brake fluid is used for the hydraulic clutch and is referred to as clutch fluid in this section. Do not use other types of fluid as they are not compatible.
- Spilled clutch (brake) fluid will severely damage the plastic parts and painted surfaces. It is also harmful to some rubber parts. Be careful whenever you remove the reservoir cap; make sure the reservoir is horizontal first.
- Never allow contaminants (dirt, water, etc.) to get into an open reservoir.
- Once the hydraulic system has been opened, the system must be bled.
- Always use fresh DOT 4 brake fluid from a sealed container when servicing the system. Do not mix different types of fluid as they may not be compatible.
- Engine oil viscosity and level, and the use of oil additives have an effect on clutch disengagement. Oil additives of any kind are specifically not recommended. When the clutch does not disengage or the motorcycle creeps with the clutch disengaged, inspect the engine oil viscosity and level before servicing the clutch system.

SPECIFICATIONS

Unit: mm (in)

ITEM		STANDARD	SERVICE LIMIT
Specified clutch fluid		DOT 4 brake fluid	————
Clutch master cylinder	Cylinder I.D.	12.700 – 12.743 (0.5000 – 0.5017)	12.755 (0.5022)
	Piston O.D.	12.657 – 12.684 (0.4983 – 0.4994)	12.645 (0.4978)
Clutch	Spring free length	60.9 (2.40)	57.9 (2.28)
	Disc thickness	3.72 – 3.88 (0.146 – 0.153)	3.5 (0.14)
	Plate warpage	————	0.30 (0.012)
Clutch outer guide	I.D.	28.000 – 28.021 (1.1024 – 1.1032)	28.031 (1.1036)
	O.D.	34.997 – 35.013 (1.3778 – 1.3785)	34.987 (1.3774)
Mainshaft O.D. at clutch outer guide		27.980 – 27.993 (1.1016 – 1.1021)	27.970 (1.1012)

TORQUE VALUES

Clutch slave cylinder bleed valve	9 N·m (0.9 kgf·m , 6.5 lbf·ft)	
Clutch reservoir cap stopper plate screw	1 N·m (0.1 kgf·m , 0.7 lbf·ft)	
Clutch reservoir mounting screw	2 N·m (0.2 kgf·m , 1.4 lbf·ft)	Apply locking agent to the threads
Clutch lever pivot bolt	1 N·m (0.1 kgf·m , 0.7 lbf·ft)	
Clutch lever pivot nut	6 N·m (0.6 kgf·m , 4.3 lbf·ft)	
Clutch hose oil bolt	34 N·m (3.5 kgf·m , 25 lbf·ft)	
Clutch bolt	12 N·m (1.2 kgf·m , 9 lbf·ft)	
Clutch center lock nut	127 N·m (13.0 kgf·m , 94 lbf·ft)	Apply oil to the threads and seating surface and stake
Oil pump driven sprocket bolt	15 N·m (1.5 kgf·m , 11 lbf·ft)	Apply locking agent to the threads
Gearshift cam bolt	23 N·m (2.3 kgf·m , 17 lbf·ft)	Apply locking agent to the threads
Shift drum stopper arm pivot bolt	12 N·m (1.2 kgf·m , 9 lbf·ft)	
Primary drive gear bolt	88 N·m (9.0 kgf·m , 65 lbf·ft)	Apply oil to the threads and seating surface

TOOLS

Snap ring pliers	07914-SA50001	or 07914-3230001
Clutch center holder	07724-0050002	or equivalent commercially available in U.S.A.
Driver	07749-0010000	
Attachment, 32 × 35 mm	07746-0010100	
Pilot, 17 mm	07746-0040400	
Attachment, 37 × 40 mm	07746-0010200	
Attachment, 42 × 47 mm	07746-0010300	
Pilot, 35 mm	07746-0040800	
Gear holder, 2.5	07724-0010100	or 07724-001A100 (U.S.A. only)

TROUBLESHOOTING

Clutch lever too hard
- Sticking piston
- Clogged hydraulic system

Clutch slips
- Sticking piston
- Clogged hydraulic system
- Discs worn
- Weak clutch spring

Clutch will not disengage or motorcycle creeps with clutch disengaged
- Air in hydraulic system
- Low clutch fluid level
- Sticking piston
- Leaking hydraulic system
- Warped plates
- Oil level too high, improper oil viscosity or oil additive used.

CLUTCH FLUID REPLACEMENT/ AIR BLEEDING

CLUTCH FLUID DRAINING

Do not allow foreign material to enter the system when filling the reservoir.

Turn the handlebar to the right until the reservoir is level, and remove the stopper plate, reservoir cap, set plate and diaphragm.

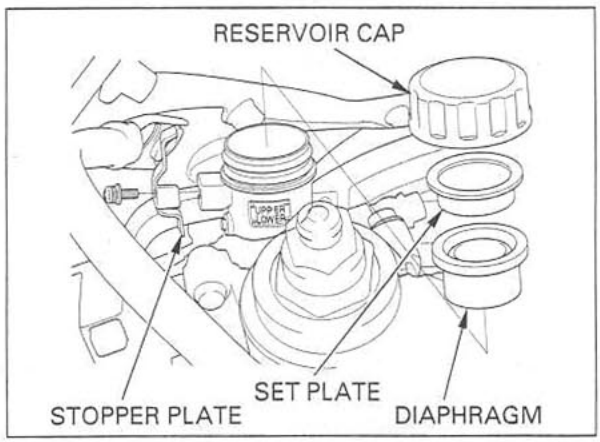

Connect a bleed hose to the clutch slave cylinder bleed valve.
Loosen the bleed valve and pump the clutch lever until fluid stops flowing out of the bleed valve.

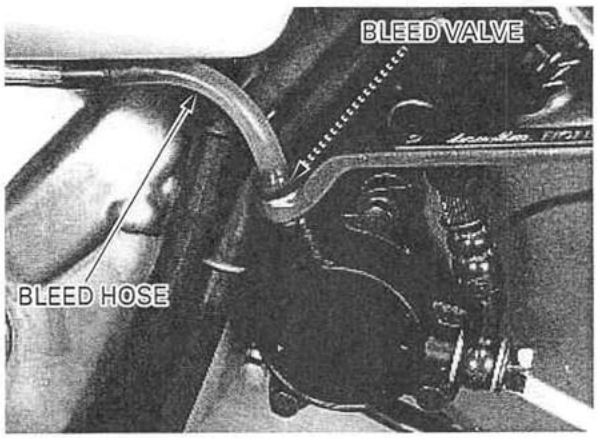

CLUTCH FLUID FILLING/BLEEDING

Connect a commercially available brake bleeder to the bleed valve of the clutch slave cylinder at the position as shown.
Pump the brake bleeder and loosen the bleed valve.
If an automatic refill system is not used, add brake fluid when the fluid level in the reservoir is low.

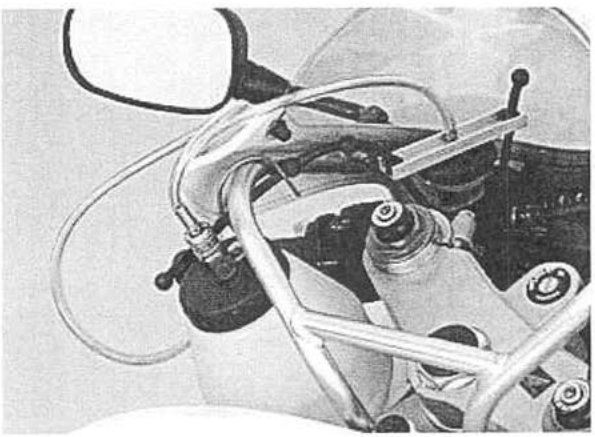

Repeat above procedure until sufficient amount of the fluid flows out from the bleed valve.
Close the bleed valve.

NOTE:
- Check the fluid level often while bleeding the clutch to prevent air from being pumped into the system.
- When using a brake bleeding tool, follow the manufacturer's operating instructions.

If air is entering the bleeder from around the bleed valve threads, seal the threads with teflon tape.

Repeat the above procedures until new fluid comes out of the bleed valve and air bubbles do not appear in the plastic hose.

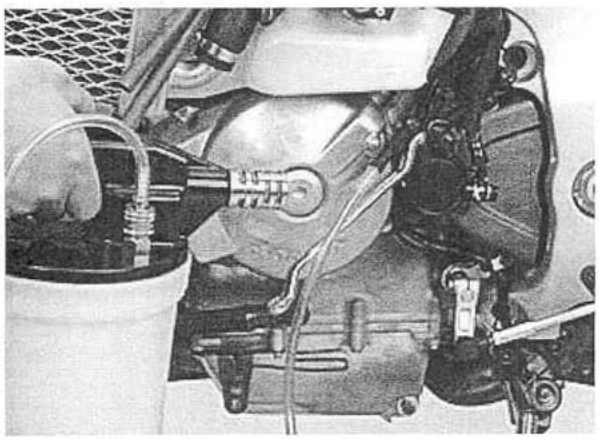

If a brake bleeder is not available, use the following procedure:
Pressurize the system with the clutch lever until lever resistance is felt.

Connect a bleed hose to the bleed valve and bleed the system as follows:

1. Squeeze the clutch lever, open the bleed valve 1/2 turn and then close it.

NOTE:

- Do not release the clutch lever until the bleed valve has been closed.

2. Release the clutch lever slowly and wait several seconds after it reaches the end of its travel.

Repeat steps 1 and 2 until air bubbles do not appear in the bleed hose.

Tighten the bleed valve.

TORQUE: 9 N·m (0.9 kgf·m , 6.5 lbf·ft)

Fill the reservoir to the upper level mark with DOT 4 brake fluid from a sealed container.

Install the diaphragm, set plate, reservoir cap and stopper plate, and tighten the stopper plate screw.

TORQUE: 1 N·m (0.1 kgf·m , 0.7 lbf·ft)

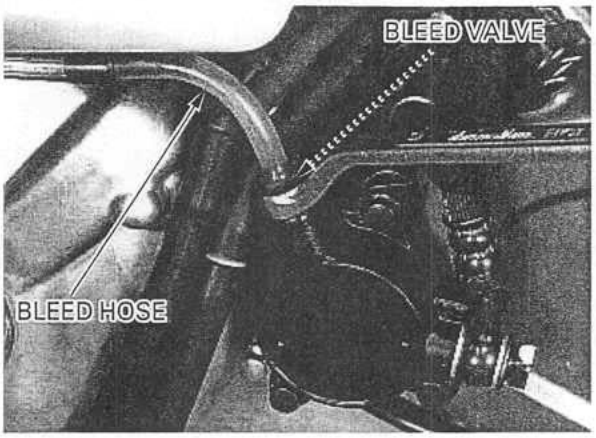

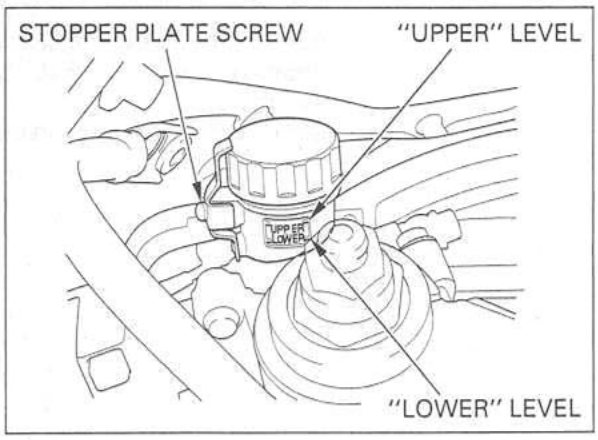

CLUTCH MASTER CYLINDER

DISASSEMBLY

Drain the clutch fluid from the hydraulic system (page 9-4).

Disconnect the clutch switch connectors.
Disconnect the clutch hose from the master cylinder by removing the oil bolt and sealing washers.

When removing the oil bolt, cover the end of the hose to prevent contamination.

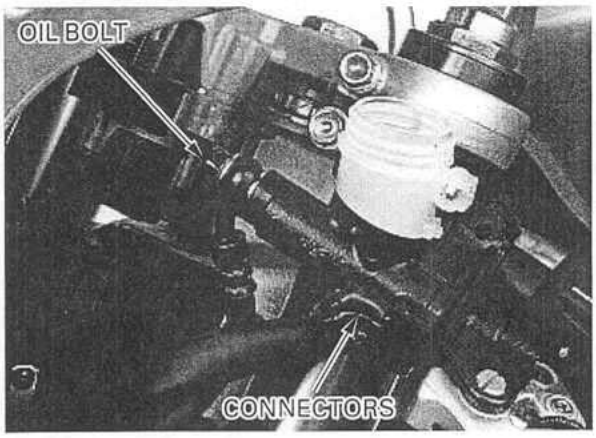

Remove the master cylinder holder bolts, holder and the master cylinder.

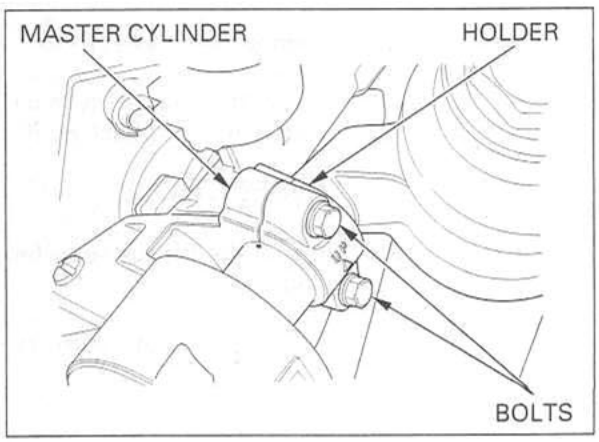

Check the master cylinder and piston for scoring or damage.

Measure the master cylinder I.D.

SERVICE LIMIT: 12.755 mm (0.5022 in)

Measure the master piston O.D.

SERVICE LIMIT: 12.645 mm (0.4978 in)

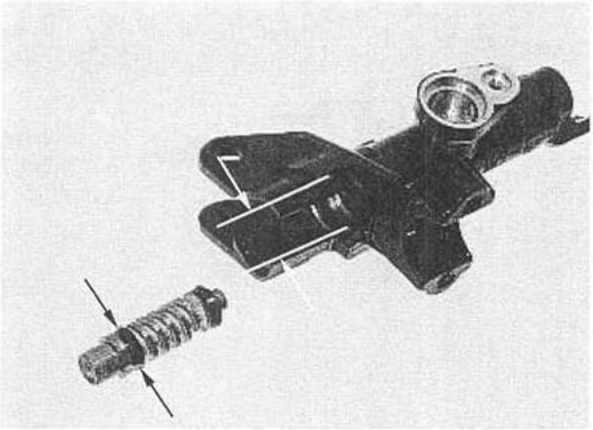

ASSEMBLY

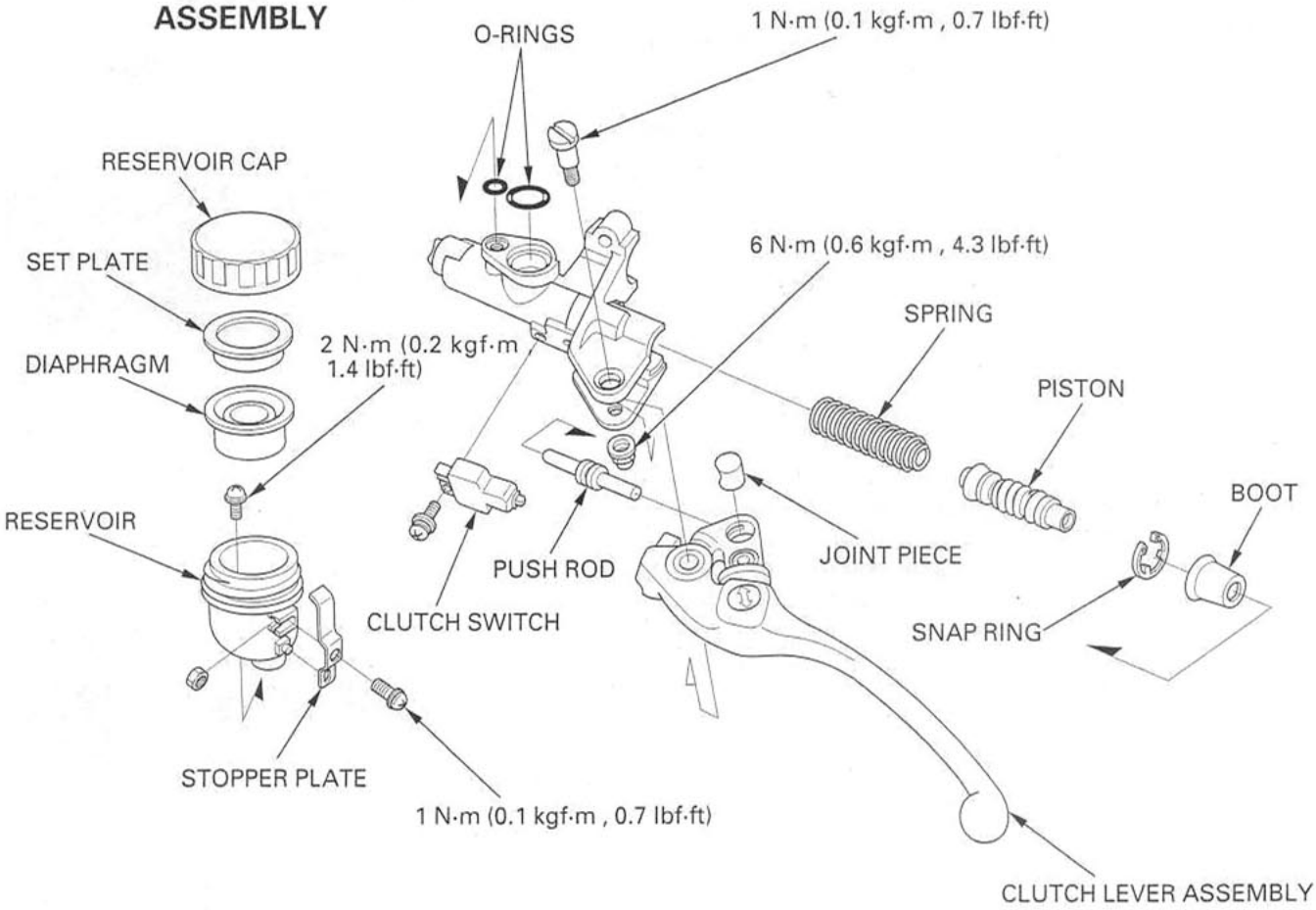

Coat the master piston and piston cups with clean clutch fluid.

Do not allow the piston cup lips to turn inside out.

Install the spring and master piston into the master cylinder.

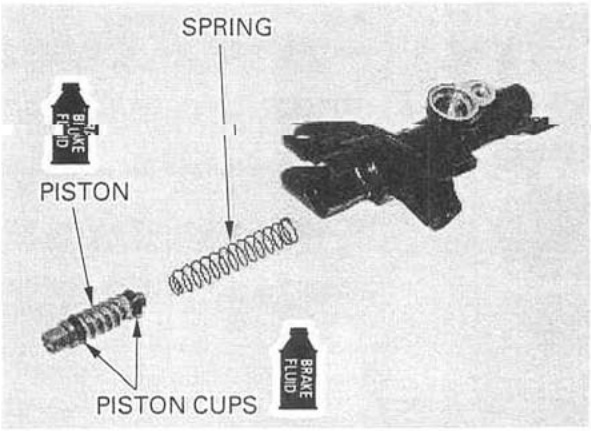

Be certain the snap ring is firmly seated in the groove.

Install the snap ring into the groove in the master cylinder, using the special tool.

TOOL:

Snap ring pliers	07914-SA50001 or 07914-3230001

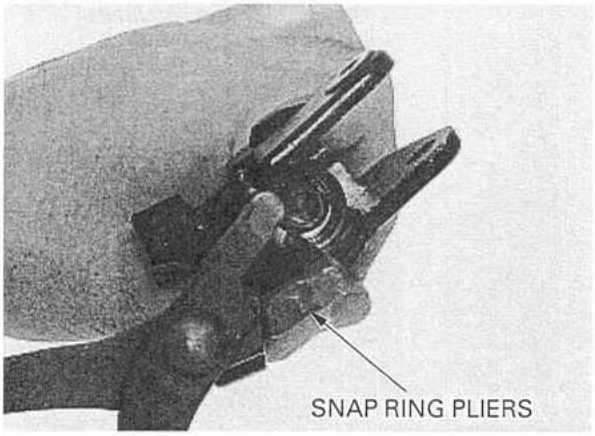

Apply silicone grease to the push rod contacting area of the master piston.
Install the boot onto the push rod.
Install the boot and push rod into the master cylinder.

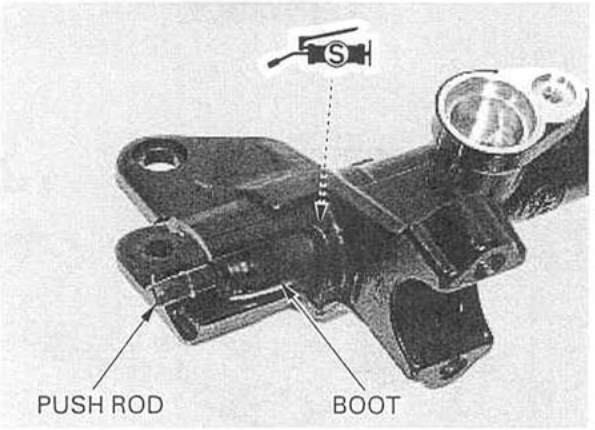

Apply silicone grease to the push rod hole in the clutch lever joint piece.
Insert the push rod into the hole in the joint piece and install the clutch lever assembly onto the master cylinder.

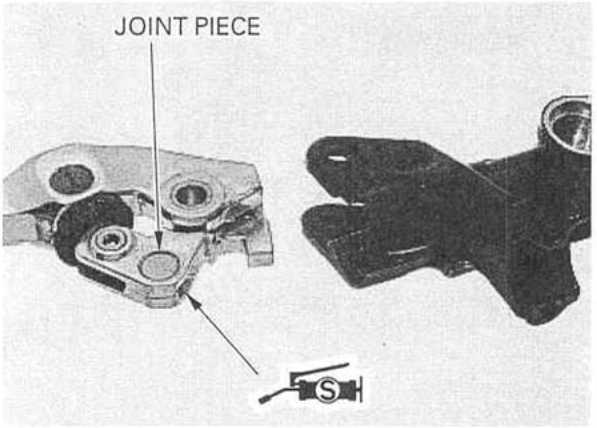

Apply silicone grease to the pivot bolt sliding surface, install and tighten the pivot bolt.

TORQUE: 1 N·m (0.1 kgf·m , 0.7 lbf·ft)

Install and tighten the pivot nut.

TORQUE: 6 N·m (0.6 kgf·m , 4.3 lbf·ft)

Install the clutch switch with the screw.

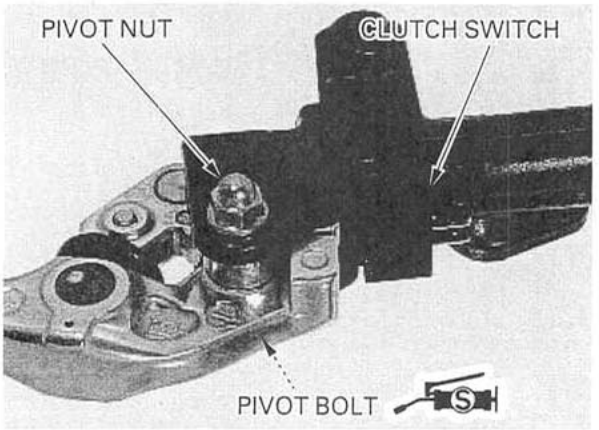

Coat new O-rings with clutch fluid and install them onto the master cylinder.

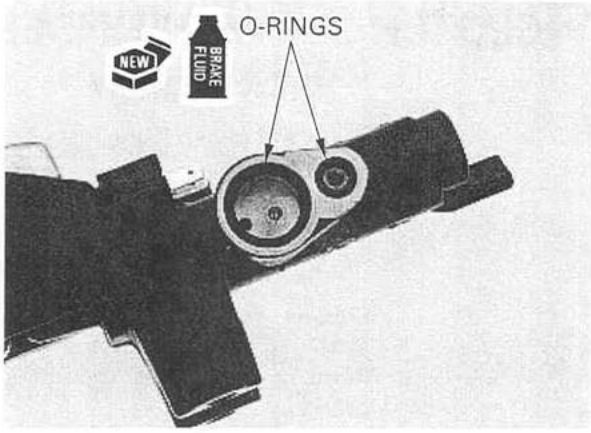

Apply locking agent to the reservoir mounting screw threads.
Install the reservoir and tighten the mounting screw.

TORQUE: 2 N·m (0.2 kgf·m , 1.4 lbf·ft)

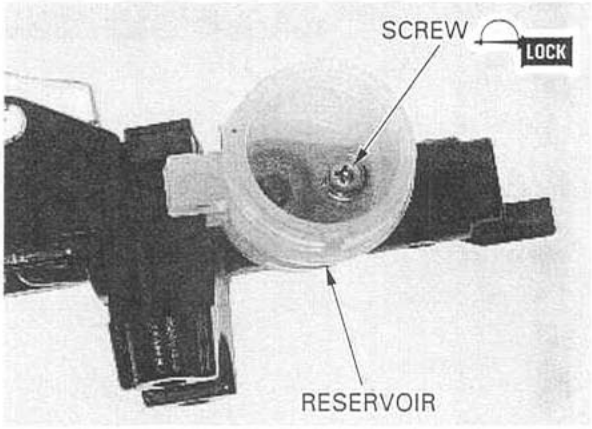

Install the master cylinder and holder with the "UP" mark facing up.
Align the end of the master cylinder with the punch mark on the handlebar, and tighten the upper bolt first, then tighten the lower bolt.

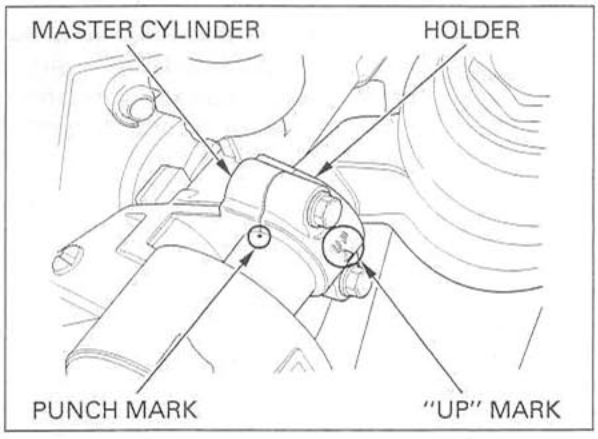

Connect the clutch hose to the master cylinder with the oil bolt and new sealing washers.
Rest the hose joint against the stopper and tighten the oil bolt.

TORQUE: 34 N·m (3.5 kgf·m , 25 lbf·ft)

Connect the clutch switch connectors.

Fill and bleed the clutch hydraulic system (page 9-4).

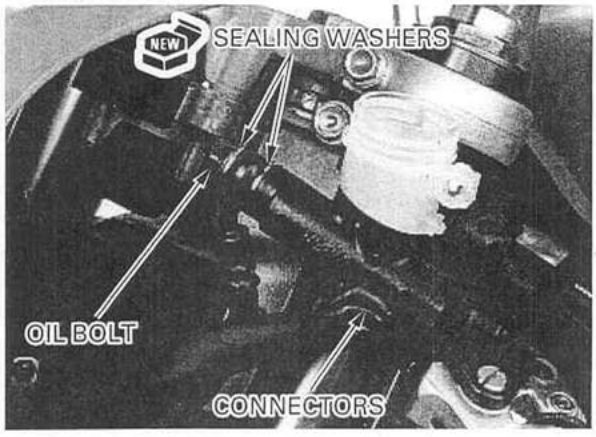

CLUTCH SLAVE CYLINDER

DISASSEMBLY

Drain the clutch fluid from the hydraulic system (page 9-4).

Disconnect the clutch hose from the slave cylinder by removing the oil bolt and sealing washers.

Loosen the upper drive sprocket cover bolt attaching the choke knob stay.
Remove the three mounting bolts and slave cylinder.

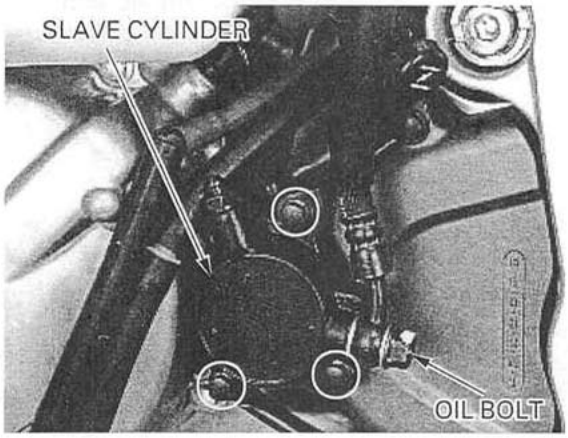

Remove the gasket and dowel pins.

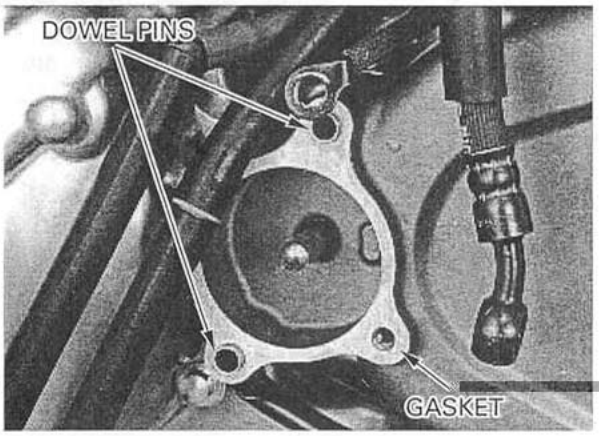

Do not use high pressure air or bring the nozzle too close to the inlet.

Remove the piston from the slave cylinder.
If piston removal is difficult, place a shop towel over the piston, position the cylinder body with the piston down and apply small squirts of air pressure to the fluid inlet.

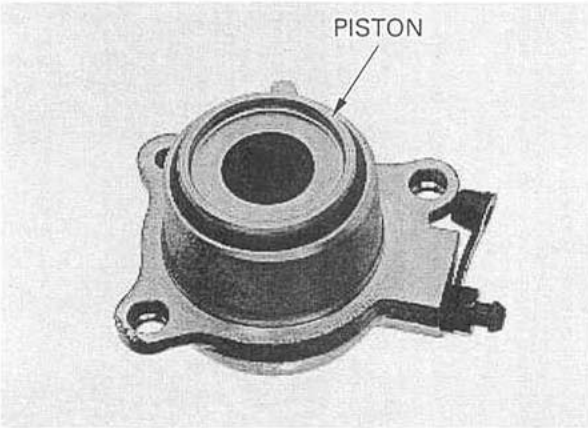

Remove the spring, piston seal and oil seal from the piston.

INSPECTION

Check the piston spring for fatigue or damage.
Check the slave cylinder and piston for scoring or damage.

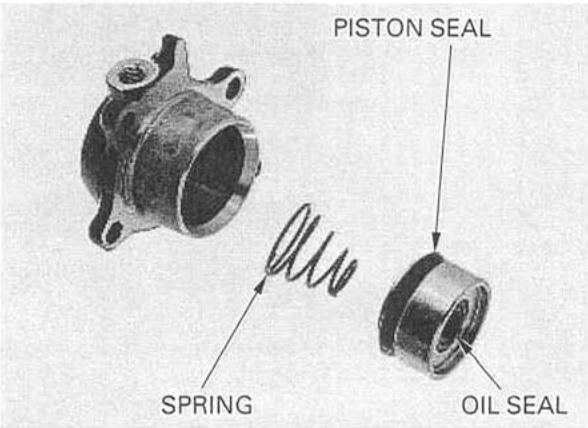

ASSEMBLY

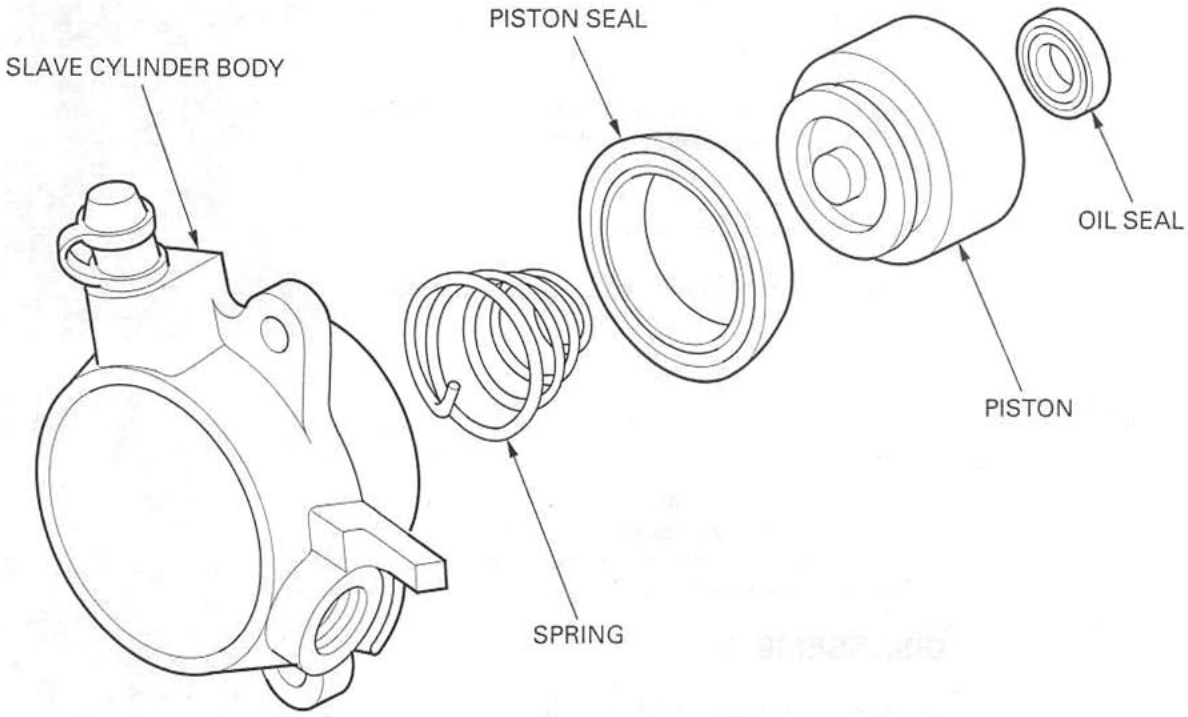

Apply a small amount of silicone grease to the lifter rod contacting area of the piston.
Apply grease to new oil seal lips and install the oil seal into the piston.
Install a new piston seal into the piston groove.
Install the piston spring onto the piston.

Coat the piston and piston seal with clutch fluid and install them into the slave cylinder.

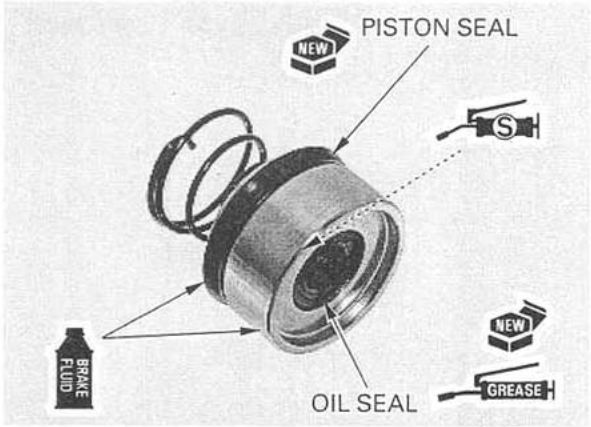

Install the dowel pins and a new gasket onto the drive sprocket cover.

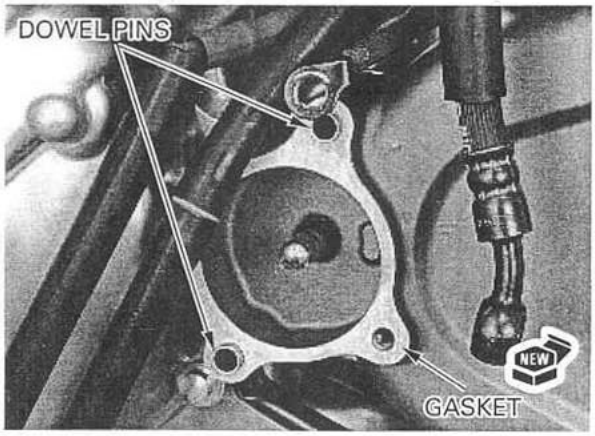

Remove the thrust washer.

Remove the right crankcase cover (page 6-13).

When the oil pump driven sprocket will be removed, loosen the driven sprocket bolt with the clutch outer still installed.

Align the gear teeth of the scissors gears (primary drive gear and sub-gear) by inserting a screwdriver into the gear holes, and remove the clutch outer.

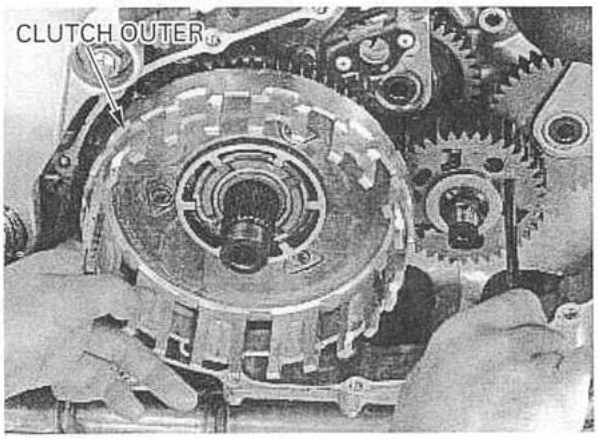

Remove the oil pump driven sprocket bolt and washer.
Remove the oil pump driven sprocket, drive chain and drive sprocket as a set.
Remove the clutch outer guide.

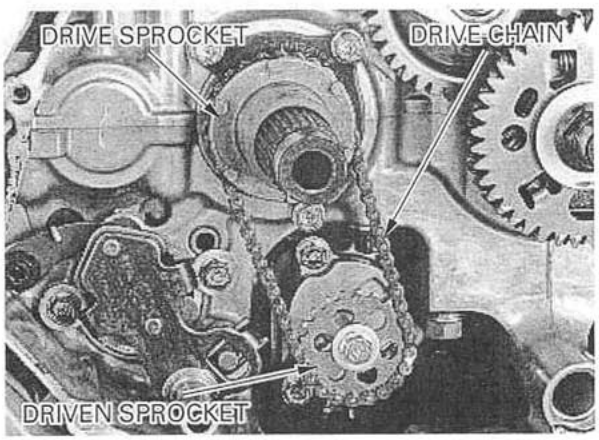

INSPECTION

LIFTER BEARING

Turn the inner race of the lifter bearing with your finger.
The bearing should turn smoothly and quietly.
Also check that the outer race of the bearing fits tightly in the pressure plate.
Replace the bearing if the inner race does not turn smoothly, quietly, or if the outer race fits loosely in the pressure plate.

Drive the bearing out of the pressure plate.

Drive a new bearing into the plate with its mark side facing out.

TOOLS:

Driver	07749-0010000
Attachment, 32 × 35 mm	07746-0010100
Pilot, 17 mm	07746-0040400

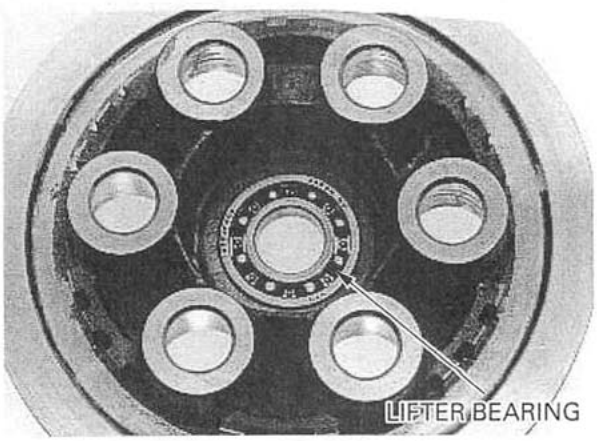

CLUTCH SPRING

Replace the clutch springs as a set

Measure the clutch spring free length.

SERVICE LIMIT: 57.9 mm (2.28 in)

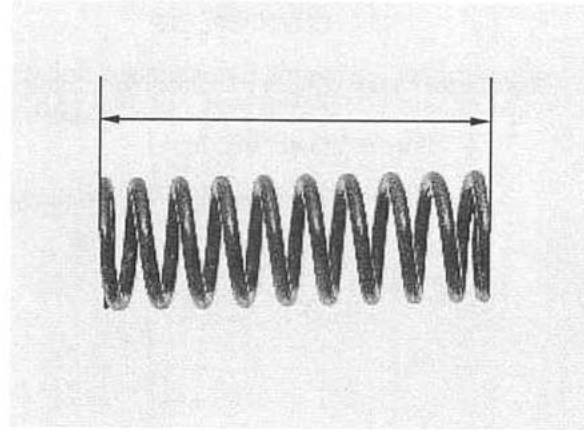

CLUTCH CENTER

Check the clutch center and pressure plate for nicks, indentations or abnormal wear made by the plates.

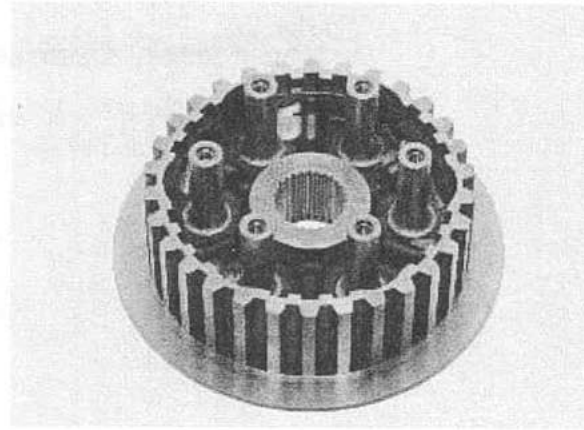

CLUTCH LIFTER ROD

Check the clutch lifter rod for bends or damage.

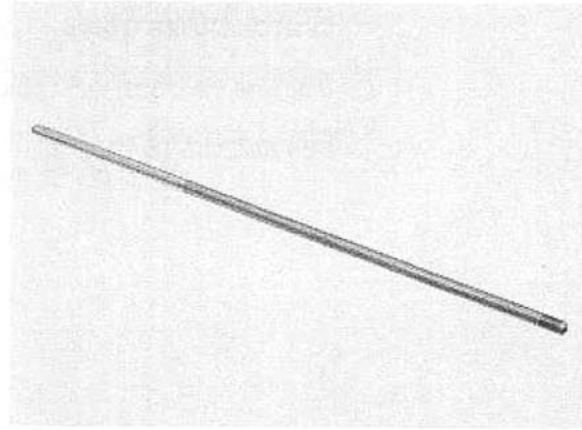

CLUTCH DISC

Replace the clutch discs and plates as a set.

Check the clutch discs for signs of scoring or discoloration.
Measure the clutch disc thickness.

SERVICE LIMIT: 3.5 mm (0.14 in)

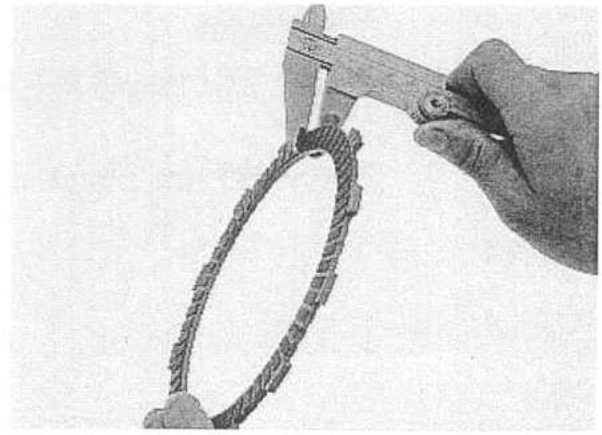

CLUTCH PLATE

Replace the clutch discs and plates as a set.

Check the plates for discoloration.
Check the plate warpage on a surface plate using a feeler gauge.

SERVICE LIMIT: 0.30 mm (0.012 in)

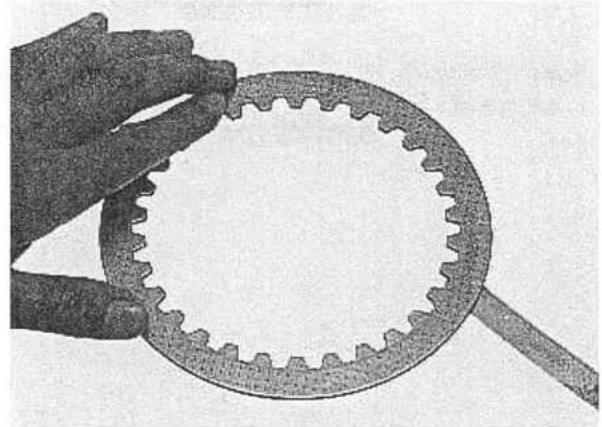

After '01:
JUDDER SPRING, SPRING SEAT

Check the spring seat and judder spring for distortion, wear or damage.

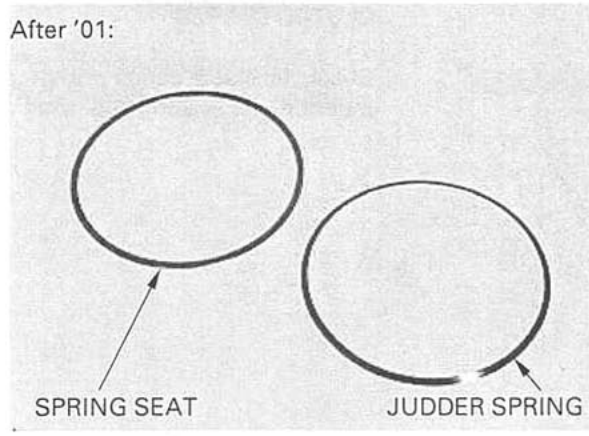

CLUTCH OUTER GUIDE

Measure the clutch outer guide I.D. and O.D.

SERVICE LIMITS:I.D. : 28.031 mm (1.1036 in)
O.D. : 34.987 mm (1.3774 in)

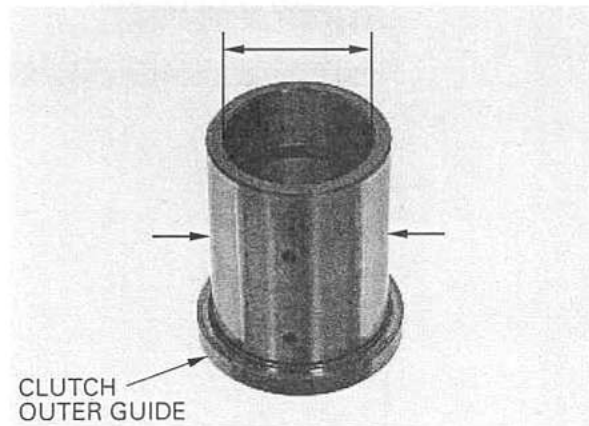

MAINSHAFT

Measure the mainshaft O.D. at the clutch outer guide.

SERVICE LIMIT: 27.970 mm (1.1012 in)

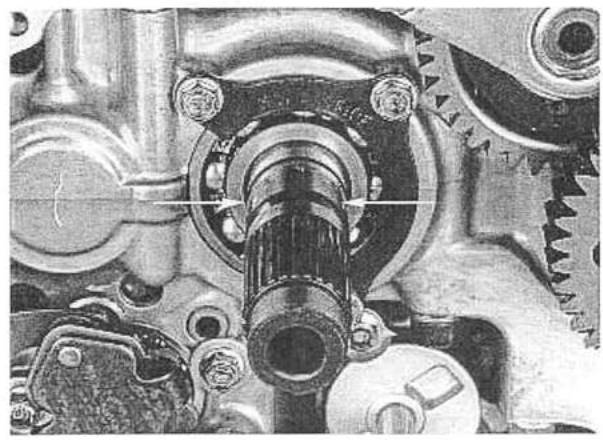

Install the clutch center and special washer.

Be sure the clutch outer is fully seated on the oil pump driven sprocket.

Apply oil to the threads and seating surface of a new clutch center lock nut and install it onto the mainshaft.
Hold the clutch center with the special tool and tighten the lock nut.

TOOL:

Clutch center holder	07724-0050002 or equivalent commercially available in U.S.A.

TORQUE: 127 N·m (13.0 kgf·m , 94 lbf·ft)

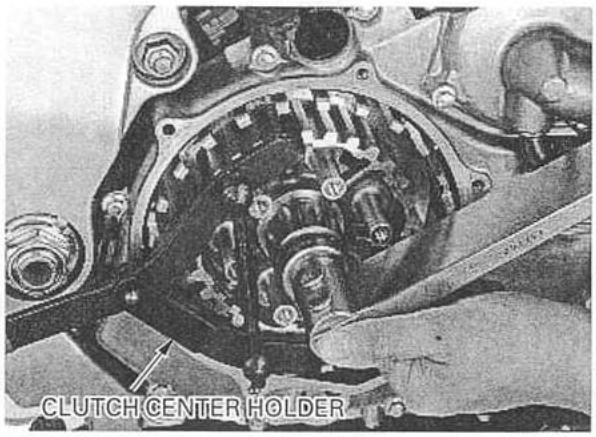

Be careful not to damage the mainshaft threads.

Stake the clutch center lock nut into the mainshaft groove.

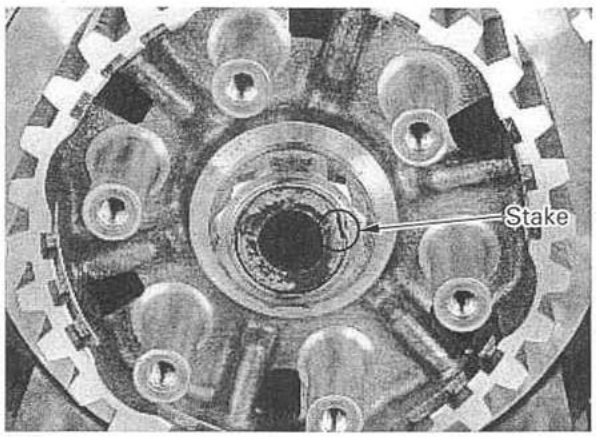

Install the tabs of outside clutch disc A into the shallow slots of the clutch outer.

'00–'01:
Coat the clutch discs with clean engine oil.
Install the seven clutch discs and six plates alternately, starting with disc A. (Two clutch disc As are installed onto each ends)
Disc A has dark specks on pads and green paint on one tab.

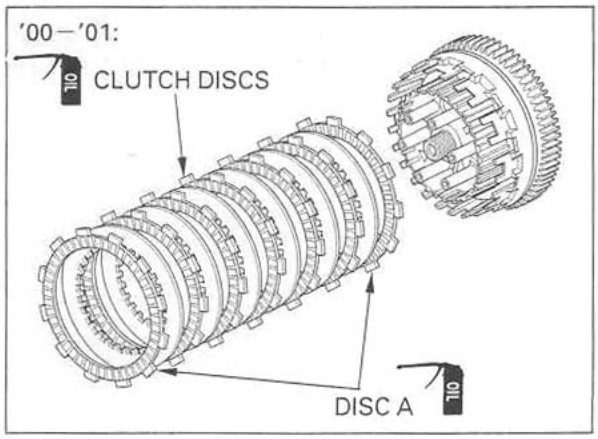

Install the tabs of outside clutch disc B into the shallow slots of the clutch outer.

After '01:
Coat the clutch discs with clean engine oil.
Install the spring seat and judder spring.
Install the seven clutch discs and six plates alternately, starting with disc A. (Disc A and disc B are installed onto each end.)

NOTE:
- Clutch disc A has a larger I. D. than the other discs.
- Clutch disc B has dark specks on the pads and green paint on one tab.

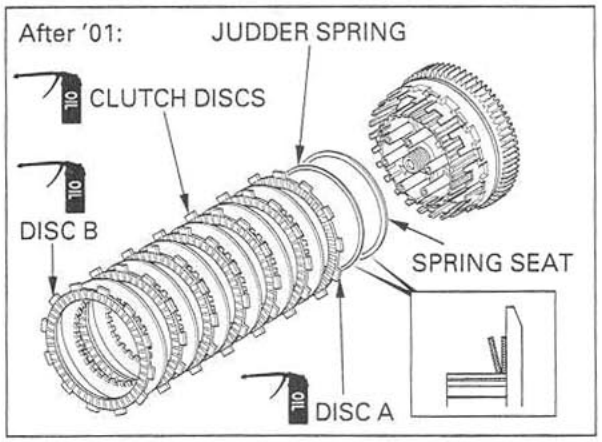

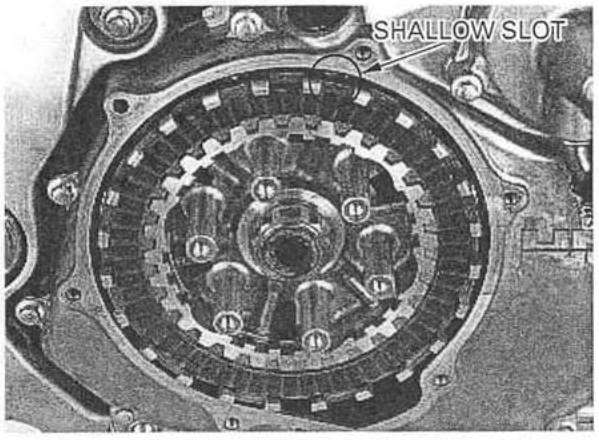

Note the clutch lifter rod installation direction and install it into the mainshaft.

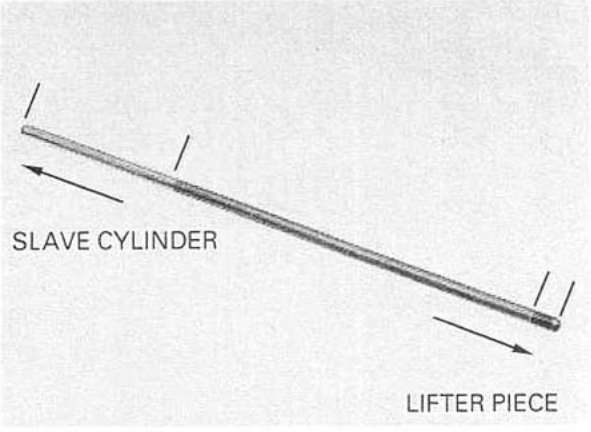

Coat the clutch lifter piece with molybdenum oil solution and install it into the mainshaft.

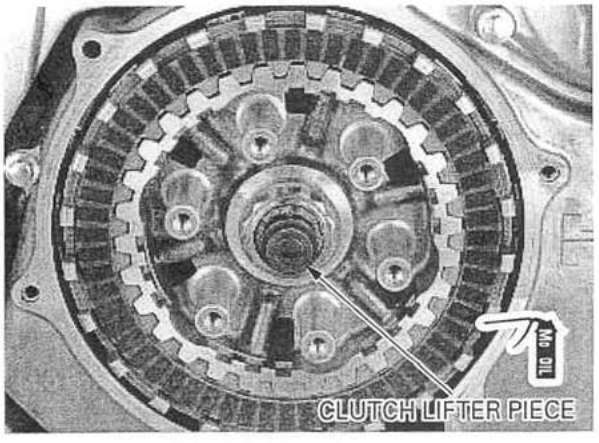

Remove the gearshift cam bolt and gearshift cam.
Remove the stopper arm bolt, arm, washer and return spring.
Remove the dowel pin from the shift drum.

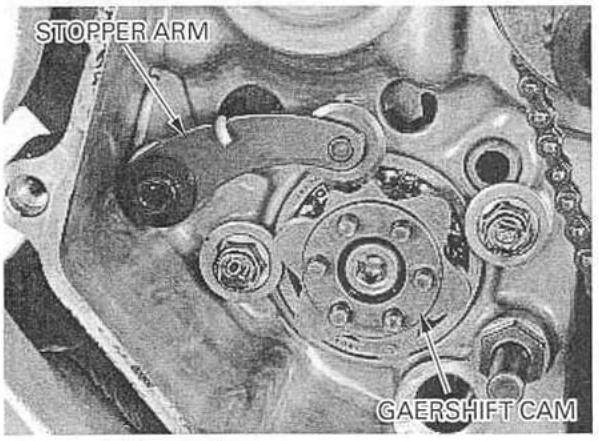

INSPECTION

Check the gearshift spindle for bends.
Check the spindle plate for wear or damage.
Check the spindle return spring for fatigue or damage.

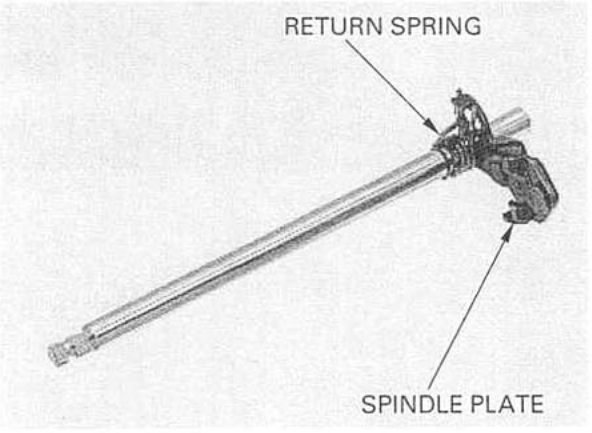

INSTALLATION

Install the dowel pin into the shift drum.
Install the return spring, washer, stopper arm and pivot bolt, and tighten the bolt.

TORQUE: 12 N·m (1.2 kgf·m , 9 lbf·ft)

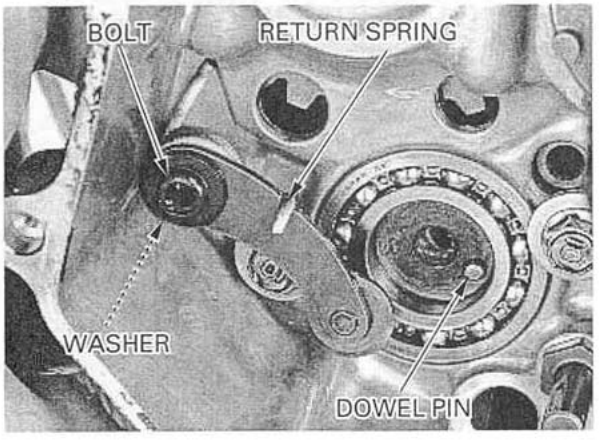

Lift the stopper arm with a screwdriver and install the gearshift cam by aligning the pin groove in the cam with the dowel pin.

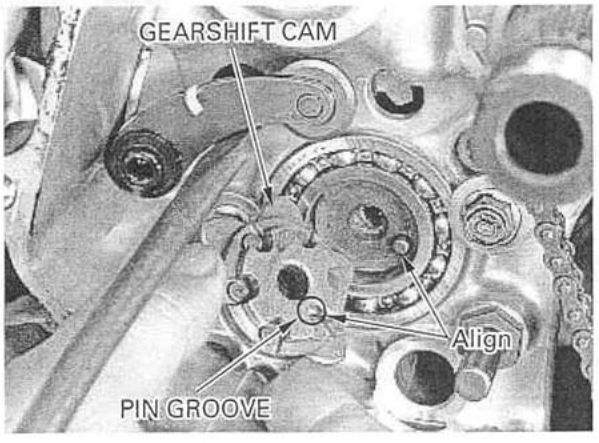

Apply locking agent to the gearshift cam bolt threads.
Install and tighten the bolt.

TORQUE: 23 N·m (2.3 kgf·m , 17 lbf·ft)

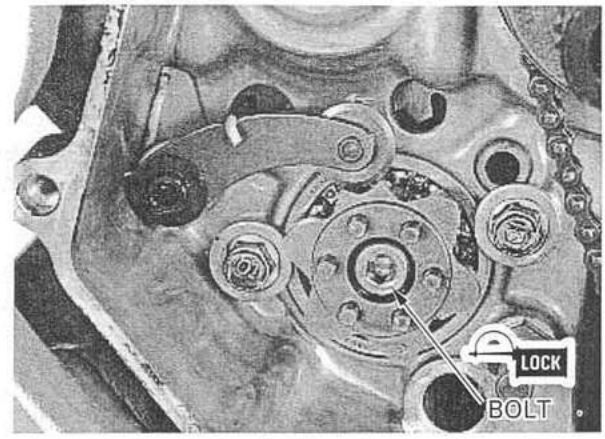

Install the thrust washer onto the gearshift spindle, and insert the spindle into the crankcase, aligning the return spring ends with the spring pin.

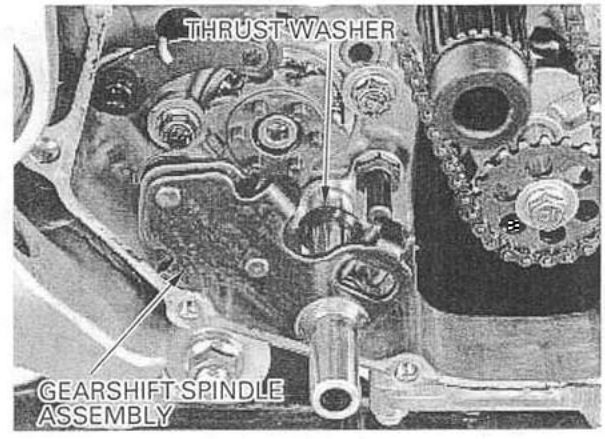

Install the gearshift arm onto the spindle, aligning the slit of the arm with the punch mark on the spindle.
Tighten the gearshift arm bolt securely.

Assemble the clutch (page 9-17).
Install the right crankcase cover (page 6-15).

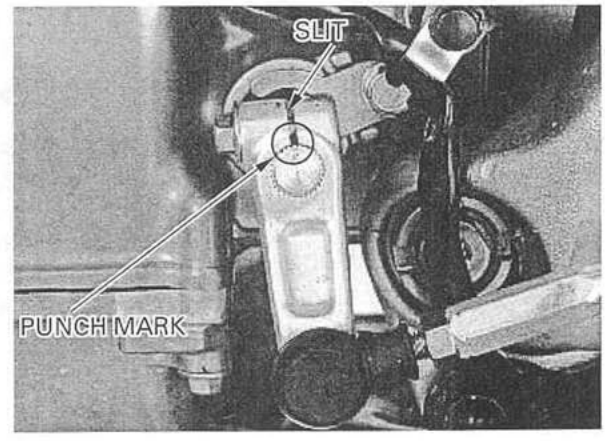

PRIMARY DRIVE GEAR

REMOVAL

Remove the right crankcase cover (page 6-13).
Disassemble the clutch to the clutch center thrust washer (page 9-12).

The primary drive gear bolt has left hand threads. Be careful not to damage the sealing surface of the primary drive gear bolt.

Install the special tool between the primary drive and driven gears as shown, loosen the primary drive gear bolt.

TOOL:
Gear holder, 2.5 07724-0010100 or
07724-001A100 (U.S.A. only)

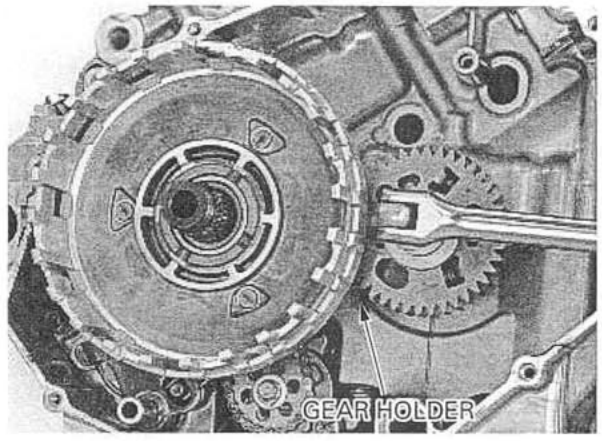

Remove the clutch outer (page 9-14).

Remove the bolt, special washer and primary drive gear assembly.

To remove the timing gear, remove the front and rear cylinder cam gear train assemblies (page 8-13).

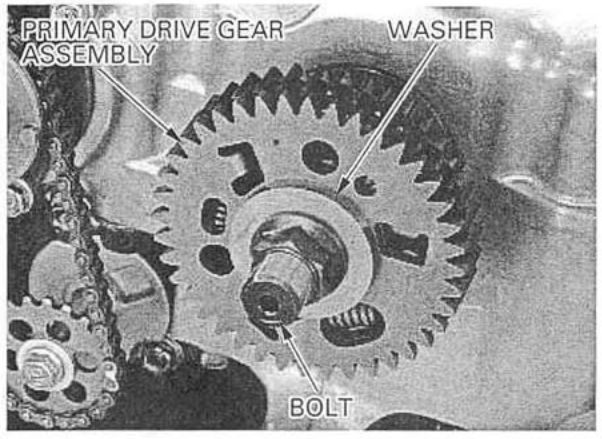

INSTALLATION

Install the damper springs into the primary drive gear grooves.
Install the friction spring onto the primary drive gear with the concaved side facing the sub-gear.
Apply molybdenum oil solution to the primary drive gear and sub-gear sliding surfaces.
Install the sub-gear onto the primary drive gear boss so the sub-gear tabs are positioned against the damper springs and the holes in the gears are aligned as shown.

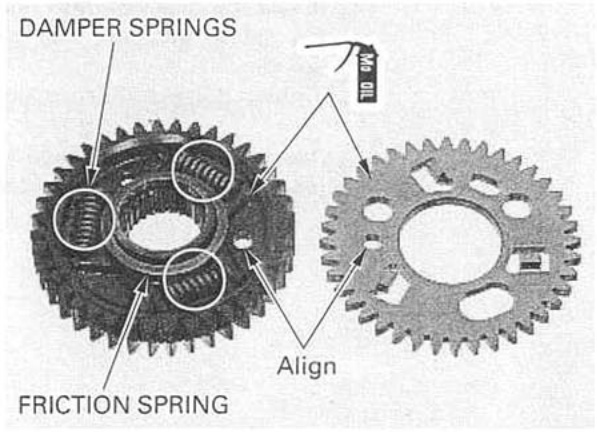

Install the timing gear onto the crankshaft, aligning the wide groove with the wide tooth.

Install the primary drive gear assembly, aligning the wide grooves with the wide tooth.

Apply oil to the threads and seating surface of the primary drive gear bolt.

The primary drive gear bolt has left hand threads.

Install the special washer and primary drive gear bolt, being careful not to damage the sealing surface of the primary drive gear bolt.

Install the clutch outer (page 9-17).

Install the special tool between the primary drive and driven gears as shown and tighten the primary drive gear bolt.

TOOL:
Gear holder, 2.5 07724-0010100 or
07724-001A100 (U.S.A. only)

TORQUE: 88 N·m (9.0 kgf·m , 65 lbf·ft)

Install the front and rear cylinder cam gear train assemblies if they were removed (page 8-14).

Assemble the clutch (page 9-17).

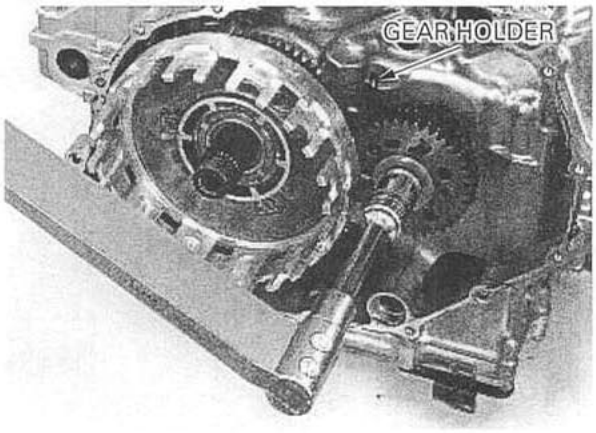

10. ALTERNATOR/STARTER CLUTCH

SERVICE INFORMATION

GENERAL

- This section covers service of the alternator stator, flywheel, starter clutch and starter gears. These parts can be removed with the engine installed in the frame.
- Refer to section 16 for alternator stator inspection.
- Refer to section 18 for starter motor servicing.

SPECIFICATIONS

Unit: mm (in)

ITEM	STANDARD	SERVICE LIMIT
Starter driven gear boss O.D.	57.749 – 57.768 (2.2736 – 2.2743)	57.639 (2.2692)
Torque limiter slip torque	53 – 84 N·m (5.4 – 8.6 kgf·m , 39 – 62 lbf·ft)	———

10

TORQUE VALUES

Flywheel bolt	157 N·m (16.0 kgf·m , 116 lbf·ft)	Apply oil to the threads and seating surface.
Starter clutch bolt	23 N·m (2.3 kgf·m , 17 lbf·ft)	Apply locking agent to the threads.
Alternator stator bolt	12 N·m (1.2 kgf·m , 9 lbf·ft)	

TOOLS

Flywheel holder	07725-0040000	or equivalent commercially available in U.S.A.
Rotor puller	07733-0020001	or 07933-3290001 (U.S.A. only)
Bearing remover shaft	07936-GE00100	or equivalent commercially available in U.S.A.
Bearing remover head, 10 mm	07936-GE00200	
Remover weight	07741-0010201	or 07936-371020A or 07936-3710200 (U.S.A. only)
Driver	07749-0010000	
Attachment, 24 × 26 mm	07746-0010700	
Pilot, 10 mm	07746-0040100	
Torque limiter inspection tool A	07YMJ-MCF0100	not available in U.S.A.
Torque limiter inspection tool B	07YMJ-MCF0200	

TROUBLESHOOTING

Engine does not turn
- Faulty starter clutch
- Damaged torque limiter/starter reduction gear
- Damaged starter idle gear

ALTERNATOR STATOR

LEFT CRANKCASE COVER REMOVAL

Drain the engine oil (page 3-15).

Remove the following:
- lower inner fairing (page 2-3)
- left lower fairing (page 2-4)
- seat cowl (page 2-2)

Disconnect the ignition pulse generator 2P connector.

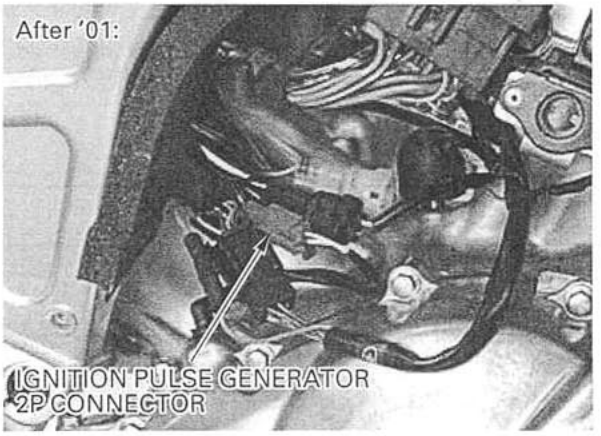

Disconnect the alternator 3P connector.

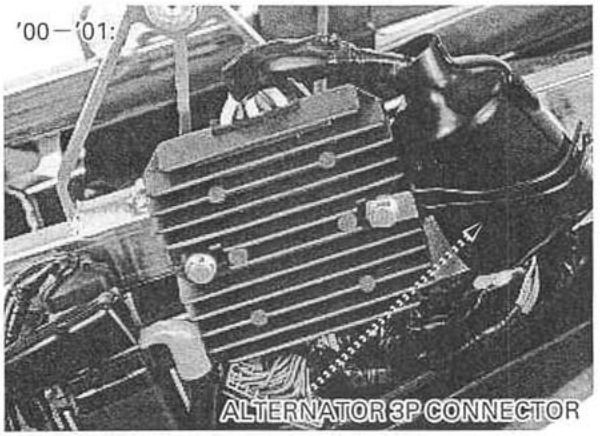

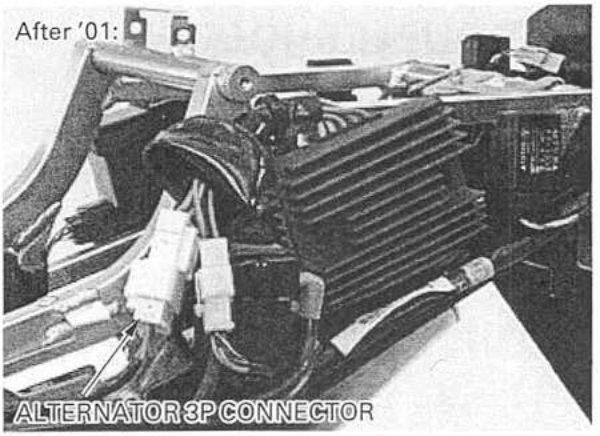

Remove the eleven bolts and the left crankcase cover.

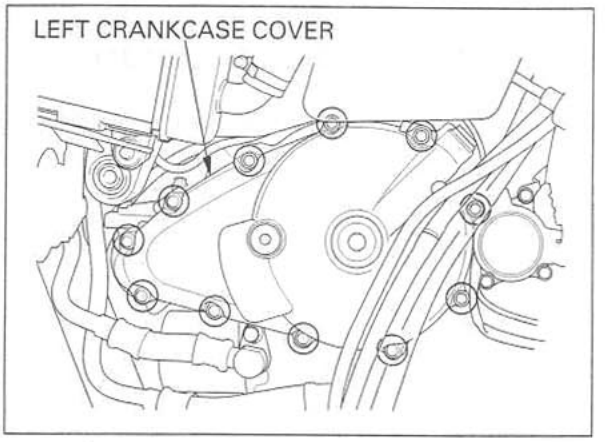

Remove the dowel pins and gasket.

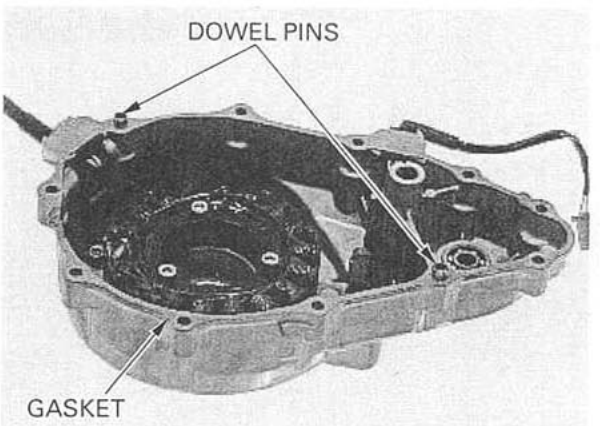

STATOR REPLACEMENT

Remove the four bolts, wire clamp, grommet and stator from the left crankcase cover.

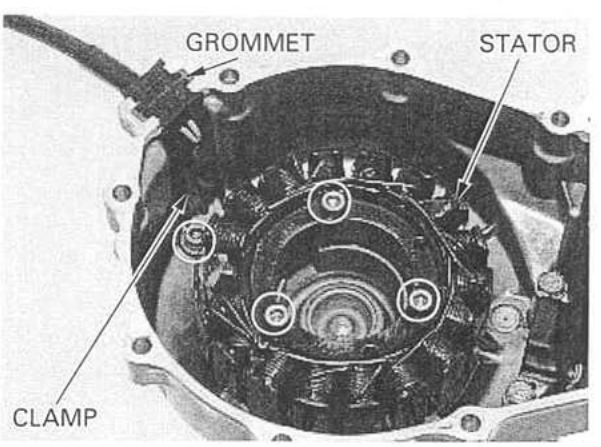

Install a new stator onto the left crankcase cover.
Apply sealant to the grommet seating surface and install it into the cover groove properly.
Install the wire clamp properly as shown.
Tighten the four bolts.

TORQUE: 12 N·m (1.2 kgf·m , 9 lbf·ft)

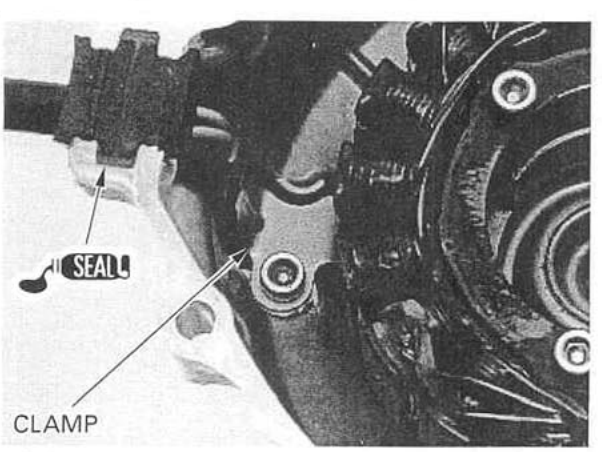

LEFT CRANKCASE COVER INSTALLATION

Apply sealant to the crankcase mating surfaces as shown.

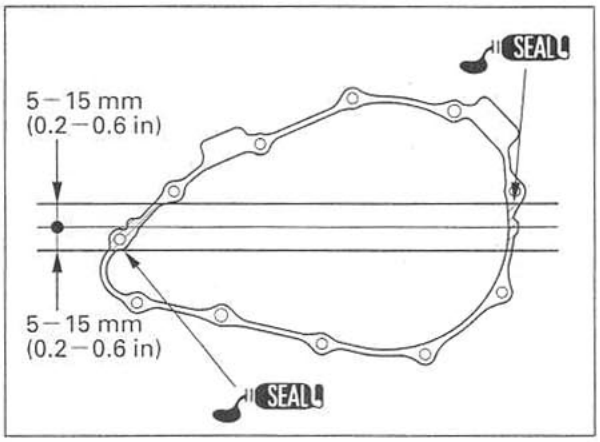

Install the dowel pins and a new gasket.

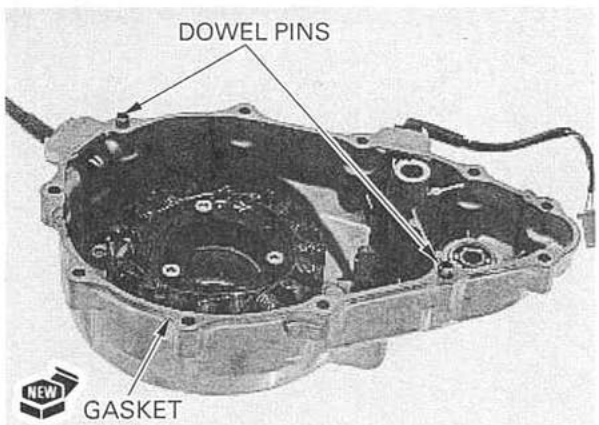

Install the left crankcase cover and tighten the 11 bolts securely.

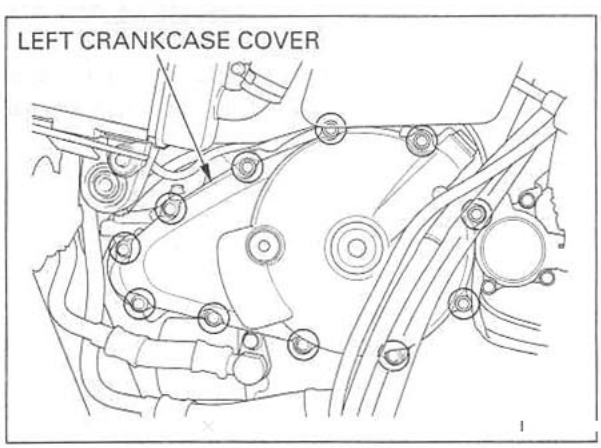

Route the alternator wire and ignition pulse generator wire properly (page 1-25).

Connect the alternator 3P connector.

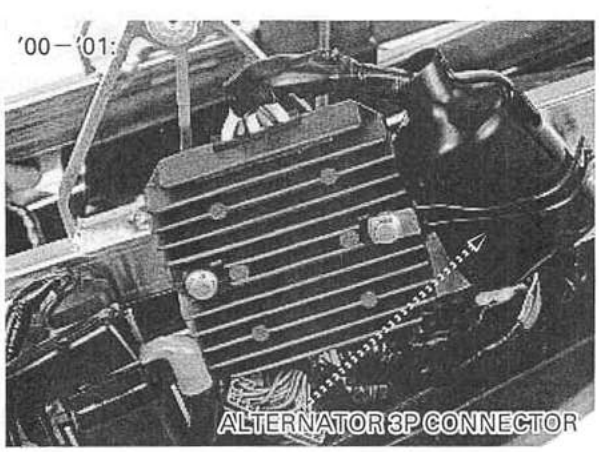

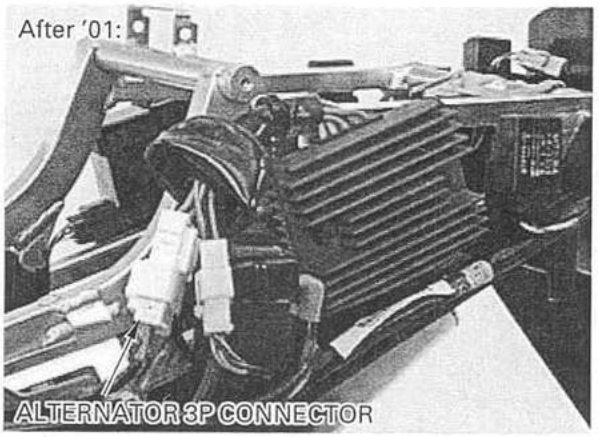

Connect the ignition pulse generator 2P connector.

Install the following:
- left lower fairing (page 2-4)
- lower inner fairing (page 2-3)
- seat cowl (page 2-2)

Check the oil level and add the recommended engine oil if necessary (page 3-15).

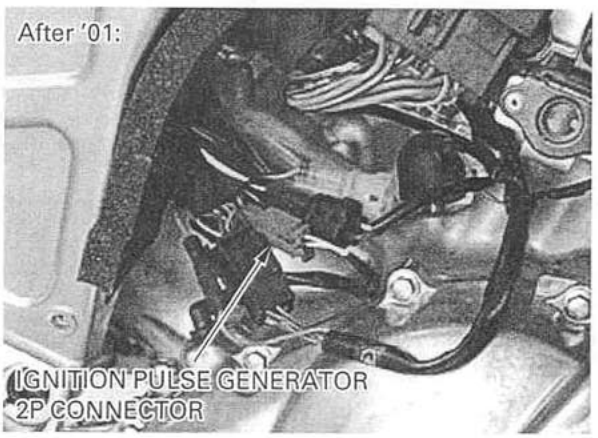

FLYWHEEL REMOVAL

Remove the left crankcase cover (page 10-2).

Hold the flywheel with the special tool and loosen the flywheel bolt.

TOOL:

Flywheel holder	07725-0040000 or equivalent commercially available in U.S.A.

Remove the flywheel bolt and special washer.

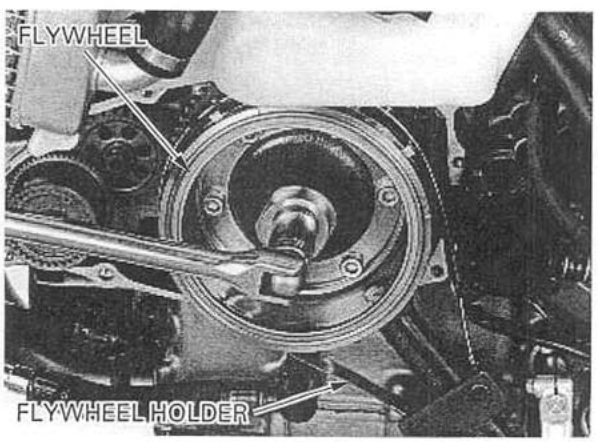

Remove the flywheel using the special tool.

TOOL:

Rotor puller	07733-0020001 or 07933-3290001 (U.S.A. only)

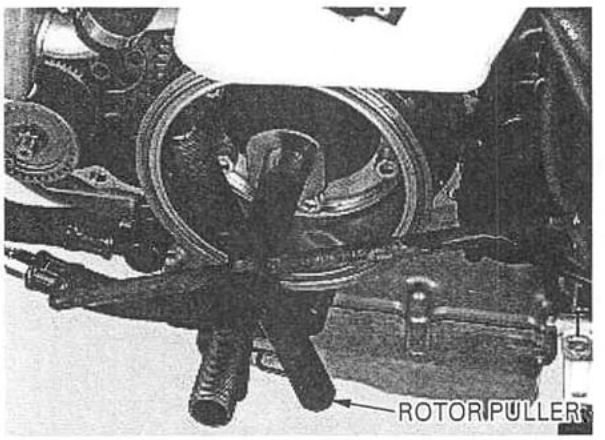

Remove the woodruff key from the crankshaft.

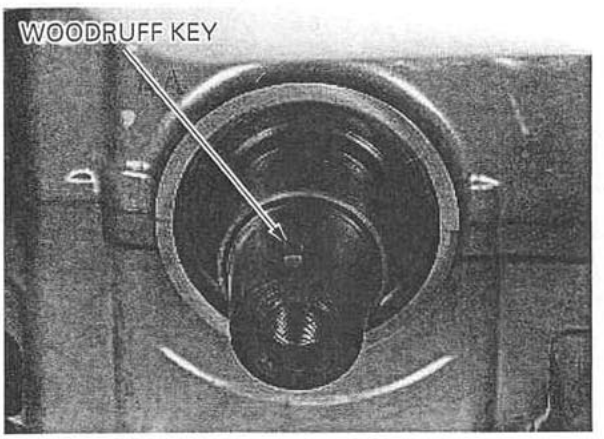

STARTER CLUTCH

REMOVAL

Remove the flywheel (page 10-5).

Remove the starter driven gear while turning it counterclockwise.

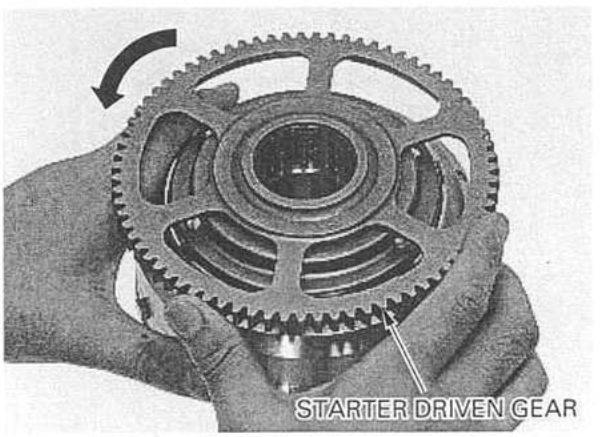

Hold the flywheel with the special tool and remove the starter clutch bolts.

TOOL:

Flywheel holder	07725-0040000 or equivalent commercially available in U.S.A.

Remove the starter clutch assembly from the flywheel.

Remove the sprag clutch from the starter clutch outer.

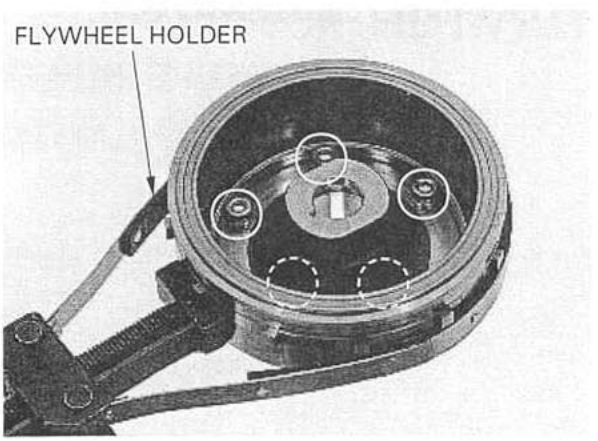

INSPECTION

Check the starter driven gear, sprag clutch and clutch outer for abnormal wear or damage.

Measure the starter driven gear O.D.

SERVICE LIMIT: 57.639 mm (2.2692 in)

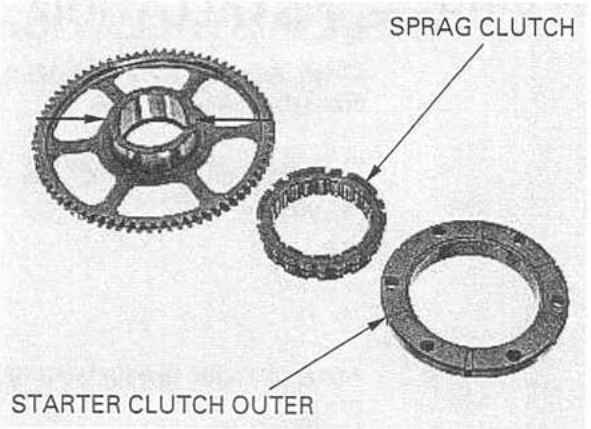

INSTALLATION

Install the sprag clutch into the starter clutch outer with the flanged side toward the flywheel.

Install the starter clutch onto the flywheel.

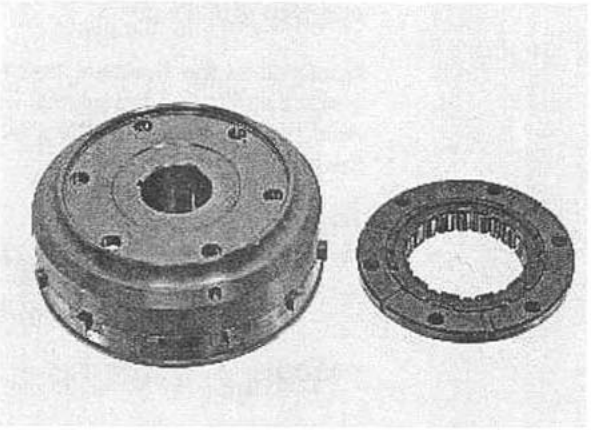

Apply locking agent to the starter clutch bolt threads and install the bolts.
Hold the flywheel with the special tool and tighten the bolts.

TOOL:
Flywheel holder 07725-0040000 or equivalent commercially available in U.S.A.

TORQUE: 23 N·m (2.3 kgf·m , 17 lbf·ft)

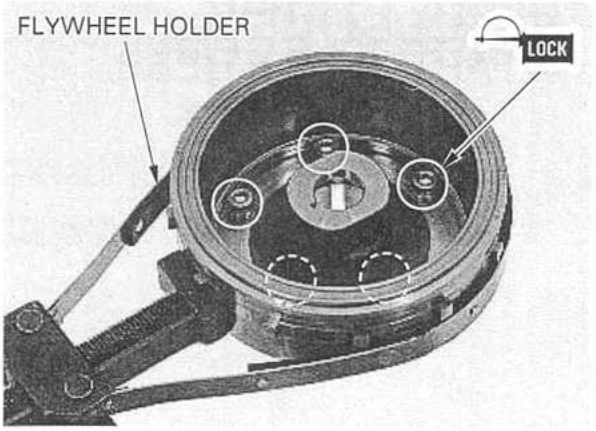

Install the starter driven gear while turning it counterclockwise.

Make sure the starter driven gear turns counterclockwise smoothly and does not turn clockwise.

Install the flywheel (page 10-8).

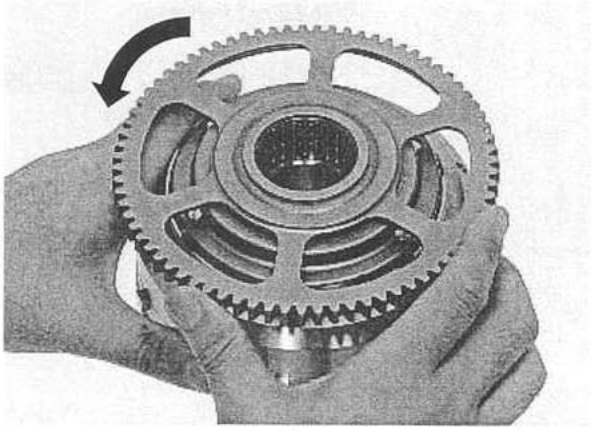

FLYWHEEL INSTALLATION

Clean any oil from the tapered portion of the crankshaft and flywheel.

Install the woodruff key in the crankshaft key groove.

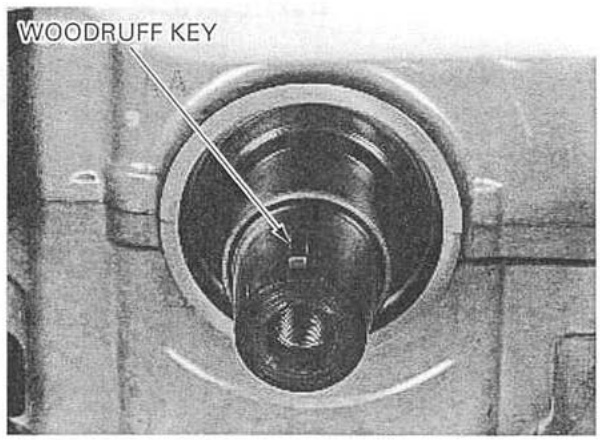

Apply oil to the needle bearing in the starter driven gear.
Install the flywheel on the crankshaft, aligning the key way with the woodruff key, and mesh the starter driven and idle gears.

Apply oil to the flywheel bolt threads and seating surface and install the special washer and bolt.
Hold the flywheel with the special tool and tighten the bolt.

TOOL:

Flywheel holder	07725-0040000 or equivalent commercially available in U.S.A.

TORQUE: 157 N·m (16.0 kgf·m , 116 lbf·ft)

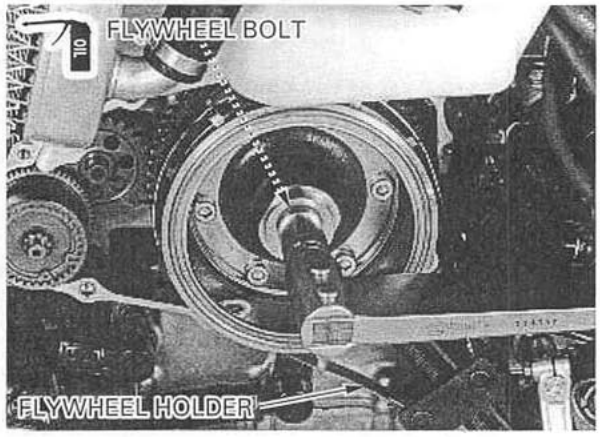

Install the left crankcase cover (page 10-4).

TORQUE LIMITER/ STARTER IDLE GEAR

REMOVAL

Remove the left crankcase cover (page 10-2).

Remove the torque limiter, starter idle gear and shaft.

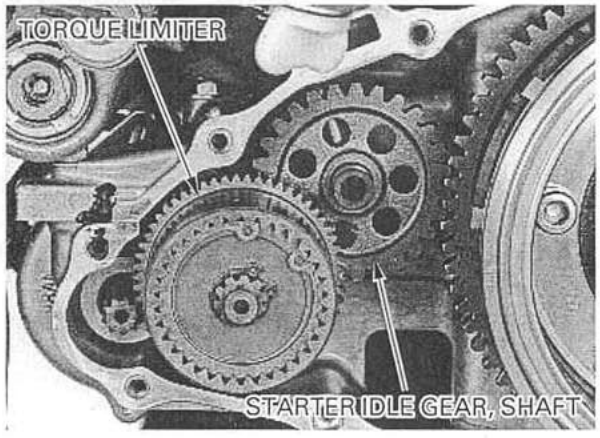

INSPECTION

Check the torque limiter, starter idle gear and shaft for wear or damage.

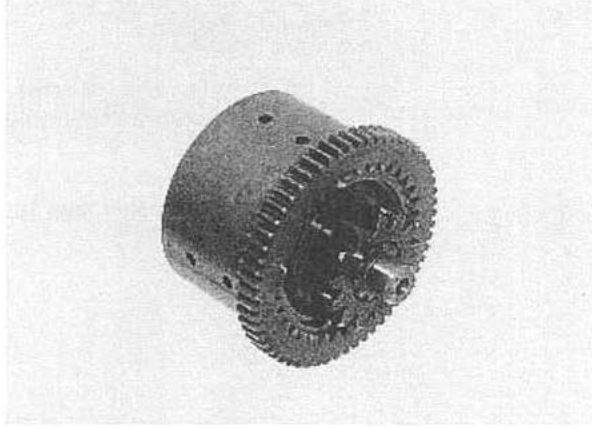

Hold the torque limiter in a vise with the special tool.

TOOL:
Torque limiter inspection tool B 07YMJ-MCF0100 (not available in U.S.A.)

Check the torque limiter slip torque using the special tool and a torque wrench.

TOOL:
Torque limiter inspection tool A 07YMJ-MCF0200 (not available in U.S.A.)

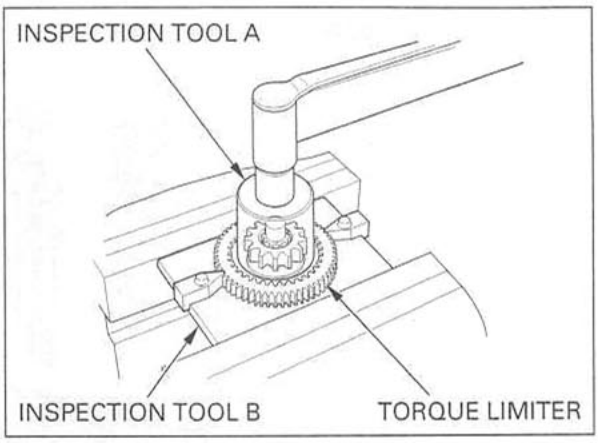

SLIP TORQUE:
53 – 84 N·m (5.4 – 8.6 kgf·m , 39 – 62 lbf·ft)

Replace the torque limiter assembly if the slip torque is out of specification.

Turn the inner race of the torque limiter bearing with your finger.
The bearing should turn smoothly and quietly.
Also check that the outer race of the bearing fits tightly in the left crankcase or cover.
Replace the bearing if the inner race does not turn smoothly, quietly, or if the outer race fits loosely in the left crankcase or cover.

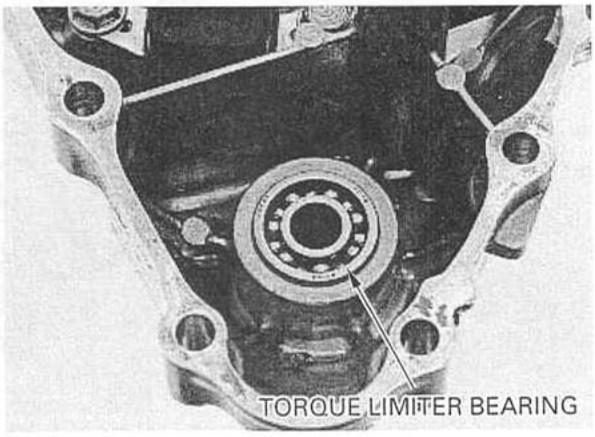

Remove the bearing with the special tools.

TOOLS:

Bearing remover shaft	07936-GE00100
Bearing remover head, 10 mm	07936-GE00200
Bearing remover weight	07741-0010201 or 07936-371020A or 07936-3710200 (U.S.A. only)

or equivalent commercially available in U.S.A.

Drive a new bearing in the left crankcase cover with the special tools.

TOOLS:

Driver	07749-0010000
Attachment, 24 × 26 mm	07746-0010700
Pilot, 10 mm	07746-0040100

INSTALLATION

Coat the starter idle gear shaft with oil.
Install the starter idle gear and shaft.
Coat the torque limiter with oil and install it.

Install the left crankcase cover (page 10-4).

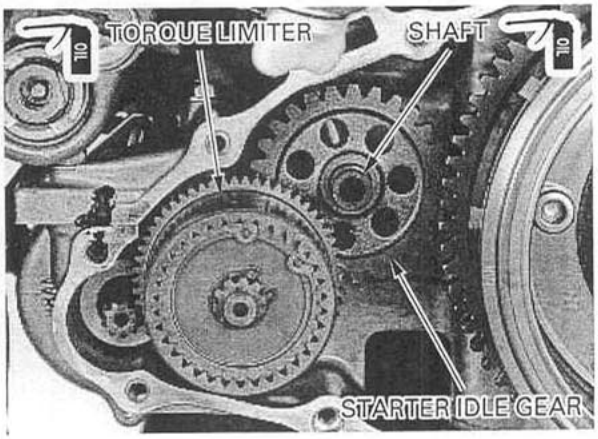

11. CRANKCASE/TRANSMISSION

SERVICE INFORMATION

GENERAL

- The crankcase must be separated to service the following:
  - transmission
  - crankshaft (section 12)
  - piston/connecting rod (section 12)
- Be careful not to damage the crankcase mating surfaces when servicing.
- Prior to assembling the crankcase halves, apply sealant to their mating surfaces. Wipe off any excess sealant thoroughly.

SPECIFICATIONS

Unit: mm (in)

ITEM			STANDARD	SERVICE LIMIT
Shift fork	I.D.	Left, Right	12.000 – 12.021 (0.4724 – 0.4733)	12.03 (0.474)
		Center	12.000 – 12.018 (0.4724 – 0.4731)	12.03 (0.474)
	Claw thickness		5.93 – 6.00 (0.233 – 0.236)	5.9 (0.23)
Shift fork shaft	O.D.		11.957 – 11.968 (0.4707 – 0.4712)	11.95 (0.470)
Transmission	Gear I.D.	M5	31.000 – 31.025 (1.2205 – 1.2215)	31.05 (1.222)
		M6	31.000 – 31.016 (1.2205 – 1.2211)	31.04 (1.222)
		C2, C3, C4	33.000 – 33.025 (1.2992 – 1.3002)	33.05 (1.301)
	Gear bushing O.D.	M5, M6	30.955 – 30.980 (1.2187 – 1.2197)	30.93 (1.218)
		C2	32.955 – 32.980 (1.2974 – 1.2984)	32.93 (1.296)
		C3, C4	32.950 – 32.975 (1.2972 – 1.2982)	32.93 (1.296)
	Gear-to-bushing clearance	M5	0.020 – 0.070 (0.0008 – 0.0028)	0.11 (0.004)
		M6	0.020 – 0.061 (0.0008 – 0.0024)	0.10 (0.004)
		C2	0.020 – 0.070 (0.0008 – 0.0028)	0.11 (0.004)
		C3, C4	0.025 – 0.075 (0.0010 – 0.0030)	0.11 (0.004)
	Gear bushing I.D.	M5	27.985 – 28.006 (1.1018 – 1.1026)	28.02 (1.103)
		C2	29.985 – 30.006 (1.1805 – 1.1813)	30.02 (1.182)
	Mainshaft O.D.	at M5	27.967 – 27.980 (1.1011 – 1.1016)	27.94 (1.100)
	Countershaft O.D.	at C2	29.950 – 29.975 (1.1791 – 1.1801)	29.92 (1.178)
	Bushing-to-shaft clearance	M5	0.005 – 0.039 (0.0002 – 0.0015)	0.06 (0.002)
		C2	0.010 – 0.056 (0.0004 – 0.0022)	0.06 (0.002)

TORQUE VALUES

Crankcase 10 mm flange bolt	39 N·m (4.0 kgf·m , 29 lbf·ft)	Apply oil to the threads and seating surface.
Crankcase 10 mm special bolt (black)	52 N·m (5.3 kgf·m , 38 lbf·ft)	Apply oil to the threads and seating surface.
Crankcase 10 mm special bolt (gray)	20 N·m (2.0 kgf·m , 14 lbf·ft) + 120°	Apply oil to the threads and seating surface. Plastic region torque bolt; replace with a new one.
Shift drum bearing washer/bolt	12 N·m (1.2 kgf·m , 9 lbf·ft)	Apply locking agent to the threads.

TOOLS

Driver, 40 mm I.D.	07746-0030100
Attachment, 30 mm I.D.	07746-0030300

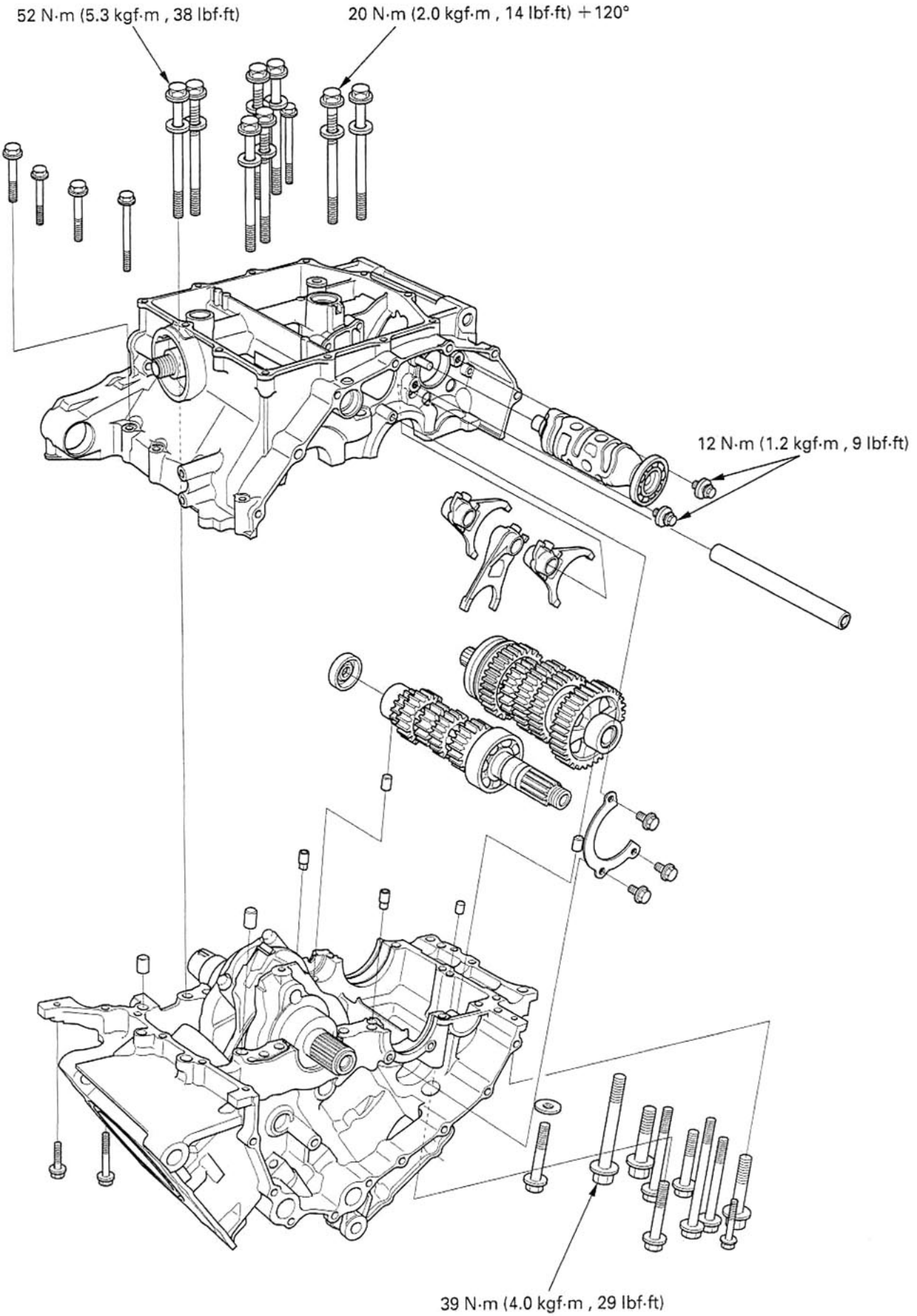
52 N·m (5.3 kgf·m , 38 lbf·ft)
20 N·m (2.0 kgf·m , 14 lbf·ft) + 120°
12 N·m (1.2 kgf·m , 9 lbf·ft)
39 N·m (4.0 kgf·m , 29 lbf·ft)

TROUBLESHOOTING

Hard to shift
- Improper clutch operation (section 9)
- Incorrect engine oil weight
- Bent shift forks
- Bent shift fork shaft
- Bent shift fork claw
- Damaged shift drum cam grooves
- Bent gearshift spindle

Transmission jumps out of gear
- Worn gear dogs
- Worn gear shifter groove
- Bent shift fork shaft
- Broken shift drum stopper arm
- Worn or bent shift forks
- Broken drum stopper arm spring
- Broken gearshift spindle return spring

Excessive engine noise
- Worn or damaged transmission gears
- Worn or damaged transmission bearings

SHIFT FORK/SHIFT DRUM

REMOVAL

Separate the crankcase halves (page 11-3).

Remove the two washers/bolts.
Remove the shift fork shaft, shift forks and shift drum.

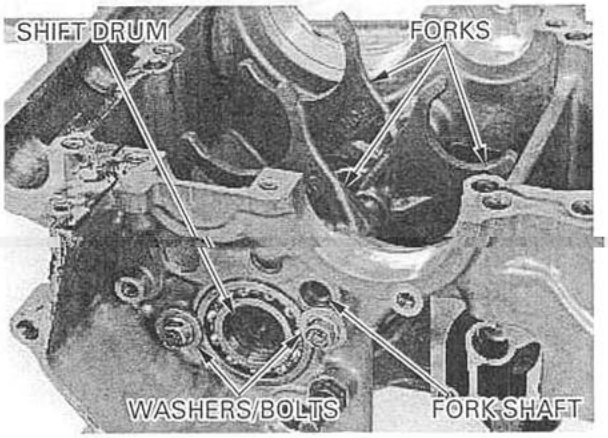

INSPECTION

Check the shift fork guide pins for abnormal wear or damage.

Measure the shift fork I.D.

SERVICE LIMIT: 12.03 mm (0.474 in)

Measure the shift fork claw thickness.

SERVICE LIMIT: 5.9 mm (0.23 in)

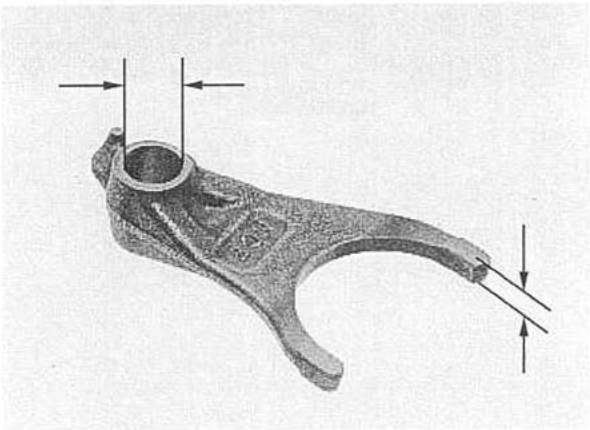

Measure the shift fork shaft O.D.

SERVICE LIMIT: 11.95 mm (0.470 in)

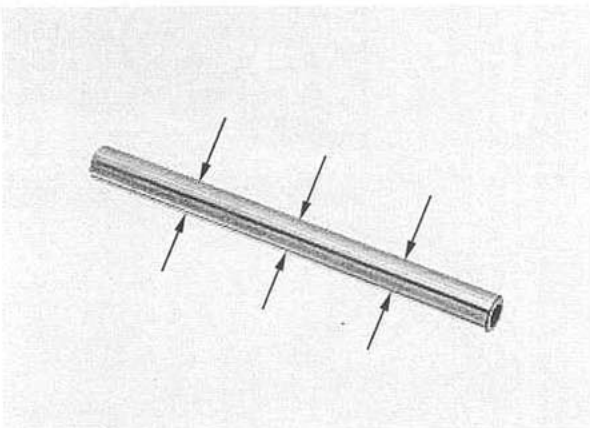

Check the shift drum guide groove for abnormal wear or damage.

Check the shift drum bearings for smooth rotation.

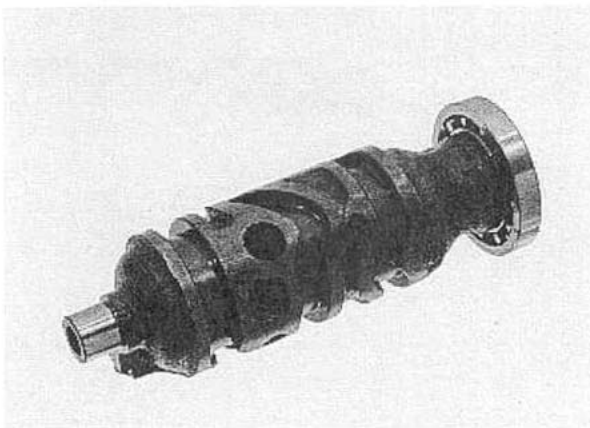

INSTALLATION

Install the shift drum.

Check the shift fork identification mark.
MCF: right and left shift forks
MBB C: center shift fork

Install the shift forks into the shift drum guide groove with the identification marks facing toward the right side of the engine and insert the fork shaft.

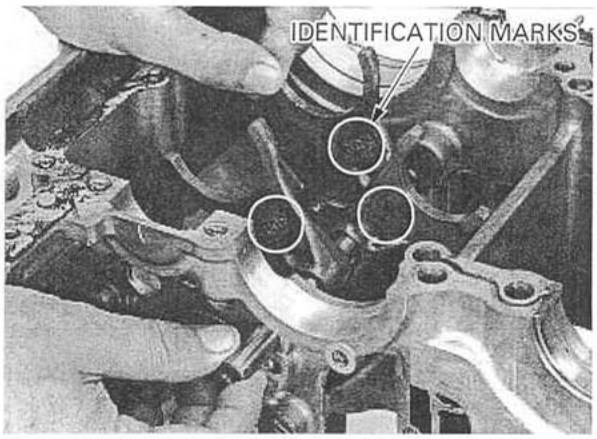

Apply locking agent to the washer/bolt threads.
Install the washers/bolts and tighten them.

TORQUE: 12 N·m (1.2 kgf·m , 9 lbf·ft)

Assemble the crankcase halves (page 11-9).

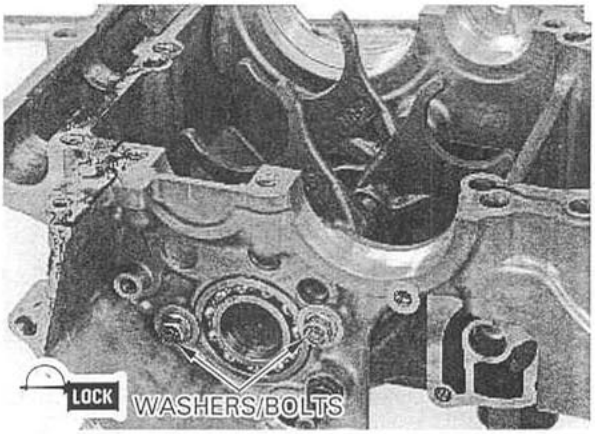

TRANSMISSION

DISASSEMBLY

Separate the crankcase halves (page 11-3).

Remove the mainshaft and countershaft assemblies.
Disassemble the mainshaft and countershaft.

Clean all disassembled parts in solvent thoroughly.

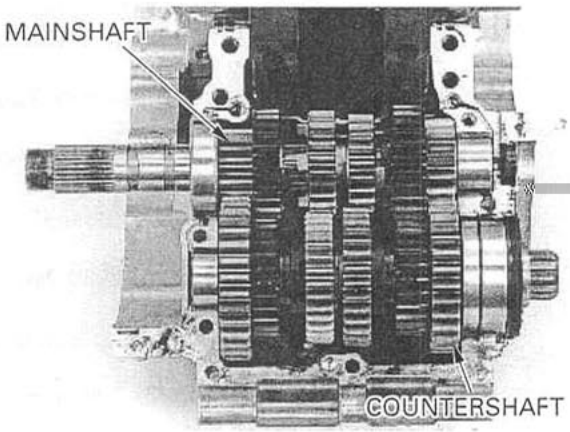

INSPECTION

Check the gear shifter groove for abnormal wear or damage.

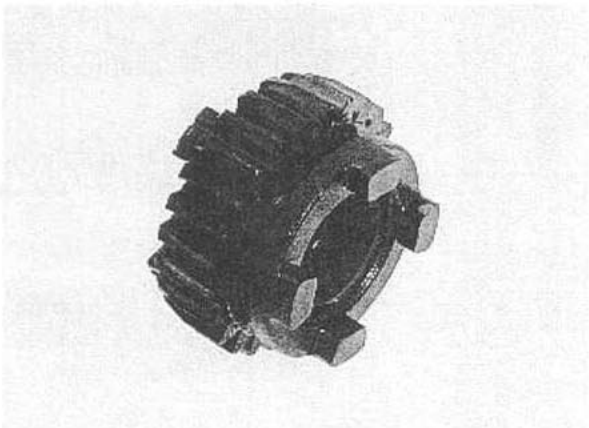

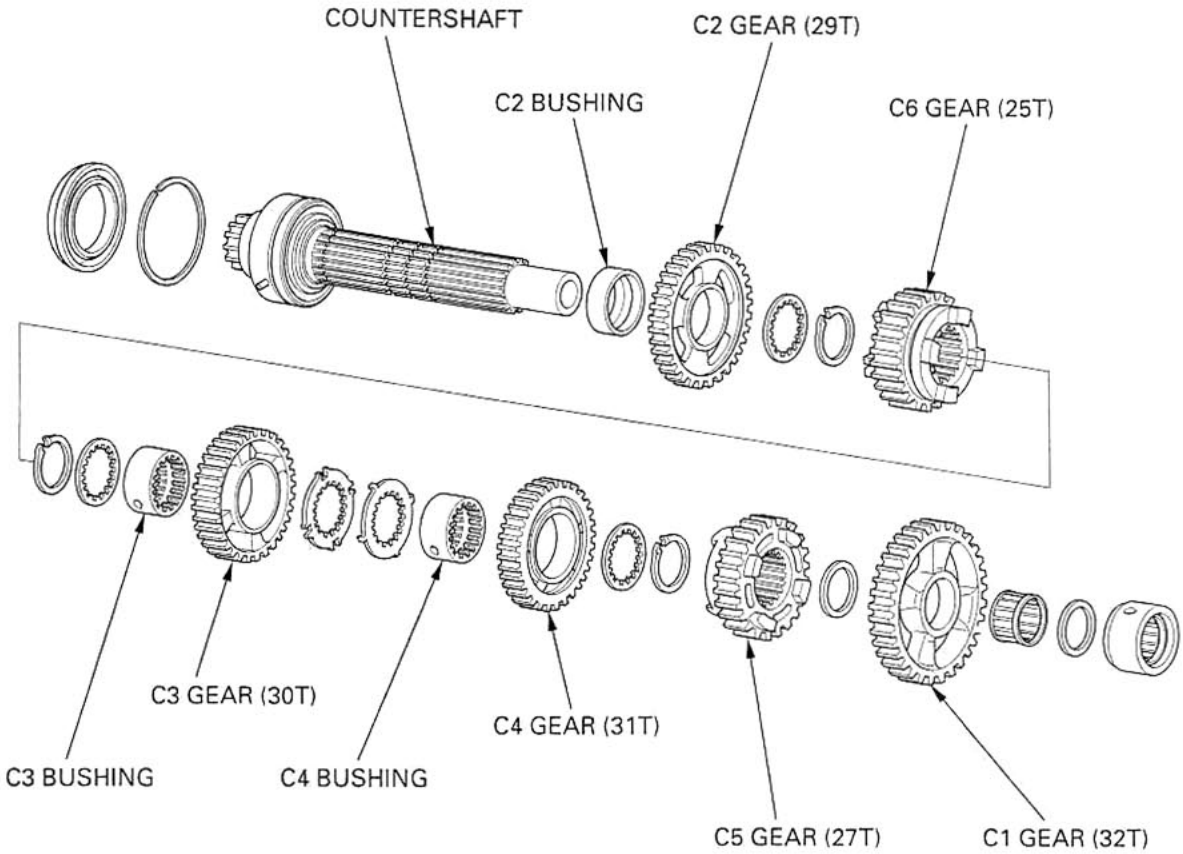
COUNTERSHAFT
C2 GEAR (29T)
C2 BUSHING
C6 GEAR (25T)
C3 GEAR (30T)
C4 GEAR (31T)
C3 BUSHING
C4 BUSHING
C5 GEAR (27T)
C1 GEAR (32T)

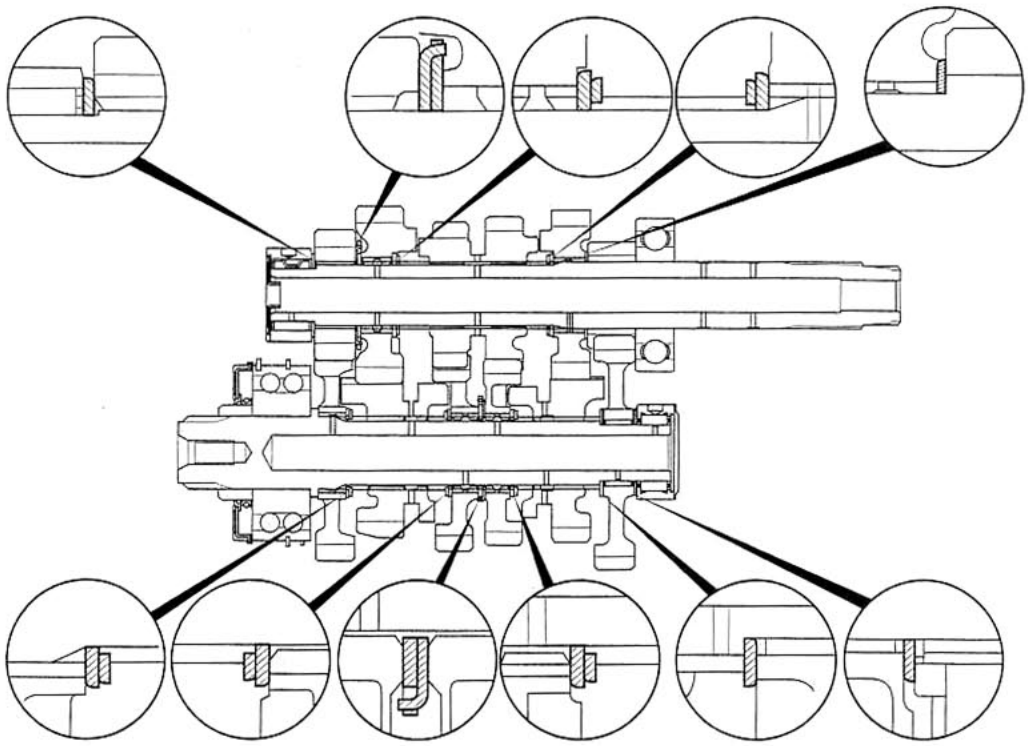

Install the two oil orifices into the upper crankcase, aligning the flat surfaces.

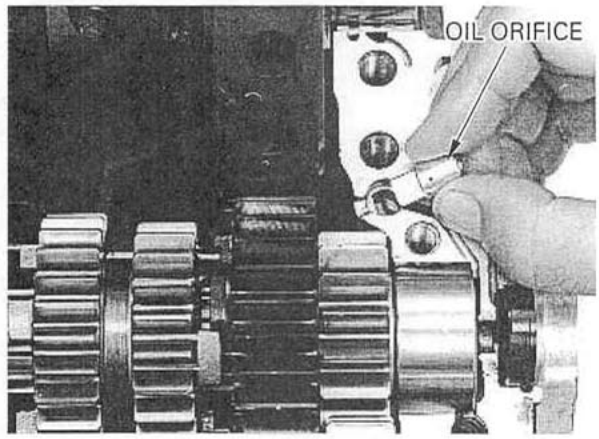

Install the three dowel pins.

Apply molybdenum oil solution to the main journal bearing surfaces on the lower crankcase.
Install the lower crankcase onto the upper crankcase, aligning the shift forks with the gear shifter grooves.

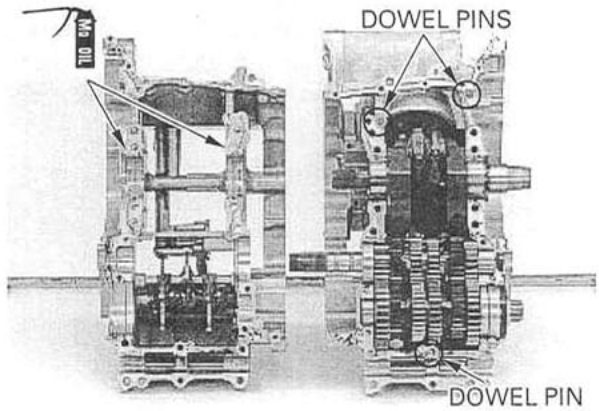

The special gray bolts cannot be reused. Once the special gray bolts have been loosened, replace them with new ones.

Apply oil to the threads and seating surfaces of the four special black bolts and four new special gray bolts, and install them.

Tighten the eight special bolts in two or three steps in the order shown on the lower crankcase.

TORQUE:
Black bolt: 52 N·m (5.3 kgf·m , 38 lbf·ft)
Gray bolt: 20 N·m (2.0 kgf·m , 14 lbf·ft) +120°

Install the three 8 mm bolts and two 6 mm bolts, and tighten them in a crisscross pattern in two or three steps.

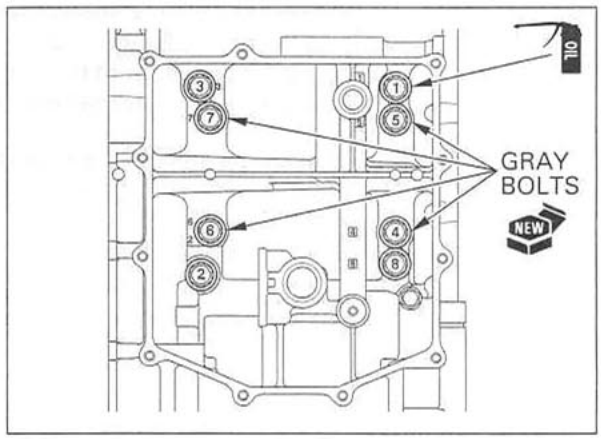

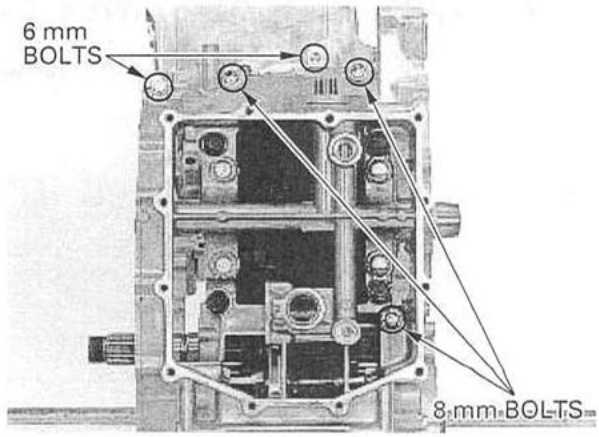

Install the one 8 mm bolt with the copper washer.

Apply oil to the three 10 mm bolt threads and seating surfaces.
Install the three 10 mm bolts, six 8 mm bolts and three 6 mm bolts, and tighten them in a crisscross pattern in two or three steps.

TORQUE: 10 mm bolt: 39 N·m (4.0 kgf·m , 29 lbf·ft)

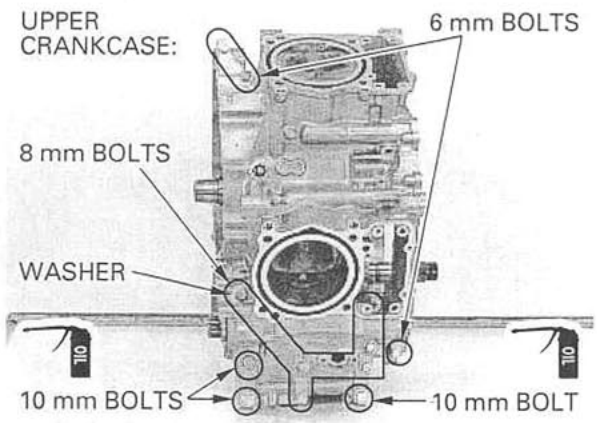

Apply locking agent to the mainshaft bearing setting plate bolt threads.
Install the setting plate and tighten the bolts securely.

Install the following:
- oil pump, strainer and pressure relief valve (section 4)
- clutch, gearshift linkage, primary drive gear and timing gear (section 9)
- flywheel and starter gears (section 10)
- starter motor (section 18)
- cylinder heads and cam gear train assemblies (section 8)
- engine (section 7)

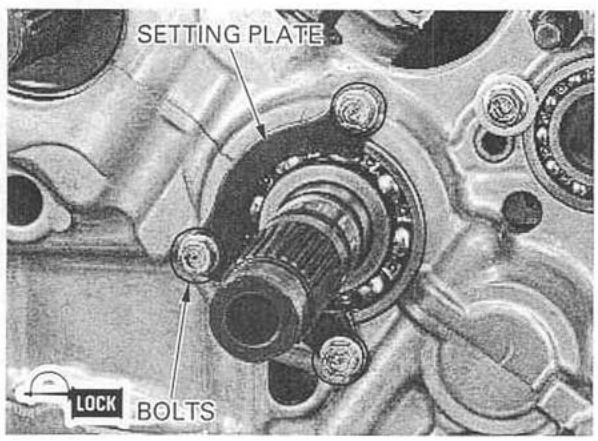

12. CRANKSHAFT/PISTON/CYLINDER

SERVICE INFORMATION

GENERAL

- The crankcase must be separated to service the crankshaft and piston/connecting rod. Refer to section 11 for crankcase separation and assembly.
- Mark and store the connecting rods, bearing caps and bearing inserts to be sure of their correct locations for reassembly.
- The crankpin and main journal bearing inserts are select fit and are identified by color codes. Select replacement bearings from the code tables. After selecting new bearings, recheck the oil clearance with a plastigauge. Incorrect oil clearance can cause major engine damage.
- Clean the oil jets in the upper crankcase with compressed air before installing the pistons.

SPECIFICATIONS

Unit: mm (in)

ITEM			STANDARD	SERVICE LIMIT
Crankshaft	Connecting rod side clearance		0.10 – 0.30 (0.004 – 0.012)	0.40 (0.016)
	Crankpin bearing oil clearance		0.032 – 0.050 (0.0013 – 0.0020)	0.060 (0.0024)
	Main journal bearing oil clearance		0.020 – 0.038 (0.0008 – 0.0015)	0.048 (0.0019)
	Runout		———	0.10 (0.004)
Piston, piston pin, piston ring	Piston O.D. at 10 (0.4) from bottom		99.970 – 99.990 (3.9358 – 3.9366)	99.900 (3.9331)
	Piston pin hole I.D.		23.002 – 23.008 (0.9056 – 0.9058)	23.03 (0.907)
	Piston pin O.D.		22.994 – 23.000 (0.9053 – 0.9055)	22.984 (0.9049)
	Piston-to-piston pin clearance		0.002 – 0.014 (0.0001 – 0.0006)	0.046 (0.0018)
	Piston ring end gap	Top	0.20 – 0.30 (0.008 – 0.012)	0.45 (0.018)
		Second	0.30 – 0.40 (0.012 – 0.016)	0.55 (0.022)
		Oil (side rail)	0.10 – 0.50 (0.004 – 0.020)	0.65 (0.026)
	Piston ring-to-ring groove clearance	Top	0.065 – 0.100 (0.0026 – 0.0039)	0.115 (0.0045)
		Second	0.035 – 0.070 (0.0014 – 0.0028)	0.085 (0.0033)
Cylinder	I.D.		100.005 – 100.025 (3.9372 – 3.9380)	100.100 (3.9409)
	Out of round		———	0.10 (0.004)
	Taper		———	0.10 (0.004)
	Warpage		———	0.05 (0.002)
Cylinder-to-piston clearance			0.015 – 0.055 (0.0006 – 0.0022)	0.200 (0.0079)
Connecting rod small end I.D.			23.020 – 23.041 (0.9063 – 0.9071)	23.051 (0.9075)
Connecting rod-to-piston pin clearance			0.020 – 0.047 (0.0008 – 0.0019)	0.067 (0.0026)

TORQUE VALUES

Connecting rod bolt	29 N·m (3.0 kgf·m , 22 lbf·ft) + 120°	Apply oil to the threads and seating surface. Plastic region torque bolt ; replace with a new one.
Crankcase 10 mm special bolt (black)	52 N·m (5.3 kgf·m , 38 lbf·ft)	Apply oil to the threads and seating surface.
Crankcase 10 mm special bolt (gray)	20 N·m (2.0 kgf·m , 14 lbf·ft) + 120°	Apply oil to the threads and seating surface.

TROUBLESHOOTING

Compression too low, hard starting or poor performance at low speed

- Leaking cylinder head gasket
- Worn, stuck or broken piston ring
- Worn or damaged cylinder and piston

Compression too high, overheating or knocking

- Excessive carbon built-up on piston head or combustion chamber

Excessive smoke

- Worn cylinder, piston or piston rings
- Improper installation of piston rings
- Scored or scratched piston or cylinder wall

Abnormal noise

- Worn piston pin or piston pin hole
- Worn connecting rod small end
- Worn cylinder, piston or piston rings
- Worn main journal bearings
- Worn crankpin bearings

Remove the lower crankcase and measure the compressed plastigauge at its widest point on each main journal to determine the oil clearance.

SERVICE LIMIT: 0.048 mm (0.0019 in)

If the oil clearance exceeds the service limit, select the correct replacement bearings.

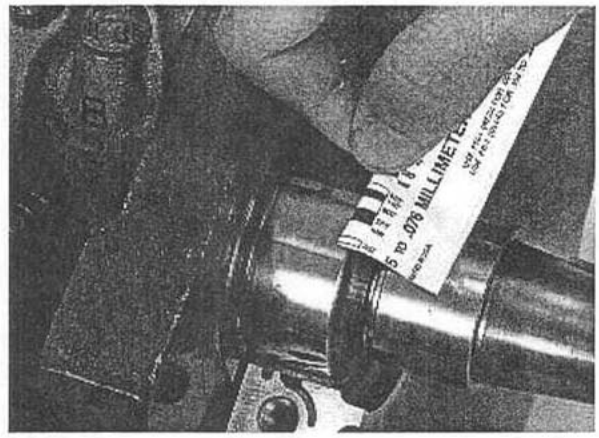

BEARING SELECTION

Number 1, 2 or 3 on the crank weight is the code for the main journal O.D.

Record the main journal O.D. code numbers.

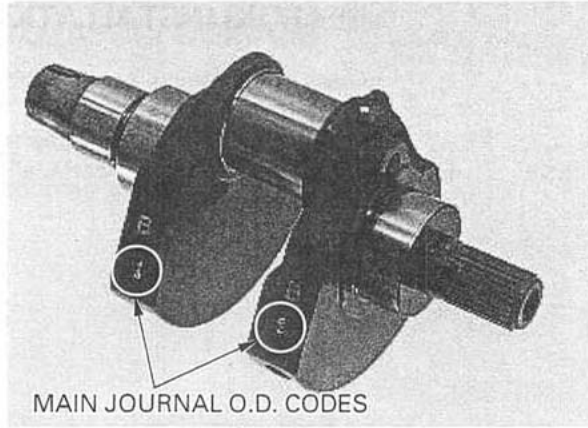

Letter A, B or C on the left side of the upper crankcase is the code for the bearing support I.D.

Record the crankcase bearing support I.D. code letters.

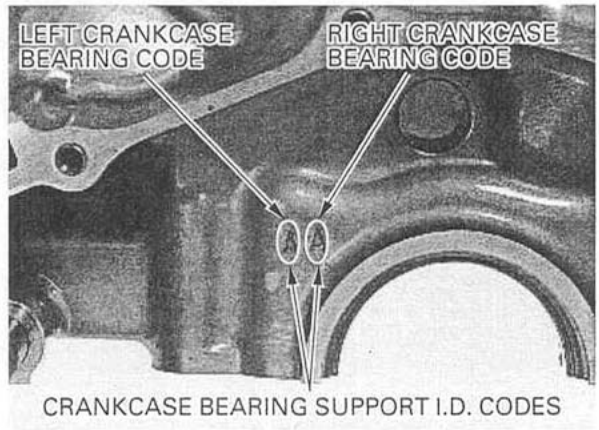

Cross reference the main journal and bearing support codes to determine the replacement bearing color code.

Bearing support I.D. code / Main journal O.D. code	A	B	C
1	Yellow	Green	Brown
2	Green	Brown	Black
3	Brown	Black	Blue

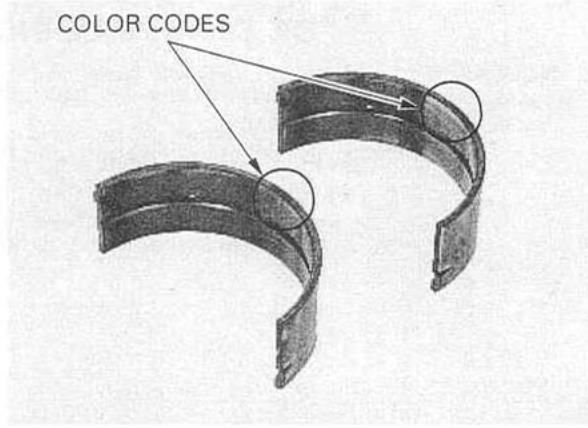

After selecting new bearings, recheck the oil clearance with plastigauge. Incorrect oil clearance can cause major engine damage.

BEARING INSTALLATION

Clean the bearing outer surfaces and crankcase bearing supports.
Install the main journal bearing inserts onto the crankcase bearing supports, aligning each tab with each groove.

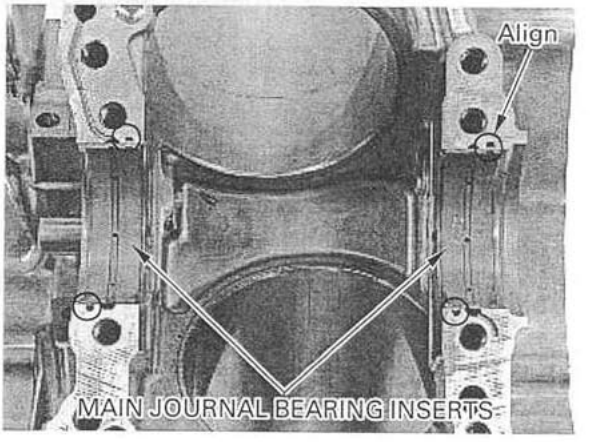

CRANKPIN BEARING

Remove the crankshaft (page 12-3).

BEARING INSPECTION

Check the bearing inserts for unusual wear or peeling.
Check the bearing tabs for damage.

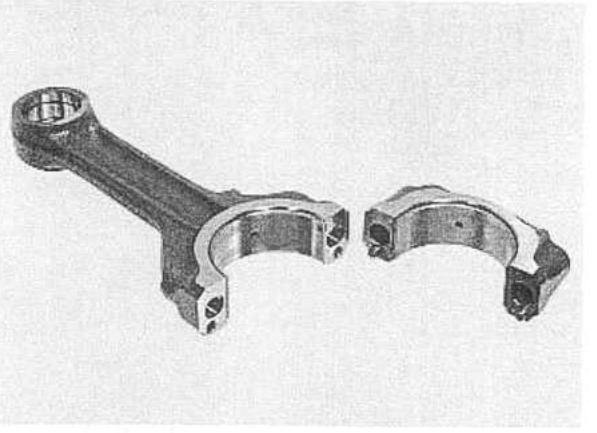

OIL CLEARANCE INSPECTION

Do not rotate the crankshaft during inspection.

Clean off any oil from the bearing inserts and crankpin.
Install the crankshaft onto the upper crankcase.
Set the connecting rods onto the crankpin.
Put strips of plastigauge lengthwise on the crankpin avoiding the oil hole.

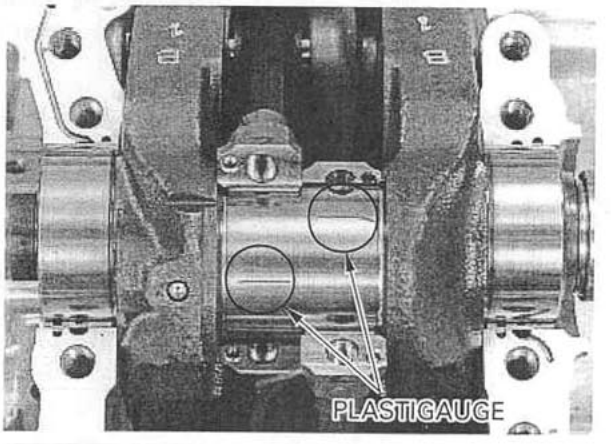

Cross reference the connecting rod and crankpin codes to determine the replacement bearing color code.

Connecting rod I.D. code / Crankpin O.D. code	1	2	3
A	Yellow	Green	Brown
B	Green	Brown	Black
C	Brown	Black	Blue

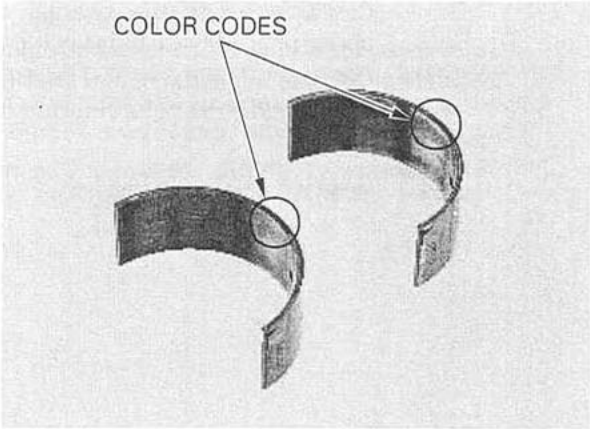

NOTE:

- There is one painted mark on the bearing insert for the front connecting rod, and two painted marks for the rear connecting rod. Use correct bearing inserts.

After selecting new bearings, recheck the oil clearance with plastigauge. Incorrect oil clearance can cause major engine damage.

BEARING INSTALLATION

Clean the bearing outer surfaces, bearing cap and connecting rod.
Install the crankpin bearing inserts onto the bearing cap and connecting rod aligning each tab with each groove.

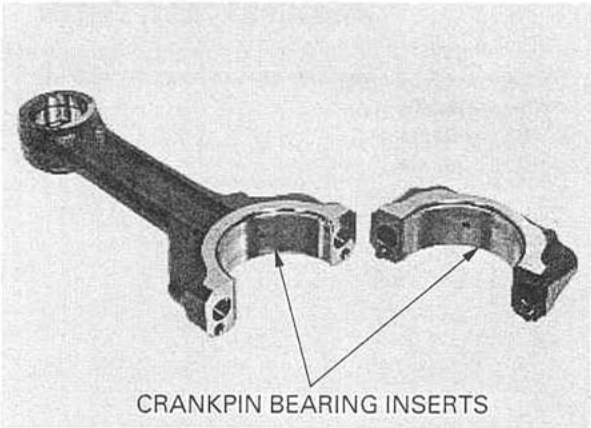

PISTON/CYLINDER

PISTON REMOVAL

Remove the transmission (page 11-5).
Remove the crankshaft (page 12-3).

Any ridge on the cylinder must be removed with an automotive type ridge reamer before removing the pistons.

Push each piston/connecting rod out through the top of the cylinder bore.

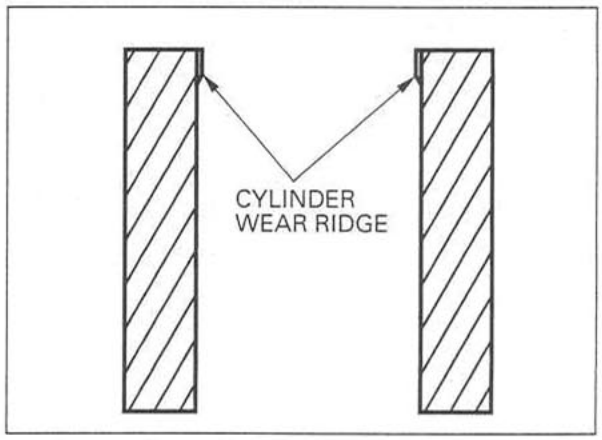

Remove the piston pin clips with the pliers.
Push the piston pin out of the piston and connecting rod, and remove the piston.

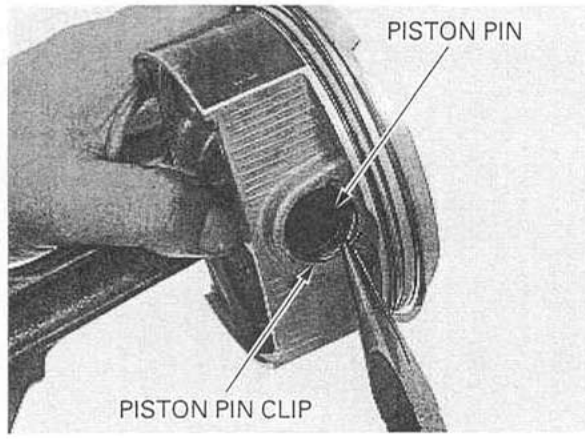

PISTON RING REMOVAL

Do not damage the piston ring by spreading the ends too far.

Spread each piston ring and remove it by lifting up at a point opposite the gap.

Never use a wire brush; it will scratch the groove.

Clean carbon deposits from the piston ring grooves with a ring that will be discarded.

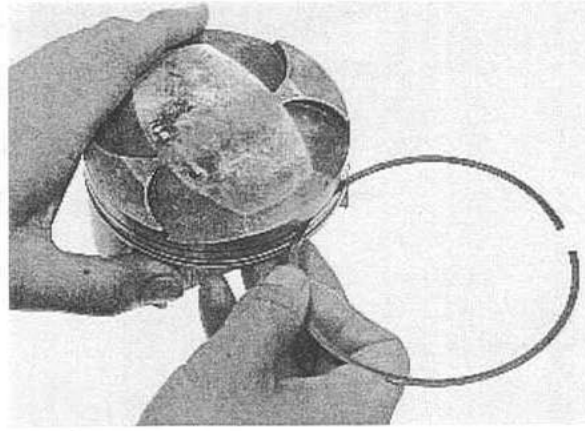

PISTON INSPECTION

Inspect the piston rings for movement by rotating the rings. The rings should be able to move in their grooves without catching.

Push the ring until the outer surface of the piston ring is nearly flush with the piston and measure the ring-to-ring groove clearance.

SERVICE LIMITS: Top: 0.115 mm (0.0045 in)
Second: 0.085 mm (0.0033 in)

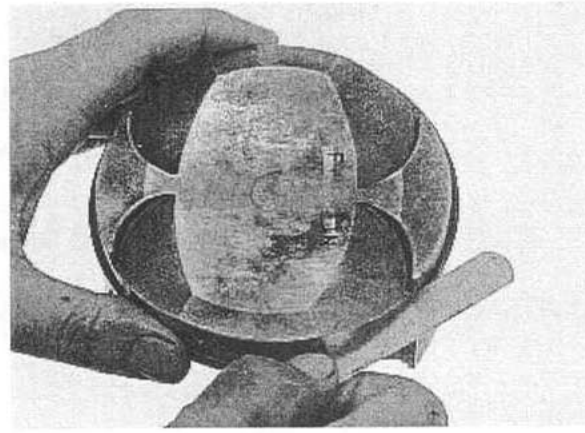

Insert each piston ring into the bottom of the cylinder squarely using the piston.
Measure the ring end gap.

SERVICE LIMITS: Top: 0.45 mm (0.018 in)
Second: 0.55 mm (0.022 in)
Oil (side rail): 0.65 mm (0.026 in)

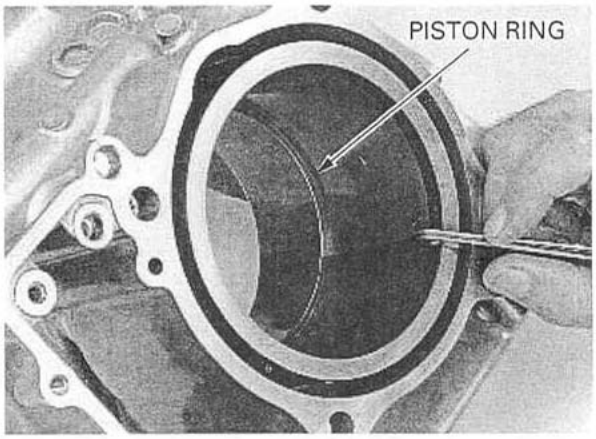

Measure the piston pin O.D. at piston and connecting rod sliding areas.

SERVICE LIMIT: 22.984 mm (0.9049 in)

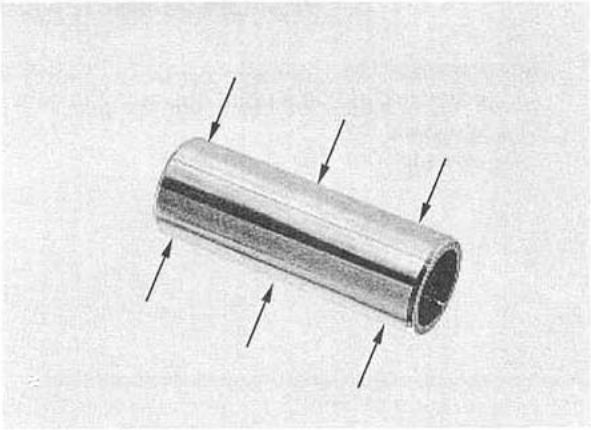

Measure the piston pin hole I.D.

SERVICE LIMIT: 23.03 mm (0.907 in)

Calculate the piston-to-piston pin clearance.

SERVICE LIMIT: 0.046 mm (0.0018 in)

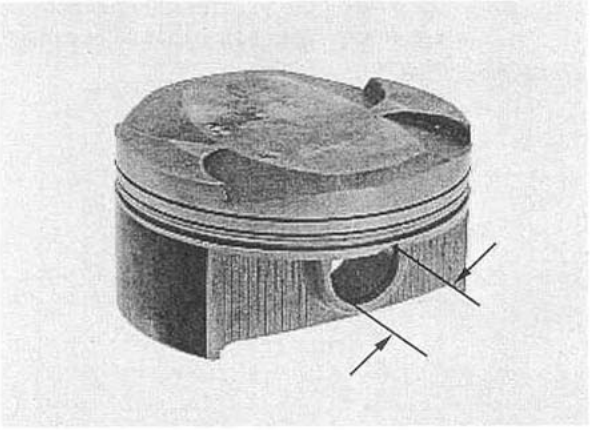

Measure the connecting rod small end I.D.

SERVICE LIMIT: 23.051 mm (0.9075 in)

Calculate the connecting rod-to-piston pin clearance.

SERVICE LIMIT: 0.067 mm (0.0026 in)

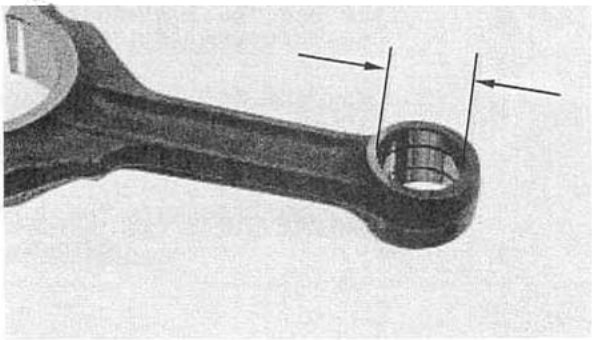

PISTON RING INSTALLATION

Carefully install the piston rings into the piston ring grooves with the marks facing up.

NOTE:
- Be careful not to damage the piston and rings during installation.
- To install the oil ring, install the spacer first, then install the side rails.

Stagger the piston ring end gaps 120 degrees apart from each other.
Stagger the side rail end gaps as shown.

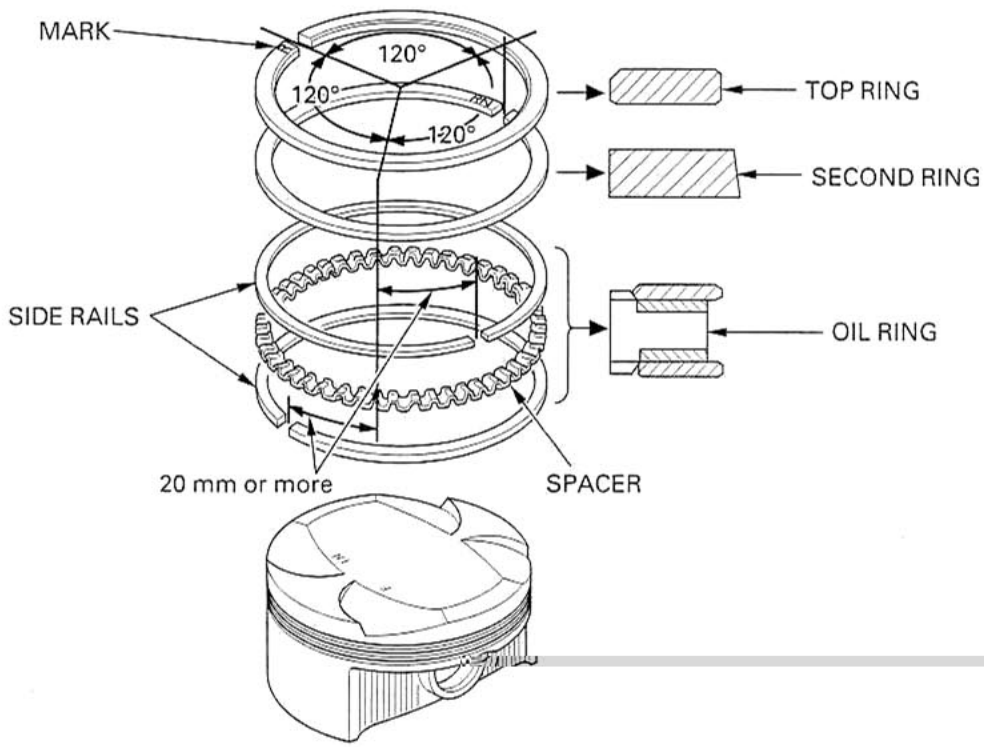

PISTON INSTALLATION

Apply molybdenum oil solution to the connecting rod small end inner surfaces, piston pin holes and piston pin.

Front cylinder piston:
Note that the connecting rod has "MCFF" mark.
Install the piston on the connecting rod so the "F" and "IN" marks are facing the same direction as the oil hole in the rod.

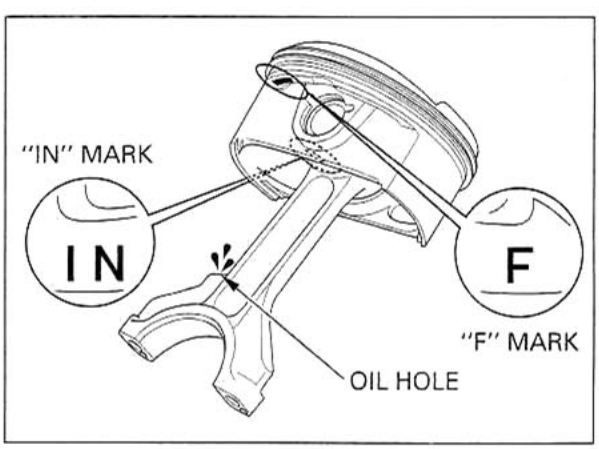

Rear cylinder piston:
Note that the connecting rod has "MCFR" mark.
Install the piston on the connecting rod so the "R" and "IN" marks are opposite the oil hole in the rod.

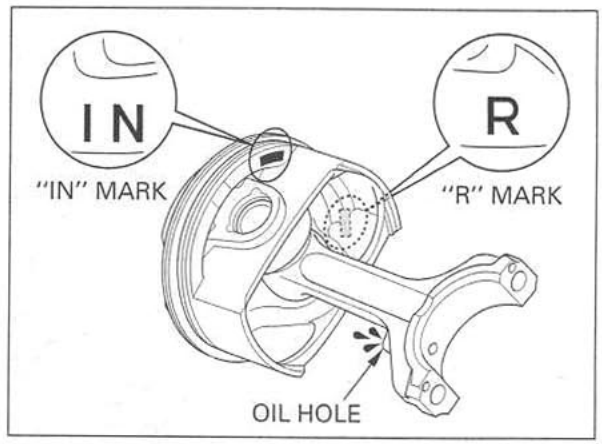

Install the piston pin into the piston and connecting rod.
Install new piston pin clips into the groove of the piston pin hole.

NOTE:
- Make sure the piston pin clips are seated securely.
- Do not align the piston pin clip end gap with the piston cutout.

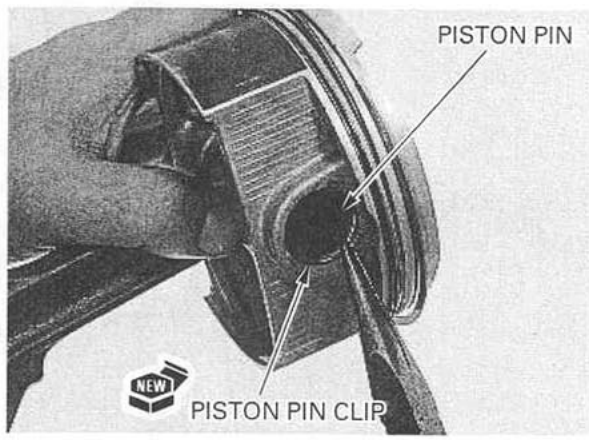

Coat the piston and piston rings with engine oil.
Install the piston/connecting rod in the cylinder with the "IN" mark toward the intake side, using a commercially available piston ring compressor tool.

Install the crankshaft (page 12-3).
Install the transmission (page 11-9).

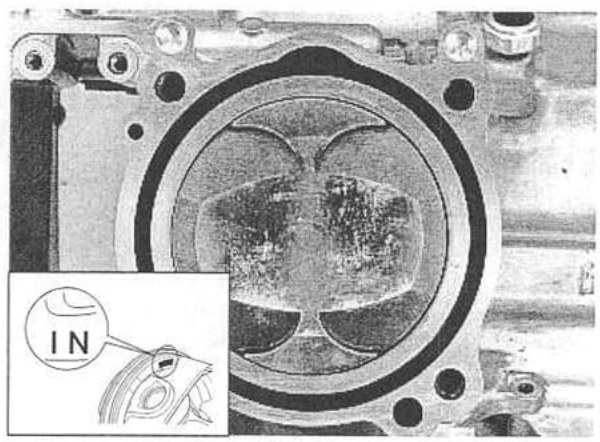

13. FRONT WHEEL/SUSPENSION/STEERING

SERVICE INFORMATION

GENERAL

- A hoist or equivalent is required to support the motorcycle when servicing the front wheel, fork and steering stem.
- Refer to section 15 for brake system service.

SPECIFICATIONS

Unit: mm (in)

ITEM			STANDARD	SERVICE LIMIT
Minimum tire tread depth			———	1.5 (0.06)
Cold tire pressure	Up to 90 kg (200 lbs) load		250 kPa (2.50 kgf/cm², 36 psi)	———
	Up to maximum weight capacity		250 kPa (2.50 kgf/cm², 36 psi)	———
Axle runout			———	0.20 (0.008)
Wheel rim runout	Radial		———	2.0 (0.08)
	Axial		———	2.0 (0.08)
Wheel balance weight			———	60 g (2.1 oz)max.
Fork	Spring free length	'00 – '01	255.6 (10.06)	250.5 (9.86)
		After '01	249.2 (9.81)	244.2 (9.61)
	Tube runout		———	0.20 (0.008)
	Recommended fluid		Pro Honda Suspension Fluid SS-8	———
	Fluid level		135 (5.3)	———
	Fluid capacity	'00 – '01	513 ± 2.5 cm³ (17.3 ± 0.08 US oz, 18.1 ± 0.09 Imp oz)	———
		After '01	498 ± 2.5 cm³ (16.8 ± 0.08 US oz, 17.6 ± 0.09 Imp oz)	———
Steering head bearing preload			1.4 – 2.1 kgf (3.1 – 4.6 lbf)	———

TORQUE VALUES

Handlebar weight mounting screw		10 N·m (1.0 kgf·m , 7 lbf·ft)	ALOC screw : replace with a new one
Front axle bolt		59 N·m (6.0 kgf·m , 43 lbf·ft)	
Front axle holder bolt		22 N·m (2.2 kgf·m , 16 lbf·ft)	
Front brake disc bolt		20 N·m (2.0 kgf·m , 14 lbf·ft)	ALOC bolt : replace with a new one
Front brake caliper mounting bolt		30 N·m (3.1 kgf·m , 22 lbf·ft)	Apply locking agent to the threads.
Fork cap		34 N·m (3.5 kgf·m , 25 lbf·ft)	
Fork center bolt		34 N·m (3.5 kgf·m , 25 lbf·ft)	
Fork top bridge pinch bolt		26 N·m (2.7 kgf·m , 20 lbf·ft)	
Fork bottom bridge pinch bolt		26 N·m (2.7 kgf·m , 20 lbf·ft)	
Front brake hose clamp nut (front fender side)		10 N·m (1.0 kgf·m , 7 lbf·ft)	
Front brake caliper bracket bolt		49 N·m (5.0 kgf·m , 36 lbf·ft)	Apply locking agent to the threads.
Steering stem nut	('00 – '01)	103 N·m (10.5 kgf·m , 76 lbf·ft)	
	(After '01)	137 N·m (14.0 kgf·m , 101 lbf·ft)	
Steering bearing adjustment nut	('00 – '01)	32 N·m (3.3 kgf·m , 24 lbf·ft)	Apply oil to the threads.
	(After '01)	52 N·m (5.3 kgf·m , 38 lbf·ft)	Apply oil to the threads.
Front brake hose clamp bolt (stem side)		10 N·m (1.0 kgf·m , 7 lbf·ft)	
Front brake hose 3-way joint bolt		10 N·m (1.0 kgf·m , 7 lbf·ft)	
Front master cylinder holder bolt		12 N·m (1.2 kgf·m , 9 lbf·ft)	

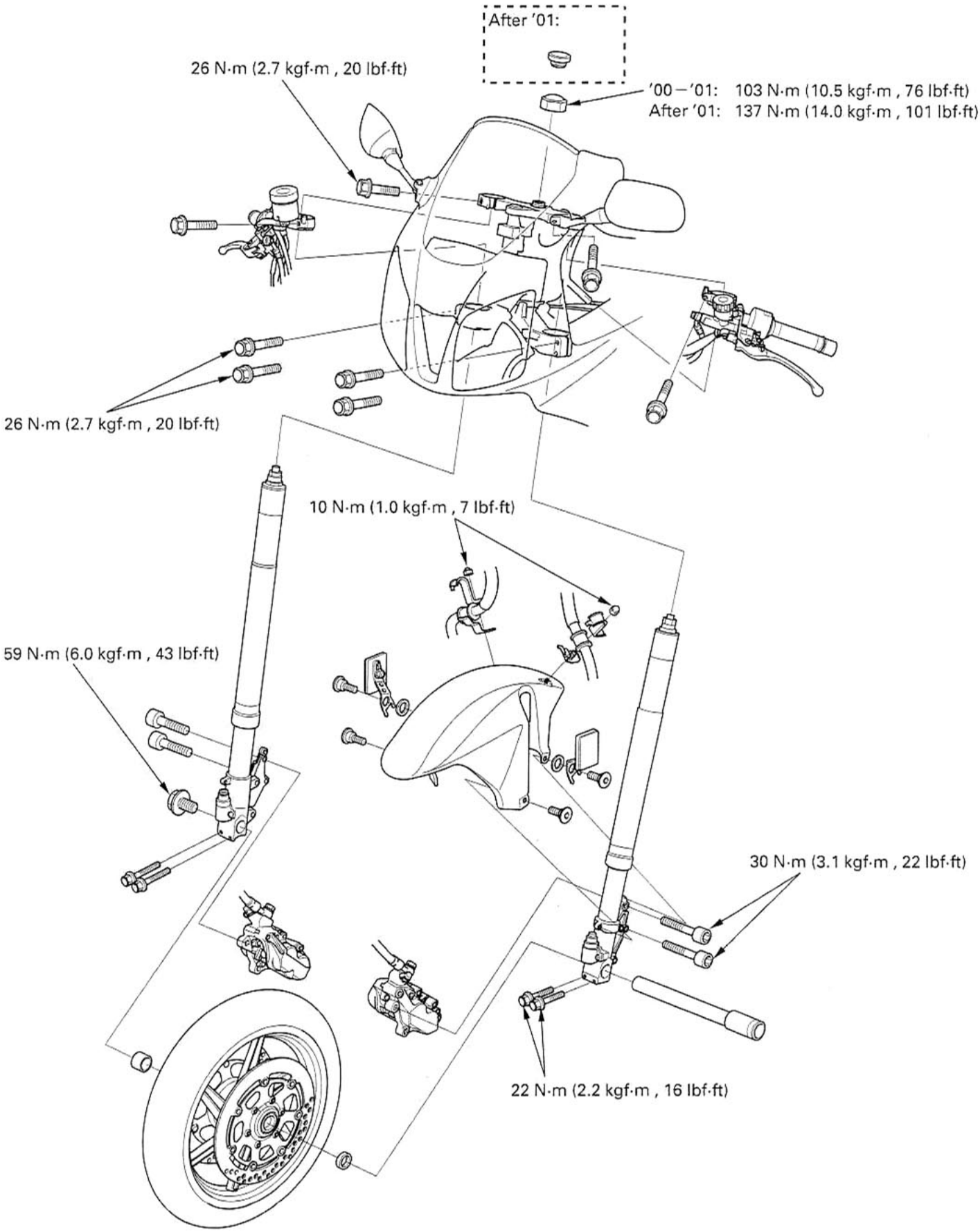
After '01:
26 N·m (2.7 kgf·m , 20 lbf·ft)
'00 – '01: 103 N·m (10.5 kgf·m , 76 lbf·ft)
After '01: 137 N·m (14.0 kgf·m , 101 lbf·ft)
26 N·m (2.7 kgf·m , 20 lbf·ft)
10 N·m (1.0 kgf·m , 7 lbf·ft)
59 N·m (6.0 kgf·m , 43 lbf·ft)
30 N·m (3.1 kgf·m , 22 lbf·ft)
22 N·m (2.2 kgf·m , 16 lbf·ft)

TOOLS

Bearing remover shaft	07746-0050100	
Bearing remover head, 22 mm	07746-0050700	
Driver	07749-0010000	
Attachment, 42 × 47 mm	07746-0010300	
Pilot, 22 mm	07746-0041000	
Fork seal driver, 43 mm	07YMD-MCF0100	or 07KMD-KZ30100 with 07NMD-KZ30101 (except U.S.A.) or 07NMD-KZ3010A (U.S.A. only)
Fork damper holder	07YMB-MCF0101	or 07YMB-MCFA100 (U.S.A. only)
Socket wrench, 39 × 41 mm (After '01)	07GMA-KS40100	or equivalent commercially available in U.S.A.
Steering stem socket ('00–'01)	07916-3710101	or 07916-3710100 (U.S.A. only)
(After '01)	07HMA-MR70100	or 07702-0020001 (U.S.A. only)
Driver attachment A ('00–'01)	07946-KM90100	not available in U.S.A.
Driver shaft assembly	07946-KM90300	
Race remover A ('00–'01)	07946-KM90401	
Assembly base	07946-KM90600	
Race remover B	07NMF-MT70110	
Driver attachment B	07NMF-MT70120	(After '01: two required)
Attachment, 35 mm I.D.	07746-0030400	
Main bearing driver attachment	07946-ME90200	
Fork seal driver weight	07947-KA50100	
Oil seal driver	07965-MA60000	
Installer shaft	07VMF-KZ30200	
Installer attachment A	07VMF-MAT0100 ('00–'01)	
Installer attachment B	07VMF-MAT0200 (After '01: two required)	
Remover attachment A	07VMF-MAT0300 ('00–'01)	
Remover attachment B	07VMF-MAT0400	

TROUBLESHOOTING

Hard steering
- Steering bearing adjustment nut too tight
- Worn or damaged steering head bearings
- Bent steering stem
- Insufficient tire pressure

Steers one side or does not track straight
- Damaged or loose steering head bearings
- Bent forks
- Bent axle
- Wheel installed incorrectly
- Bent frame
- Worn or damaged wheel bearings
- Worn or damaged swingarm pivot bearings

Front wheel wobbling
- Bent rim
- Worn or damaged front wheel bearings
- Faulty front tire
- Unbalanced front tire and wheel

Front wheel turns hard
- Faulty front wheel bearings
- Bent front axle
- Front brake drag

Soft suspension
- Insufficient fluid in fork
- Incorrect fork fluid weight
- Weak fork springs
- Insufficient tire pressure

Hard suspension
- Bent fork tubes
- Too much fluid in fork
- Incorrect fork fluid weight
- Clogged fork fluid passage

Front suspension noise
- Insufficient fluid in fork
- Loose fork fasteners

FRONT WHEEL

REMOVAL

Support the motorcycle securely using a hoist or equivalent and raise the front wheel off the ground.

Support the brake caliper so it does not hang from the brake hose. Do not twist the brake hose.
Do not operate the brake lever after removing the brake calipers.

Remove the mounting bolts and front brake calipers from the caliper brackets.

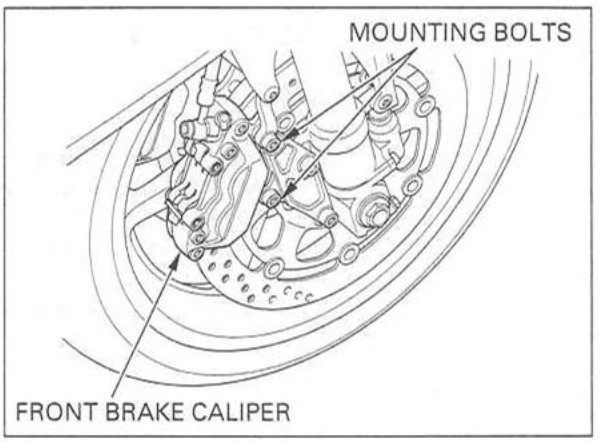

Loosen the right front axle holder bolts.
Remove the front axle bolt.

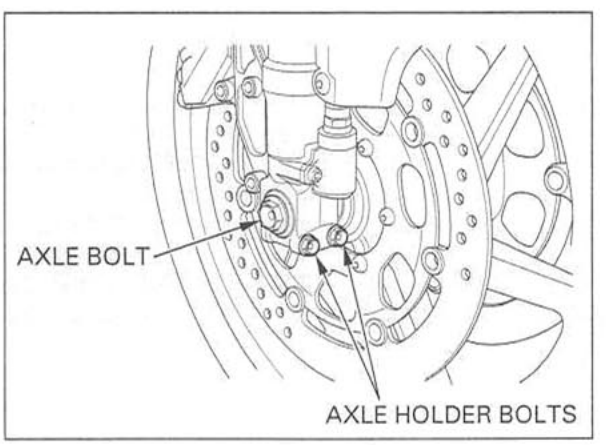

Loosen the left front axle holder bolts.
Remove the front axle and the front wheel.

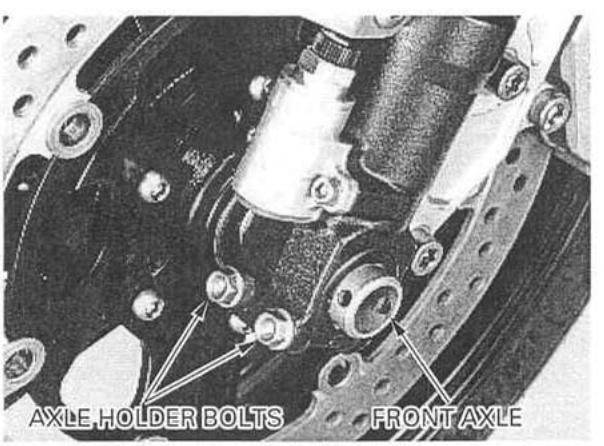

Remove the side collars.

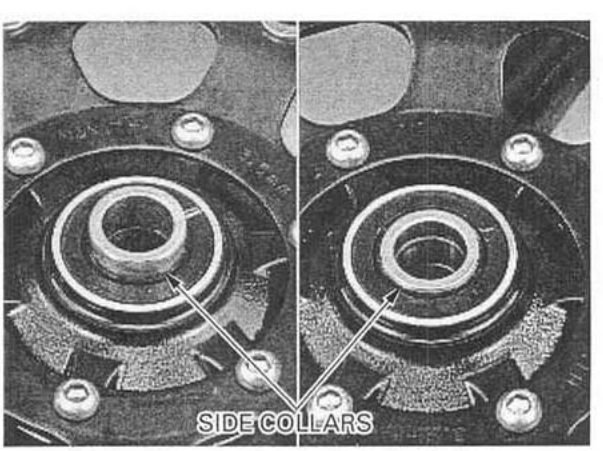

INSPECTION

AXLE

Set the front axle in V-blocks.
Turn the front axle and measure the runout using a dial indicator.
Actual runout is 1/2 the total indicator reading.

SERVICE LIMIT: 0.20 mm (0.008 in)

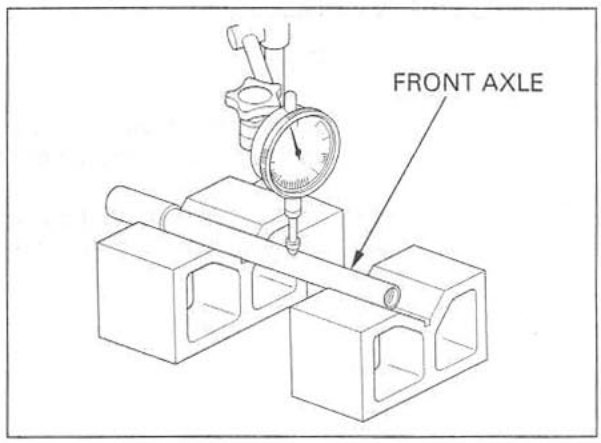

WHEEL RIM

Check the rim runout by placing the wheel in a truing stand.
Spin the wheel slowly and read the runout using a dial indicator.
Actual runout is 1/2 the total indicator reading.

SERVICE LIMITS: Radial: 2.0 mm (0.08 in)
Axial: 2.0 mm (0.08 in)

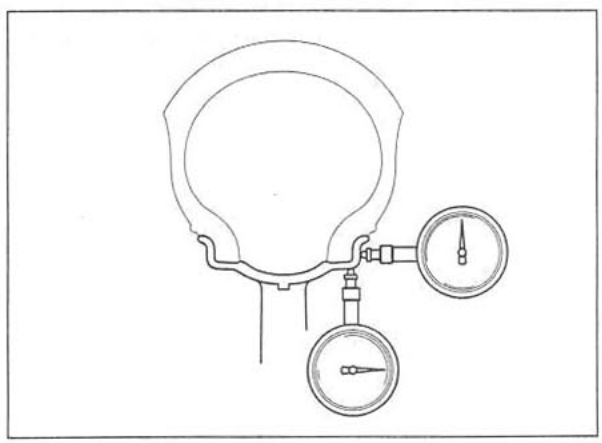

WHEEL BEARING

Turn the inner race of each bearing with your finger. The bearings should turn smoothly and quietly. Also check that the bearing outer race fits tightly in the hub.

Replace the wheel bearings in pairs.

Remove and discard the bearings if the races do not turn smoothly and quietly, or if they fit loosely in the hub.

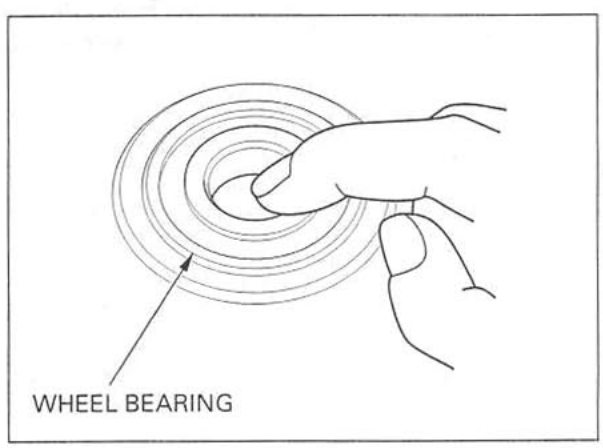

DISASSEMBLY

Remove the dust seals from the wheel hub.
Remove the disc bolts and brake discs from the wheel hub.

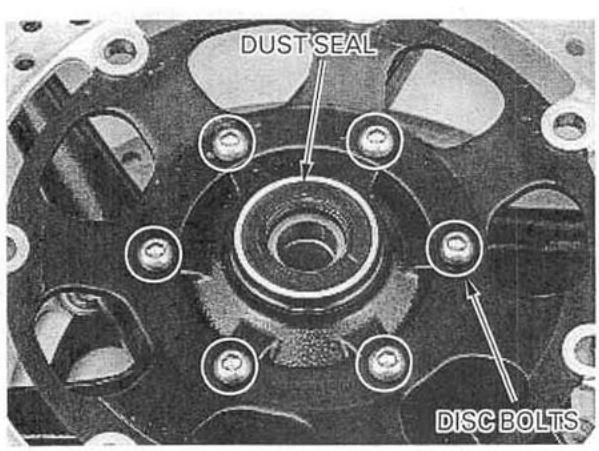

Replace the wheel bearings in pairs. Do not reuse old bearings.

Install the bearing remover head into the bearing. From the opposite side, install the bearing remover shaft and drive the bearing out of the wheel hub. Remove the distance collar and drive out the other bearing.

TOOLS:

Bearing remover shaft	07746-0050100
Bearing remover head, 22 mm	07746-0050700

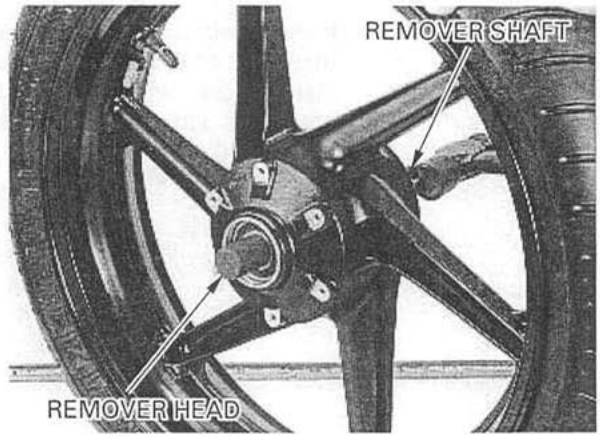

ASSEMBLY

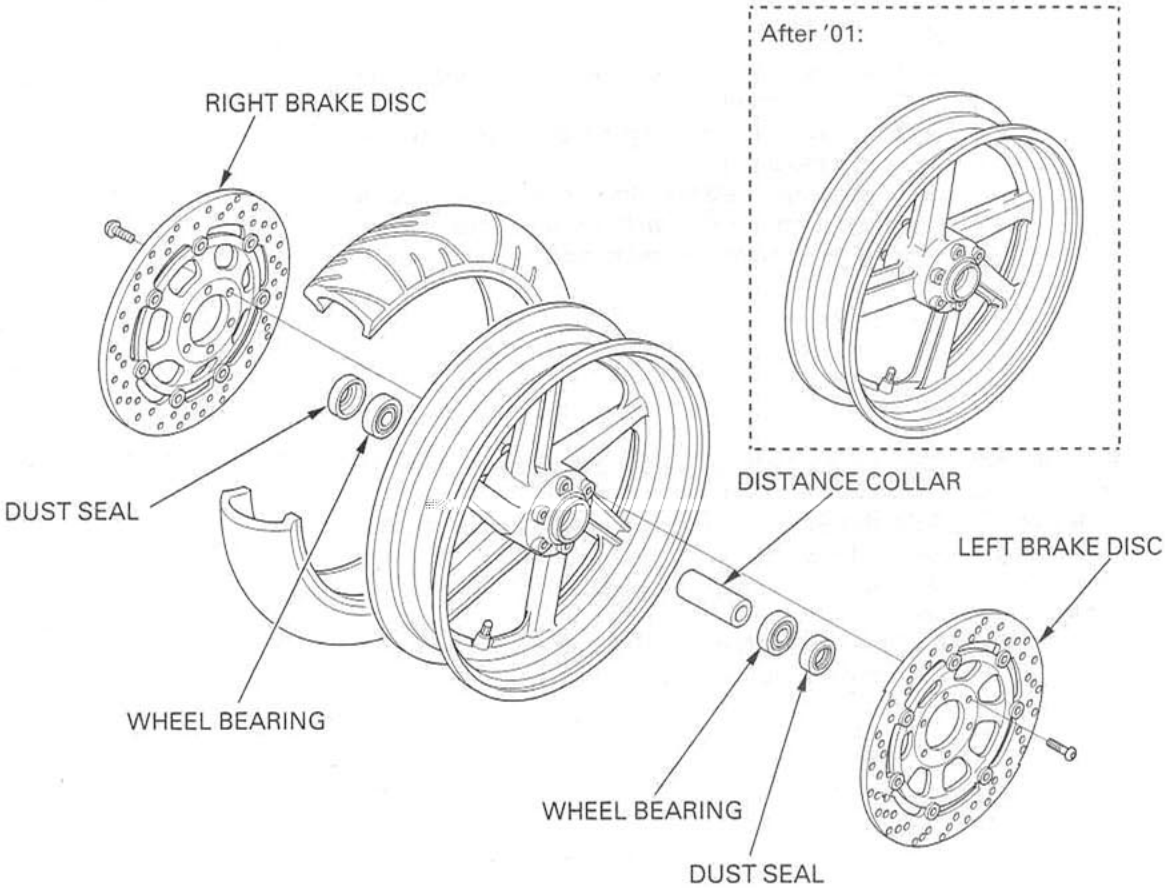

Drive in a new right bearing squarely with the marking side facing up until it is fully seated.
Install the distance collar.
Drive in a new left bearing squarely with the marking side facing up until it is fully seated.

TOOLS:

Driver	07749-0010000
Attachment, 42 × 47 mm	07746-0010300
Pilot, 22 mm	07746-0041000

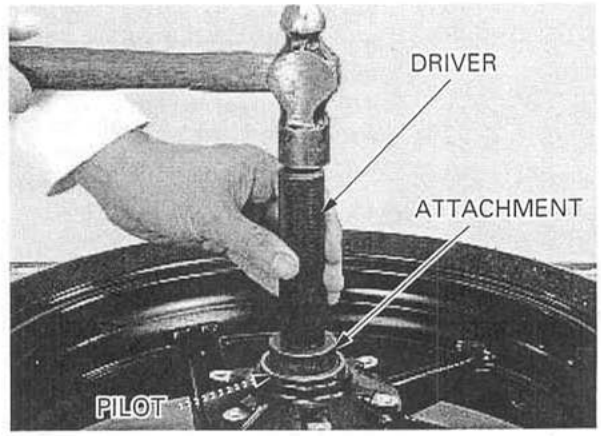

Install the brake discs with the arrow mark facing in the direction of rotation.
Install new disc bolts and tighten them in a crisscross pattern in two or three steps.

TORQUE: 20 N·m (2.0 kgf·m , 14 lbf·ft)

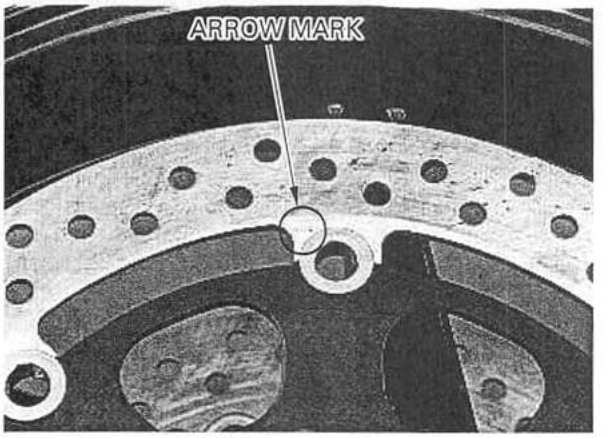

WHEEL BALANCE

NOTE:
- Mount the tire with the arrow mark facing in the direction of rotation.
- The wheel balance must be checked when the tire is remounted.
- For optimum balance, the tire balance mark (a paint dot on the side wall) must be located next to the valve stem. Remount the tire if necessary.

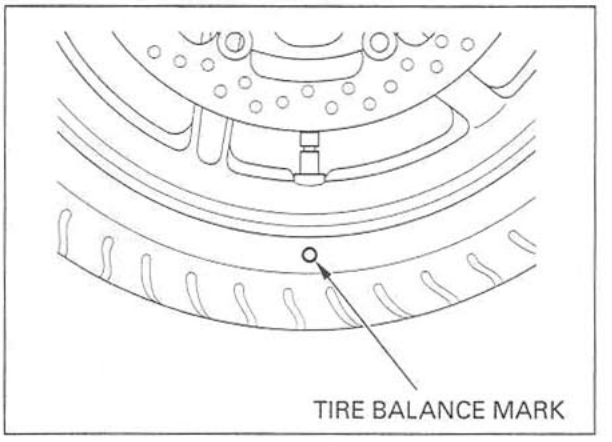

Wheel balance directly affects the stability, handling and overall safety of the motorcycle. Carefully check balance before reinstalling the wheel.

Mount the wheel, tire and brake disc assembly on an inspection stand.
Spin the wheel, allow it to stop, and mark the lowest (heaviest) part of the wheel with chalk.
Do this two or three times to verify the heaviest area.
If wheel is balanced, it will not stop consistently in the same position.

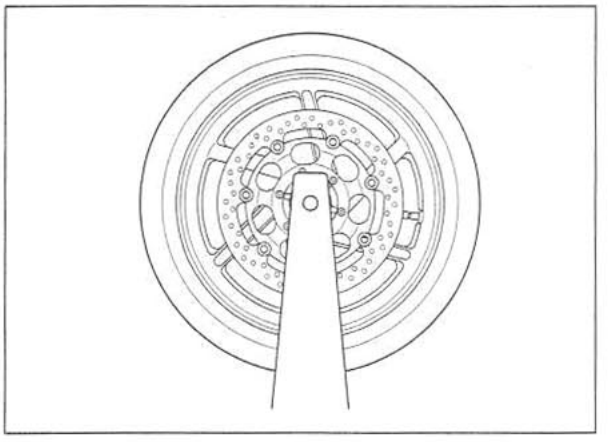

To balance the wheel, install balance weights on the lightest side of rim, the side opposite the chalk mark.
Adjust enough weight so the wheel will no longer stop in the same position when it is spun.
Do not add more than 60 g (2.1 oz) to the wheel.

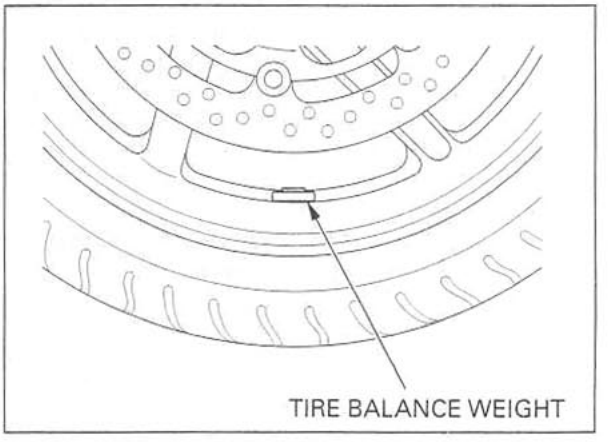

Apply grease to new dust seal lips.
Install the dust seals into the wheel hub.

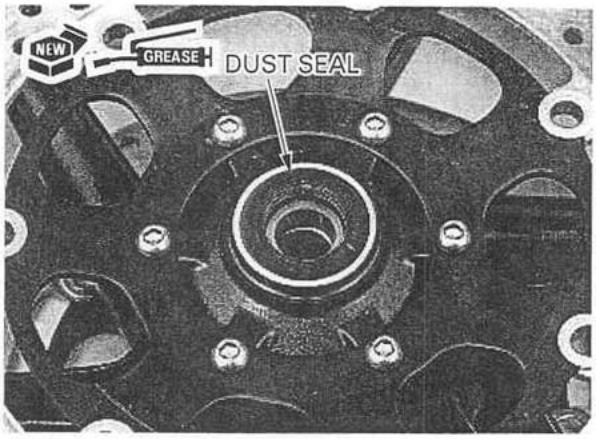

INSTALLATION

The right side collar is longer than the left side collar.

Install the side collars.

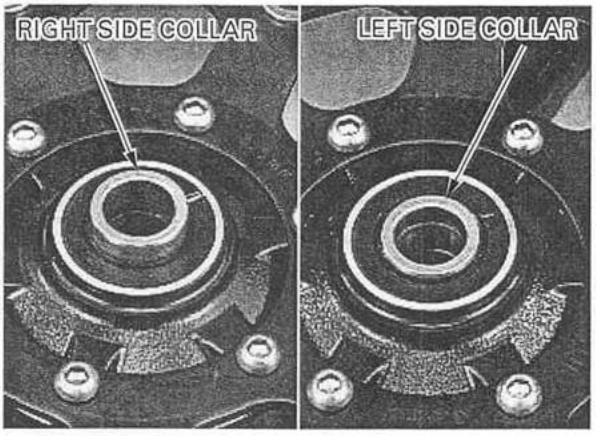

Apply a thin coat of grease to the front axle.
Install the front wheel between the fork legs and insert the front axle.

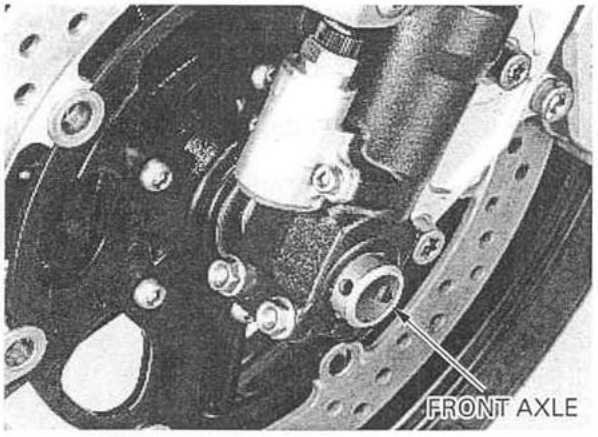

Install the axle bolt and tighten it while holding the axle.

TORQUE: 59 N·m (6.0 kgf·m , 43 lbf·ft)

Tighten the right axle holder bolts.

TORQUE: 22 N·m (2.2 kgf·m , 16 lbf·ft)

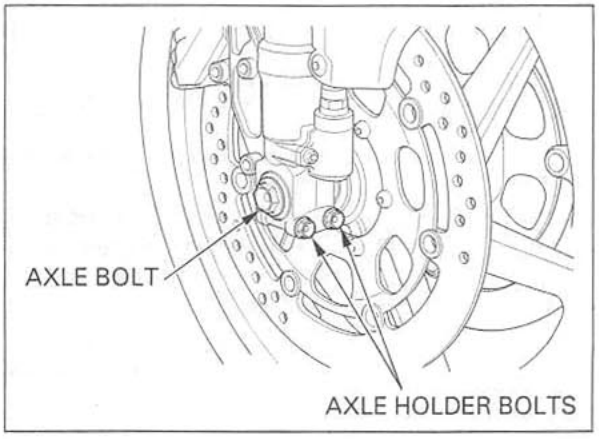

Apply locking agent to the caliper mounting bolt threads.
Install the brake calipers and tighten the mounting bolts.

TORQUE: 30 N·m (3.1 kgf·m , 22 lbf·ft)

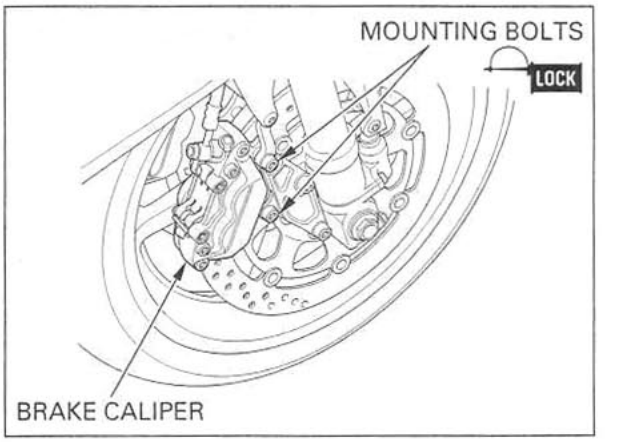

With the front brake applied, pump the forks up and down several times to seat the axle and check brake operation.

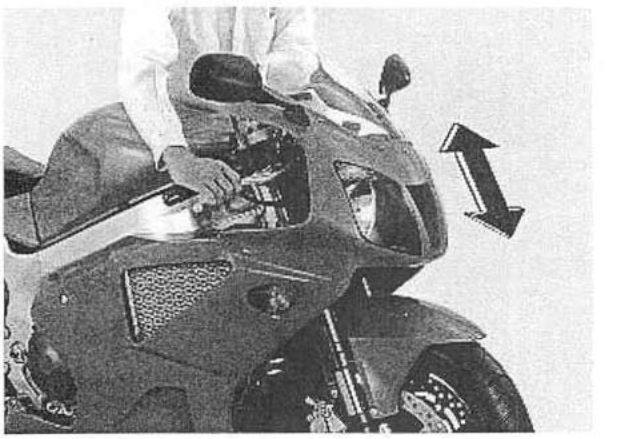

Make sure the index line on the front axle aligns with the outer surface of the left fork leg.

Tighten the left axle holder bolts.

TORQUE: 22 N·m (2.2 kgf·m , 16 lbf·ft)

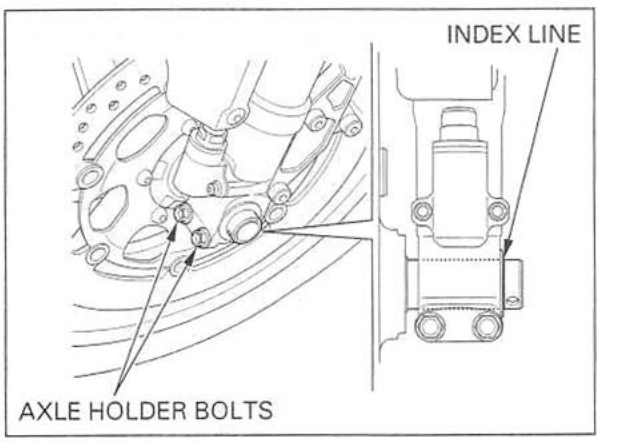

FORK

REMOVAL

Remove the front brake hose clamps from the front fender.
Remove the four bolts, two reflectors, rubber washers and the front fender.
Remove the caliper bracket bolts and the bracket with the caliper from the fork leg.

Remove the front wheel (page 13-3).

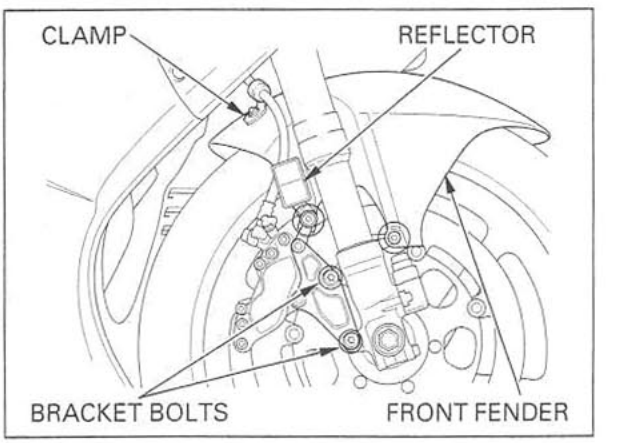

Loosen the fork top bridge pinch bolt and handlebar pinch bolt.

When the fork is ready to be disassembled, loosen the fork cap, but do not remove it.

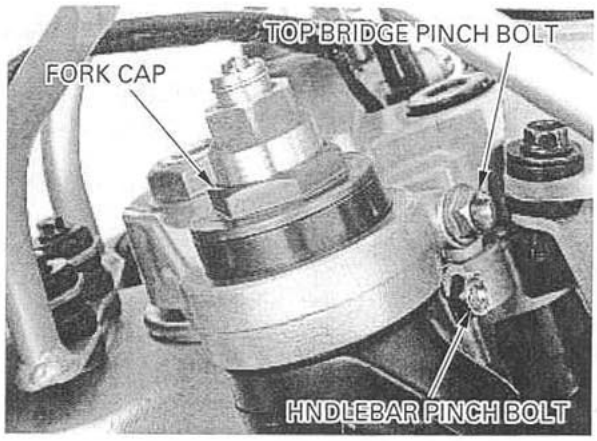

Keep the clutch or brake reservoir upright to prevent air from entering the hydraulic system.

While holding the fork leg, loosen the fork bottom bridge pinch bolts and remove the fork outer tube from the handlebar and fork bridges.

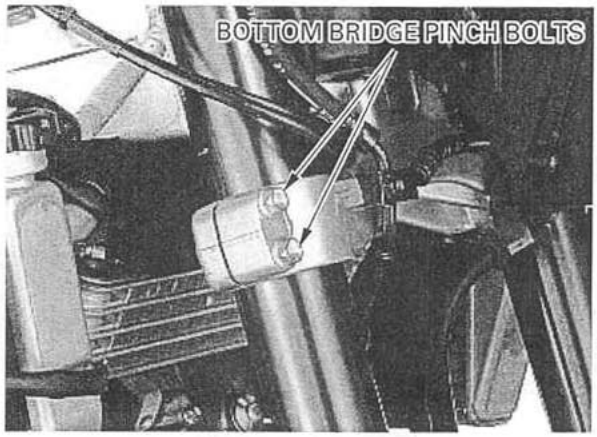

DISASSEMBLY

Remove the stopper ring from the outer tube.
Remove the stopper ring from the damper rod.
Remove the spring pre-load adjuster by turning it counterclockwise.

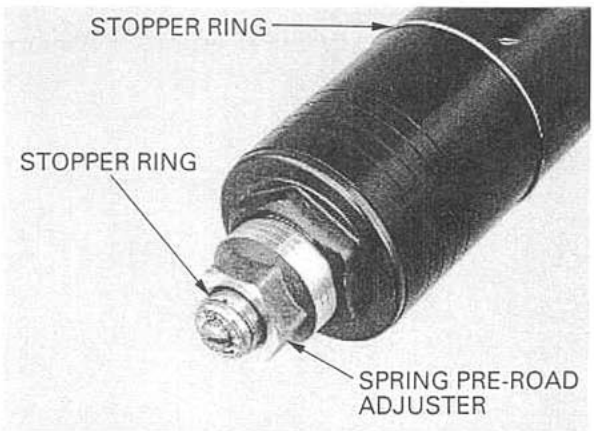

Do not remove the rebound damping adjuster from the damper rod, or the adjuster will damaged.

Hold the outer tube and remove the fork cap.

Slide the outer tube down onto the axle holder of the slide pipe.

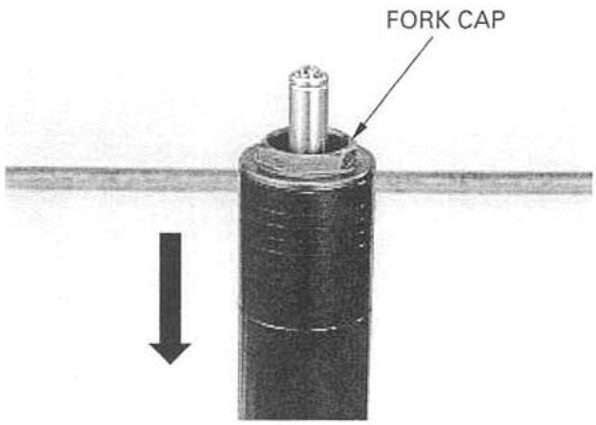

Push the spring collar down, hold the damper rod lock nut with the 17 mm open end wrench and loosen the fork cap.
Remove the fork cap and rubber stopper.

Remove the spring adjuster plate from the fork cap.

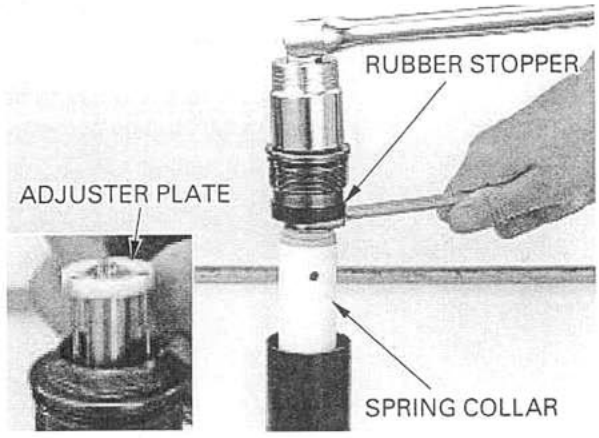

Remove the spring seat, seat stopper and spring collar.

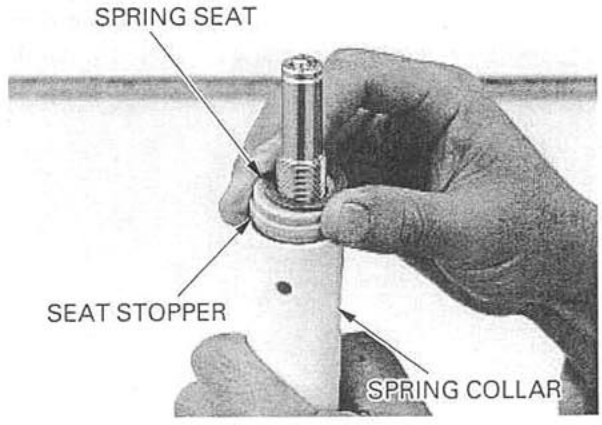

Remove the fork spring.

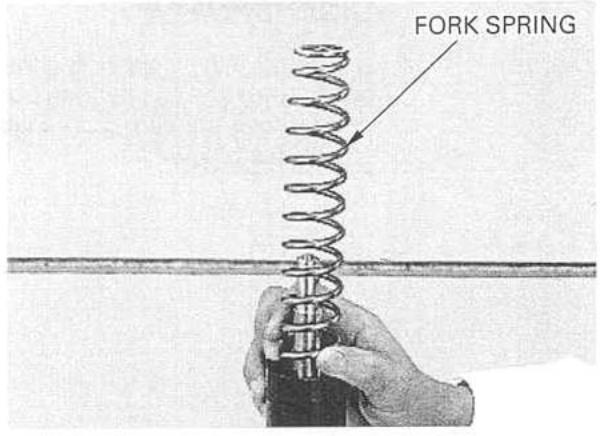

Pour out the fork fluid by pumping the fork damper several times.

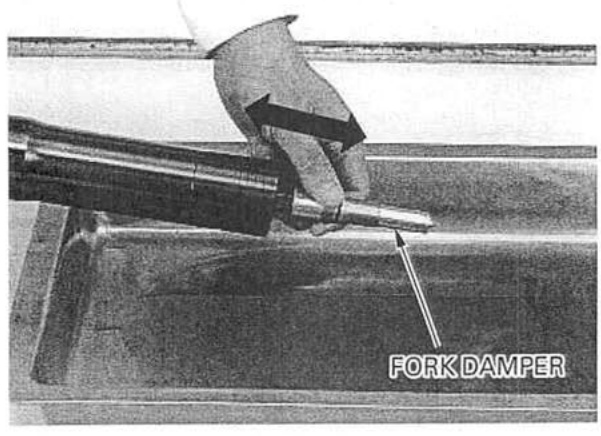

Hold the axle holder of the slide pipe in a vise with soft jaws or a shop towel.
Hold the fork damper with the special tools.

TOOLS:

Fork damper holder	07YMB-MCF0101 or 07YMB-MCFA100 (U.S.A. only)

Remove the axle pinch bolts and fork center bolt.

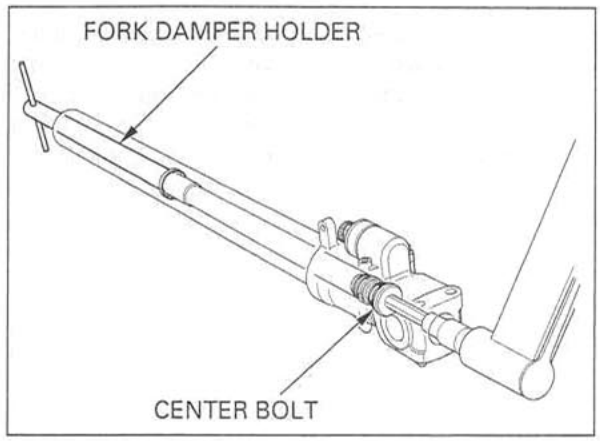

Remove the fork damper and centering plate.

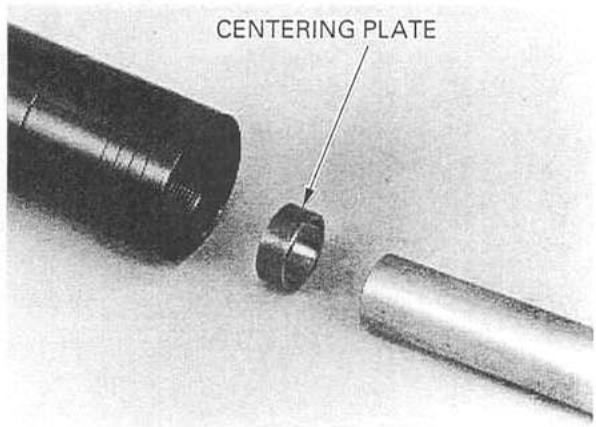

Remove the dust seal and stopper ring from the outer tube, being careful not to scratch the slide pipe sliding surface.

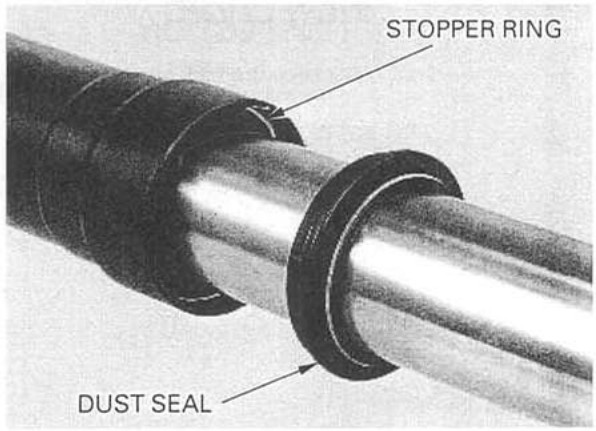

Using quick successive motions, pull the slide pipe out of the outer tube.

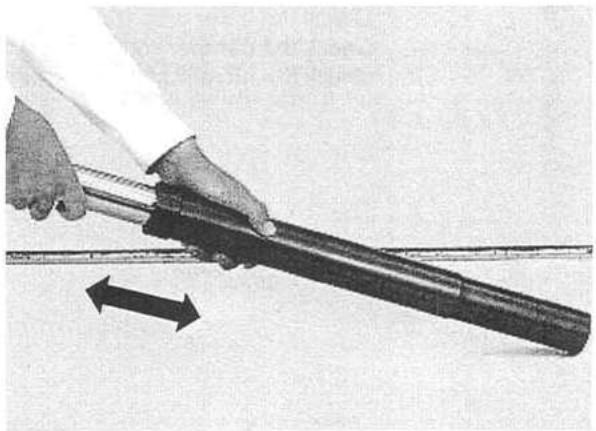

Check the slide pipe for score marks, scratches or abnormal wear.

Set the slide pipe in V-blocks and measure the fork tube runout with a dial indicator.
Actual runout is 1/2 the total indicator reading.

SERVICE LIMIT: 0.20 mm (0.008 in)

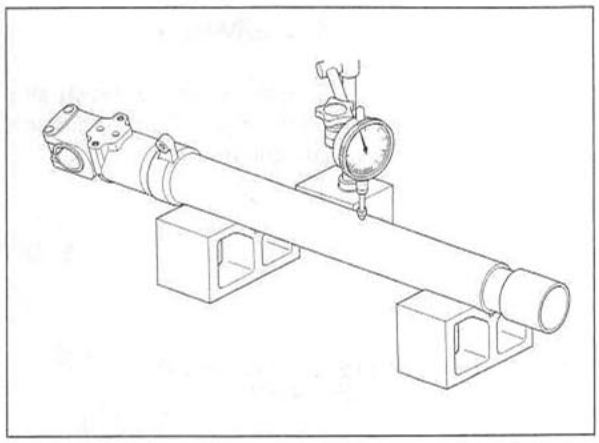

Visually inspect the slider and guide bushings.
Replace the bushings if there is excessive scoring or scratching, or if the teflon is worn so that the copper surface appears on more than 3/4 of the entire surface.

Check the back-up ring; replace it if there is any distortion at the points shown.

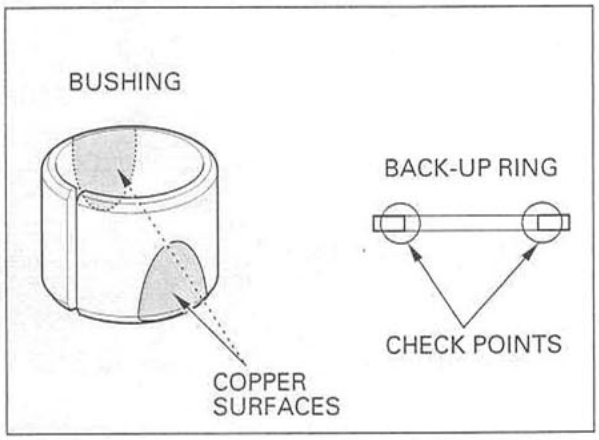

COMPRESSION DAMPING ADJUSTER REPLACEMENT

Remove the two bolts and the compression damping adjuster.

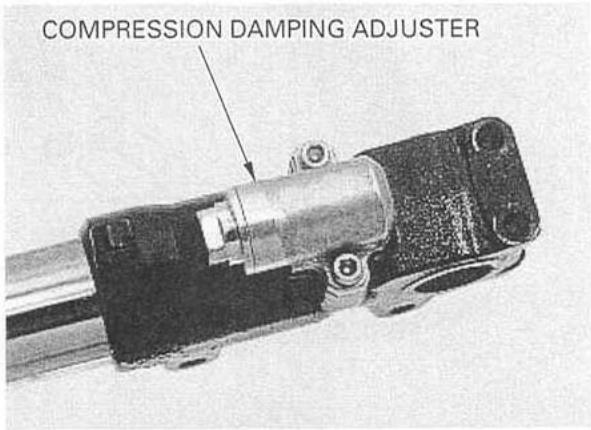

Coat new O-rings with fork fluid and install them onto the adjuster.
Apply locking agent to the bolt threads.
Install the adjuster and tighten the bolts securely.

ADJUSTER POSITION

To set the adjuster to the standard position, turn the adjuster clockwise until it stops, then turn it counterclockwise 12 clicks.

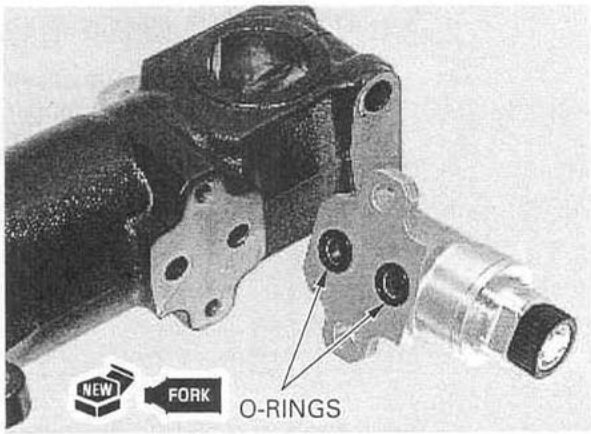

Be careful not to damage the coating of the bushings. Do not open the slider bushing more than necessary.

Install the back-up ring, guide bushing and slider bushing.

Remove the burrs from the slider bushing mating surface, being careful not to peel off the coating.

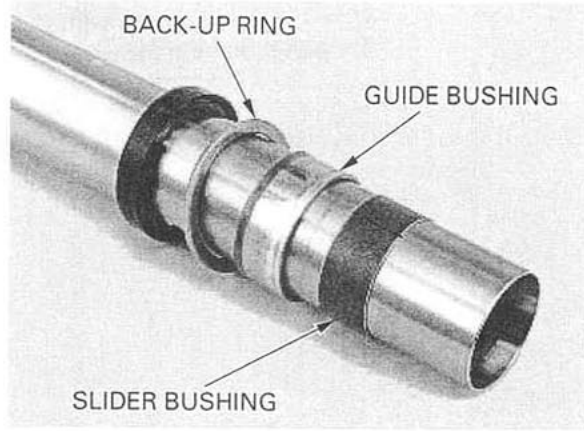

Install the slide pipe in the outer tube.
Drive the guide bushing, back-up ring and oil seal into the outer tube until the stopper ring groove is visible, using the special tool.

TOOL:

Fork seal driver,43 mm	07YMD-MCF0100 or 07KMD-KZ30101 and 07NMD-KZ30101 (except U.S.A.) or 07NMD-KZ3010A (U.S.A. only)

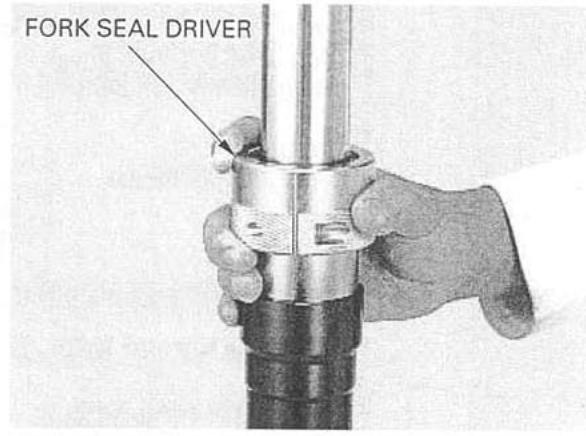

Install the stopper ring into the groove in the outer tube.
Install the dust seal into the outer tube.

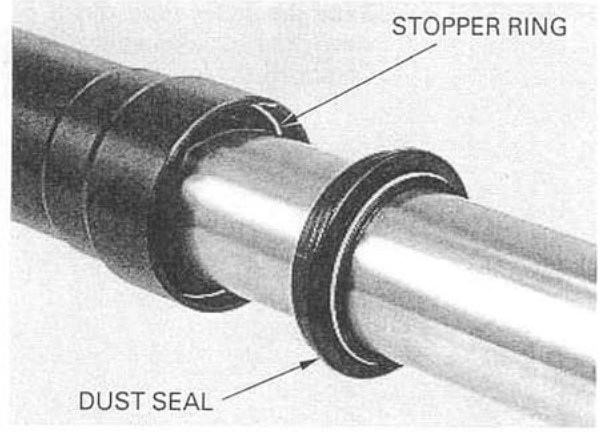

Install the centering plate and fork damper into the slide pipe.

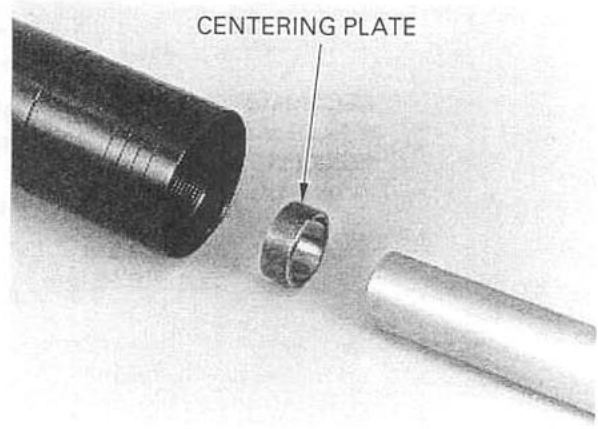

Coat a new O-ring with fork fluid and install it into the center bolt groove.

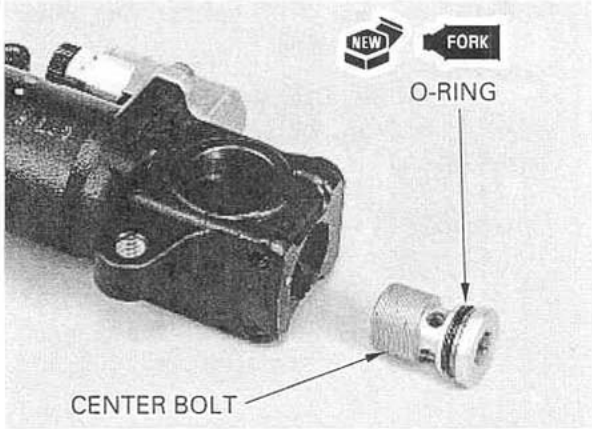

Hold the axle holder of the slide pipe in a vise with soft jaws or a shop towel.
Hold the fork damper with the special tools.

TOOLS:

Fork damper holder	07YMB-MCF0101 or 07YMB-MCFA100 (U.S.A. only)

Install and tighten the fork center bolt.

TORQUE: 34 N·m (3.5 kgf·m , 25 lbf·ft)

Install the axle pinch bolts.

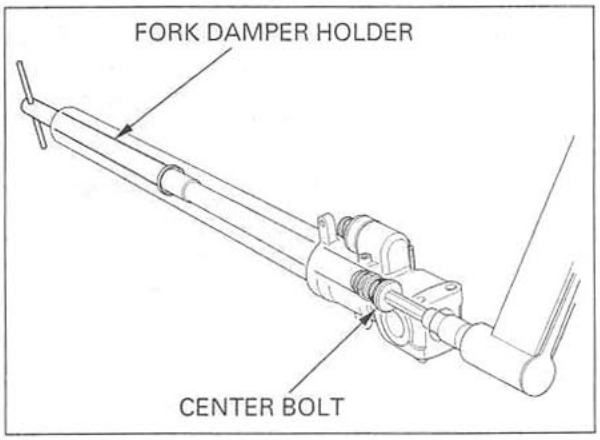

Slide the outer tube down onto the axle holder slowly to avoid damaging the dust seal.
Compress the fork damper fully.

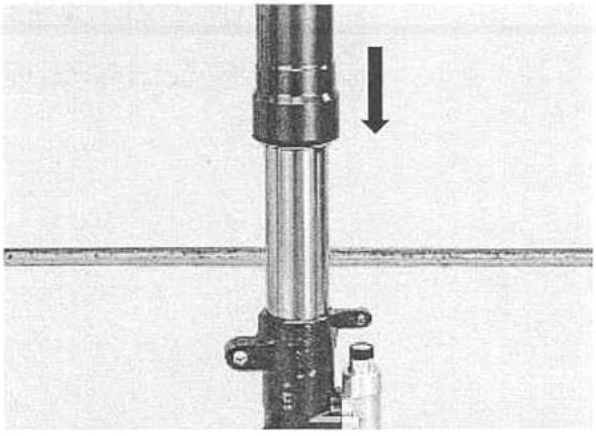

Pour the specified amount of recommended fork fluid in the fork leg.

RECOMMENDED FORK FLUID:
Pro Honda Suspension Fluid SS-8
FORK FLUID CAPACITY:
'00 – '01: 513 ± 2.5 cm³ (17.3 ± 0.08 US oz, 18.1 ± 0.09 Imp oz)
After '01: 498 ± 2.5 cm³ (16.8 ± 0.08 US oz, 17.6 ± 0.09 Imp oz)

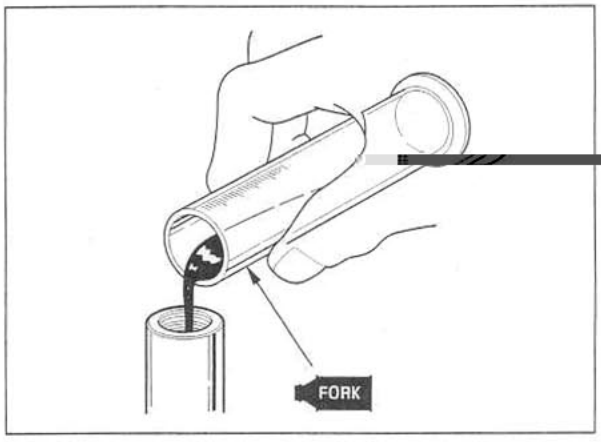

Do not extend the outer tube more than 305 mm (12.0 in) from the axle holder. The fork fluid will spill out of the oil hole in the slide pipe.

Bleed the air from the fork leg as follows:

1. Extend the fork, cover the top of the outer tube with your hand and compress the fork leg slowly.
2. Remove your hand and extend the fork slowly.

Repeat above procedure two or three times.

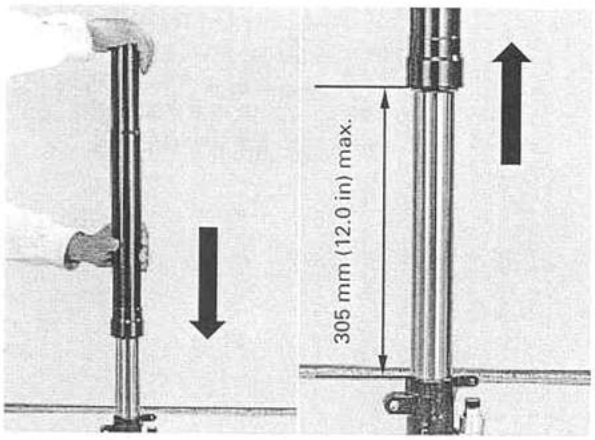

3. Pump the outer tube and damper rod slowly 8–10 times to bleed air.
4. Compress the outer tube and damper rod fully and leave it for 5 minutes.

After the oil level stabilizes, measure the oil level from the top of the outer tube with the outer tube and damper rod fully compressed.

OIL LEVEL: 135 mm (5.3 in)

Adjust the oil level as required.

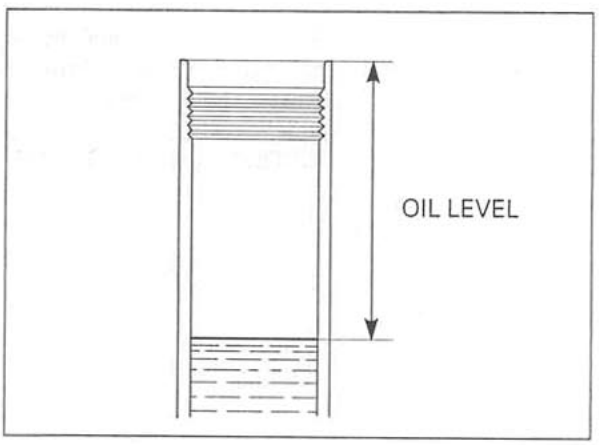

Wipe off any oil from the fork spring and install it into the fork leg with the tapered end facing up.

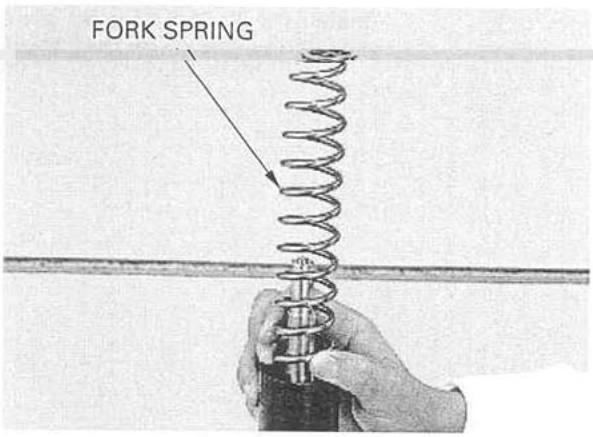

Extend the damper rod fully and install the spring collar, spring seat stopper and spring seat.

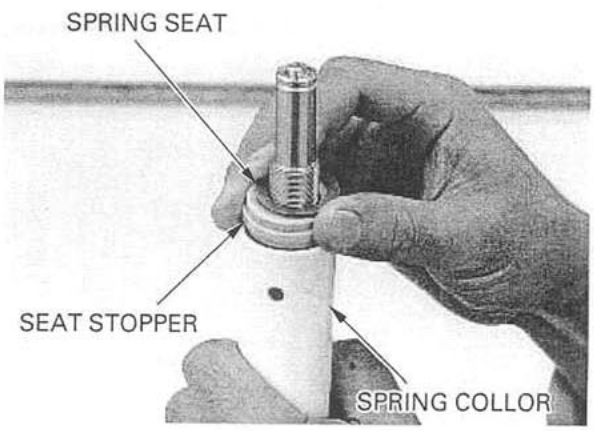

Coat a new O-ring with fork fluid and install it into the fork cap groove.
While holding the damper rod, push the spring collar down and install the rubber stopper and fork cap onto the damper rod.

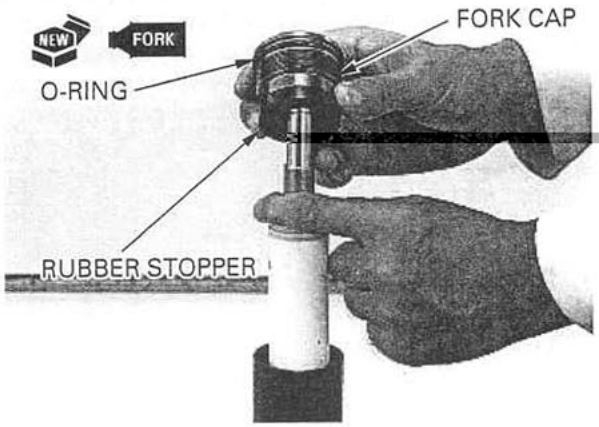

Push the spring collar down, hold the damper rod lock nut with the 17-mm open end wrench and tighten the fork cap.

TORQUE: 34 N·m (3.5 kgf·m , 25 lbf·ft)

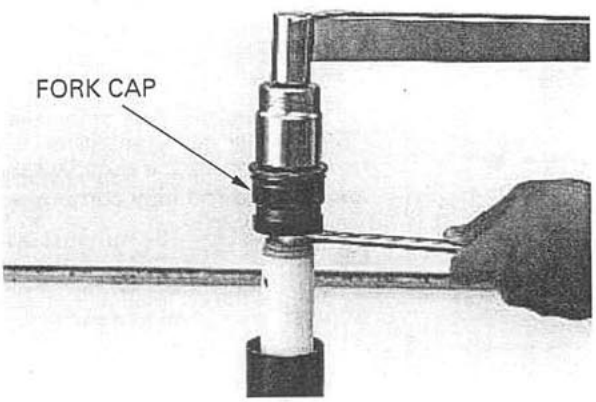

Install the spring adjuster plate into the fork cap, aligning the pins with the holes in the cap.

Tighten the fork cap after installing the fork outer tube into the fork bridges.

Install the fork cap into the outer tube.

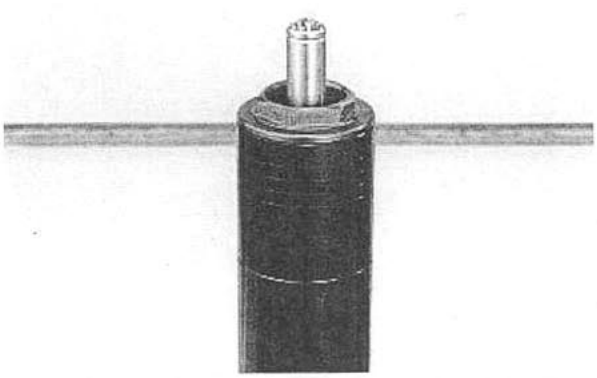

HANDLEBAR

RIGHT HANDLEBAR

REMOVAL

Keep the brake reservoir upright to prevent air from entering the hydraulic system.

Disconnect the front brake light switch connectors. Remove the two bolts, brake master cylinder holder and master cylinder.

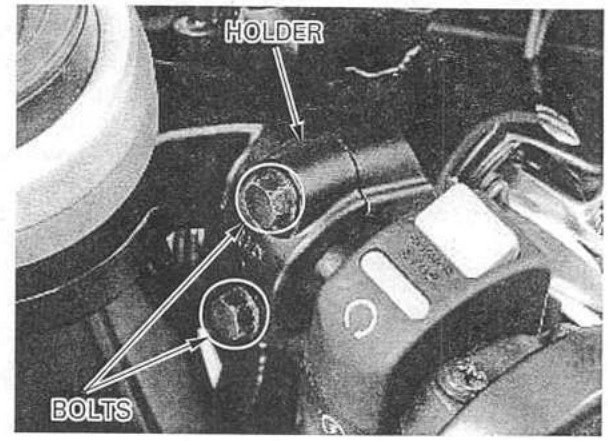

Remove the two screws and right handlebar switch. Remove the two screws and upper throttle housing.

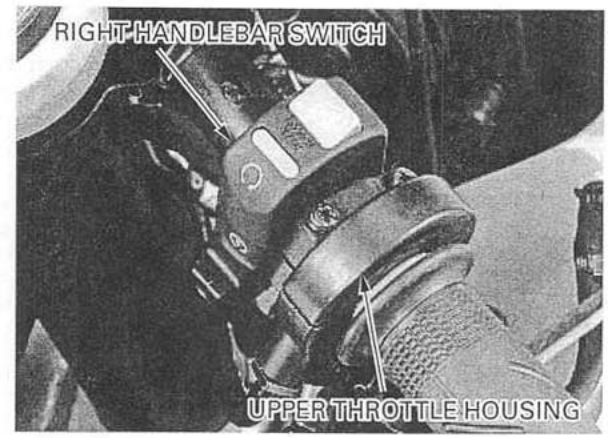

Hold the handlebar weight and remove the mounting screw and weight.

Remove the right fork (page 13-8).

Remove the throttle grip pipe from the right handlebar.

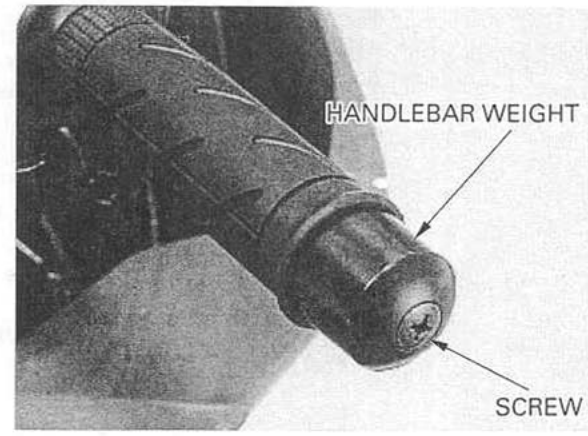

INSTALLATION

Install the throttle grip pipe onto the right handlebar.

Install the right fork (page 13-19).

Install the handlebar weight onto the inner weight, aligning the bosses and grooves each other.
Install a new mounting screw and tighten it while holding the weight.

TORQUE: 10 N·m (1.0 kgf·m , 7 lbf·ft)

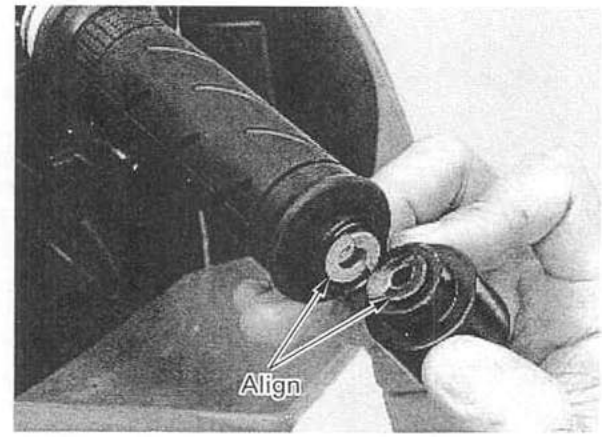

Apply grease to the throttle grip pipe flange.
Install the upper throttle housing over the throttle grip pipe flange, aligning its locating pin with the hole in the handlebar.
Tighten the forward screw first, then the rear screw.

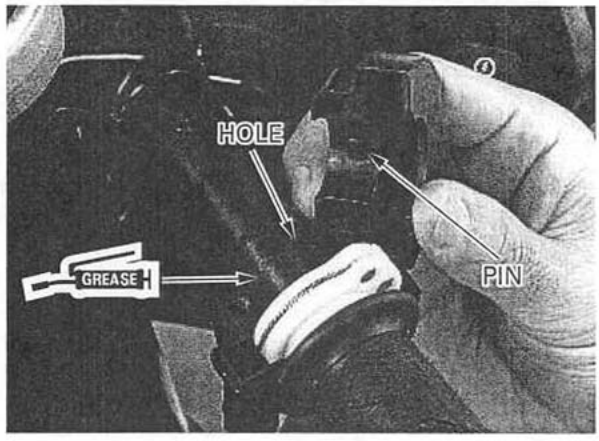

Install the right handlebar switch, aligning its locating pin with the hole in the handlebar.
Tighten the forward screw first, then the rear screw.

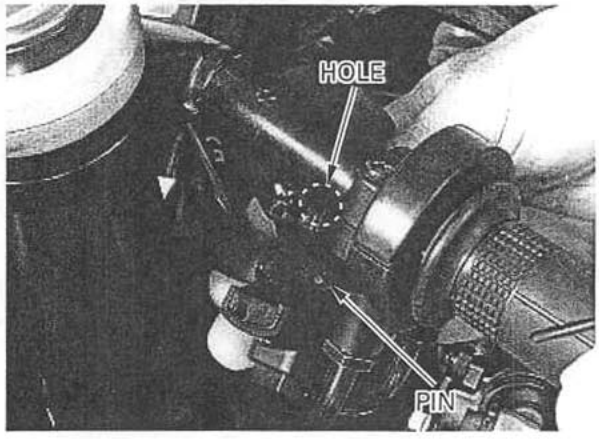

Install the front brake master cylinder and holder with the "UP" mark facing up.
Align the end of the master cylinder with the punch mark on the handlebar, and tighten the upper bolt first, then lower bolt.

TORQUE: 12 N·m (1.2 kgf·m , 9 lbf·ft)

Connect the front brake light switch connectors.

Check the throttle grip operation and free play (page 3-4).

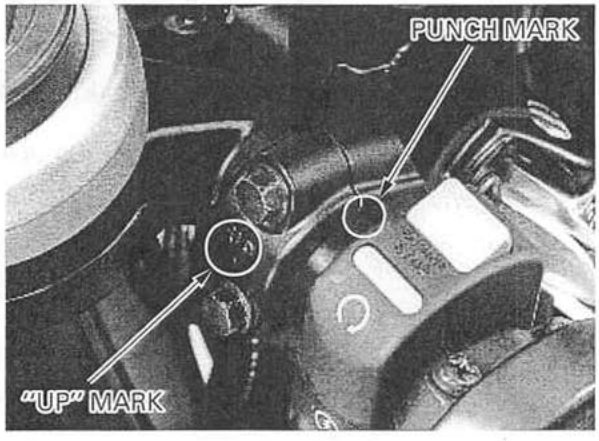

LEFT HANDLEBAR

REMOVAL

Keep the clutch reservoir upright to prevent air from entering the hydraulic system.

Disconnect the clutch switch connectors.
Remove the two bolts, holder and the clutch master cylinder assembly.

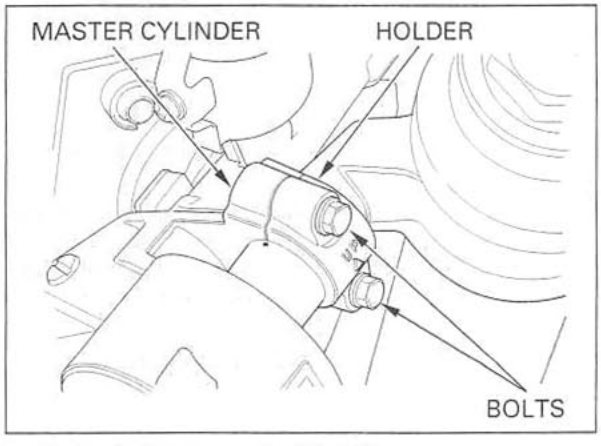

Remove the two screws and left handlebar switch.

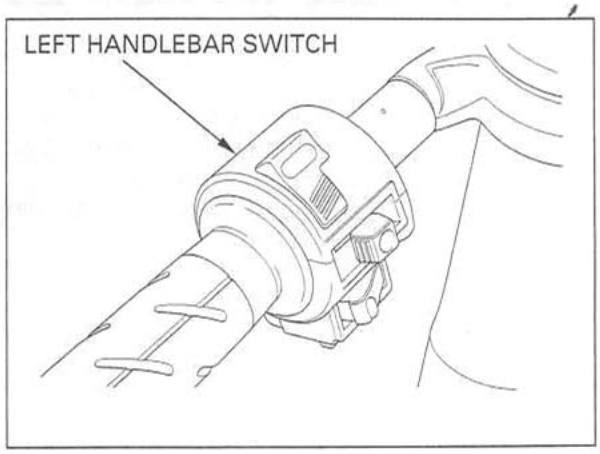

Hold the handlebar weight and remove the mounting screw and the weight.
Remove the left handlebar grip.

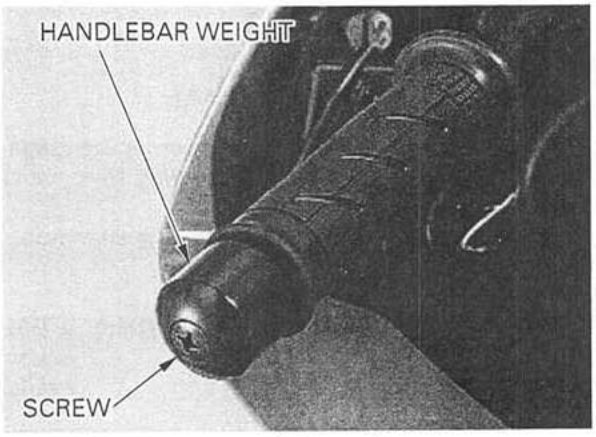

Remove the left fork (page 13-8).

INSTALLATION

Install the left fork (page 13-19).

Apply Honda Bond A, Honda Hand Grip Cement (U.S.A. only) or equivalent to the inside surface of the handlebar grip and to the clean surface of the handlebar. Wait 3—5 minutes and install the grip. Rotate the grip for even application of the adhesive.

NOTE:
- Allow the adhesive to dry for 1 hour before using.

Install the handlebar weight onto the inner weight, aligning the bosses and grooves each other.
Install a new mounting screw and tighten it while holding the weight.

TORQUE: 10 N·m (1.0 kgf·m , 7 lbf·ft)

Install the left handlebar switch, aligning its locating pin with the hole in the handlebar.
Tighten the forward screw first, then the rear screw.

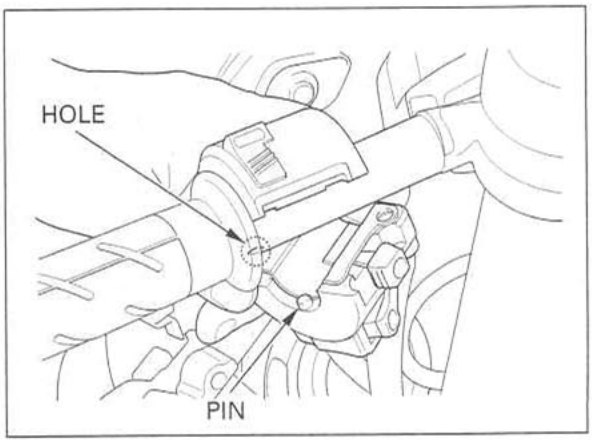

Install the clutch master cylinder and holder with the "UP" mark facing up.
Align the end of the master cylinder with the punch mark on the handlebar, and tighten the upper bolt first, then lower bolt.
Connect the clutch switch connectors.

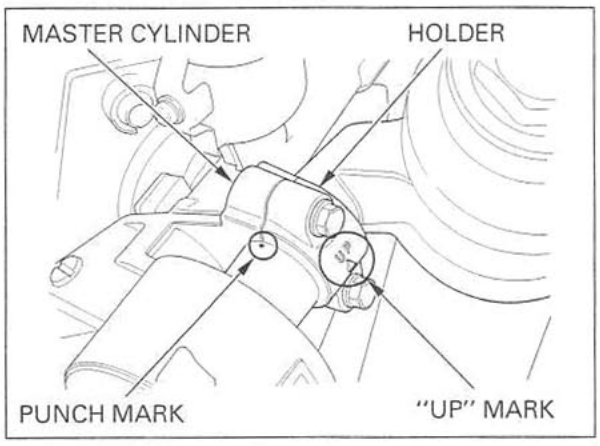

STEERING STEM

REMOVAL

Remove the upper fairing (page 2-5).
After '01: Remove the steering stem nut cap.

Remove the steering stem nut.

TOOL (After '01):
Socket wrench, 39×41mm 07GMA-KS40100 or equivalent commercially available in U.S.A.

Remove the left and right forks (page 13-8).

Remove the fork top bridge.

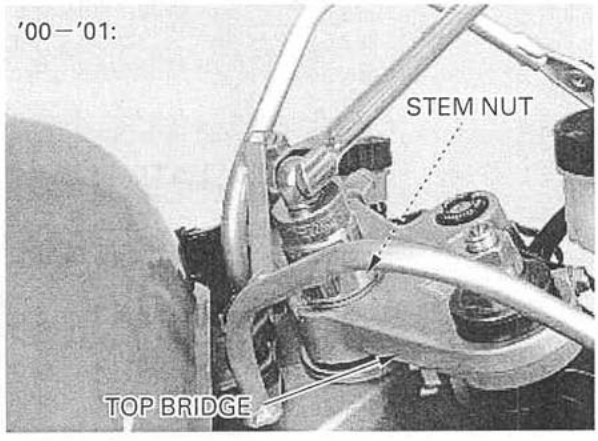

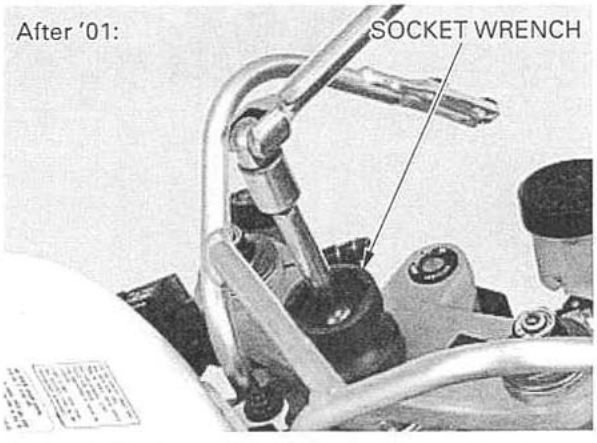

Remove the dust seal.

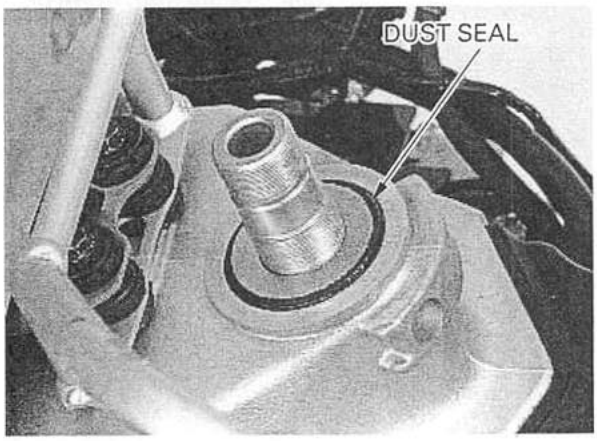

Remove the upper bearing inner race, steering stem, upper and lower steering bearings.

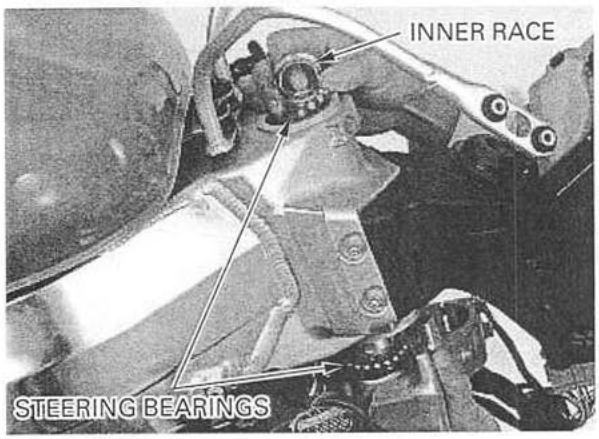

STEERING BEARING REPLACEMENT

Except U.S.A.:

Always replace the bearings and races as a set.

Replace the steering bearing outer races using the following special tools:

TOOLS:

Driver attachment A (1)	07946-KM90100 ('00–'01)
Driver attachment B (2)	07NMF-MT70120 (After '01: two required)
Driver shaft assembly (3)	07946-KM90300
Race remover A (4)	07946-KM90401 ('00–'01)
Race remover B (5)	07NMF-MT70110
Assembly base (6)	07946-KM90600

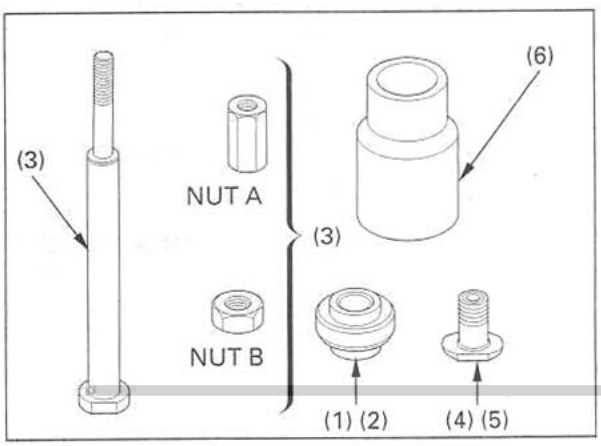

Note the installation direction of the assembly base.

Install the special tools into the steering head pipe as shown.
Align bearing remover A (After '01: B) with the grooves in the steering head.
Lightly tighten nut B.
While holding the driver shaft, turn nut A gradually to remove the upper bearing outer race.

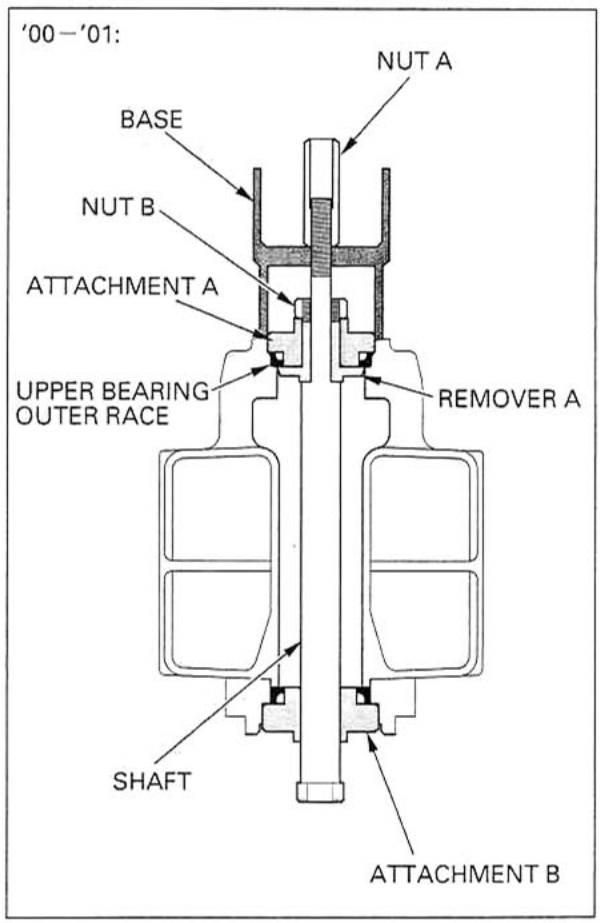

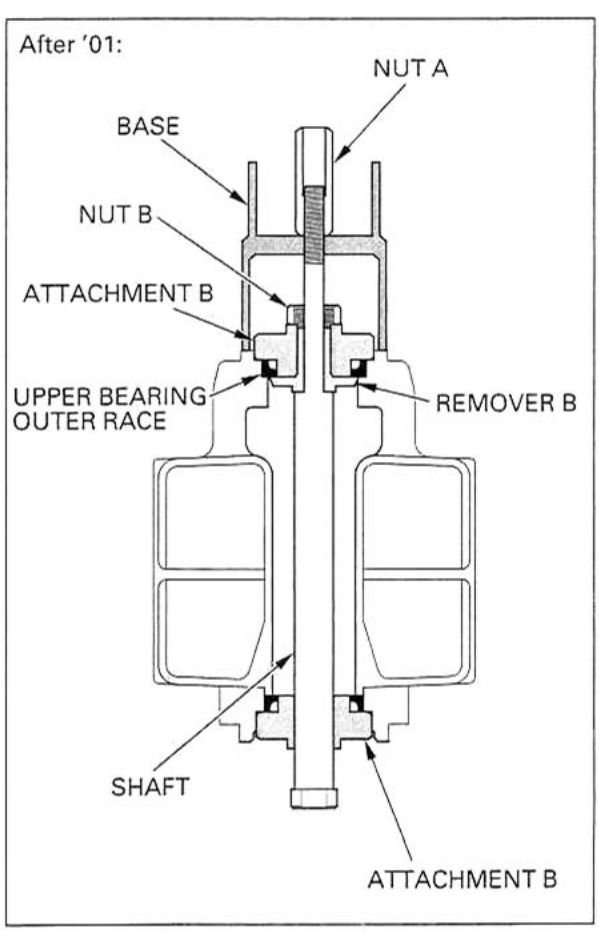

Note the installation direction of the assembly base.

Install the special tools into the steering head pipe as shown.
Align bearing remover B with the groove in the steering head.
Lightly tighten nut B.
While holding the driver shaft, turn nut A gradually to remove the lower bearing outer race.

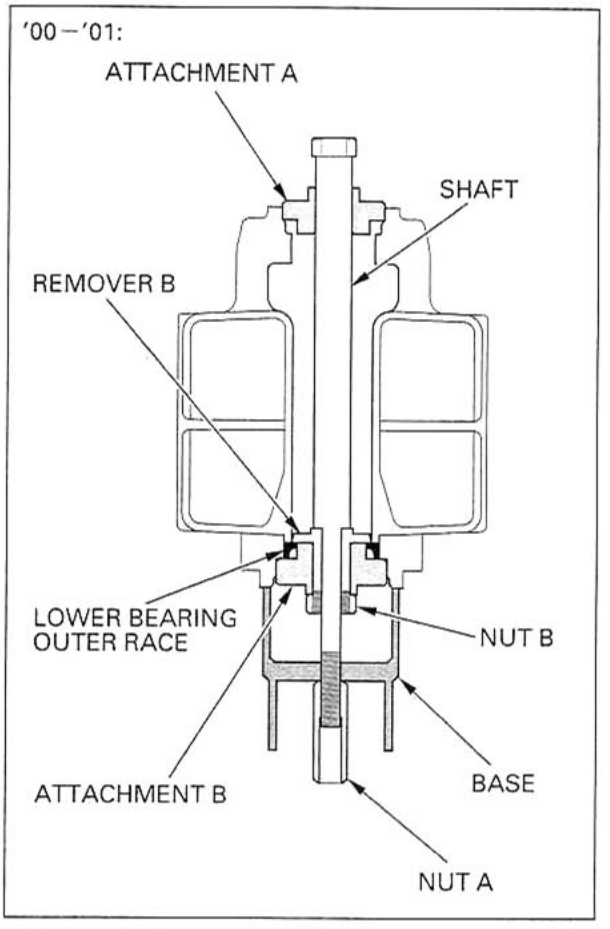

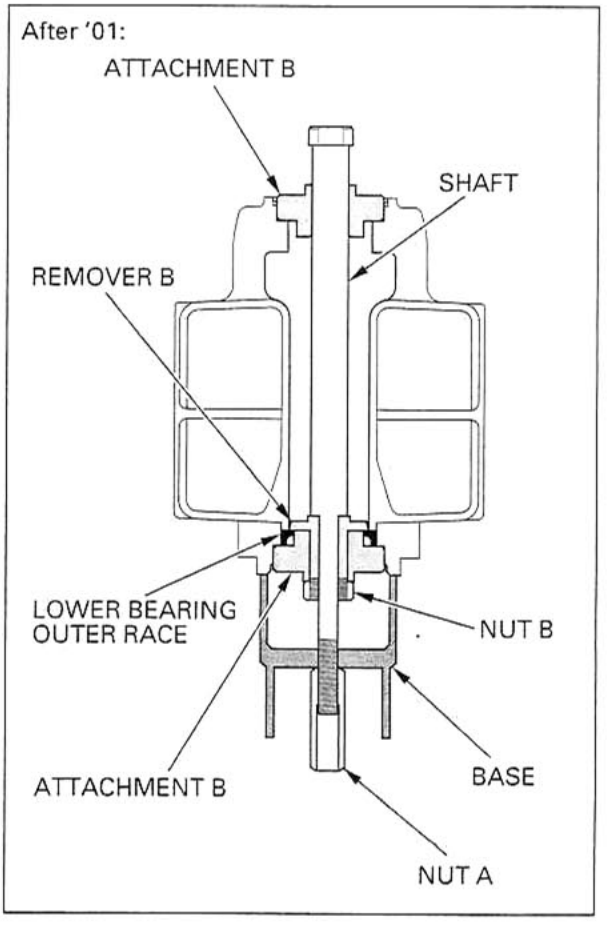

Install a new upper bearing outer race and the special tools as shown.
While holding the driver shaft, turn nut A gradually until the outer race bottoms on the steering head pipe.

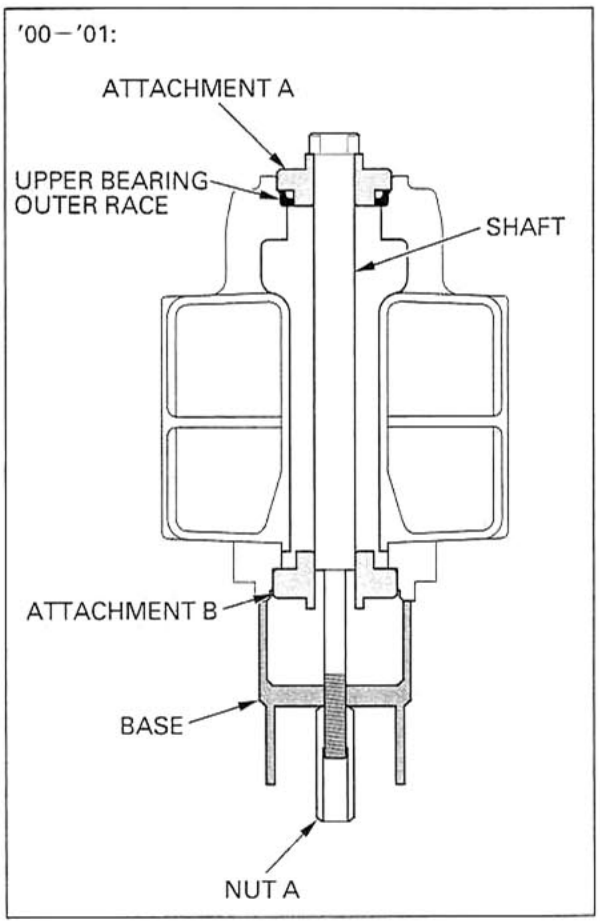

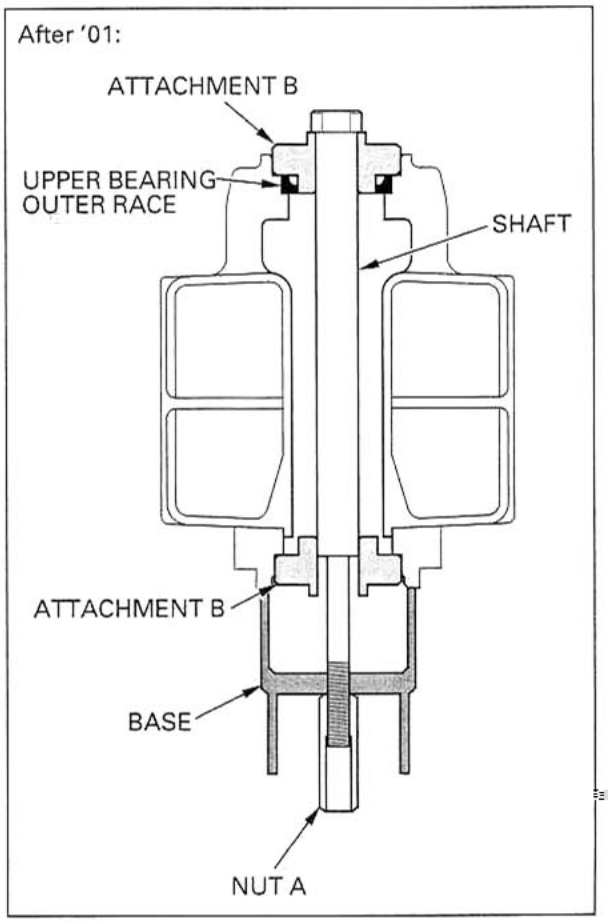

Install a new lower bearing outer race and the special tools as shown.
While holding the driver shaft, turn nut A gradually until the outer race bottoms on the steering head pipe.

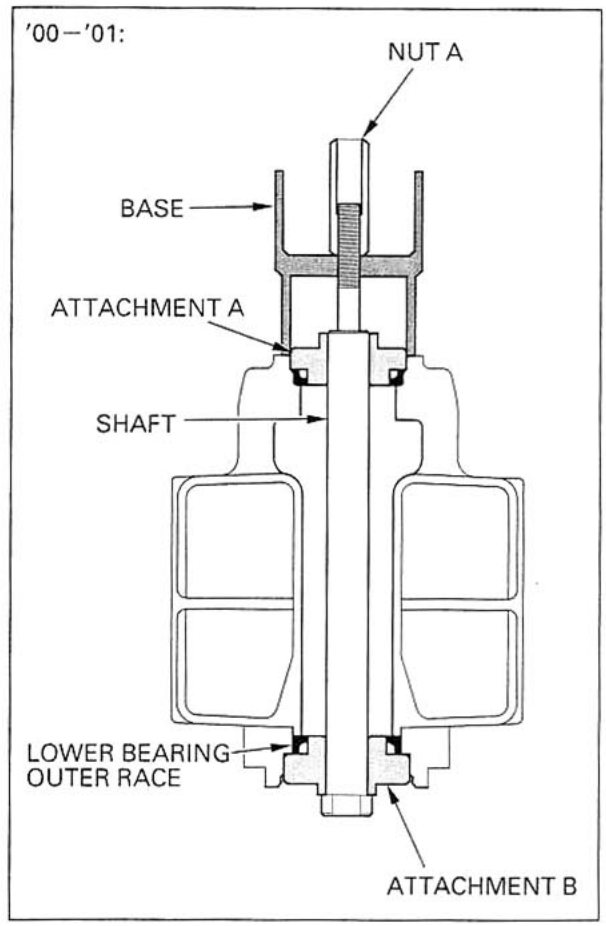

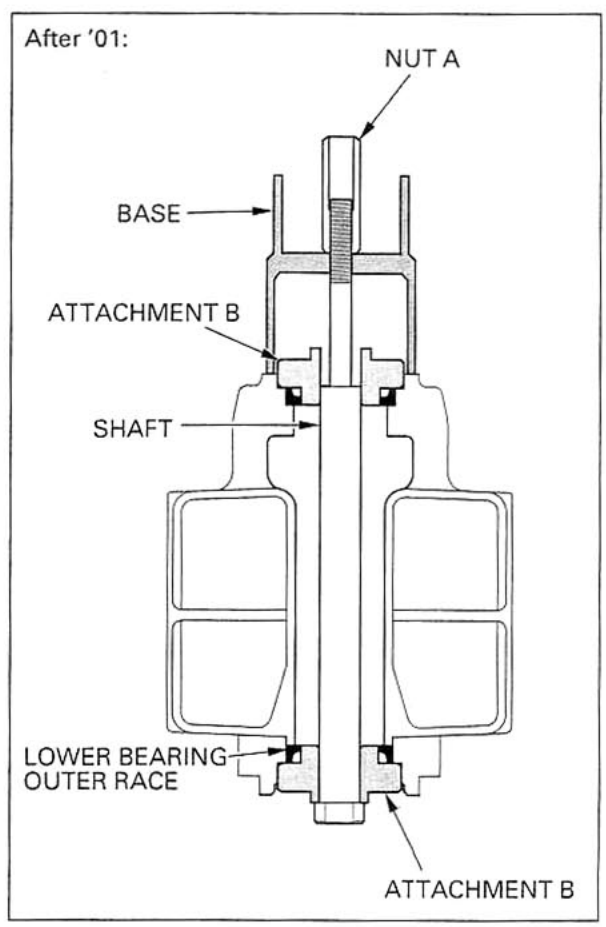

Always replace the bearings and races as a set.

U.S.A. only:
Replace the steering bearing outer races using the special tools listed below.

TOOLS:

Main bearing driver attachment	07946-ME90200
Fork seal driver weight	07947-KA50100
Oil seal driver	07965-MA60000
Installer shaft	07VMF-KZ30200
Installer attachment A	07VMF-MAT0100 ('00 – '01)
Installer attachment B	07VMF-MAT0200 (After '01: two required)
Remover attachment A	07VMF-MAT0300 ('00 – '01)
Remover attachment B	07VMF-MAT0400

Install the special tools into the steering head pipe as shown.
Align remover attachment A with the groove in the steering head.
While holding the installer shaft with the wrench, turn the upper nut gradually to remove the upper bearing outer race.

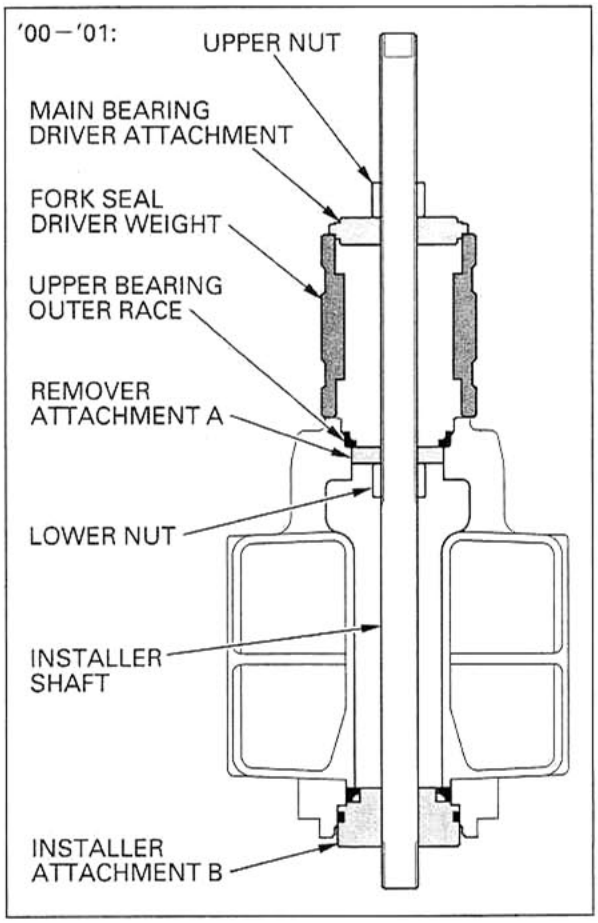

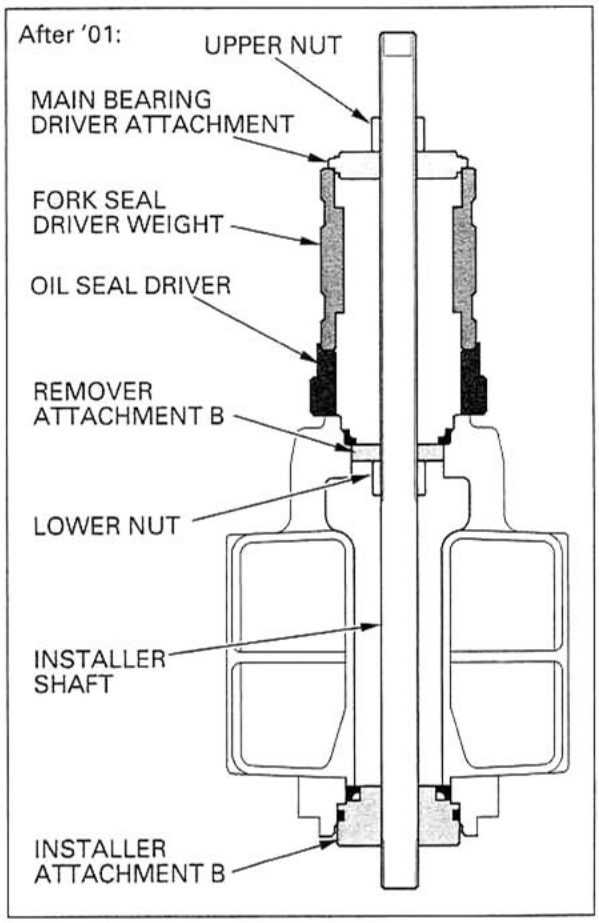

Install the special tools into the steering head pipe as shown.
Align remover attachment B with the groove in the steering head.
While holding the installer shaft with the wrench, turn the lower nut gradually to remove the lower bearing outer race.

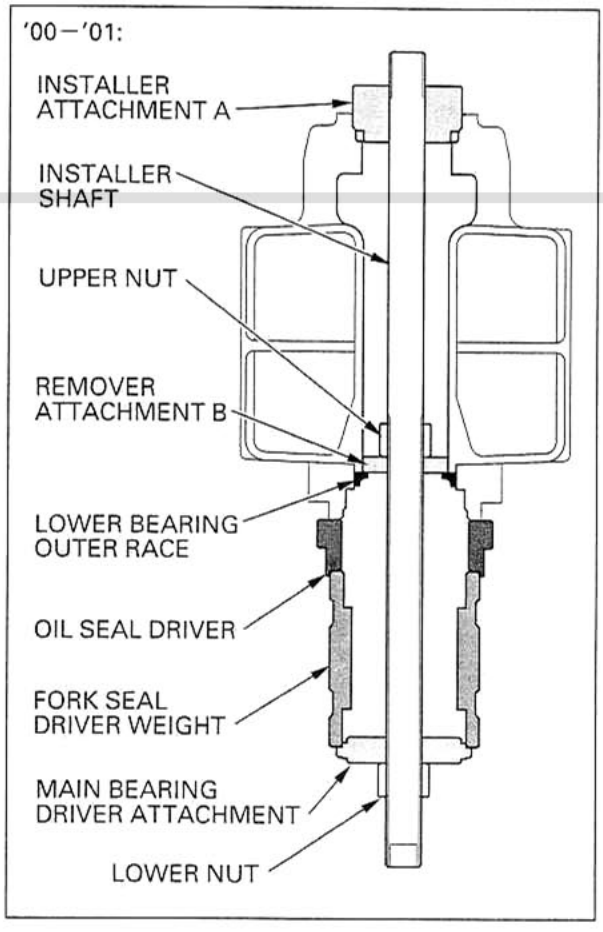

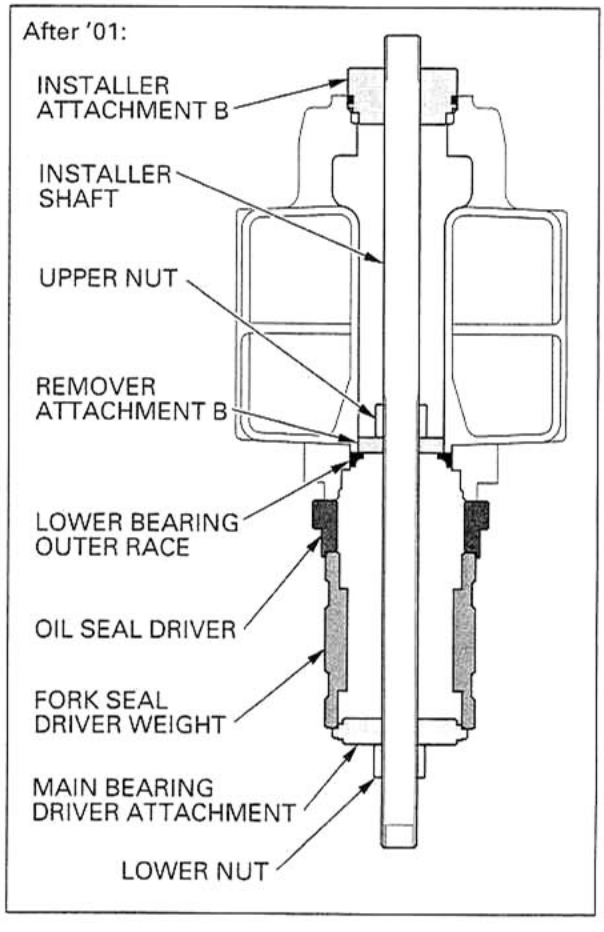

Install a new upper bearing outer race and the special tools as shown.
While holding the installer shaft with the wrench, turn the lower nut gradually until the groove in installer attachment A aligns with the upper end of the steering head. This will allow you to install the upper bearing outer race.

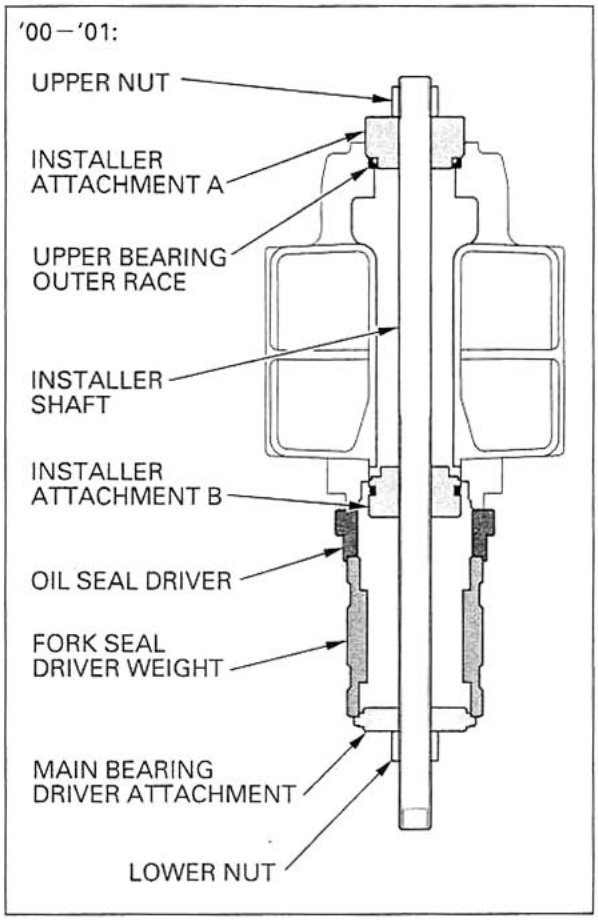

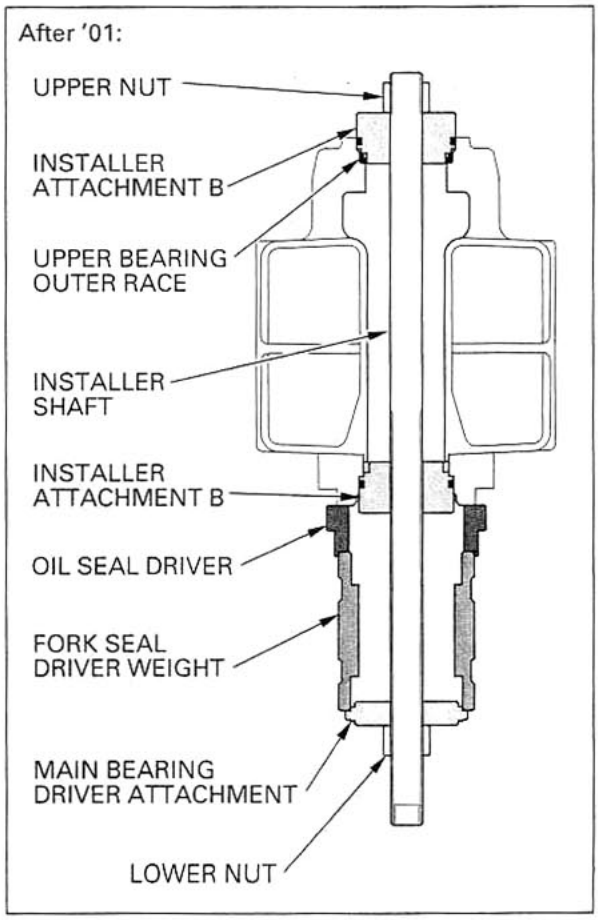

Install a new lower bearing outer race and the special tools as shown.
While holding the installer shaft with the wrench, turn the upper nut gradually until the groove in installer attachment B aligns with the lower end of the steering head. This will allow you to install the lower bearing outer race.

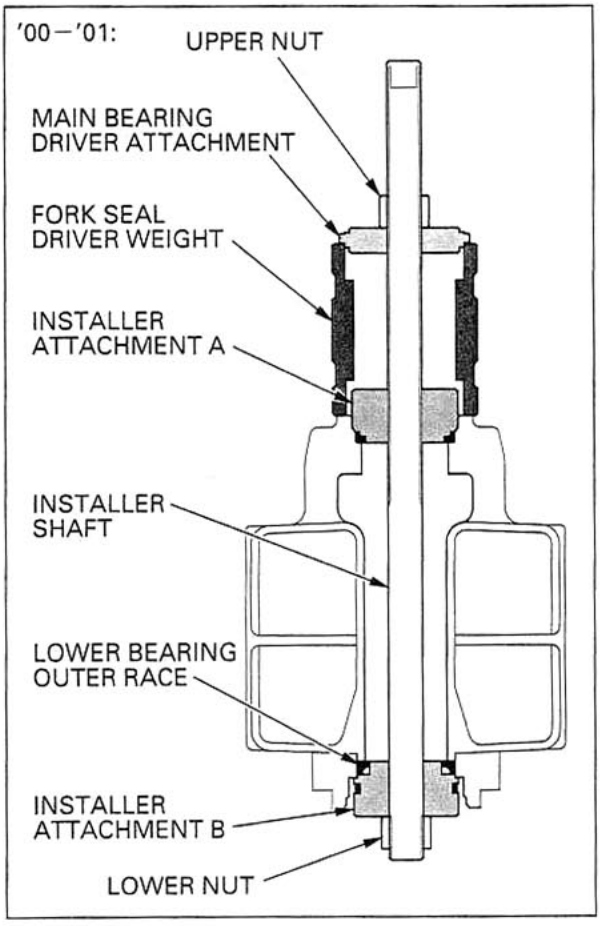

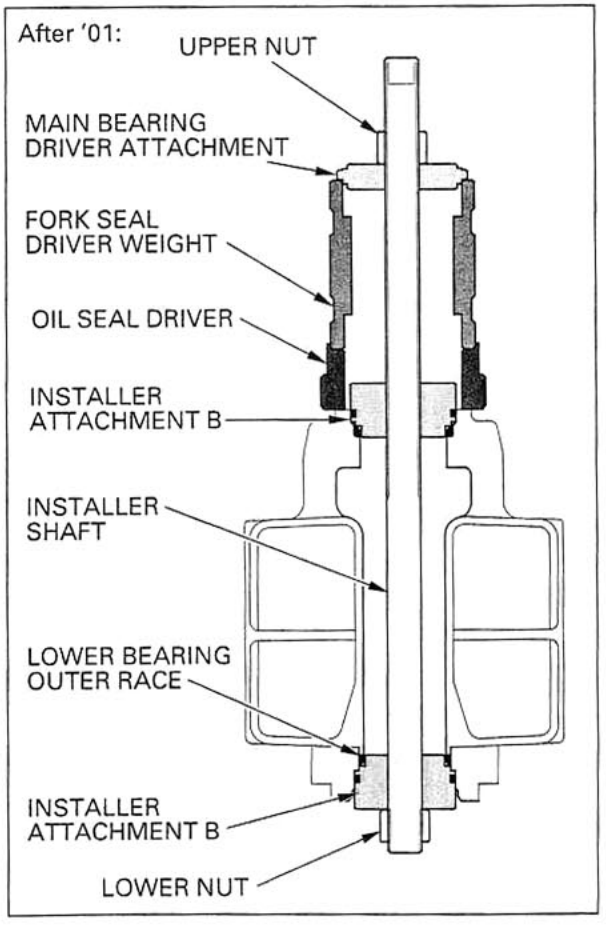

Install the stem nut onto the stem to prevent the threads from being damaged when removing the lower bearing inner race from the stem.
Remove the lower bearing inner race with a chisel or equivalent tool, being careful not to damage the stem.
Remove the dust seal.

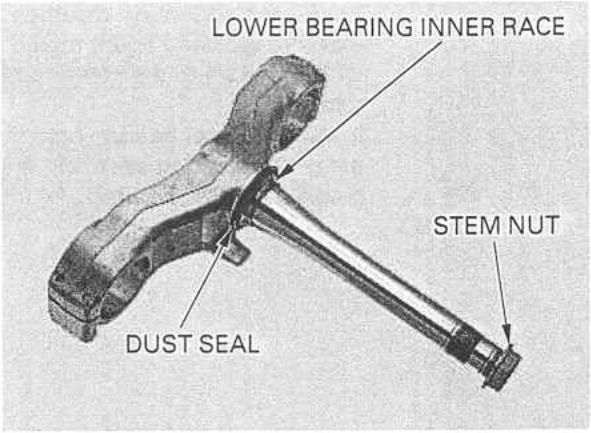

Apply molybdenum disulfide grease to a new dust seal lip and install it onto the steering stem.
Press a new lower bearing inner race onto the steering stem using the special tool.

TOOL:
Attachment, 35 mm I.D. 07746-0030400

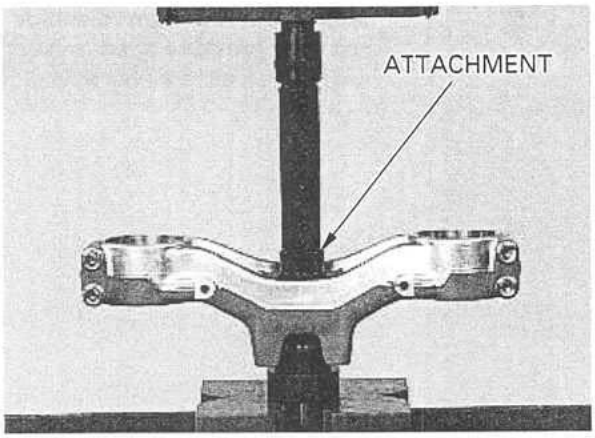

INSTALLATION

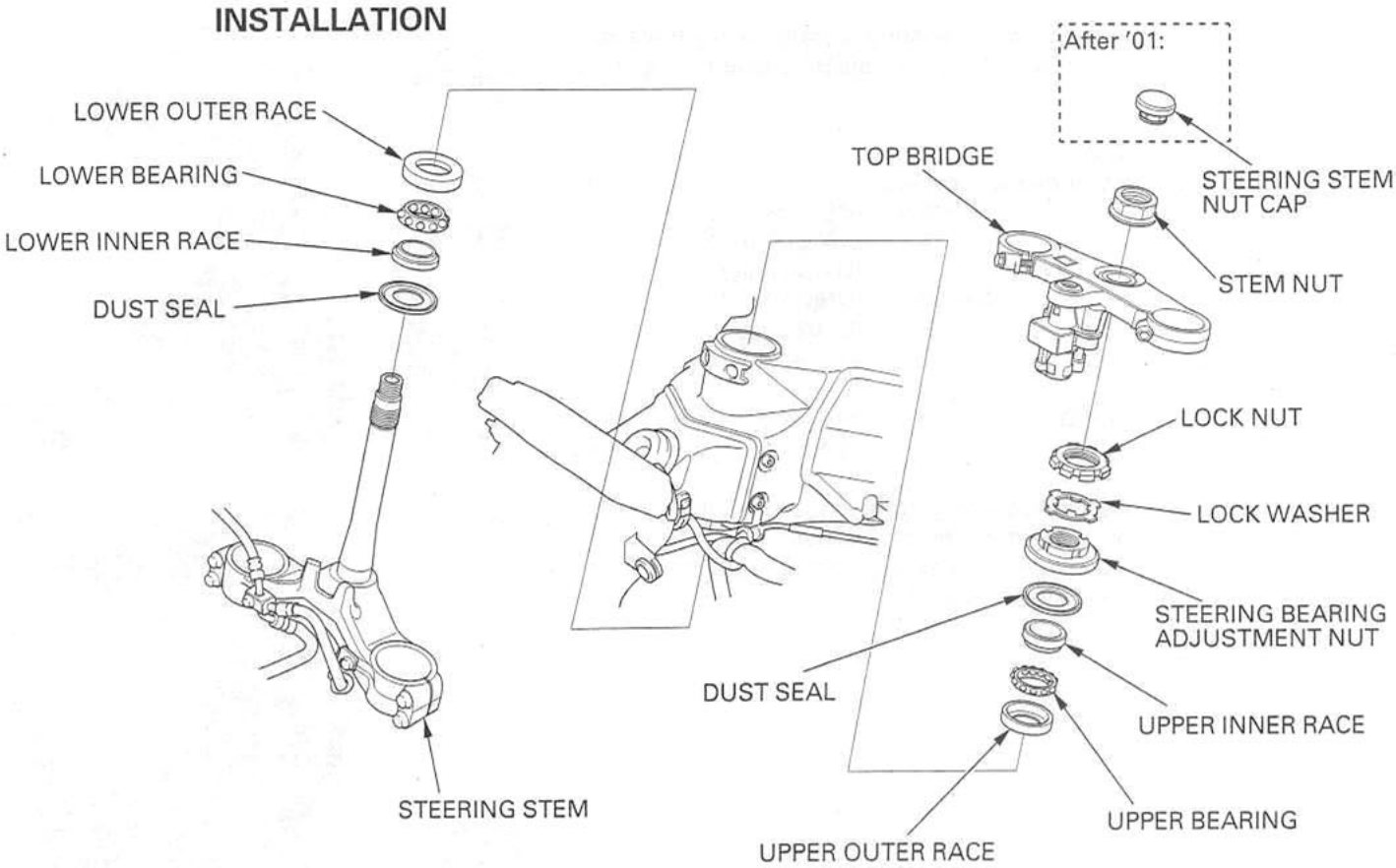

Apply molybdenum disulfide grease (After '01: extreme pressure agent mixed with water resistant UREA grease) to the steering bearings and bearing races.
Install the lower bearing onto the steering stem.
Install the steering stem into the steering head pipe.
Install the upper bearing and inner race.

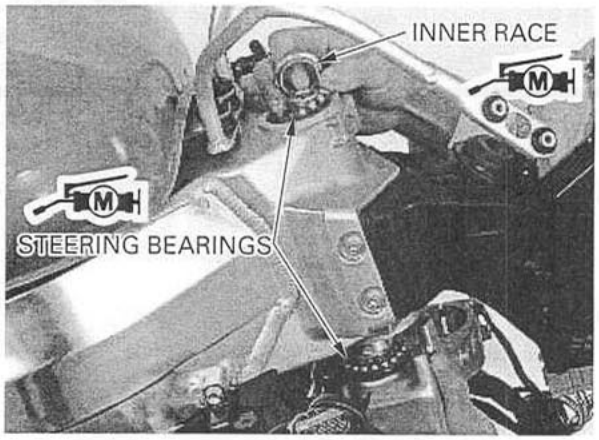

Apply molybdenum disulfide grease (After '01: extreme pressure agent mixed with water resistant UREA grease) to a new dust seal lip and install it.

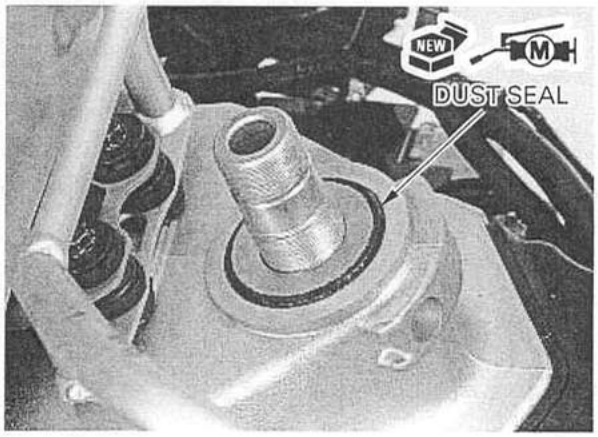

Apply oil to the bearing adjustment nut threads.
Install and tighten the steering bearing adjustment nut.

TOOL:
Steering stem socket

('00 – '01)	07916-3710101 or 07916-3710100 (U.S.A. only)
(After '01)	07HMA-MR70100 or 07702-0020001 (U.S.A. only)

TORQUE: '00 – '01: 32 N·m (3.3 kgf·m , 24 lbf·ft)
After '01: 52 N·m (5.3 kgf·m , 38 lbf·ft)

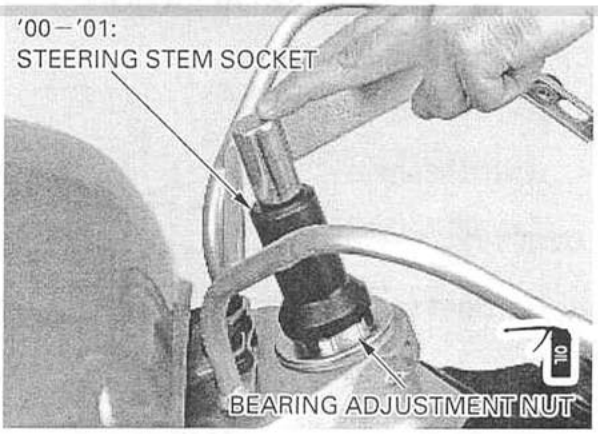

Turn the steering stem right and left, lock-to-lock at least five times to seat the bearings.
Retighten the steering bearing adjustment nut to the same torque.

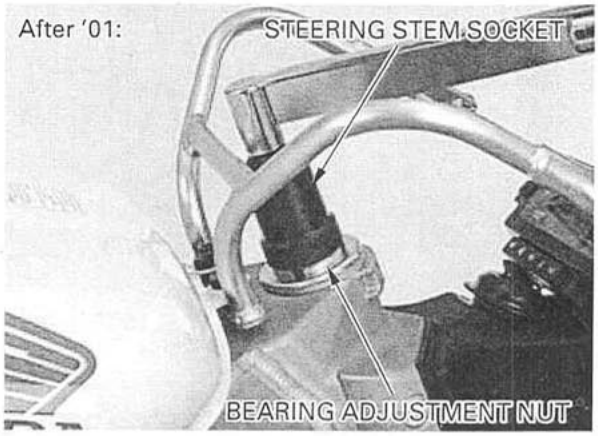

Install a new lock washer and bend the two opposite tabs down into the grooves in the adjustment nut.
Install and finger tighten the lock nut all the way.
Hold the steering bearing adjustment nut and further tighten the lock nut, within 90 degrees, to align its grooves with the tabs of the lock washer.
Bend up the lock washer tabs into the grooves of the lock nut.

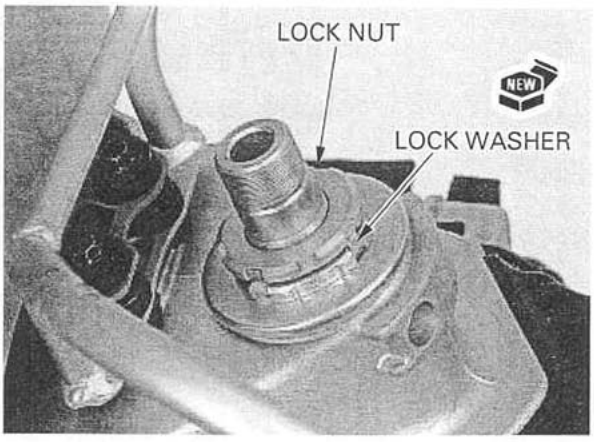

Install the fork top bridge and steering stem nut.
Temporarily install the forks into the fork bridges.
Tighten the steering stem nut.

TOOL (After '01):
Socket wrench, 39×41mm 07GMA-KS40100 or equivalent commercially available in U.S.A.

TORQUE:
'00–'01: 103 N·m (10.5 kgf·m , 76 lbf·ft)
After'01: 137 N·m (14.0 kgf·m , 101 lbf·ft)

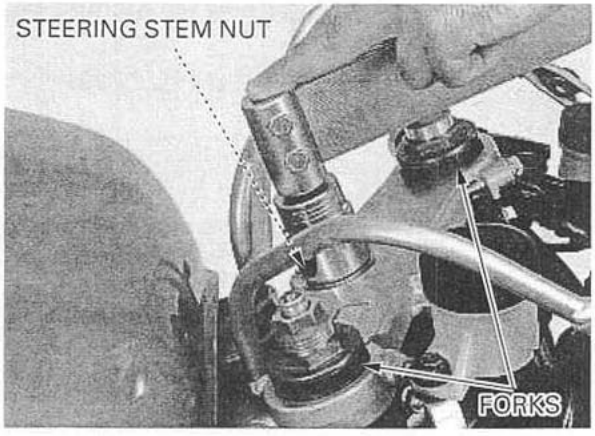

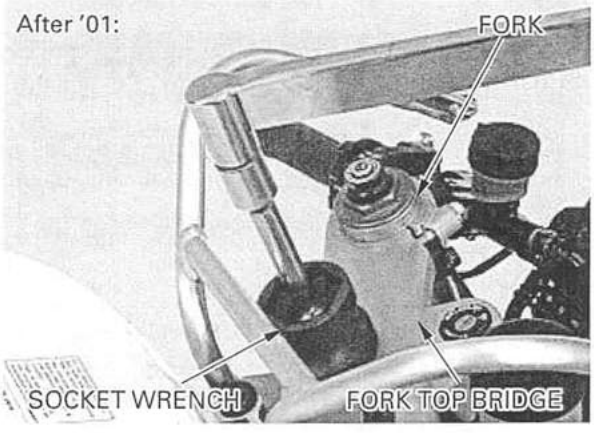

After '01: Install the steering stem nut cap.
Remove the forks.
Make sure that the steering stem moves smoothly, without play or binding.

Install the front brake hose 3-way joint and clamp, and tighten the bolts.

TORQUE: 10 N·m (1.0 kgf·m , 7 lbf·ft)

Install the forks (page 13-19).
Install the upper fairing (page 2-5).

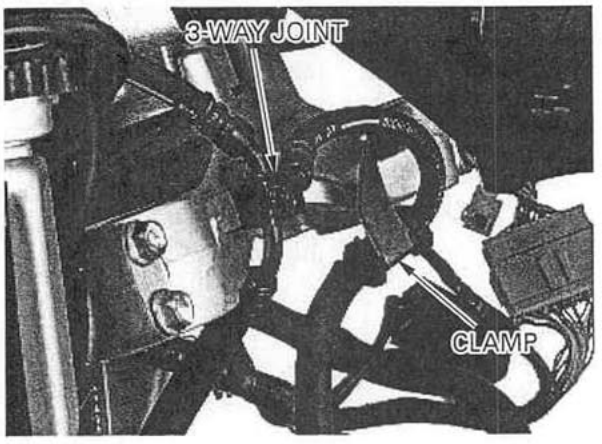

STEERING BEARING PRELOAD

Remove the upper fairing (page 2-5).

Support the motorcycle securely using safety stands or a hoist and raise the front wheel off the ground.
Position the steering stem straight ahead.
Hook a spring scale to the fork tube between the fork top and bottom bridges.
Make sure there is no cable, wire harness or hose interference.
Pull the spring scale keeping it at a right angle to the steering stem.
Read the scale at the point where the steering stem just starts to move.

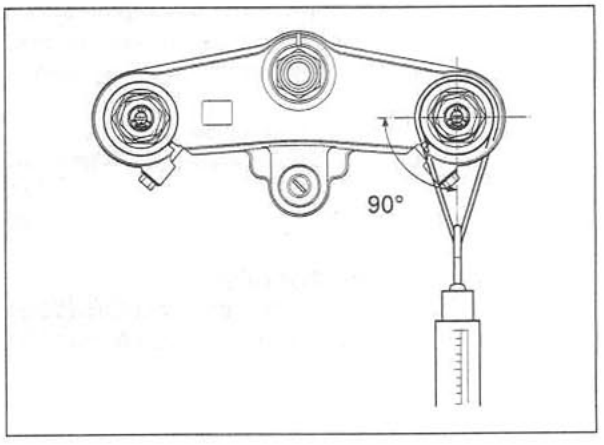

STEERING BEARING PRELOAD:
1.4—2.1 kgf (3.1—4.6 lbf)

If the readings do not fall within the limits, readjust the steering bearing adjustment nut.

Install the upper fairing (page 2-5).

14. REAR WHEEL/SUSPENSION

After '01:

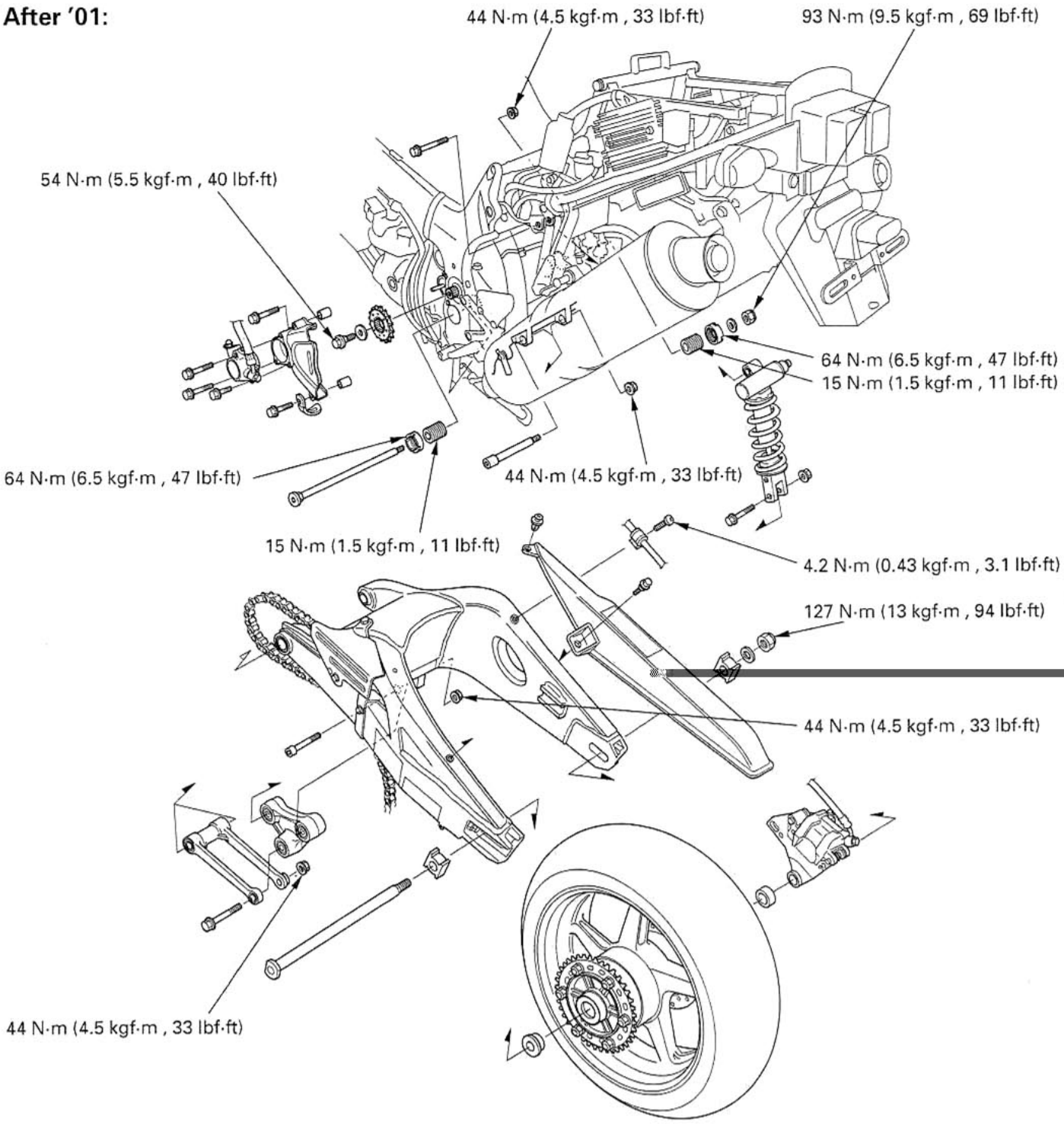

'00 – '01:

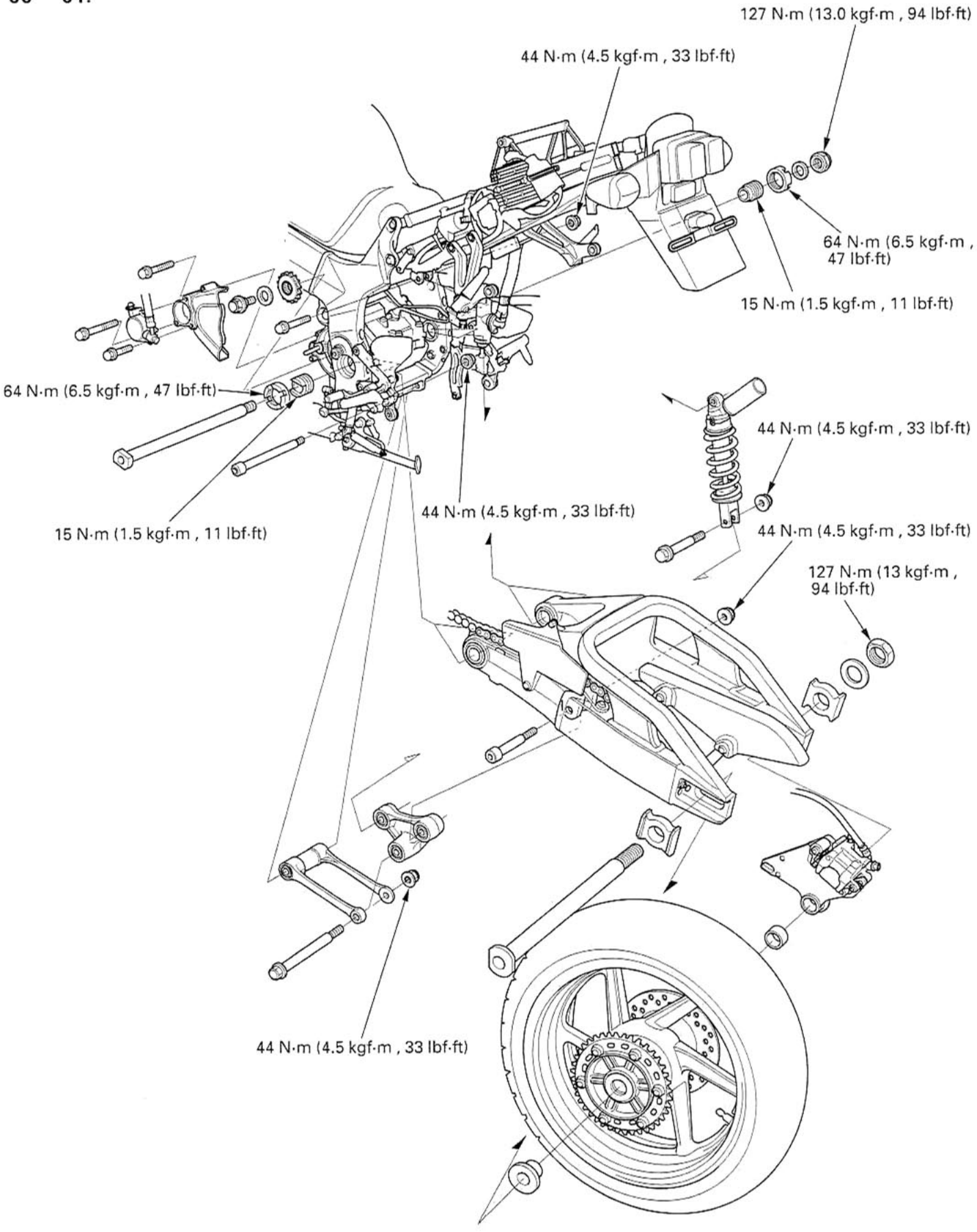
127 N·m (13.0 kgf·m , 94 lbf·ft)
44 N·m (4.5 kgf·m , 33 lbf·ft)
64 N·m (6.5 kgf·m , 47 lbf·ft)
15 N·m (1.5 kgf·m , 11 lbf·ft)
64 N·m (6.5 kgf·m , 47 lbf·ft)
44 N·m (4.5 kgf·m , 33 lbf·ft)
15 N·m (1.5 kgf·m , 11 lbf·ft)
44 N·m (4.5 kgf·m , 33 lbf·ft)
44 N·m (4.5 kgf·m , 33 lbf·ft)
127 N·m (13 kgf·m , 94 lbf·ft)
44 N·m (4.5 kgf·m , 33 lbf·ft)

SERVICE INFORMATION

GENERAL

- A hoist or equivalent is required to support the motorcycle when servicing the rear wheel and suspension.
- The shock absorber contains nitrogen gas under high pressure. Do not allow fire or heat near the shock absorber.
- Before disposal of the shock absorber, release the nitrogen.
- The damper unit is filled with nitrogen gas under high pressure, do not try to disassemble.
- Use genuine Honda replacement bolts and nuts for all suspension pivots and mounting points.
- When using the lock nut wrench for the adjusting bolt lock nut, use a 20-inch long deflecting beam type torque wrench. The lock nut wrench increases the torque wrench's leverage, so the torque wrench reading will be less than the torque actually applied to the lock nut. The specification given is the actual torque applied to the lock nut, not the reading on the torque wrench. Do not overtighten the lock nut. The specification later in the text gives both actual and indicated.
- Refer to section 15 for brake system service.

SPECIFICATIONS

Unit: mm (in)

ITEM		STANDARD	SERVICE LIMIT
Minimum tire tread depth		———	2.0 (0.08)
Cold tire pressure	Up to 90 kg (200 lbs) load	290 kPa (2.90 kgf/cm², 42 psi)	———
	Up to maximum weight capacity	290 kPa (2.90 kgf/cm², 42 psi)	———
Axle runout		———	0.20 (0.008)
Wheel rim runout	Radial	———	2.0 (0.08)
	Axial	———	2.0 (0.08)
Wheel balance weight		———	60 g (2.1 oz)max.

TORQUE VALUES

Rear axle nut		127 N·m (13 kgf·m , 94 lbf·ft)	
Rear brake disc bolt		42 N·m (4.3 kgf·m , 31 lbf·ft)	ALOC bolt : replace with a new one
Final driven sprocket nut		64 N·m (6.5 kgf·m , 47 lbf·ft)	
Shock absorber upper mounting nut		44 N·m (4.5 kgf·m , 33 lbf·ft)	U-nut
Shock absorber lower mounting nut		44 N·m (4.5 kgf·m , 33 lbf·ft)	U-nut
Shock arm-to-swingarm nut		44 N·m (4.5 kgf·m , 33 lbf·ft)	U-nut
Shock arm-to-shock link nut		44 N·m (4.5 kgf·m , 33 lbf·ft)	U-nut
Shock link-to-frame nut		44 N·m (4.5 kgf·m , 33 lbf·ft)	U-nut
Swingarm pivot adjusting bolt		15 N·m (1.5 kgf·m , 11 lbf·ft)	
Swingarm pivot adjusting bolt lock nut		64 N·m (6.5 kgf·m , 47 lbf·ft)	
Swingarm pivot nut	('00—'01)	127 N·m (13.0 kgf·m , 94 lbf·ft)	U-nut
	(After '01)	93 N·m (9.5 kgf·m , 69 lbf·ft)	U-nut
Drive chain slider bolt		9 N·m (0.9 kgf·m , 6.5 lbf·ft)	Apply locking agent to the threads.
Rear brake hose clamp bolt	('00—'01)	12 N·m (1.2 kgf·m , 9 lbf·ft)	Apply locking agent to the threads.
Rear brake hose clamp screw	(After '01)	4.2 N·m (0.43 kgf·m , 3.1 lbf·ft)	
Center engine hanger bolt		64 N·m (6.5 kgf·m , 47 lbf·ft)	
Front engine hanger nut		64 N·m (6.5 kgf·m , 47 lbf·ft)	
Rear upper engine hanger nut		64 N·m (6.5 kgf·m , 47 lbf·ft)	
Rear lower engine hanger nut		39 N·m (4.0 kgf·m , 29 lbf·ft)	

TOOLS

Bearing remover shaft	07746-0050100	
Bearing remover head, 25 mm	07746-0050800	
Driver	07749-0010000	
Attachment, 42 × 47 mm	07746-0010300	
Pilot, 25 mm	07746-0040600	
Attachment, 52 × 55 mm	07746-0010400	
Driver	07949-3710001	
Attachment, 22 × 24 mm	07746-0010800	
Pilot, 17 mm	07746-0040400	
Pilot, 20 mm (After '01)	07746-0040500	
Pilot, 28 mm (After '01)	07746-0041100	
Attachment, 24 × 26 mm	07746-0010700	
Bearing remover, 17 mm	07936-3710300	
Remover handle	07936-3710100	
Remover weight	07741-0010201	or 07936-371020A or 07936-3710200 (U.S.A. only)
Attachment, 32 × 35 mm (After '01)	07746-0010100	
Attachment, 37 × 40 mm	07746-0010200	
Attachment, 40 × 42 mm ('00–'01)	07746-0010900	
Attachment, 28 × 30 mm (After '01)	07946-1870100	
Pilot, 32 mm ('00–'01)	07MAD-PR90200	
Lock nut wrench, 5.8 × 46 mm	07YMA-MCF0100	or 07YMA-MCFA100 (U.S.A. only)
Fork rod holder ('00–'01)	07930-KA50100	

TROUBLESHOOTING

Soft suspension
- Weak shock absorber spring
- Incorrect suspension adjustment
- Oil leakage from damper unit
- Insufficient tire pressure

Hard suspension
- Incorrect suspension adjustment
- Damaged rear suspension pivot bearings
- Bent damper rod
- Tire pressure too high

Rear wheel wobbling
- Bent rim
- Worn or damaged rear wheel bearings
- Faulty rear tire
- Unbalanced rear tire and wheel
- Insufficient rear tire pressure
- Faulty swingarm pivot bearings

Rear wheel turns hard
- Faulty rear wheel bearings
- Bent rear axle
- Rear brake drag
- Drive chain too tight

Rear suspension noise
- Faulty rear shock absorber
- Loose rear suspension fasteners
- Worn rear suspension pivot bearings

REAR WHEEL

REMOVAL

Loosen the drive chain adjusting bolt lock nuts and bolts.
Loosen the rear axle nut.
Raise the rear wheel off the ground and support the motorcycle securely with a hoist or equivalent.
Remove the rear axle nut and washer.

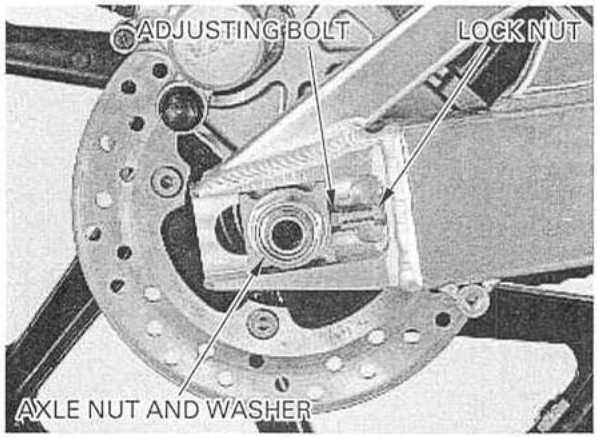

Push the rear wheel forward and remove the drive chain from the final driven sprocket.

Do not operate the brake pedal after removing the rear wheel.

Remove the rear axle and the rear wheel.

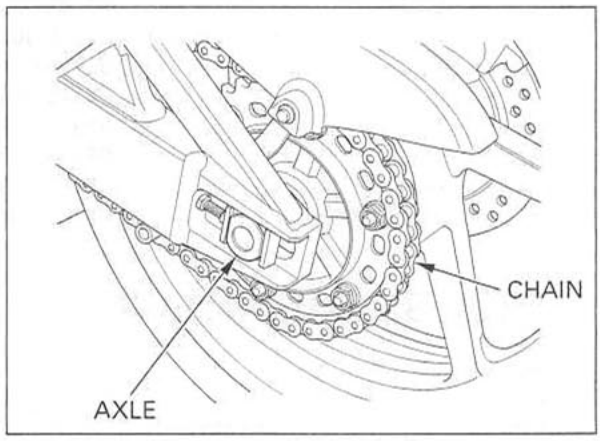

Remove the side collars.

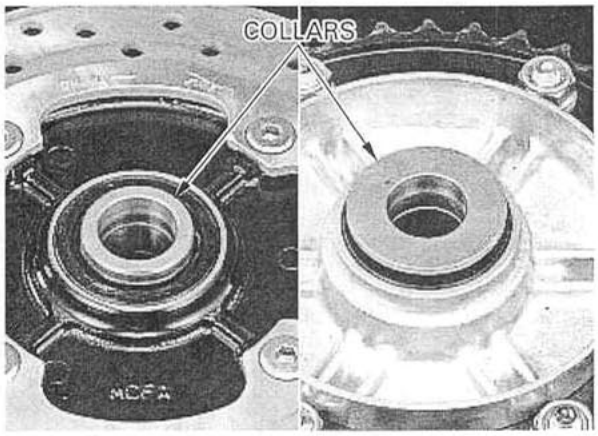

INSPECTION

AXLE

Place the axle in V-blocks and measure the runout. Actual runout is 1/2 the total indicator reading.

SERVICE LIMIT: 0.20 mm (0.008 in)

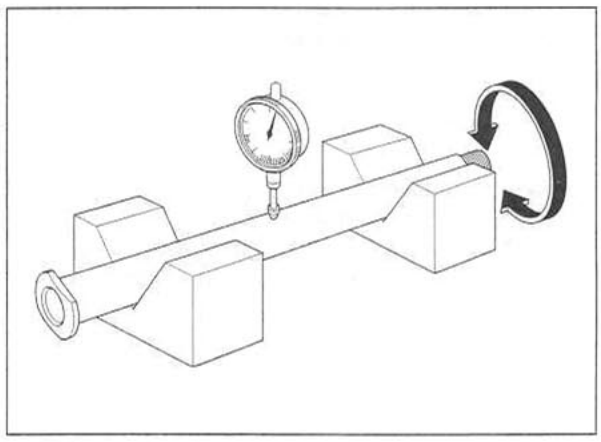

WHEEL

Check the rim runout by placing the wheel in a truing stand. Spin the wheel slowly and read the runout using a dial indicator.
Actual runout is 1/2 the total indicator reading.

SERVICE LIMITS: RADIAL: 2.0 mm (0.08 in)
AXIAL: 2.0 mm (0.08 in)

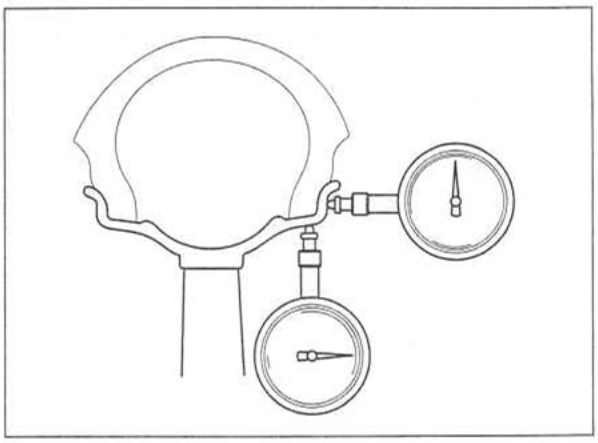

WHEEL BEARING

Turn the inner race of each bearing with your finger. The bearings should turn smoothly and quietly. Also check that the bearing outer race fits tightly in the hub.

Replace the wheel bearings in pairs.

Remove and discard the bearings if the races do not turn smoothly and quietly, or if they fit loosely in the hub.

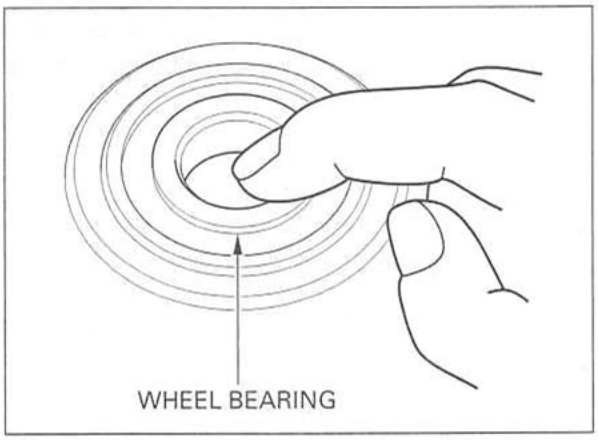

DISASSEMBLY

Remove the left dust seal.

NOTE:
- If you will replace the final driven sprocket, loosen the driven sprocket nuts. For driven sprocket inspection, refer to page 3-21.

Remove the final driven flange assembly from the left wheel hub.

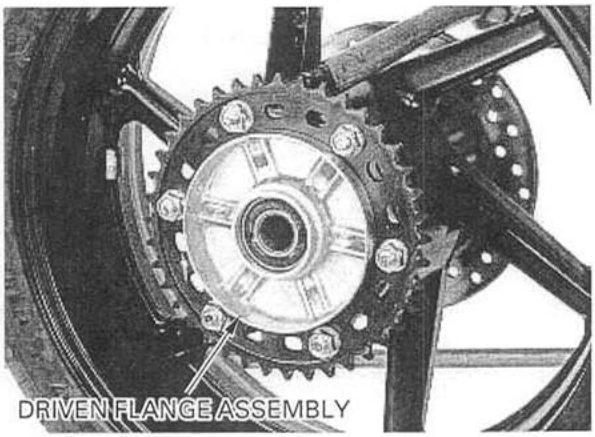

Remove the rubber dampers and O-ring.

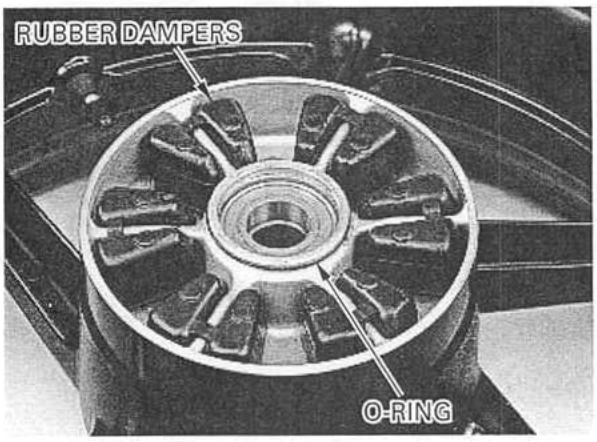

Remove the right dust seal.
Remove the bolts and brake disc.

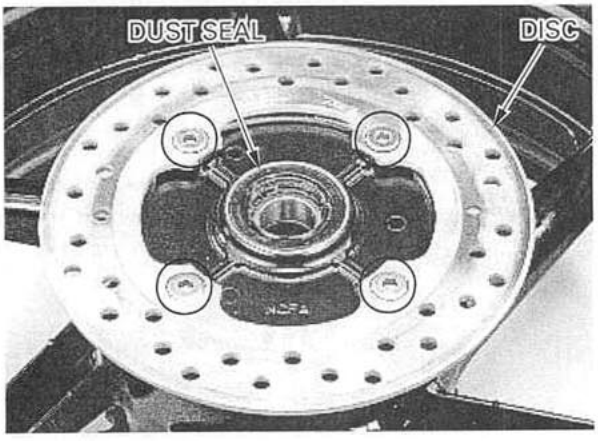

Replace the wheel bearings in pairs. Do not reuse old bearings.

Install the bearing remover head into the bearing. From the opposite side, install the bearing remover shaft and drive the bearing out of the wheel hub. Remove the distance collar and drive out the other bearing.

TOOLS:

Bearing remover shaft	07746-0050100
Bearing remover head, 25 mm	07746-0050800

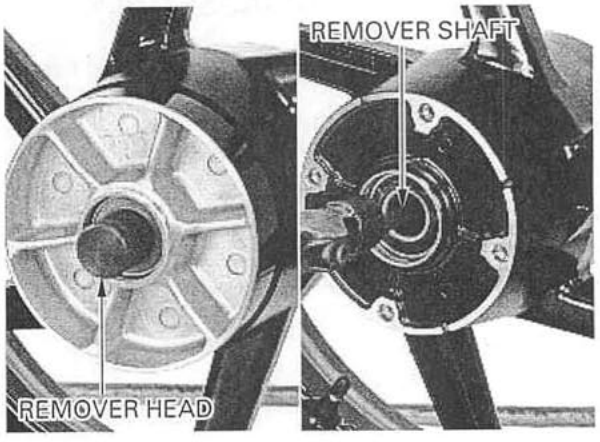

Drive the bearing out of the driven flange.

Remove the driven flange collar from the bearing.

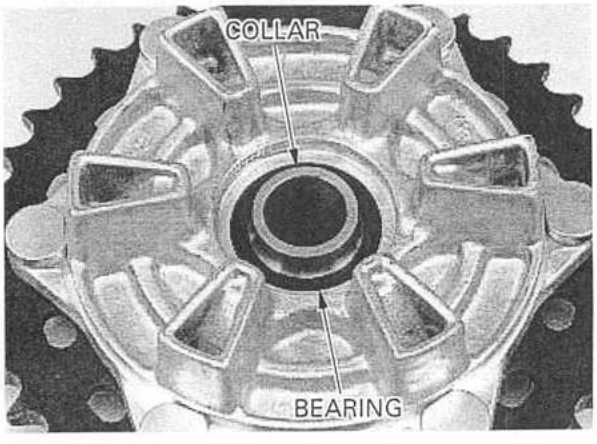

Press the driven flange collar into a new bearing.
Drive in a new driven flange bearing squarely with the marking side facing up until it is fully seated, using the special tools.

TOOLS:

Driver	07749-0010000
Attachment, 52 × 55 mm	07746-0010400
Pilot, 25 mm	07746-0040600

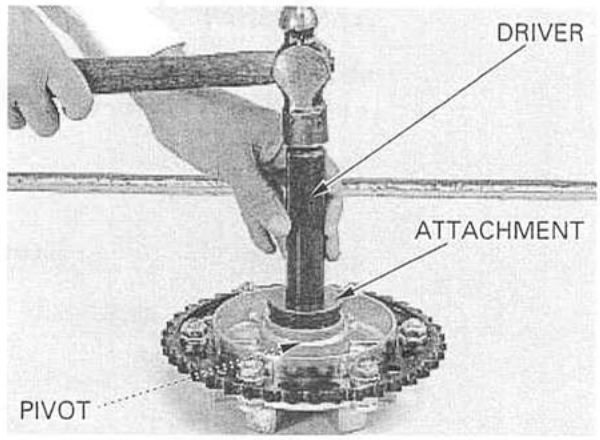

Drive in a new right bearing squarely with the marking side facing up until it is fully seated.

TOOLS:

Driver	07749-0010000
Attachment, 52 × 55 mm	07746-0010400
Pilot, 25 mm	07746-0040600

Install the distance collar.
Drive in a new left bearing squarely with the marking side facing up until it is fully seated.

TOOLS:

Driver	07749-0010000
Attachment, 42 × 47 mm	07746-0010300
Pilot, 25 mm	07746-0040600

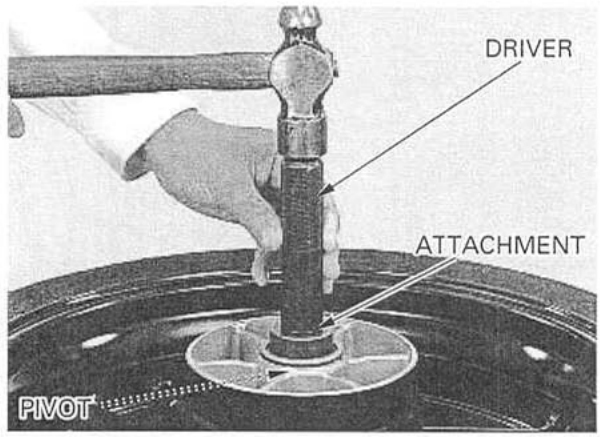

Install the brake disc onto the right wheel hub.
Install new disc bolts and tighten them in a criss-cross pattern in two or three steps.

TORQUE: 42 N·m (4.3 kgf·m , 31 lbf·ft)

Apply grease to a new dust seal lip and install it into the right wheel hub.

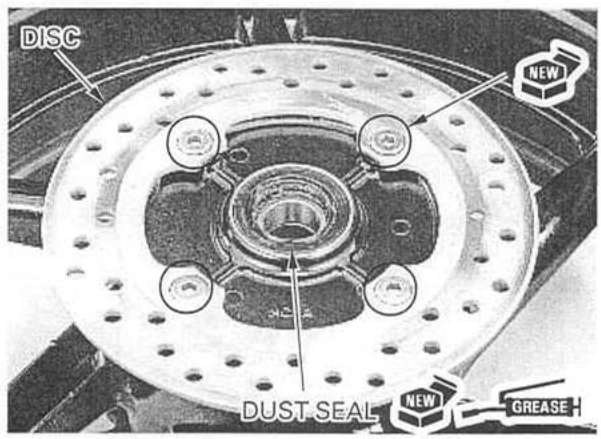

Install the rubber dampers into the left wheel hub.
Coat a new O-ring with grease and install it into the left wheel hub groove.

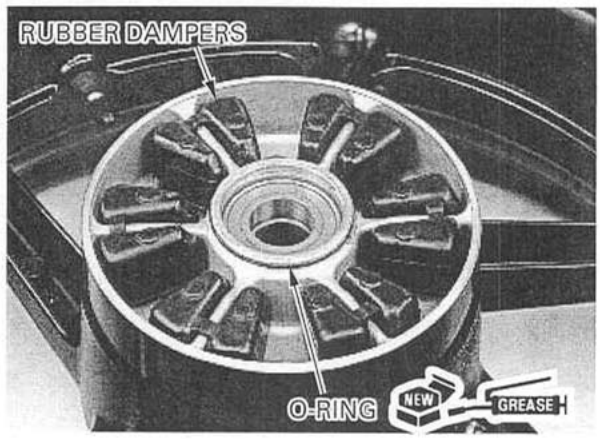

Install the driven flange assembly into the left wheel hub.
When the driven sprocket is replaced, install a new sprocket and tighten the nuts.

TORQUE: 64 N·m (6.5 kgf·m , 47 lbf·ft)

Apply grease to a new dust seal lip and install it into the driven flange.

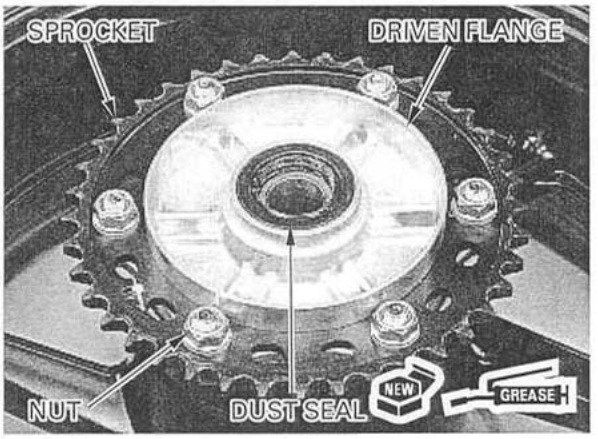

INSTALLATION

Install the side collars.

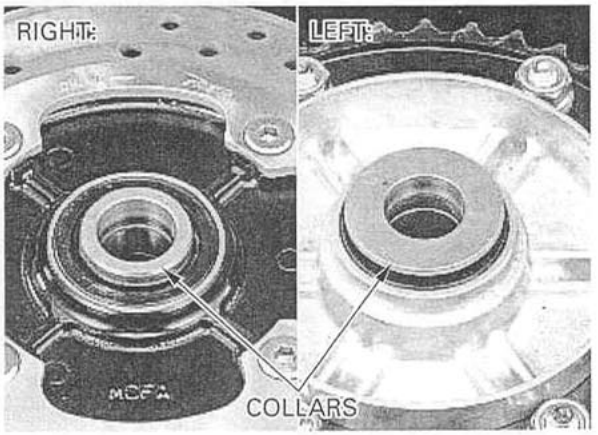

Make sure the rear brake caliper bracket boss is positioned in the swingarm groove.

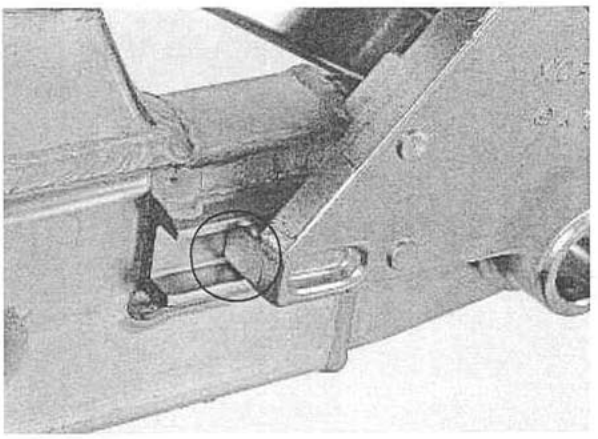

Place the rear wheel in the swingarm so the brake disc is positioned between the pads.
Install the drive chain over the driven sprocket.
Insert the rear axle from the left side through the chain adjusters, swingarm, wheel and caliper bracket.
Install the washer and axle nut.

Adjust the drive chain slack (page 3-20).

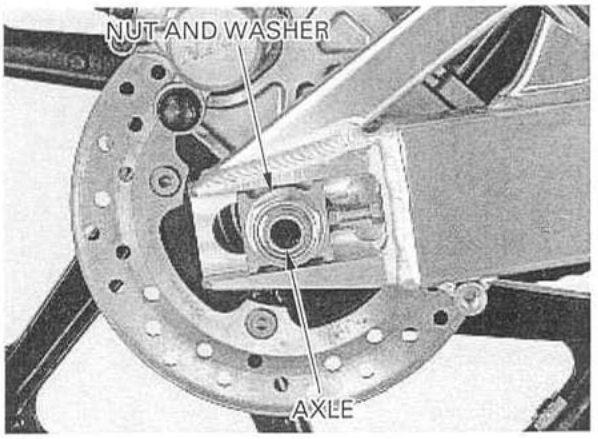

SHOCK ABSORBER

REMOVAL

Remove the following:
- seat cowl (page 2-2)
- lower fairings (page 2-4)

Support the motorcycle securely with a hoist or equivalent.

Remove the bolt (After '01: screw) and rear brake hose clamp from the swingarm.

NOTE:
- The brake hose will be pulled by the swingarm when the shock absorber mounting bolt is removed if the rear brake hose clamp is installed.

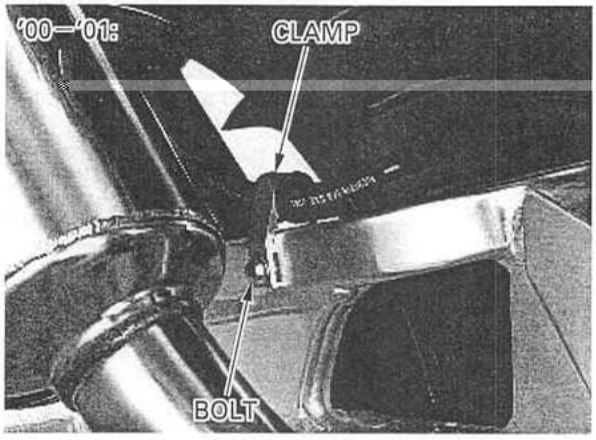

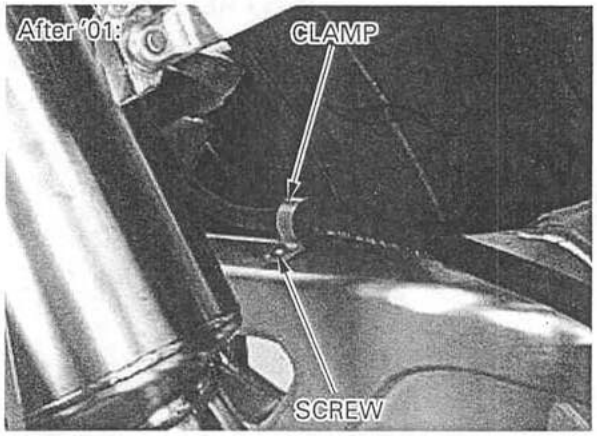

Remove the shock absorber upper and lower mounting nuts and bolts.

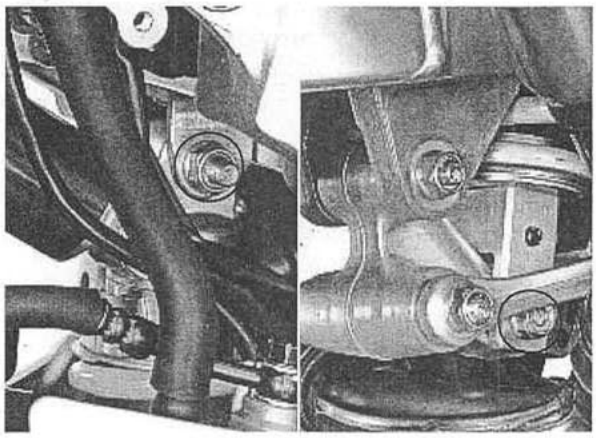

'00–'01: Remove the shock absorber from the right side of the frame as shown.

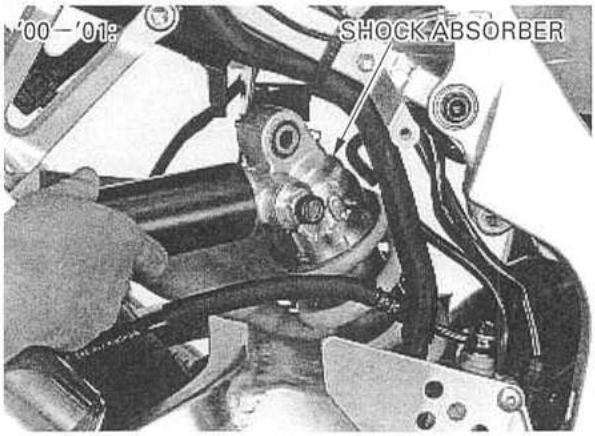

After '01: Remove the shock absorber from the left side of the frame as shown.

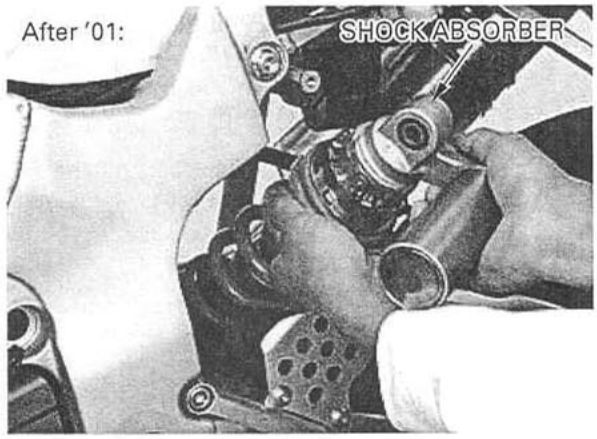

INSPECTION

Check the damper unit for leakage or other damage.
Check the upper joint bushing for wear or damage.
Replace the shock absorber assembly if necessary.

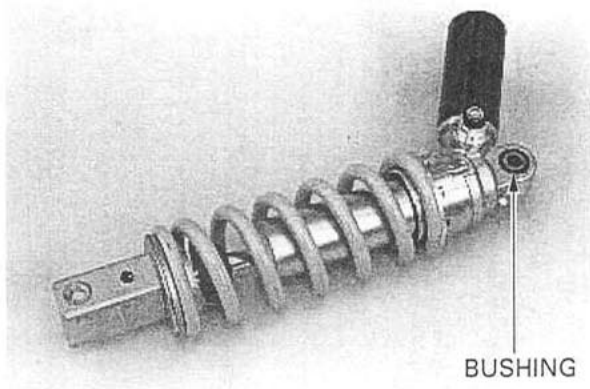

DISPOSAL

NOTICE

- *The shock absorber contains nitrogen gas under high pressure. Do not allow fire or heat near the shock absorber.*
- *The damper unit is filled with nitrogen gas under high pressure, do not try to disassemble it.*

Remove the reservoir cap and release the nitrogen gas by depressing the valve core.
After the nitrogen gas is released completely, remove the valve.

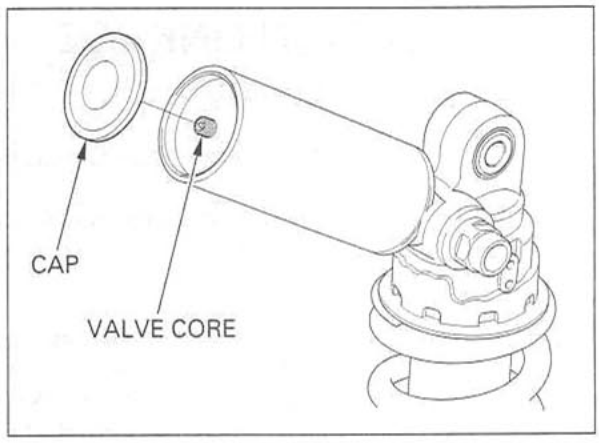

INSTALLATION

Install the shock absorber in the frame from the right (After '01: left) side.
Install the upper and lower mounting bolts and nuts, and tighten the nuts.

TORQUE: 44 N·m (4.5 kgf·m , 33 lbf·ft)

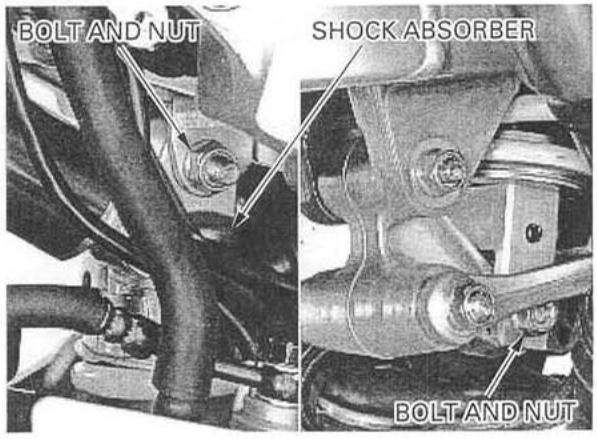

Apply locking agent to the brake hose clamp bolt (After '01: screw) threads.
Install the brake hose clamp onto the swingarm and tighten the bolt (After '01: screw).

TORQUE: '00—'01: 12 N·m (1.2 kgf·m , 9 lbf·ft)
After '01: 4.2 N·m (0.43 kgf·m , 3.1 lbf·ft)

Install the following:
—lower fairings (page 2-4)
—seat cowl (page 2-2)

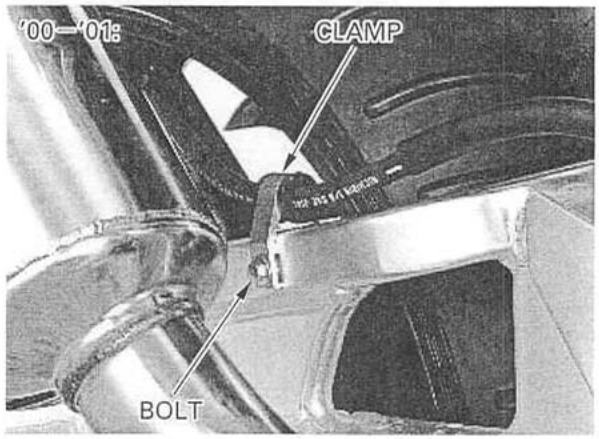

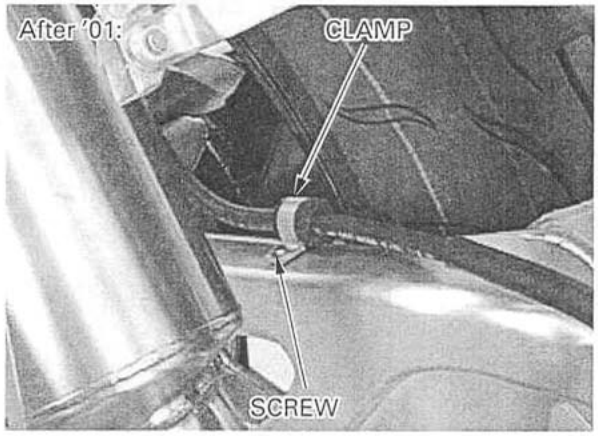

SUSPENSION LINKAGE

REMOVAL

Remove the lower fairings (page 2-4).

Support the motorcycle securely with a hoist or equivalent.

Remove the following:
—rear brake hose clamp (page 14-10)
—shock arm-to-swingarm nut and bolt
—shock arm-to-shock link nut and bolt
—shock absorber lower mounting nut and bolt
—shock arm
—shock link-to-frame nut and bolt
—shock link

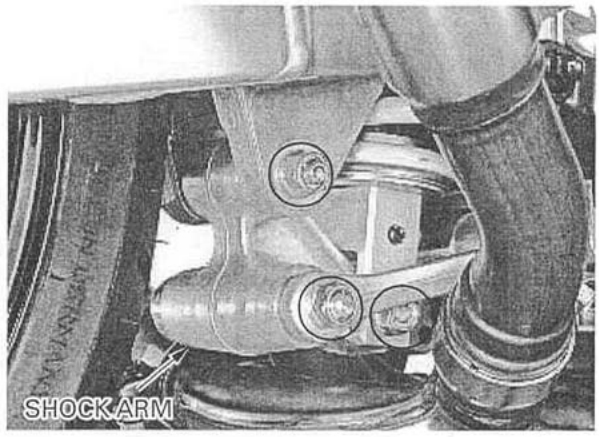

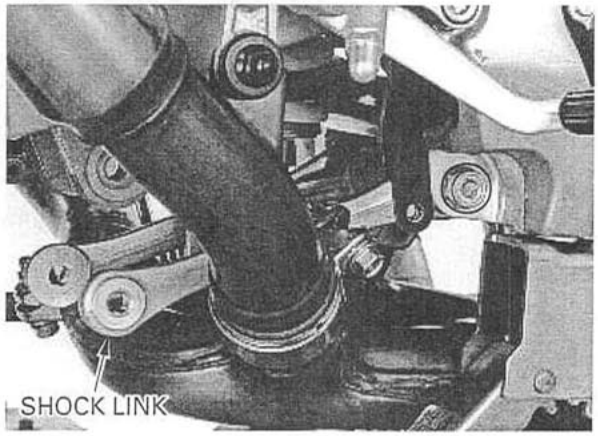

Remove the pivot collars from the shock arm and shock link pivots.

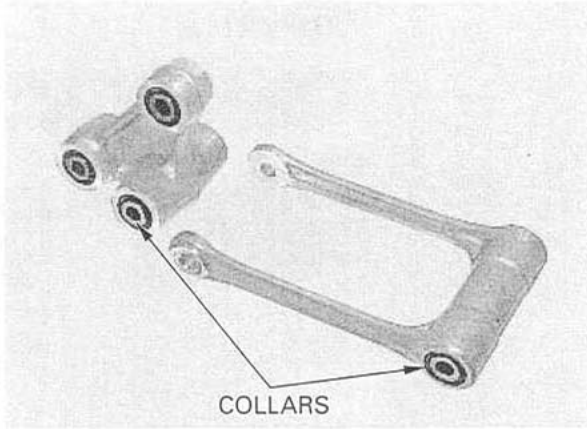

PIVOT BEARING REPLACEMENT

Remove the dust seals from the shock arm and shock link pivots.

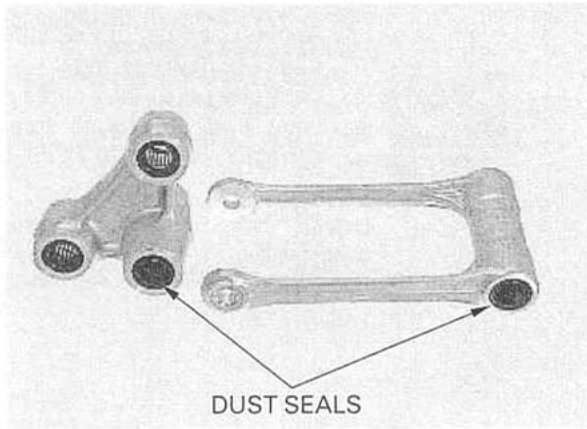

SHOCK ARM

Press the needle bearings out of the shock arm pivots using the special tools.

TOOLS:

Driver	07949-3710001
Attachment, 22 × 24 mm	07746-0010800
Pilot, 17 mm	07746-0040400

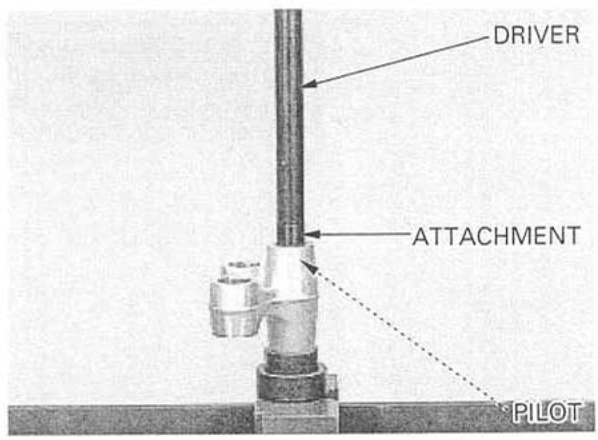

Apply molybdenum disulfide grease to the needle rollers of new bearings.

Press in the bearing with the marking side facing up.

Carefully press the needle bearing in the shock arm pivot until the depth from the shock arm outer surface is specified value, using the special tools.

SPECIFIED DEPTH:

Shock link side: 5.5 mm (0.22 in)
Shock absorber side: 5.5 mm (0.22 in)
Swingarm side: 6.5 mm (0.26 in)

TOOLS:

Driver	07749-0010000
Attachment, 24 × 26 mm	07746-0010700
Pilot, 17 mm	07746-0040400

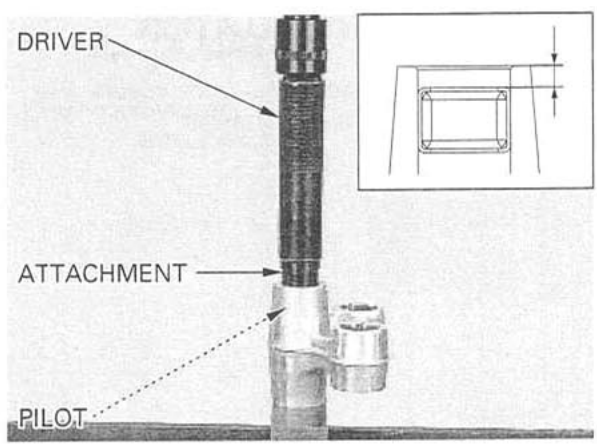

SHOCK LINK

Remove the needle bearings from the shock link pivot using the special tools.

TOOLS:

Bearing remover, 17 mm	07936-3710300
Remover handle	07936-3710100
Remover weight	07741-0010201 or 07936-371020A or 07936-3710200 (U.S.A. only)

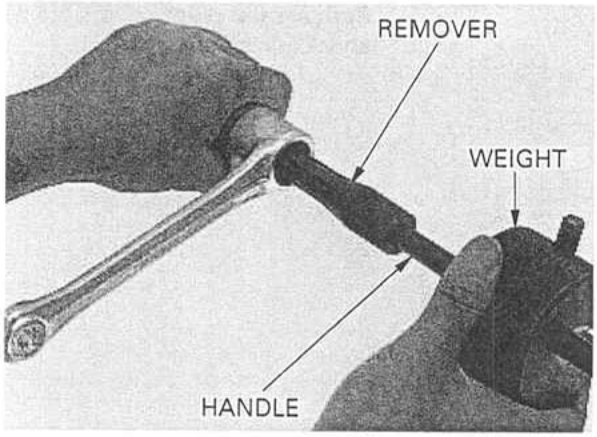

Apply molybdenum disulfide grease to the needle rollers of new bearings.

Press in the bearing with the marking side facing up.

Carefully press the needle bearing in the shock link pivot until the depth from the shock link outer surface is 5.5 mm (0.22 in), using the special tools.

TOOLS:

Driver	07749-0010000
Attachment, 24 × 26 mm	07746-0010700
Pilot, 17 mm	07746-0040400

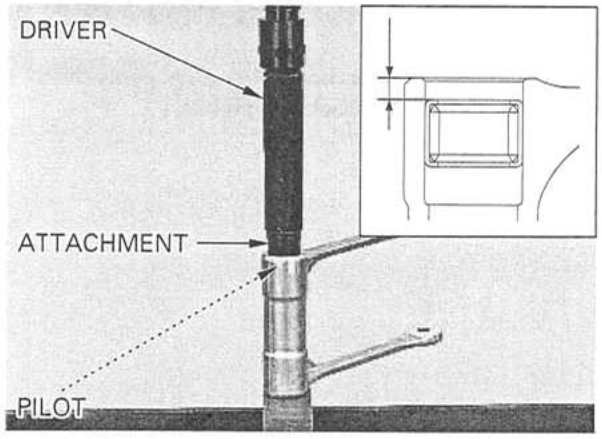

Apply molybdenum disulfide grease (After '01: extreme pressure agent mixed with grease) to new dust seal lips and install them into the shock arm and shock link pivots until they are seated.

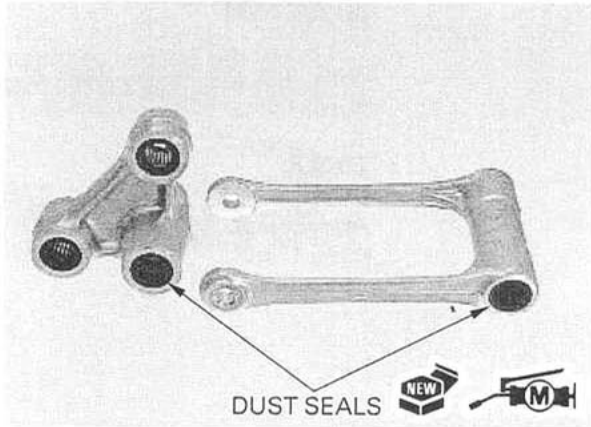

INSTALLATION

Install the pivot collars into the shock arm and shock link pivots.

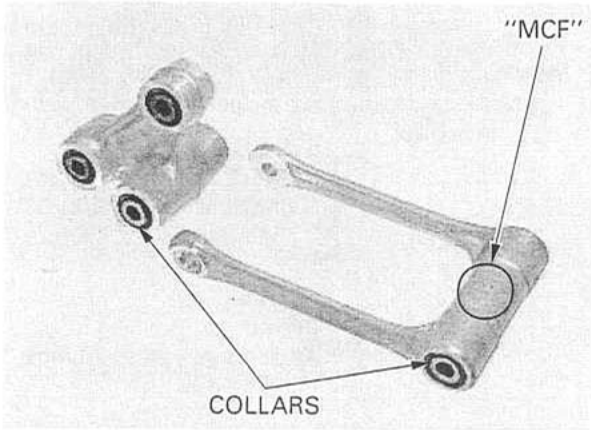

Install the shock link onto the frame with the "MCF" mark facing up.
Tighten the nut.

TORQUE: 44 N·m (4.5 kgf·m , 33 lbf·ft)

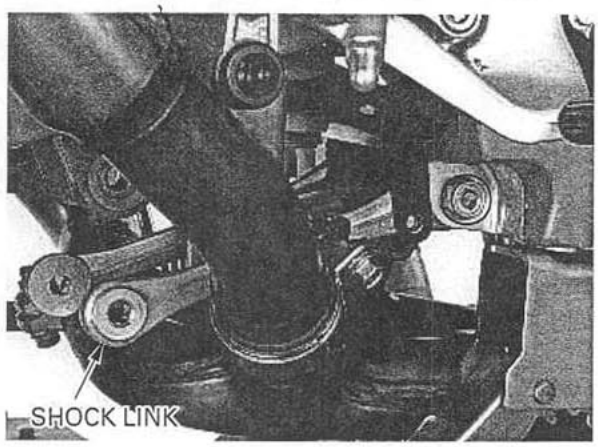

Install the shock arm into the shock absorber lower mount, swingarm and shock link.
Tighten the nuts.

TORQUE: 44 N·m (4.5 kgf·m , 33 lbf·ft)

Install the rear brake hose clamp (page 14-12).
Install the lower fairings (page 2-4).

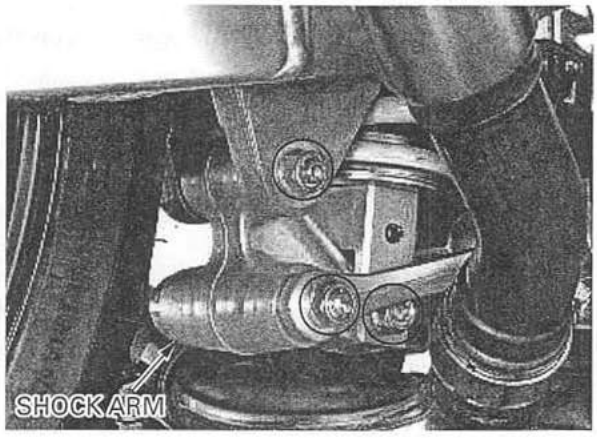

SWINGARM

REMOVAL ('00 – '01)

Remove the following:
– exhaust system (page 2-5)
– rear wheel (page 14-4)
– two bolts and drive chain cover A

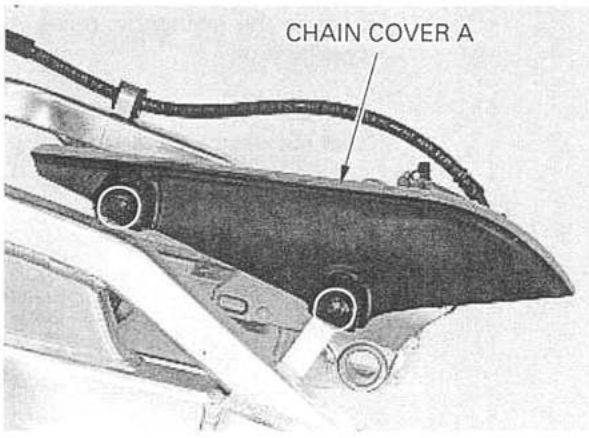

– shock absorber (page 14-10)
– rear brake caliper/bracket assembly

Support the brake caliper so it does not hang from the brake hose. Do not twist the brake hose.

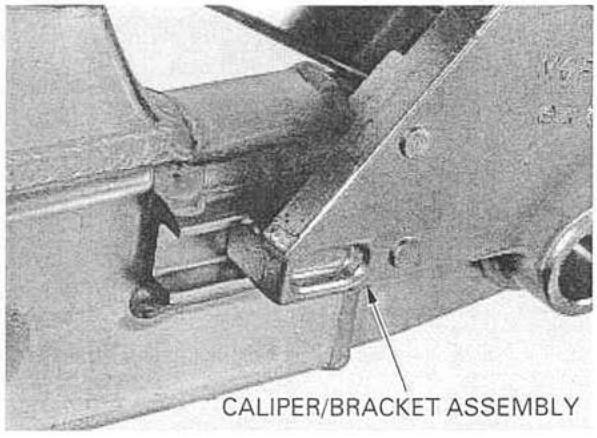

– shock arm-to-swingarm nut and bolt.
– drive sprocket (page 7-6)

Loosen the engine mounting fasteners (page 7-8).

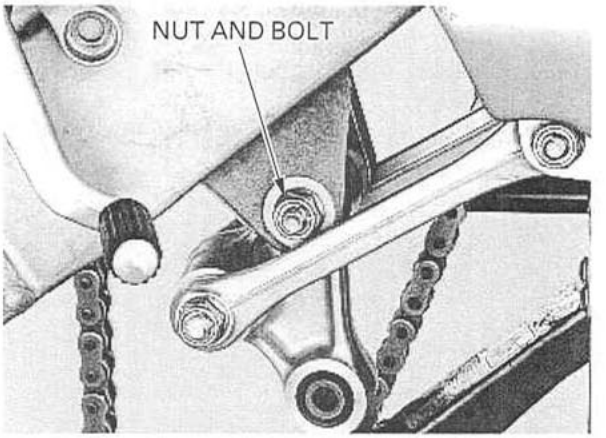

Remove the swingarm pivot nut and washer.

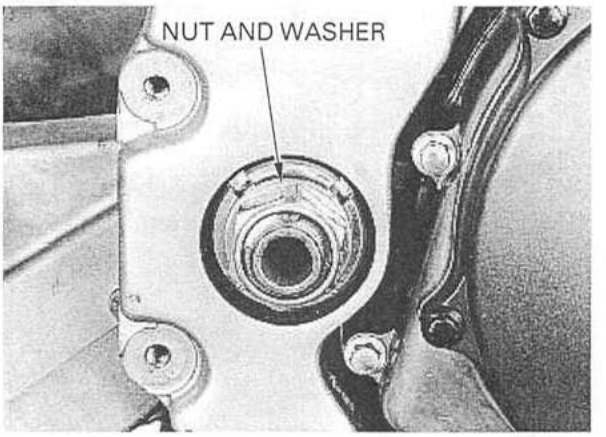

Loosen the swingarm pivot left lock nut with the special tool.

TOOL:

Lock nut wrench, 5.8 × 46 mm	07YMA-MCF0100 or 07YMA-MCFA100 (U.S.A. only)

Loosen the swingarm left pivot adjusting bolt with the pivot bolt.

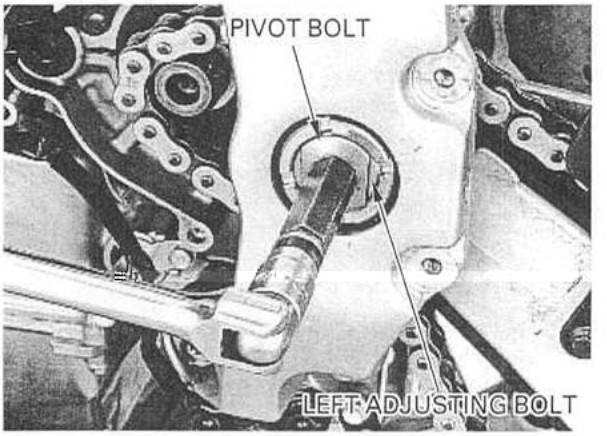

Loosen the swingarm right lock nut with the special tool.

TOOL:

Lock nut wrench, 5.8 × 46 mm	07YMA-MCF0100 or 07YMA-MCFA100 (U.S.A. only)

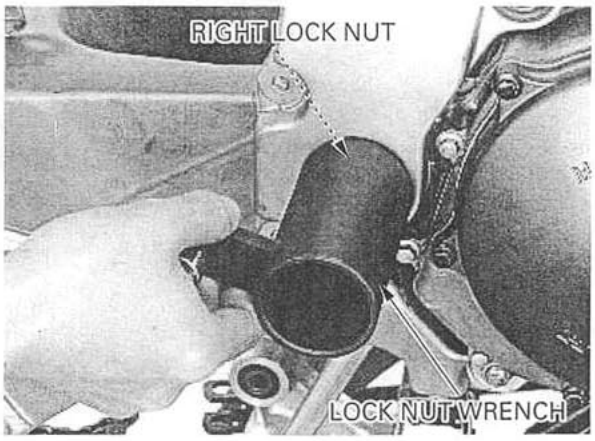

Loosen the swingarm right pivot adjusting bolt.

Remove the swingarm pivot bolt and the swingarm.

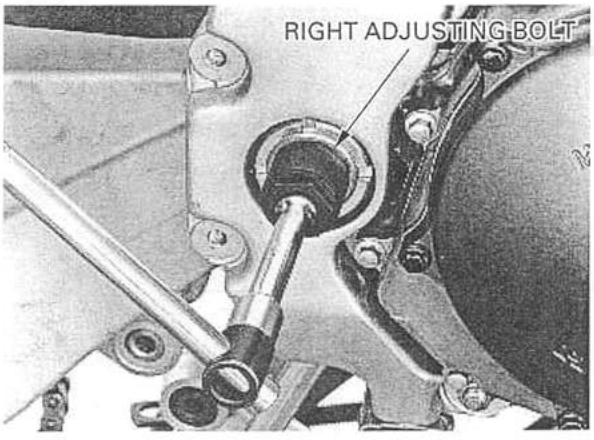

REMOVAL (After '01)

Remove the following:
- rear wheel (page 14-4)
- trim clip, bolt and drive chain cover A

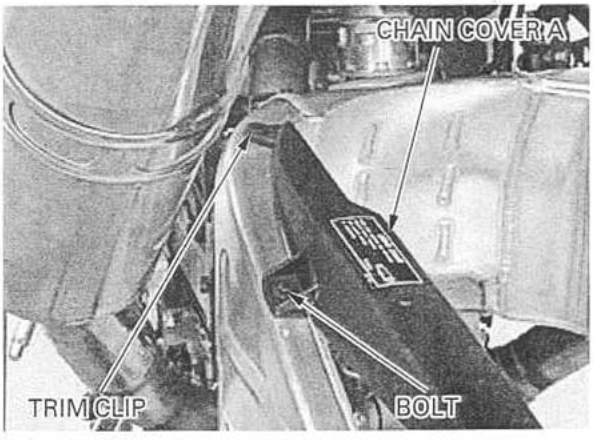

- rear brake hose clamp (page 14-10)
- rear brake caliper/bracket assembly

Support the brake caliper so it does not hang from the brake hose. Do not twist the brake hose.

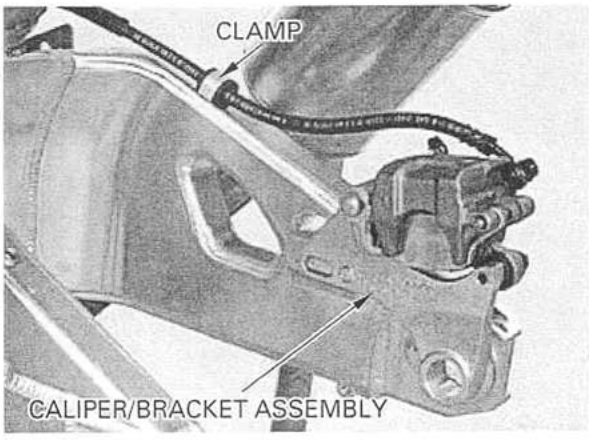

- shock arm-to-swingarm nut and bolt
- drive sprocket (page 7-6)
- radiator reserve tank mounting bolt and radiator
- reserve tank with the siphone hose connected
- fuse box bracket/clutch pipe clamp (page 7-8)

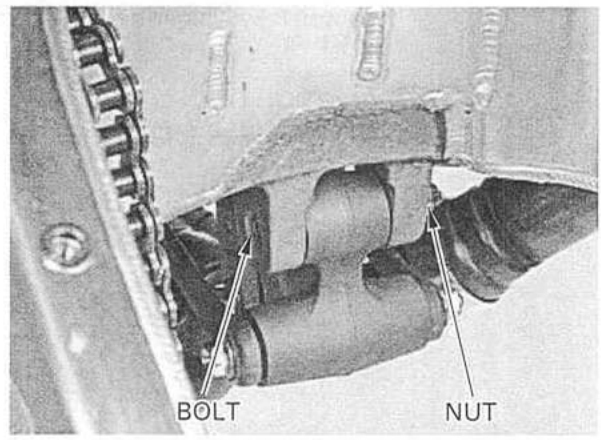

Loosen the engine hanger pinch bolts in the specified sequence as follows:
- rear lower
- rear upper
- front
- center

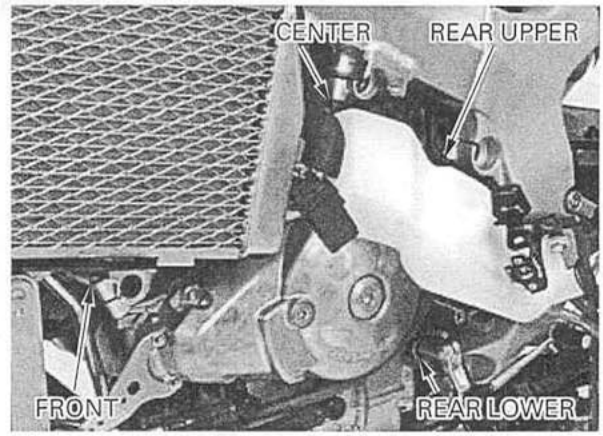

Loosen the engine hanger nuts in the specified sequence as follows:
- front
- rear lower

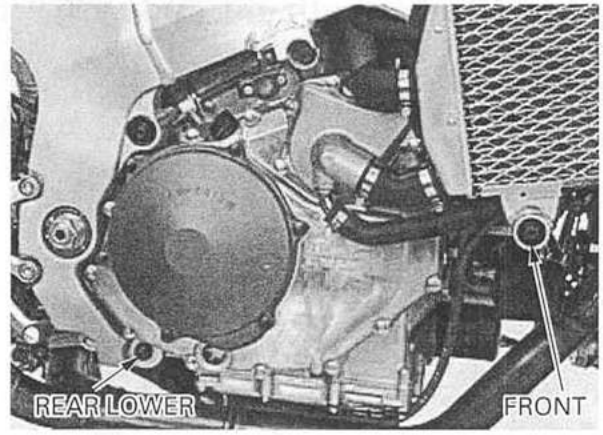

Loosen the left center engine hanger bolt.

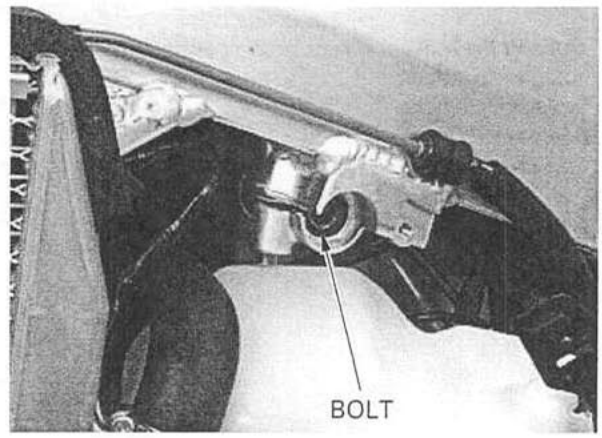

Remove the swingarm pivot nut and washer.

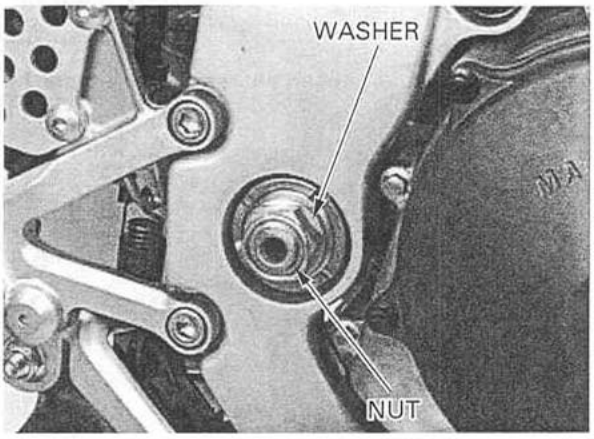

Loosen the swingarm pivot left lock nut with the special tool.

TOOL:

Lock nut wrench, 5.8 × 46 mm	07YMA-MCF0100 or 07YMA-MCFA100 (U.S.A. only)

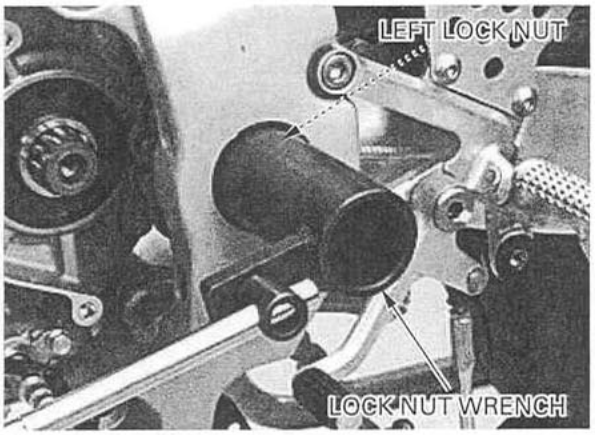

Loosen the swingarm pivot left adjusting bolt with the pivot bolt.

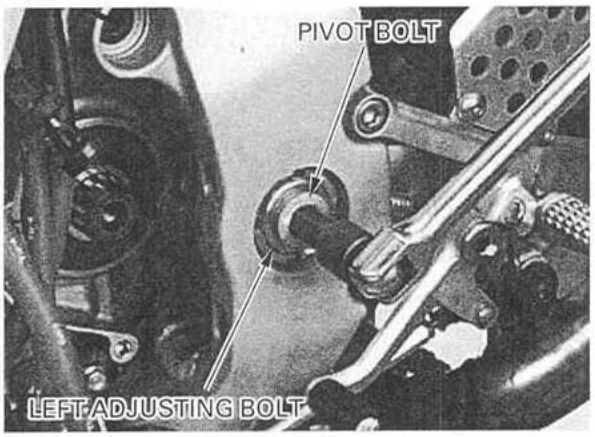

Loosen the swingarm pivot right lock nut with the special tool.

TOOL:

Lock nut wrench, 5.8 × 46 mm	07YMA-MCF0100 or 07YMA-MCFA100 (U.S.A. only)

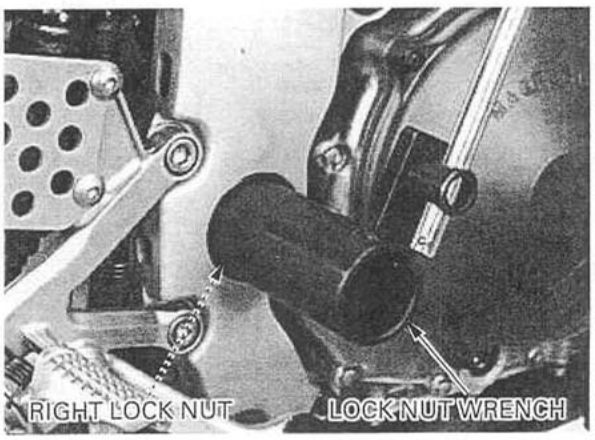

Loosen the swingarm pivot right adjusting bolt.

Loosen the rear upper engine hanger nut.

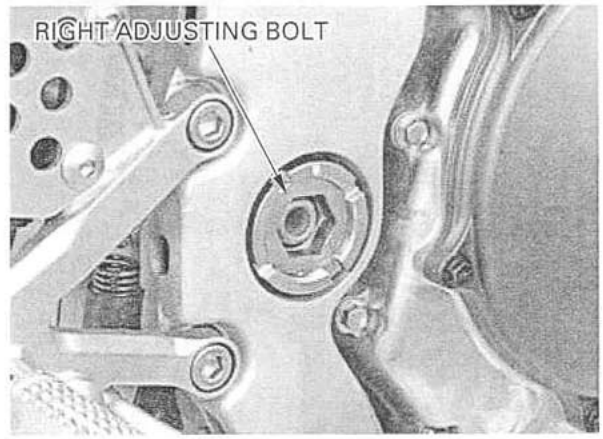

Loosen the right center engine hanger bolt.

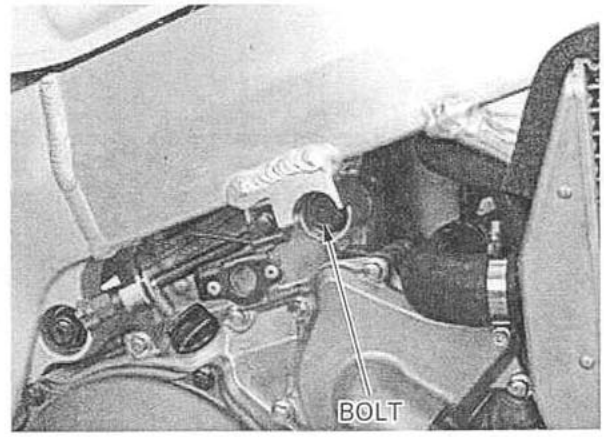

Remove the swingarm pivot bolt and the swingarm.

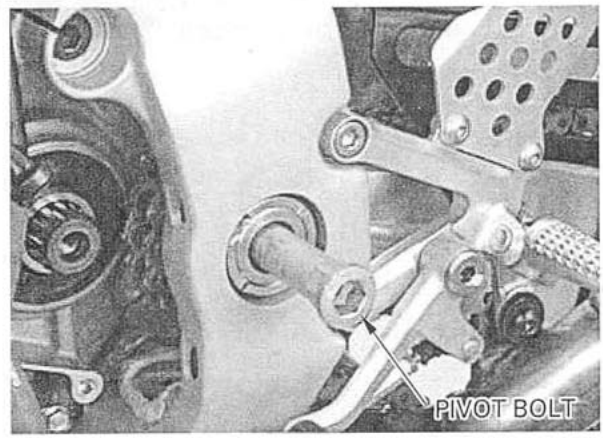

DISASSEMBLY ('00 – '01)

Remove the two bolts and drive chain cover B if necessary.

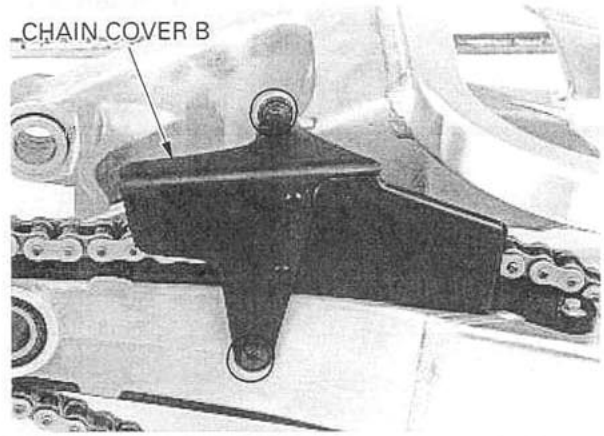

Remove the two bolts, collars and drive chain slider if necessary.

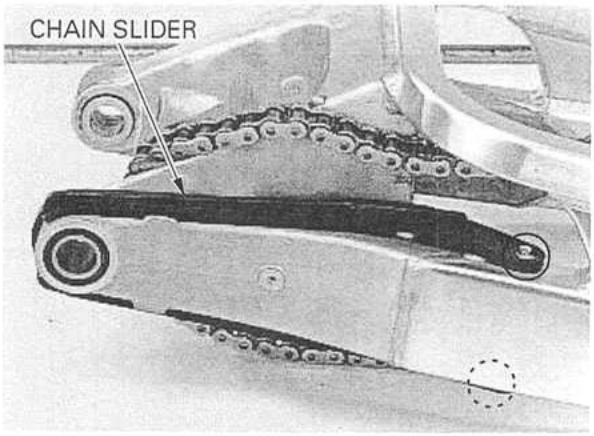

Remove the swingarm pivot collars from the swingarm pivots.

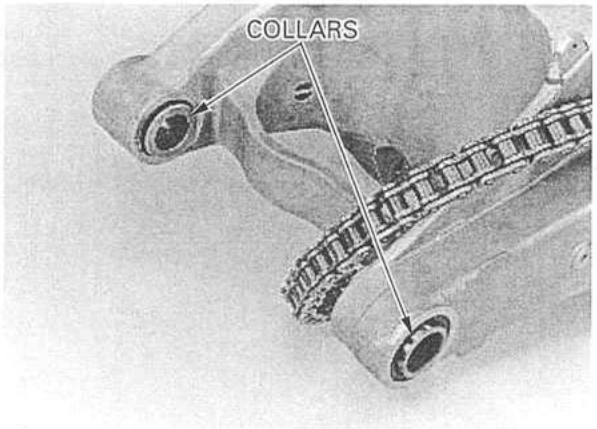

Remove the dust seals from the swingarm pivots.

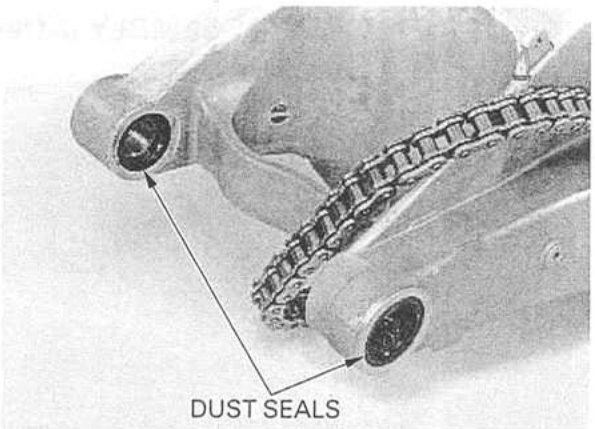

Remove the snap ring from the right swingarm pivot.

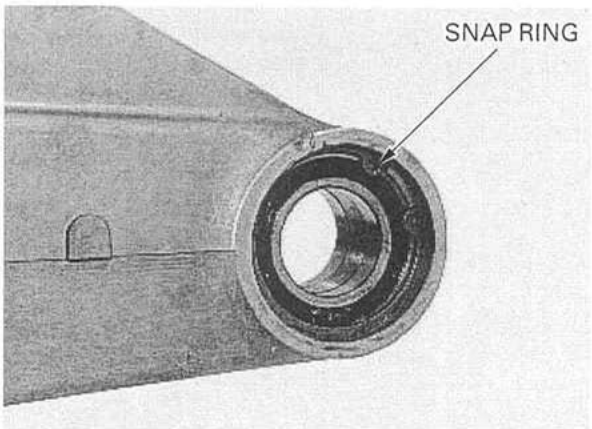

Press the swingarm right pivot bearings and distance collar out of the swingarm pivot, using the special tools.

TOOLS:

Driver	07949-3710001
Attachment, 37 × 40 mm	07746-0010200
Pilot, 25 mm	07746-0040600

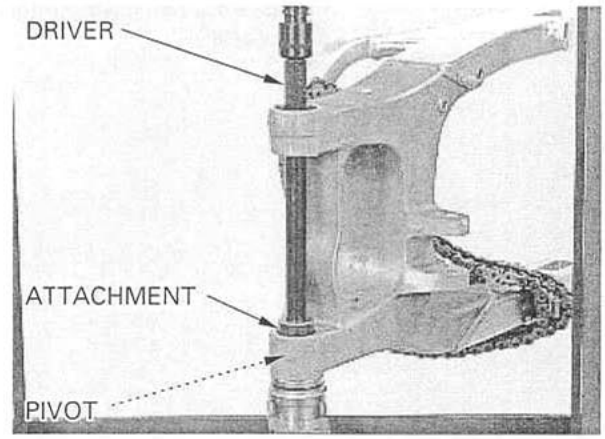

Press the swingarm left pivot bearing out of the swingarm pivot, using the special tools.

TOOLS:

Driver	07949-3710001
Attachment, 40 × 42 mm	07746-0010900
Pilot, 32 mm	07MAD-PR90200

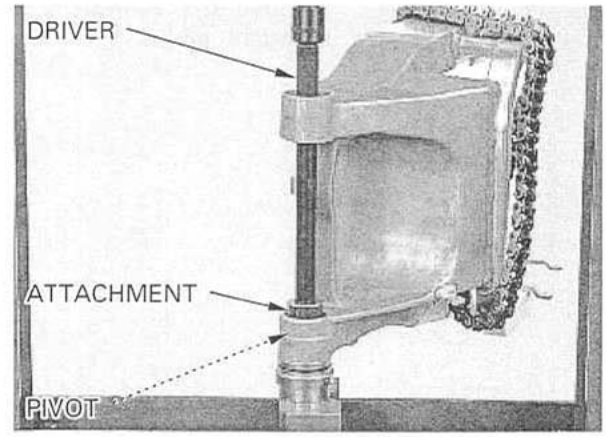

DISASSEMBLY (After '01)

Remove the two bolts, trim clip and drive chain cover B if necessary.

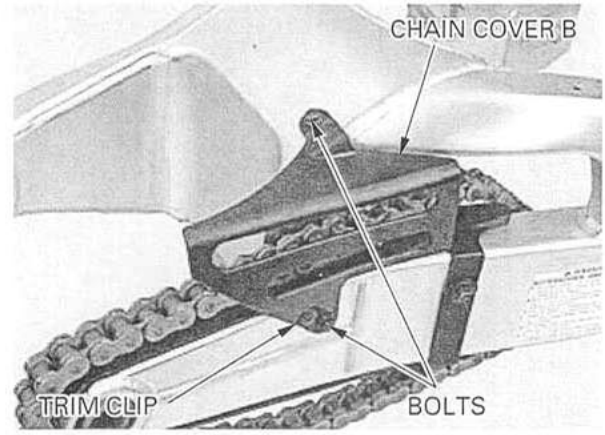

Remove the bolt, collar and drive chain slider if necessary.

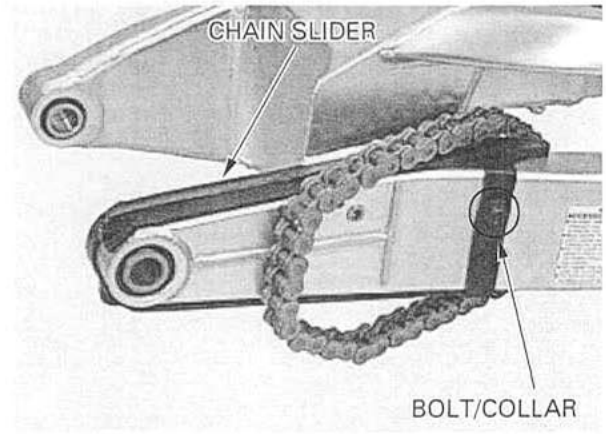

Remove the swingarm pivot collars from the swingarm pivots.

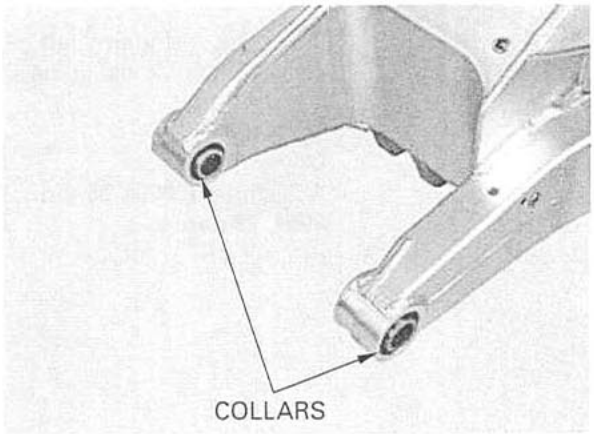

Remove the dust seals from the swingarm pivots.

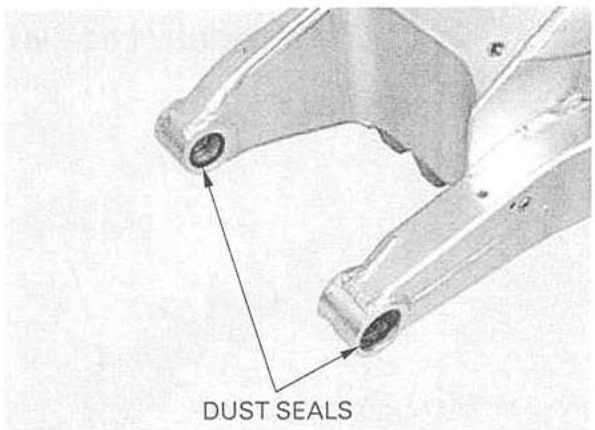

Remove the snap ring from the right swingarm pivot.

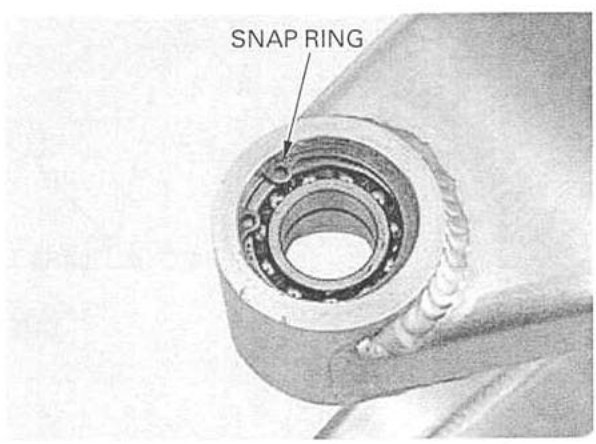

Press the swingarm right pivot bearings out of the swingarm pivot, using the special tools.

TOOLS:

Driver	07949-3710001
Attachment, 28 × 30 mm	07946-1870100
Pilot, 20 mm	07746-0040500

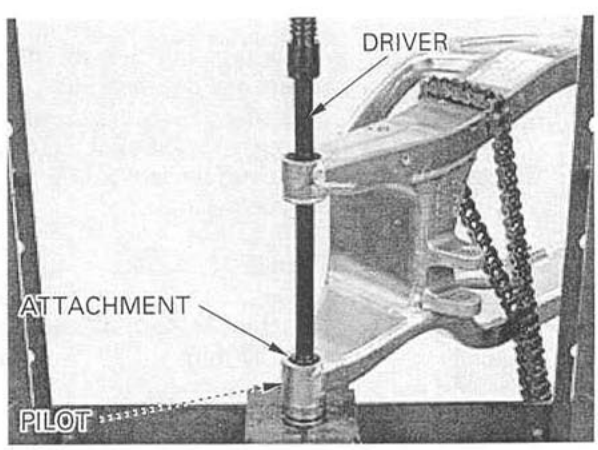

Press the swingarm left pivot bearing out of the swingarm pivot, using the special tools.

TOOLS:

Driver	07949-3710001
Attachment, 32 × 35 mm	07746-0010100
Pilot, 28 mm	07746-0041100

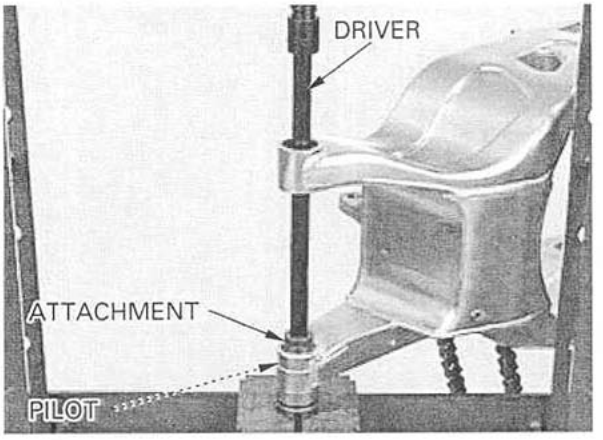

ASSEMBLY ('00 – '01)

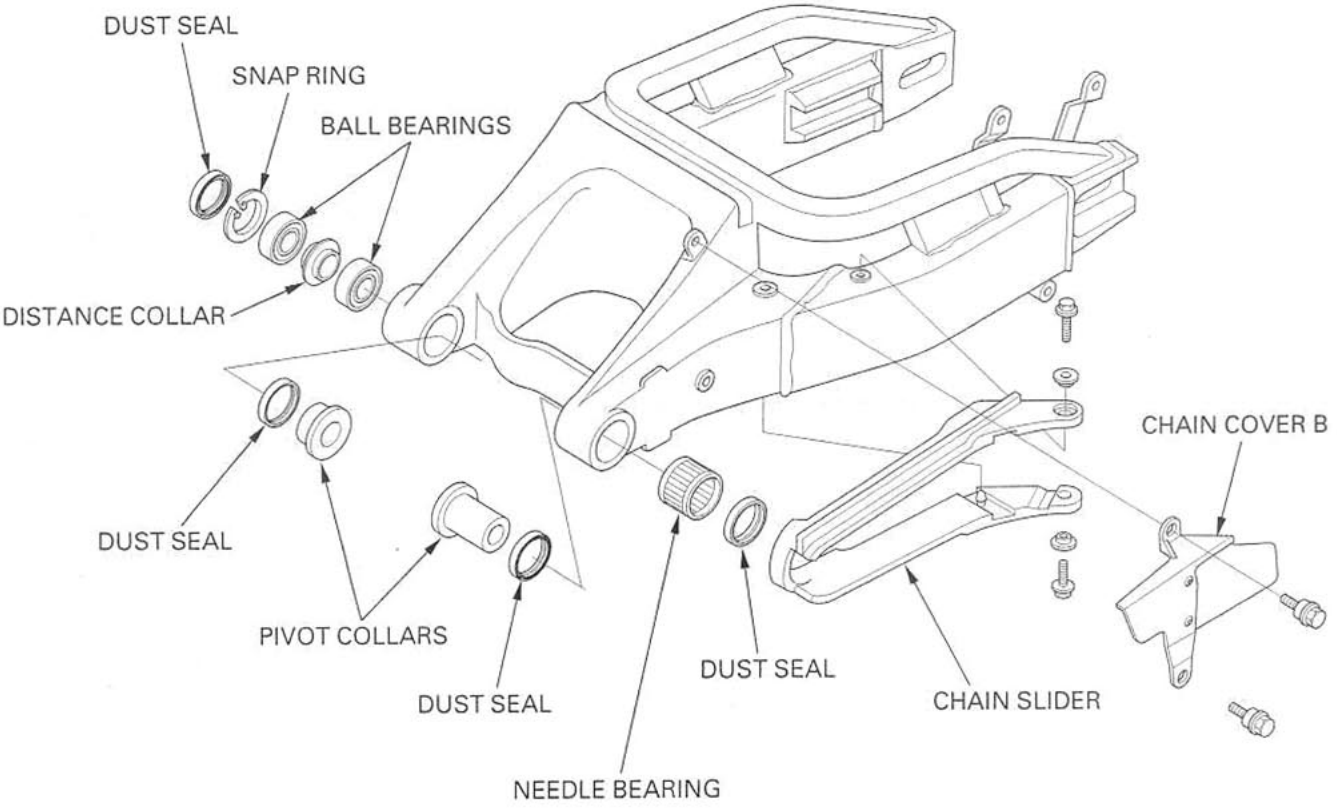

Apply molybdenum disulfide grease to the needle rollers of a new bearing.

Press in the bearing with the marking side facing up.

Carefully press the needle bearing into the left swingarm pivot until the depth from the swingarm outer surface is 6.5 – 7.5 mm (0.26 – 0.30 in), using the special tool.

TOOLS:

Driver	07749-0010000
Attachment, 40 × 42 mm	07746-0010900
Pilot, 32 mm	07MAD-PR90200

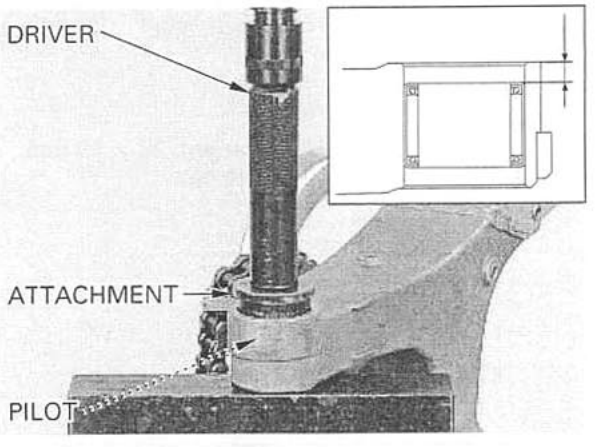

Pack new bearing cavities with molybdenum disulfide grease.
Press the inner bearing into the right swingarm pivot with the sealed side facing down until it is fully seated, using the special tools.
Install the distance collar.
Press the outer bearing into the right swingarm pivot with the sealed side facing up until it is seated, using the special tools.

TOOLS:

Driver	07749-0010000
Attachment, 40 × 42 mm	07746-0010900
Pilot, 25 mm	07746-0040600

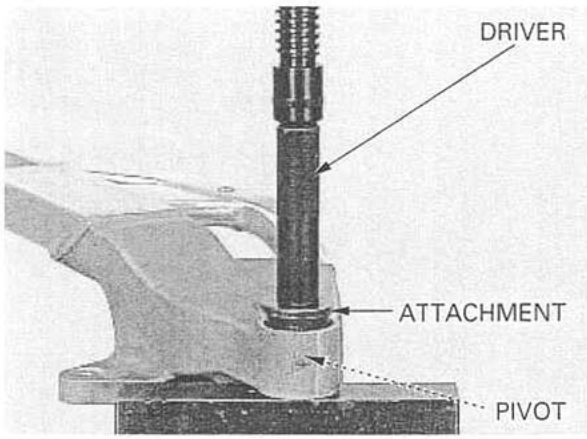

Install the snap ring into the right swingarm pivot.

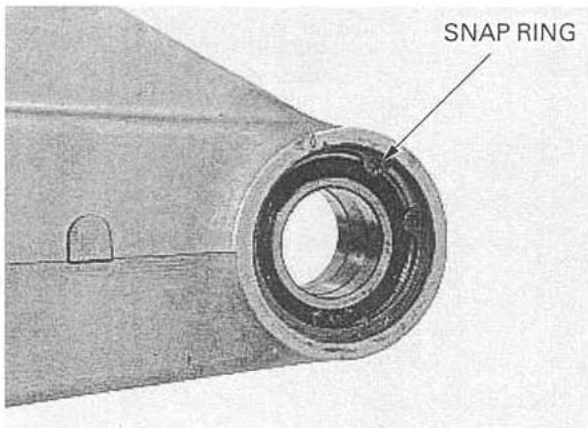

Apply molybdenum disulfide grease to new dust seal lips and install them into the swingarm pivots.

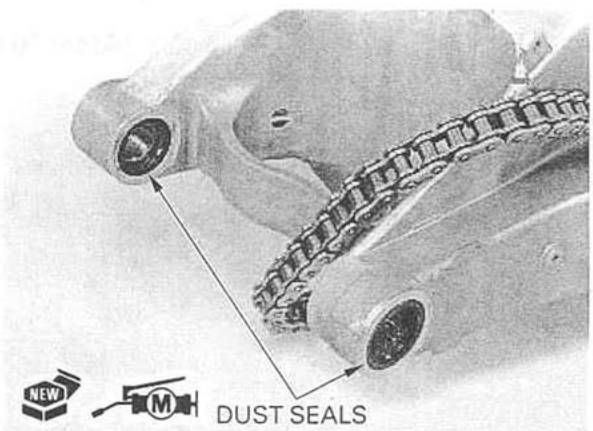

Install the swingarm pivot collars into swingarm pivots.

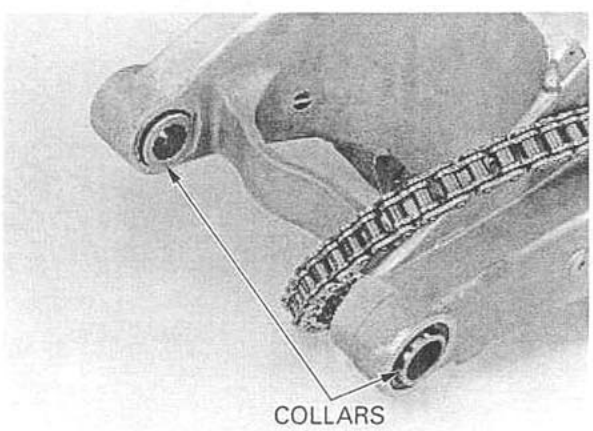

Install the drive chain slider if removed.
Apply locking agent to the slider bolt threads.
Install the collars and slider bolts, and tighten bolts.

TORQUE: 9 N·m (0.9 kgf·m , 6.5 lbf·ft)

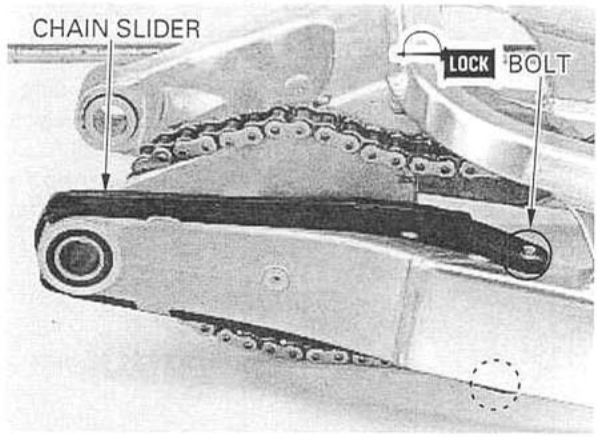

Install drive chain cover B and tighten the bolts securely if removed.

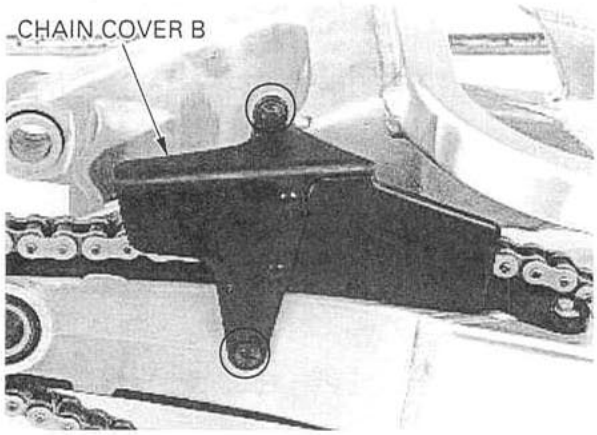

ASSEMBLY (After '01)

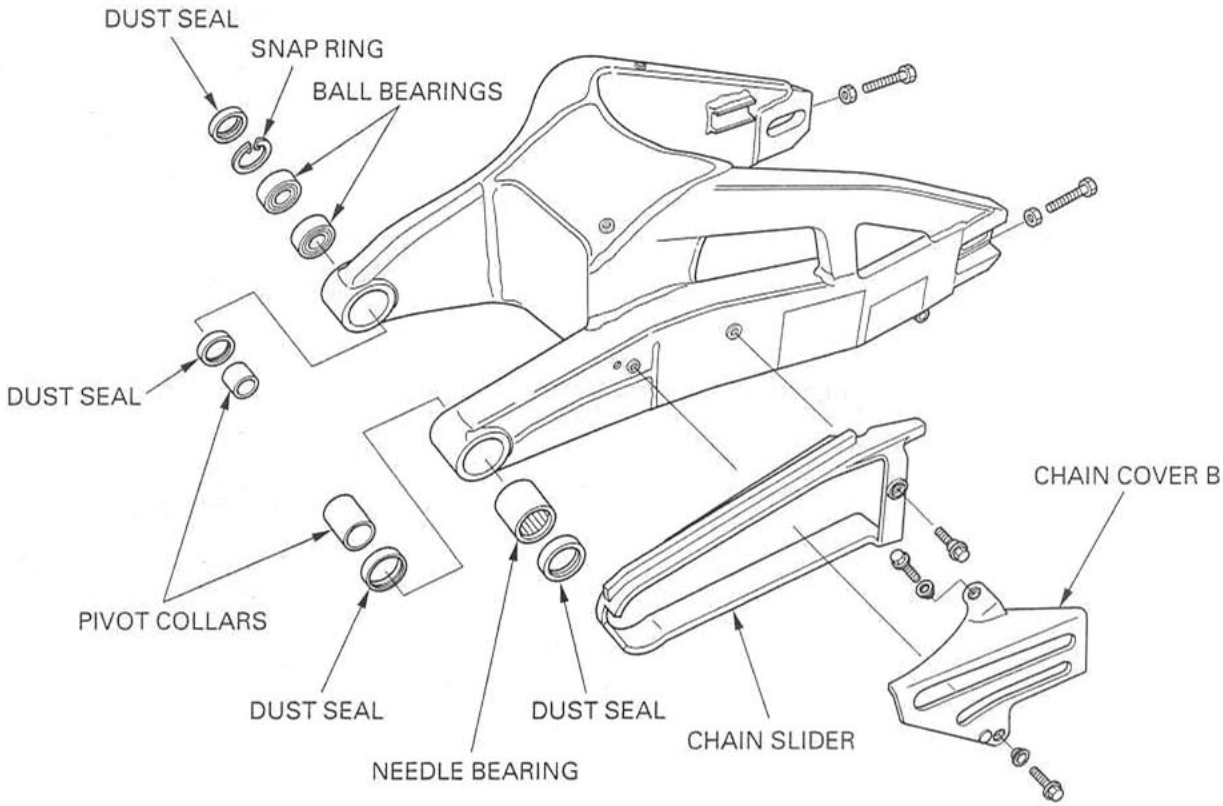

Install the swingarm pivot collars into swingarm pivots.

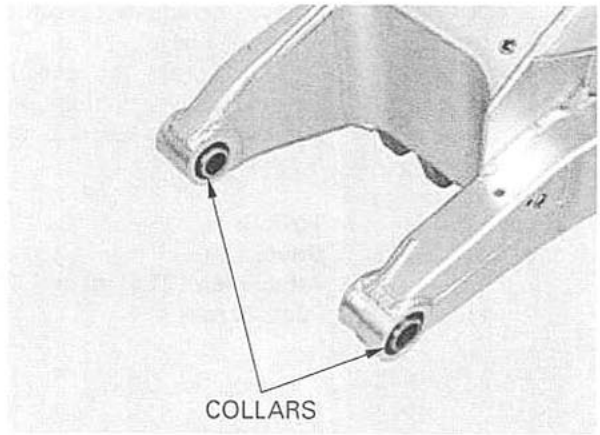

Install the drive chain slider if removed.
Apply locking agent to the slider bolt threads.
Install the collar and slider bolt, and tighten the bolt.

TORQUE: 9 N·m (0.9 kgf·m , 6.5 lbf·ft)

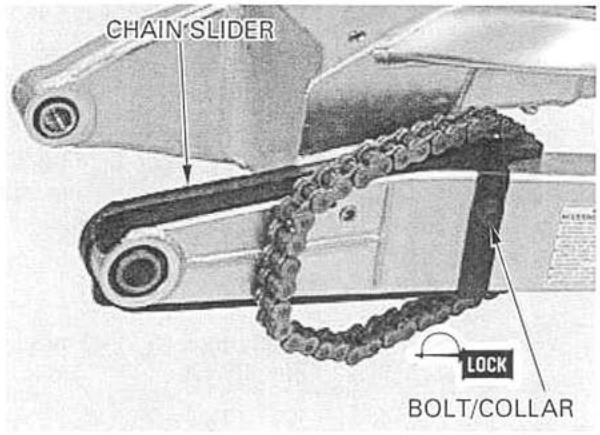

Install the drive chain cover B and trim clip.
Tighten the bolt.

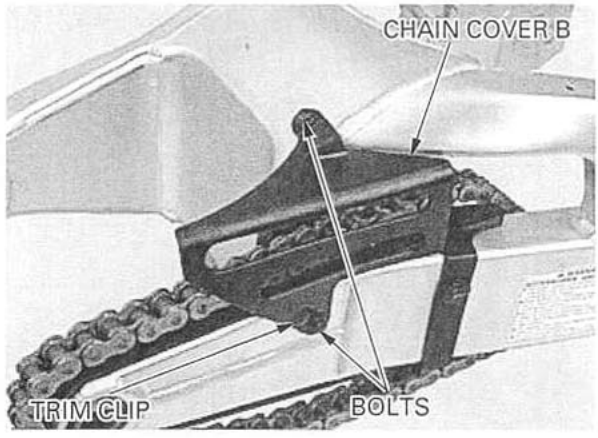

INSTALLATION ('00 – '01)

NOTE:

- When tightening the lock nut with the lock nut wrench, refer to torque wrench reading information on page 14-2 "SERVICE INFORMATION".

Tighten the rear upper and lower engine mounting fasteners (page 7-13).

Install the swingarm onto the engine and insert the pivot bolt from the left side.

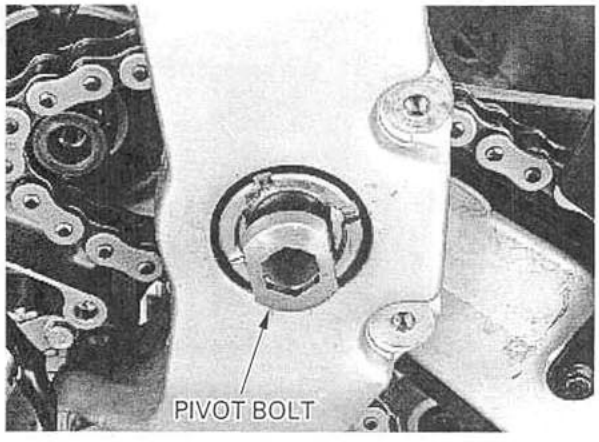

Tighten the swingarm right pivot adjusting bolt.

TOOL:
Fork rod holder 07930-KA50100

TORQUE: 15 N·m (1.5 kgf·m , 11 lbf·ft)

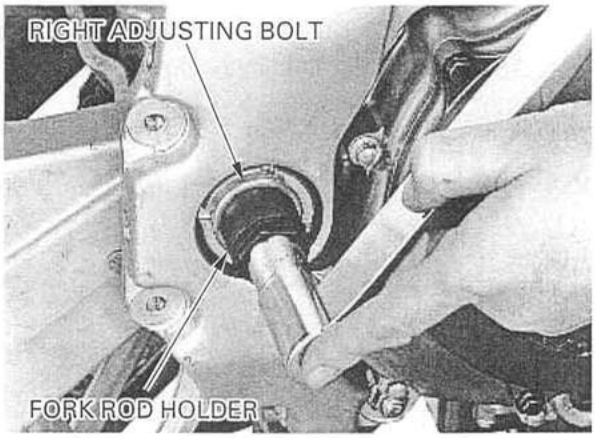

Hold the swingarm right pivot adjusting bolt and tighten the right lock nut, using the special tool.

TOOL:
Lock nut wrench, 5.8 × 46 mm 07YMA-MCF0100 or 07YMA-MCFA100 (U.S.A. only)

TORQUE: **Actual:** 64 N·m (6.5 kgf·m , 47 lbf·ft)
Indicated: 58 N·m (5.9 kgf·m , 43 lbf·ft)

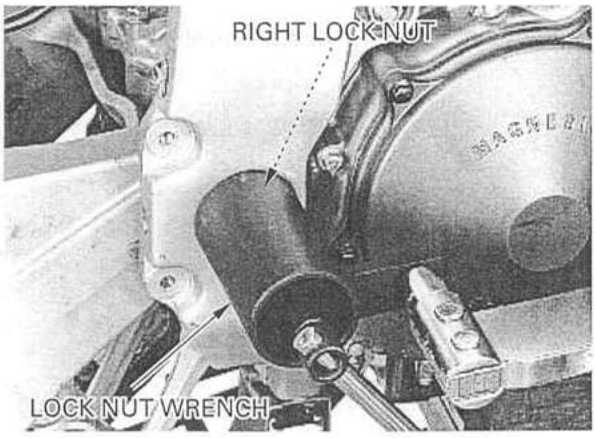

Tighten the swingarm left pivot adjusting bolt with the pivot bolt.

TORQUE: 15 N·m (1.5 kgf·m , 11 lbf·ft)

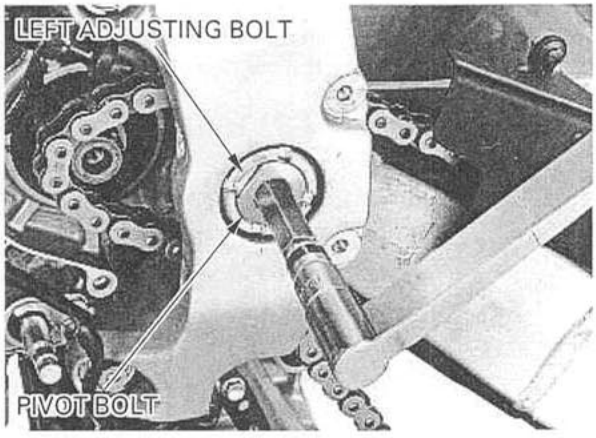

Hold the swingarm pivot bolt and tighten the left lock nut, using the special tool.

TOOL:
Lock nut wrench, 5.8 × 46 mm 07YMA-MCF0100 or 07YMA-MCFA100 (U.S.A. only)

TORQUE: **Actual:** 64 N·m (6.5 kgf·m , 47 lbf·ft)
Indicated: 58 N·m (5.9 kgf·m , 43 lbf·ft)

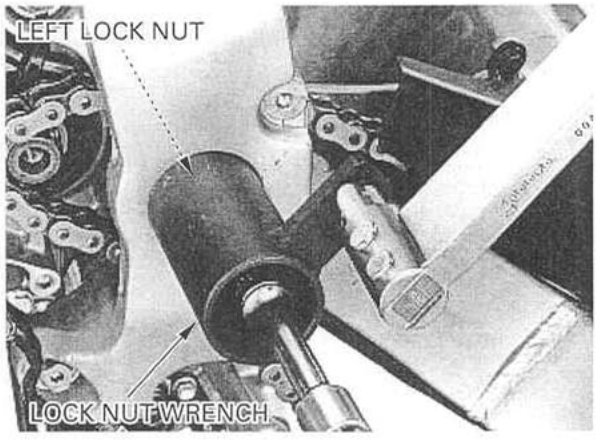

Install the washer and swingarm pivot nut, and tighten the nut.

TORQUE: 127 N·m (13.0 kgf·m , 94 lbf·ft)

Tighten the front and center engine mounting fasteners (page 7-14).

Install the drive sprocket (page 7-20).

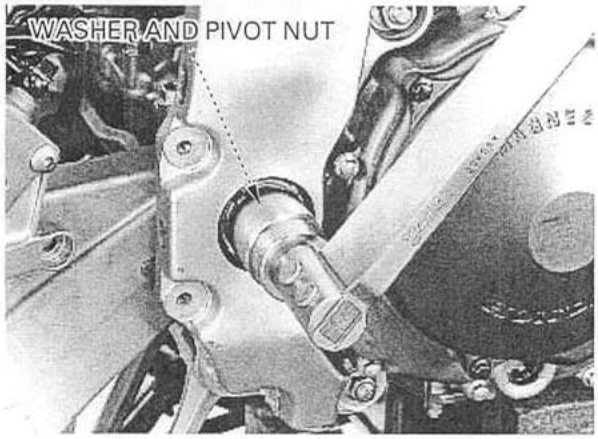

Install the shock arm-to-swingarm bolt and nut, and tighten the nut.

TORQUE: 44 N·m (4.5 kgf·m , 33 lbf·ft)

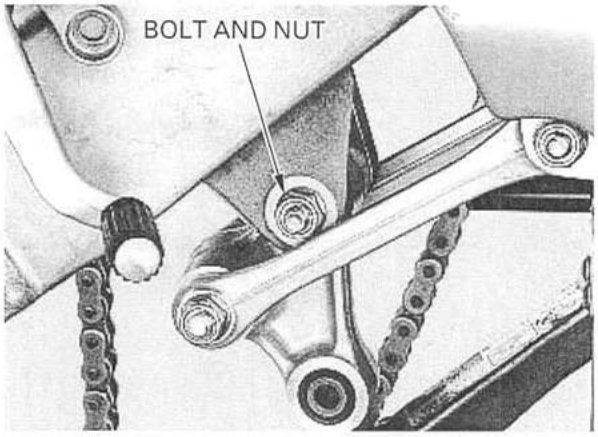

Install the rear brake caliper/bracket assembly onto the swingarm.

Install the shock absorber (page 14-11).

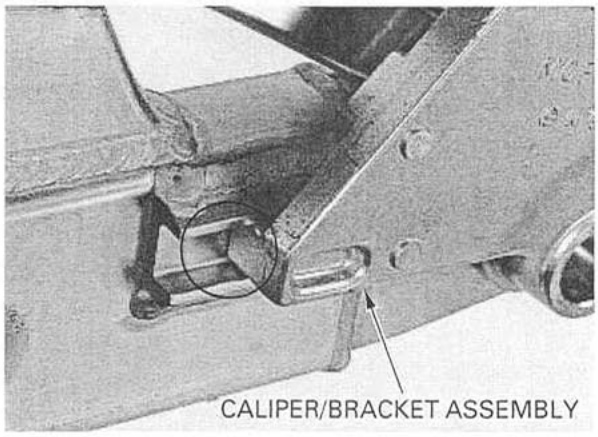

Install drive chain cover A and tighten the two bolts securely.

Install the rear wheel (page 14-9).
Install the exhaust system (page 2-7).

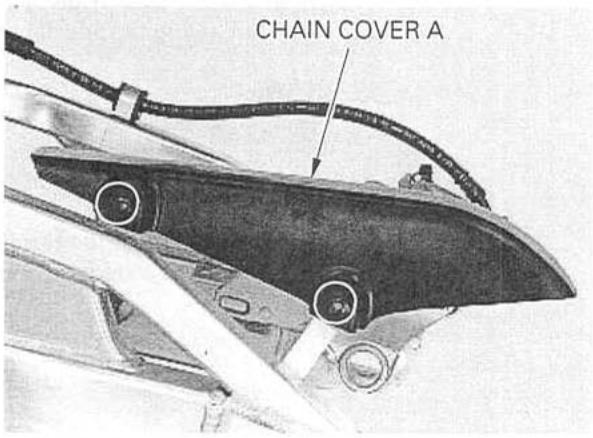

INSTALLATION (After '01)

NOTE:

- When tightening the lock nut with the lock nut wrench, refer to torque wrench reading information on page 14-2 "SERVICE INFORMATION".
- Be sure to tighten all engine mounting fasteners to the specified torque in the specified sequence described below. If you make a mistake with the tightening torque or sequence, loosen all mounting fasteners, then tighten them again to the specified torque in the specified sequence.

Install the swingarm onto the engine and insert the pivot bolt from the left side.

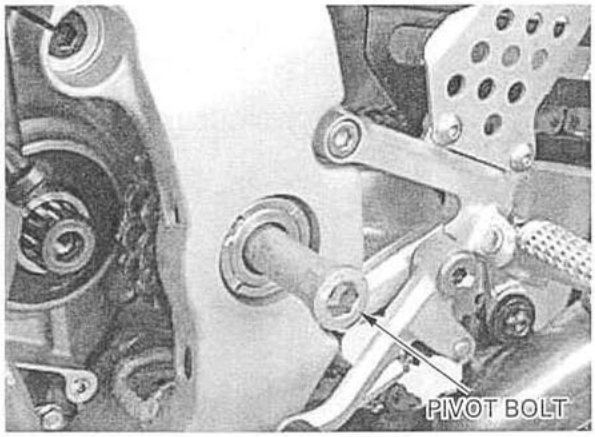

1. Tighten the right center engine hanger bolt.

   TORQUE: 64 N·m (6.5 kgf·m , 47 lbf·ft)

2. Tighten the rear upper engine hanger bolt.

   TORQUE: 64 N·m (6.5 kgf·m , 47 lbf·ft)

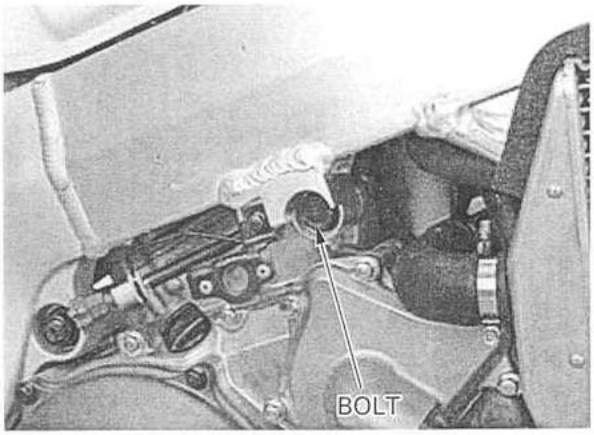

3. Tighten the swingarm right pivot adjusting bolt.

   TORQUE: 15 N·m (1.5 kgf·m , 11 lbf·ft)

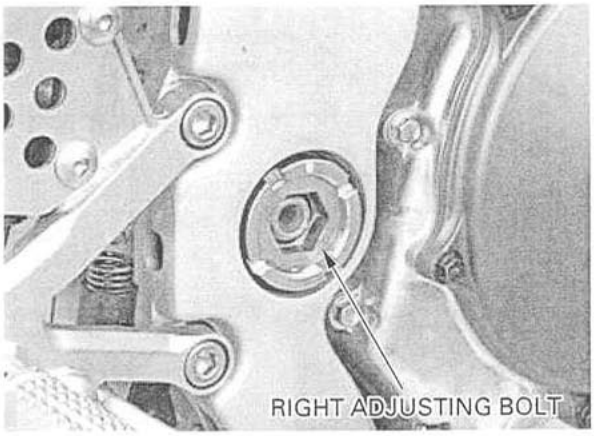

4. Hold the swingarm right pivot adjusting bolt and tighten the right lock nut, using the special tool.

   TOOL:
   Lock nut wrench, 5.8 × 46 mm 07YMA-MCF0100 or 07YMA-MCFA100 (U.S.A. only)

   TORQUE: Actual: 64 N·m (6.5 kgf·m , 47 lbf·ft)
   Indicated: 58 N·m (5.9 kgf·m , 43 lbf·ft)

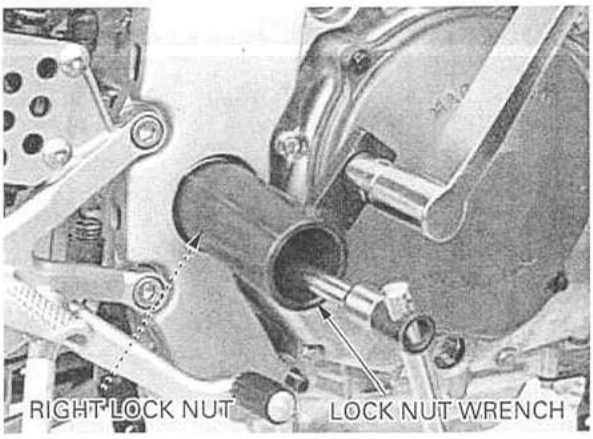

5. Tighten the swingarm left pivot adjusting bolt with the pivot bolt.

TORQUE: 15 N·m (1.5 kgf·m , 11 lbf·ft)

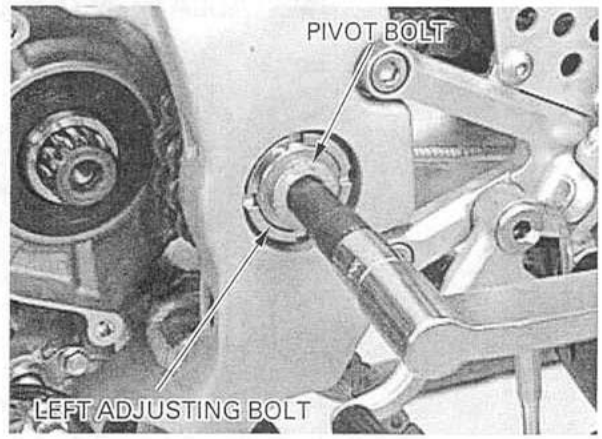

6. Hold the swingarm pivot bolt and tighten the left lock nut, using the special tool.

TOOL:
Lock nut wrench, 5.8 × 46 mm 07YMA-MCF0100 or 07YMA-MCFA100 (U.S.A. only)

TORQUE: Actual: 64 N·m (6.5 kgf·m , 47 lbf·ft)
Indicated: 58 N·m (5.9 kgf·m , 43 lbf·ft)

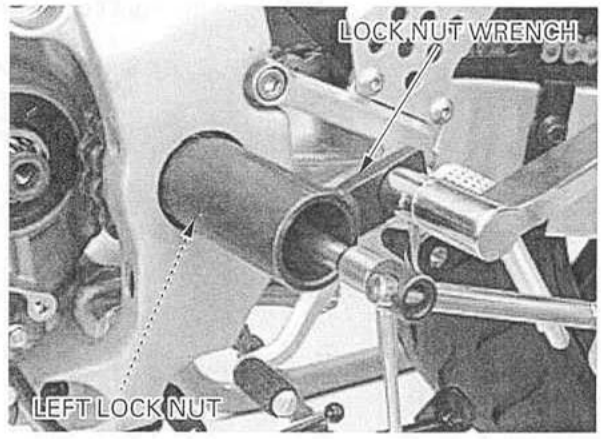

7. Install the washer and swingarm pivot nut, and tighten the nut.

TORQUE: 93 N·m (9.5 kgf·m , 69 lbf·ft)

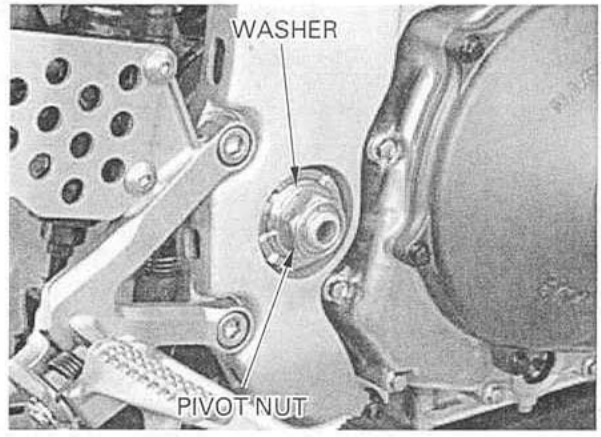

8. Tighten the left center engine hanger bolt.

TORQUE: 64 N·m (6.5 kgf·m , 47 lbf·ft)

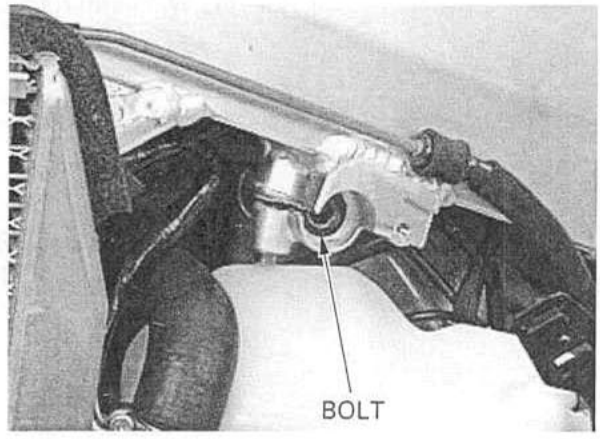

9. Tighten the engine hanger nuts, to the specified torque in the specified sequence as follows:
   - rear lower
   - front

   TORQUE:
   Front: 64 N·m (6.5 kgf·m , 47 lbf·ft)
   Rear lower: 39 N·m (4.0 kgf·m , 29 lbf·ft)

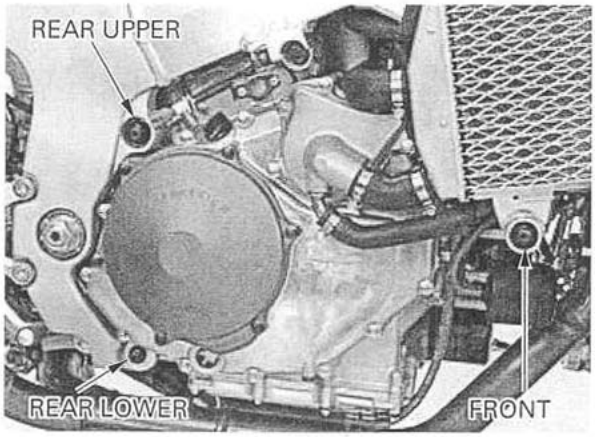

10. Tighten the engine hanger pinch bolts in the specified sequence as follows:
    - center
    - rear upper
    - rear lower

    Install the following:
    - drive sprocket (page 7-20)
    - fuse box bracket/clutch pipe clamp (page 7-19)

    Install the radiator reserve tank and radiator reserve tank mounting bolt and tighten the bolt.

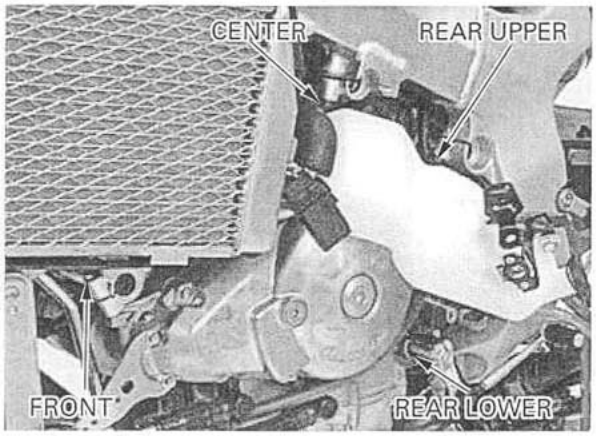

Install the shock arm-to-swingarm bolt and nut, and tighten the nut.

TORQUE: 44 N·m (4.5 kgf·m , 33 lbf·ft)

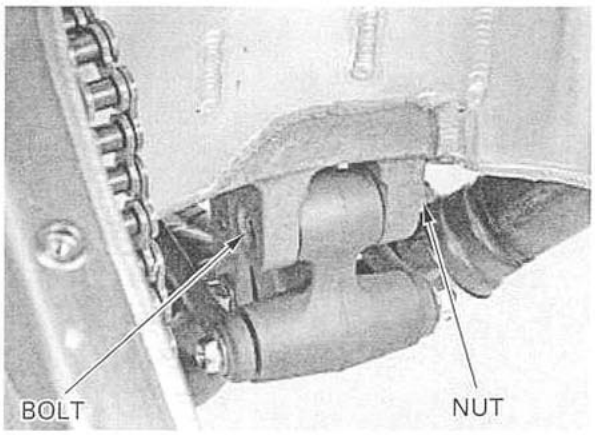

Install the following:
- rear brake caliper/bracket assembly
- rear brake hose clamp (page 14-12)

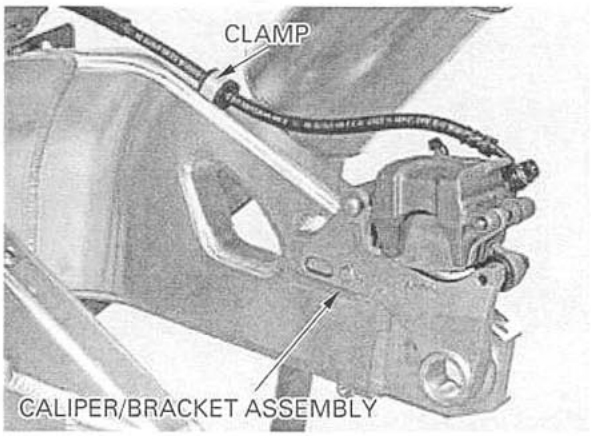

Install the drive chain cover A, bolt and trim clip.
Tighten the bolt.
Install the rear wheel (page 14-9).

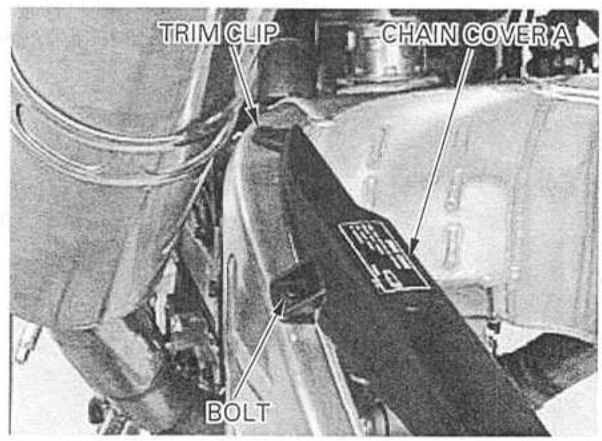

15. HYDRAULIC DISC BRAKE

SERVICE INFORMATION

GENERAL

⚠ CAUTION

Frequent inhalation of brake pad dust, regardless of material composition, could be hazardous to your health.
- Avoid breathing dust particles.
- Never use an air hose or brush to clean brake assemblies. Use an OSHA-approved vacuum cleaner.

- A contaminated brake disc or pad reduces stopping power. Discard contaminated pads and clean a contaminated disc with a high quality brake degreasing agent.
- Spilled brake fluid will severely damage the plastic parts and painted surfaces. It is also harmful to some rubber parts. Be careful whenever you remove the reservoir cap; make sure the reservoir is horizontal first.
- Never allow contaminants (dirt, water, etc.) to get into an open reservoir.
- Once the hydraulic system has been opened, or if the brake feels spongy, the system must be bled.
- Always use fresh DOT 4 brake fluid from a sealed container when servicing the system. Do not mix different types of fluid as they may not be compatible.
- Always check brake operation before riding the motorcycle.

SPECIFICATIONS

Unit: mm (in)

ITEM				STANDARD	SERVICE LIMIT
Front	Specified brake fluid			DOT 4	———
	Brake disc thickness		'00–'01	4.4–4.6 (0.17–0.18)	3.5 (0.14)
			After '01	4.9–5.1 (0.19–0.20)	4.0 (0.16)
	Brake disc runout			———	0.30 (0.012)
	Master cylinder I.D.		'00–'01	19.050–19.093 (0.7500–0.7517)	19.105 (0.7522)
			After '01	17.460–17.503 (0.6874–0.6891)	17.515 (0.6896)
	Master piston O.D.		'00–'01	19.018–19.043 (0.7487–0.7497)	19.006 (0.7483)
			After '01	17.321–17.367 (0.6819–0.6837)	17.309 (0.6815)
	Caliper cylinder I.D.	A	'00–'01	33.96–34.01 (1.337–1.339)	34.02 (1.339)
			After '01	32.030–32.080 (1.2610–1.2630)	32.092 (1.2635)
		B	'00–'01	32.030–32.080 (1.2610–1.2630)	32.090 (1.2634)
			After '01	30.230–30.280 (1.1902–1.1921)	30.292 (1.1926)
	Caliper piston O.D.	A	'00–'01	33.878–33.928 (1.3338–1.3357)	33.87 (1.333)
			After '01	31.965–31.998 (1.2585–1.2598)	31.953 (1.2580)
		B	'00–'01	31.948–31.998 (1.2578–1.2598)	31.94 (1.257)
			After '01	30.165–30.198 (1.1876–1.1889)	30.153 (1.1871)
Rear	Specified brake fluid			DOT 4	———
	Brake disc thickness			4.8–5.2 (0.19–0.20)	4.0 (0.16)
	Brake disc runout			———	0.30 (0.012)
	Master cylinder I.D.			14.000–14.043 (0.5512–0.5529)	14.055 (0.5533)
	Master piston O.D.			13.957–13.984 (0.5495–0.5506)	13.945 (0.5490)
	Caliper cylinder I.D.			38.18–38.23 (1.503–1.505)	38.24 (1.506)
	Caliper piston O.D.			38.098–38.148 (1.4999–1.5019)	38.09 (1.500)

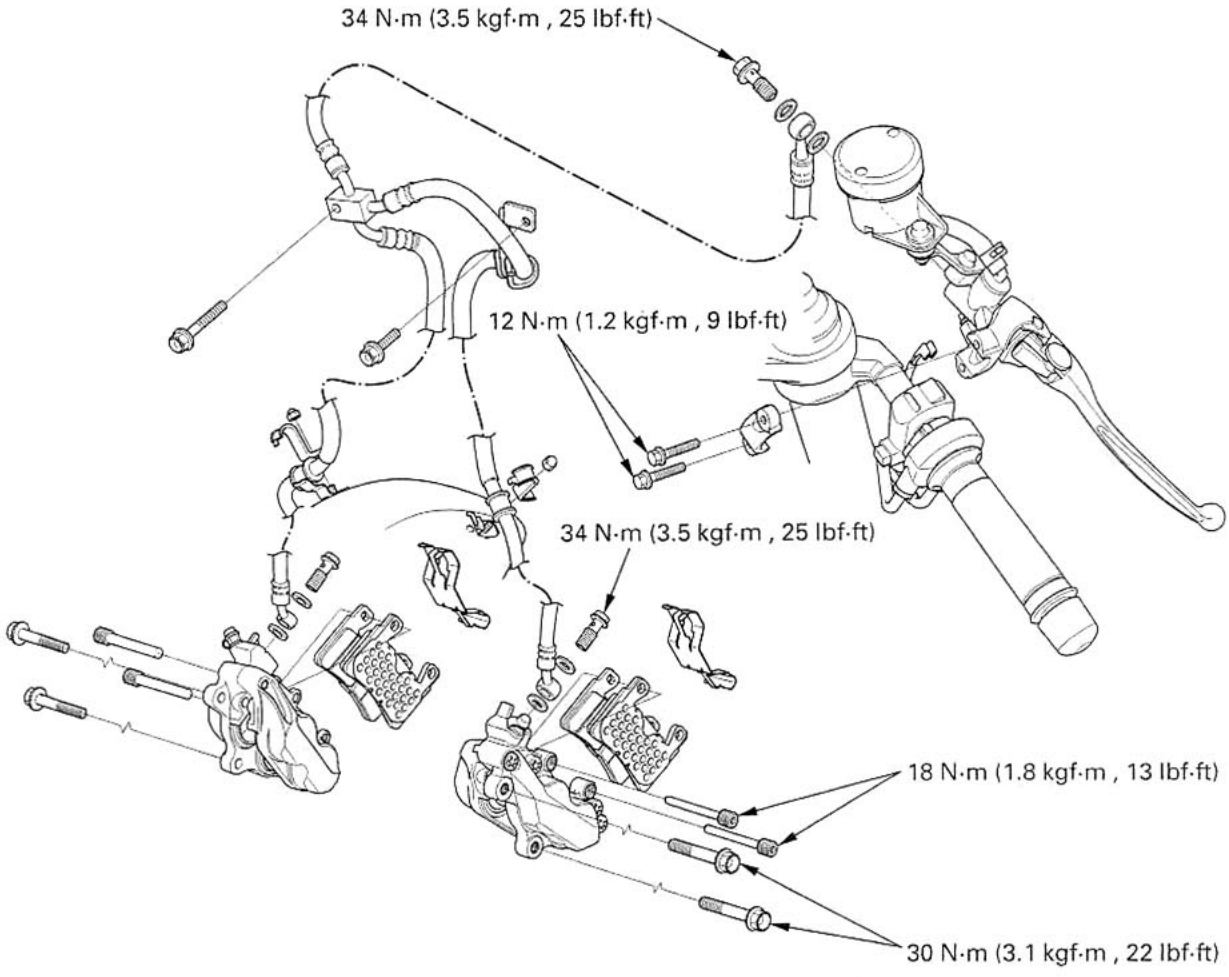
34 N·m (3.5 kgf·m , 25 lbf·ft)
12 N·m (1.2 kgf·m , 9 lbf·ft)
34 N·m (3.5 kgf·m , 25 lbf·ft)
18 N·m (1.8 kgf·m , 13 lbf·ft)
30 N·m (3.1 kgf·m , 22 lbf·ft)

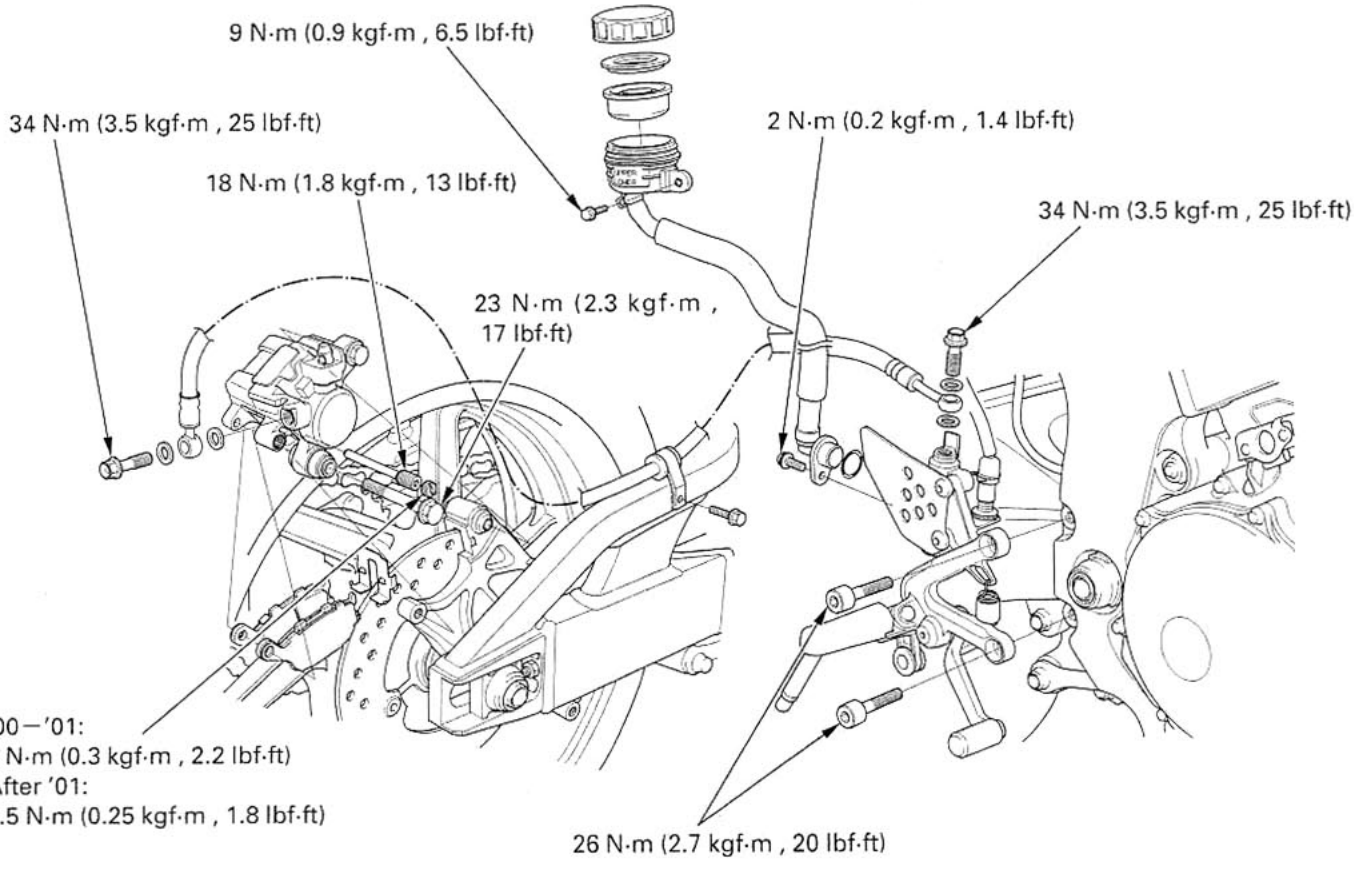
9 N·m (0.9 kgf·m , 6.5 lbf·ft)
34 N·m (3.5 kgf·m , 25 lbf·ft)
2 N·m (0.2 kgf·m , 1.4 lbf·ft)
18 N·m (1.8 kgf·m , 13 lbf·ft)
34 N·m (3.5 kgf·m , 25 lbf·ft)
23 N·m (2.3 kgf·m , 17 lbf·ft)
'00 – '01:
3 N·m (0.3 kgf·m , 2.2 lbf·ft)
After '01:
2.5 N·m (0.25 kgf·m , 1.8 lbf·ft)
26 N·m (2.7 kgf·m , 20 lbf·ft)

TORQUE VALUES

Brake caliper bleed valve		6 N·m (0.6 kgf·m , 4.3 lbf·ft)	
Front brake reservoir cap screw		2 N·m (0.2 kgf·m , 1.4 lbf·ft)	
Rear brake caliper pad pin plug	('00 – '01)	3 N·m (0.3 kgf·m , 2.2 lbf·ft)	
	(After '01)	2.5 N·m (0.25 kgf·m , 1.8 lbf·ft)	
Pad pin		18 N·m (1.8 kgf·m , 13 lbf·ft)	
Brake hose oil bolt		34 N·m (3.5 kgf·m , 25 lbf·ft)	
Front brake lever pivot bolt		1 N·m (0.1 kgf·m , 0.7 lbf·ft)	
Front brake lever pivot nut		6 N·m (0.6 kgf·m , 4.3 lbf·ft)	
Front brake reservoir mounting nut		6 N·m (0.6 kgf·m , 4.3 lbf·ft)	U-nut
Front brake reservoir stay bolt		12 N·m (1.2 kgf·m , 9 lbf·ft)	
Front brake light switch screw	('00 – '01)	1 N·m (0.1 kgf·m , 0.7 lbf·ft)	
	(After '01)	1.2 N·m (0.12 kgf·m , 0.9 lbf·ft)	
Front master cylinder holder bolt		12 N·m (1.2 kgf·m , 9 lbf·ft)	
Rear brake reservoir mounting bolt		9 N·m (0.9 kgf·m , 6.5 lbf·ft)	
Rear master cylinder mounting bolt		10 N·m (1.0 kgf·m , 7 lbf·ft)	
Rear master cylinder joint nut		18 N·m (1.8 kgf·m , 13 lbf·ft)	
Rear brake reservoir hose joint screw	('00 – '01)	2 N·m (0.2 kgf·m , 1.4 lbf·ft)	Apply locking agent to the threads.
	(After '01)	1.5 N·m (0.15 kgf·m , 1.1 lbf·ft)	Apply locking agent to the threads.
Rider footpeg holder bolt		26 N·m (2.7 kgf·m , 20 lbf·ft)	
Front brake caliper mounting bolt		30 N·m (3.1 kgf·m , 22 lbf·ft)	Apply locking agent to the threads.
Front brake caliper assembly bolt		23 N·m (2.3 kgf·m , 17 lbf·ft)	Apply locking agent to the threads.
Rear brake caliper bolt		23 N·m (2.3 kgf·m , 17 lbf·ft)	

TOOL

Snap ring pliers	07914-SA50001 or 07914-3230001

TROUBLESHOOTING

Brake lever/pedal soft or spongy
- Air in hydraulic system
- Leaking hydraulic system
- Contaminated brake pad/disc
- Worn caliper piston seals
- Worn master cylinder piston cups
- Worn brake pad/disc
- Contaminated caliper
- Contaminated master cylinder
- Caliper not sliding properly
- Low brake fluid level
- Clogged fluid passage
- Warped/deformed brake disc
- Sticking/worn caliper piston
- Sticking/worn master piston
- Bent brake lever/pedal

Brake lever/pedal hard
- Clogged/restricted hydraulic system
- Sticking/worn caliper piston
- Sticking/worn master piston
- Caliper not sliding properly
- Bent brake lever/pedal

Brake drag
- Contaminated brake pad/disc
- Misaligned wheel
- Badly worn brake pad/disc
- Warped/deformed brake disc
- Caliper not sliding properly
- Clogged/restricted fluid passage
- Sticking caliper piston

If a brake bleeder is not available, use the following procedure:
Pressurize the system with the brake lever or pedal until lever or pedal resistance is felt.

Connect a bleed hose to the bleed valve and bleed the system as follows:

1. Squeeze the brake lever or depress the brake pedal, open the bleed valve 1/2 turn and then close it.

NOTE:

- Do not release the brake lever or pedal until the bleed valve has been closed.

2. Release brake lever or pedal slowly and wait several seconds after it reaches the end of its travel.

Repeat the steps 1 and 2 until air bubbles do not appear in the bleed hose.

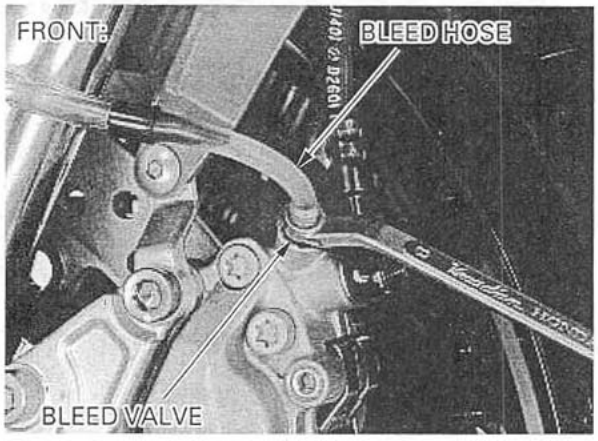

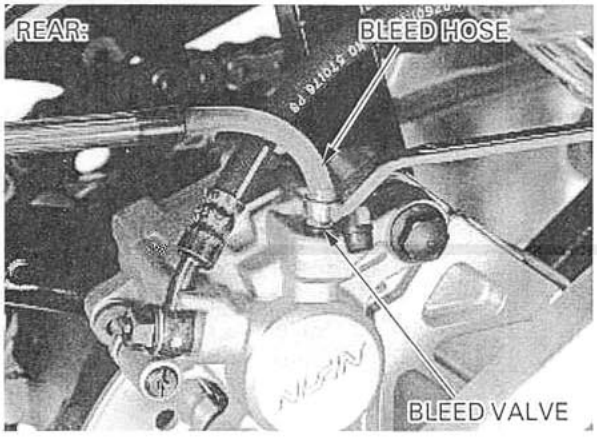

Tighten the bleed valve.

TORQUE: 6 N·m (0.6 kgf·m , 4.3 lbf·ft)

Fill the reservoir to the upper level line with DOT 4 brake fluid from a sealed container.

Install the diaphragm, set plate and reservoir cap (page 3-24).

BRAKE PAD/DISC

FRONT BRAKE PAD REPLACEMENT

Always replace the brake pads in pairs to ensure even disc pressure.

Remove the pad pins and pad spring.

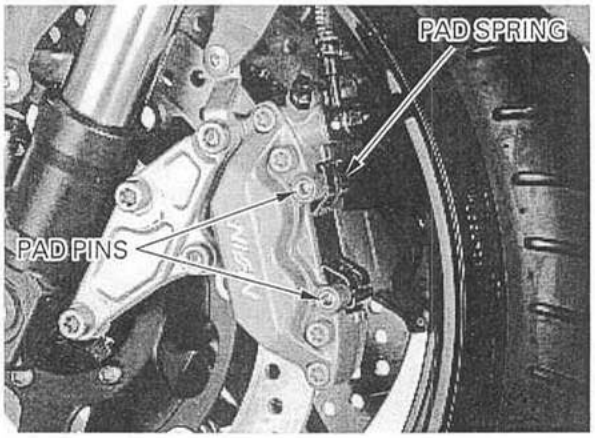

Check the brake fluid level in the brake reservoir as this operation causes the level to rise.

Push the caliper pistons all the way in to allow installation of new brake pads.

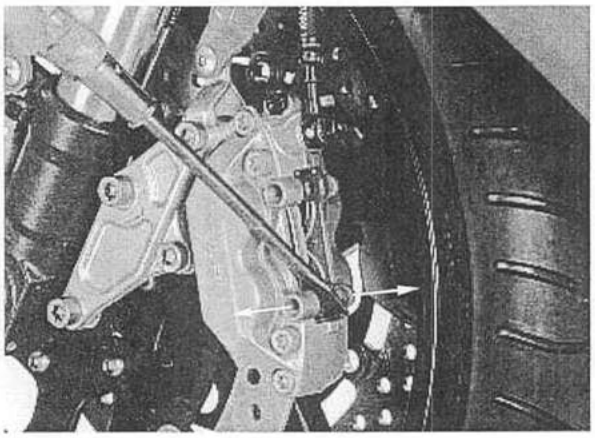

Replace the brake pads with new ones.

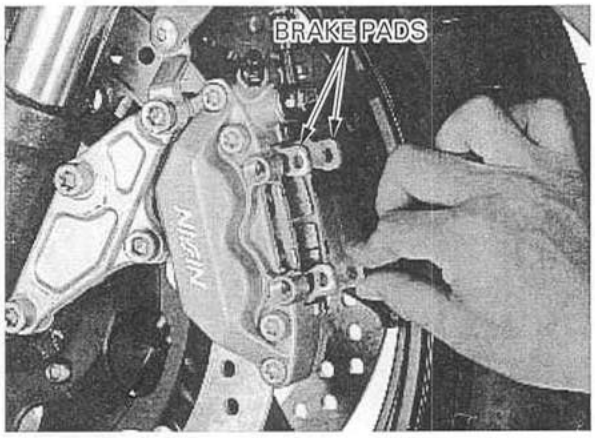

Install the pad spring and one pad pin.
Install the other pad pin while pushing in the pad spring.

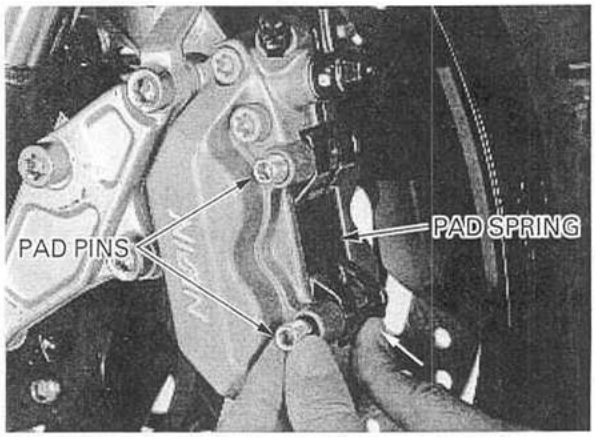

Remove the master cylinder holder bolts, holder and the master cylinder.

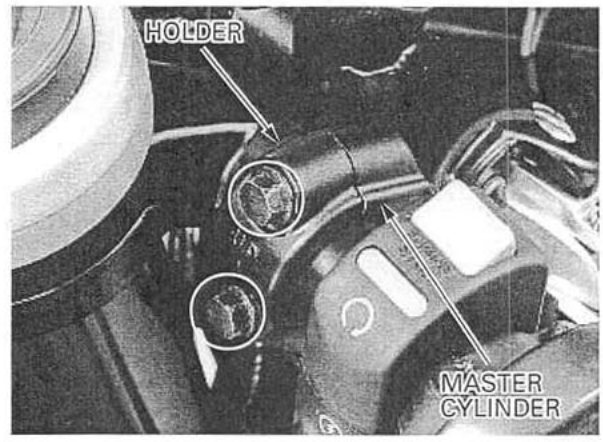

Remove the dust seal cap, snap ring and reservoir hose from the master cylinder.
Remove the O-ring.

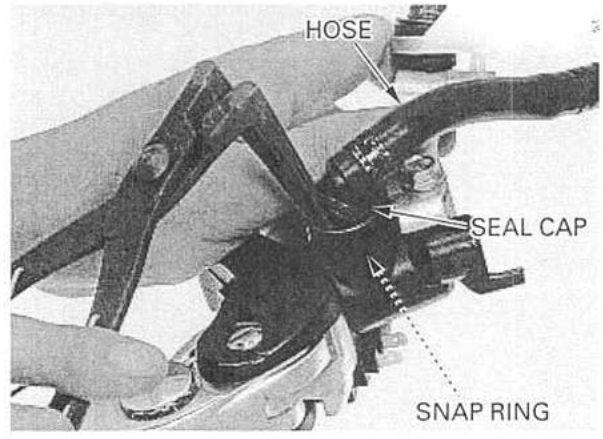

Remove the bolt and reservoir stay with the reservoir and hose.

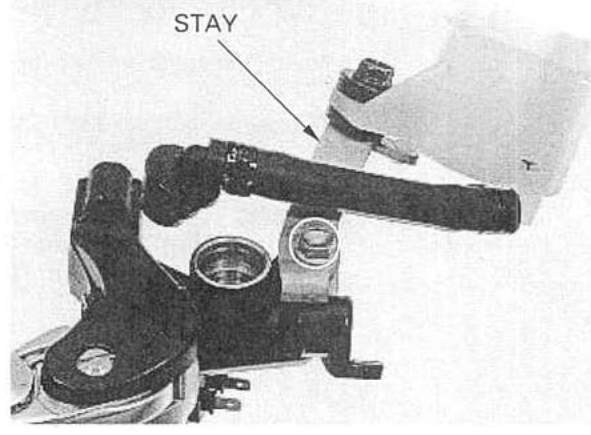

Remove the pivot nut, bolt and brake lever assembly.
Remove screw and brake light switch.

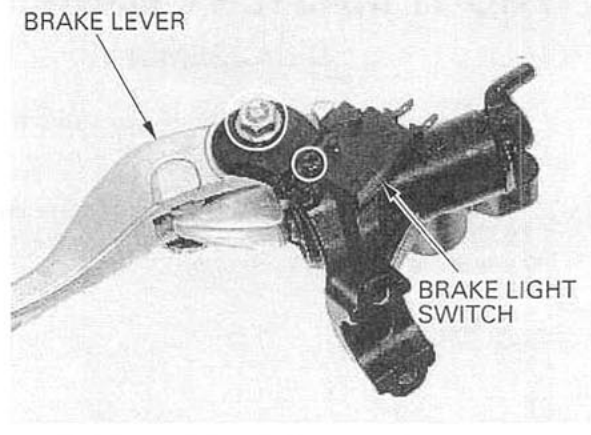

Remove the boot from the master cylinder and master piston.

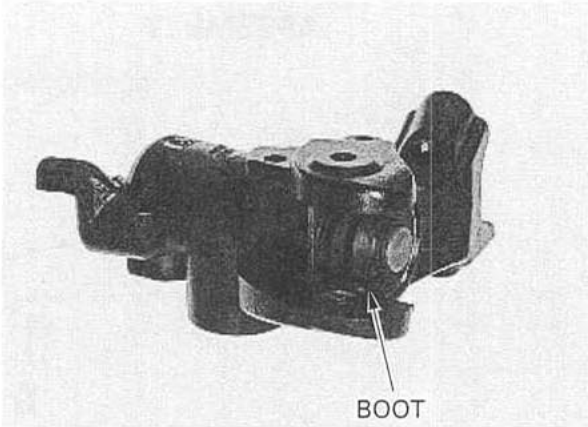

Remove the snap ring using the special tool.

TOOL:

Snap ring pliers	07914-SA50001 or 07914-3230001

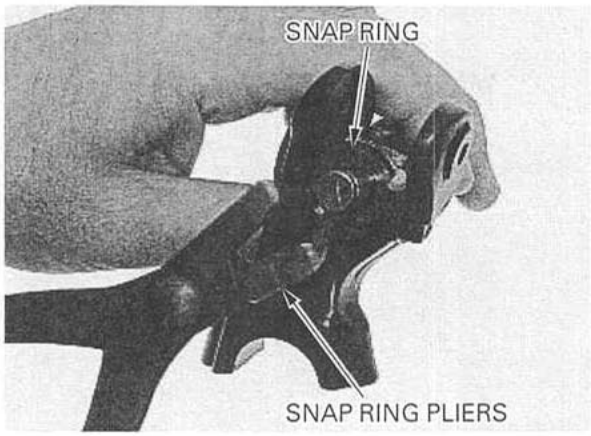

Remove the master piston and spring from the master cylinder.

Clean the master cylinder, reservoir and master piston in clean brake fluid.

INSPECTION

Check the piston cups for wear, deterioration or damage.
Check the spring for damage.

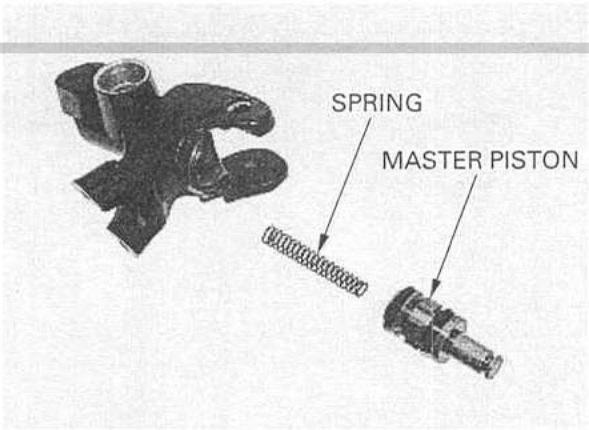

Check the master cylinder and piston for scoring, scratches or damage.

Measure the master cylinder I.D.

SERVICE LIMIT:
'00 – '01: 19.105 mm (0.7522 in)
After '01: 17.515 mm (0.6896 in)

Measure the master piston O.D.

SERVICE LIMIT:
'00 – '01: 19.006 mm (0.7483 in)
After '01: 17.309 mm (0.6815 in)

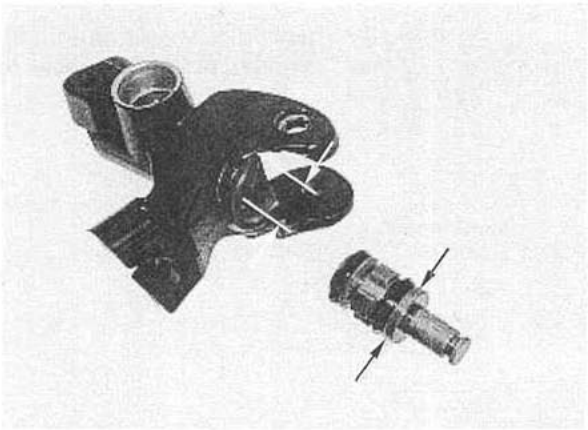

ASSEMBLY

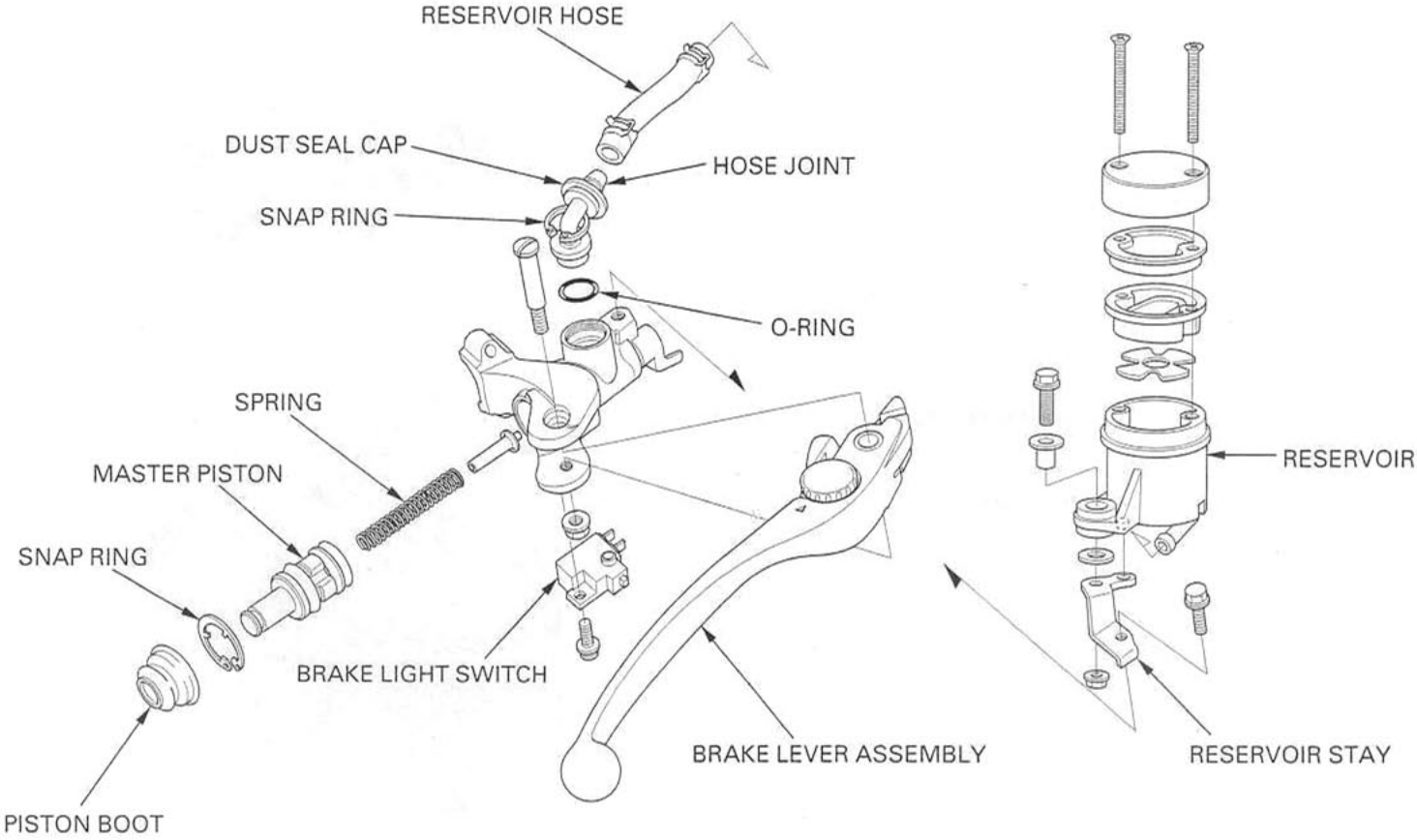

Do not allow the piston cup lips to turn inside out.

Coat the master piston and piston cups with clean brake fluid.
Install the spring into the master piston.
Install the spring and master piston into the master cylinder.

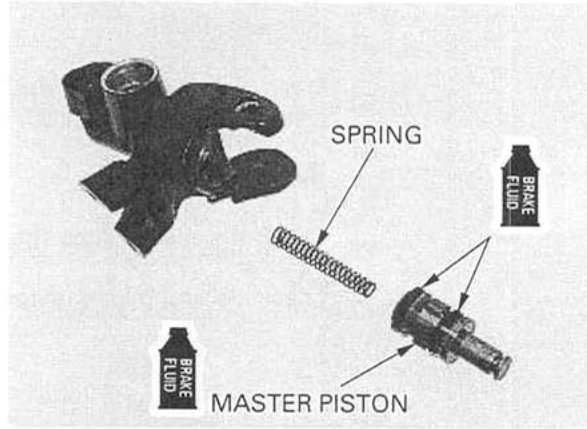

Be certain the snap ring is firmly seated in the groove.

Install the snap ring into the groove in the master cylinder, using the special tool.

TOOL:

Snap ring pliers	07914-SA50001 or 07914-3230001

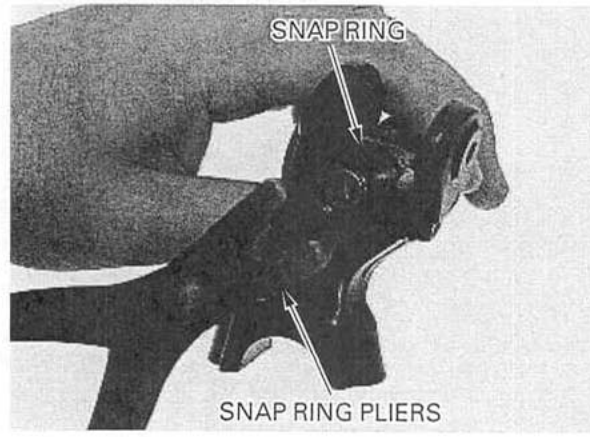

Install the boot onto the piston and into the master cylinder.
Apply silicone grease to the brake lever contacting area of the master piston.

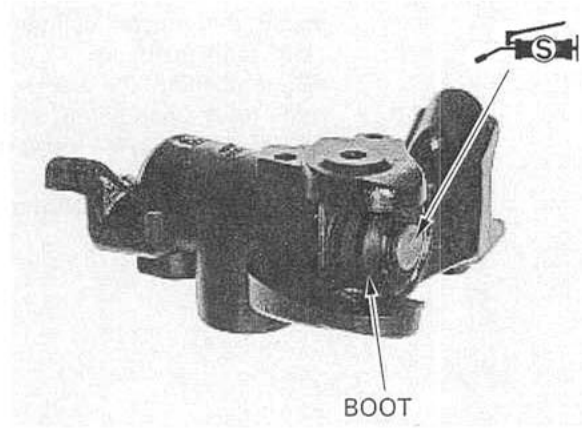

Apply silicone grease to the pivot bolt sliding surface.
Install the brake lever assembly.
Install and tighten the pivot bolt.

TORQUE: 1 N·m (0.1 kgf·m , 0.7 lbf·ft)

Install and tighten the pivot nut.

TORQUE: 6 N·m (0.6 kgf·m , 4.3 lbf·ft)

Install the front brake light switch and tighten the screw.

TORQUE: **'00 – '01:** 1 N·m (0.1 kgf·m , 0.7 lbf·ft)
After '01: 1.2 N·m (0.12 kgf·m , 0.9 lbf·ft)

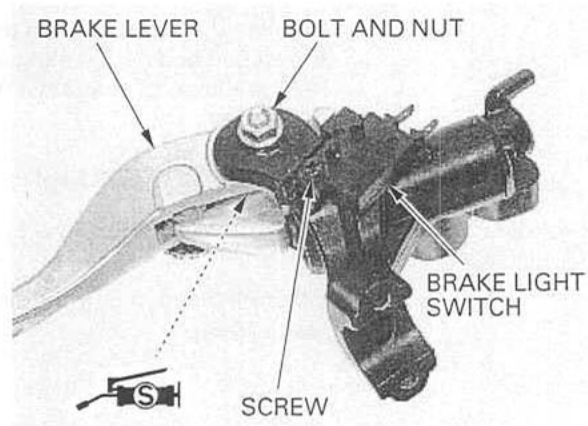

Install the reservoir stay onto the master cylinder and tighten the bolt.

TORQUE: 12 N·m (1.2 kgf·m , 9 lbf·ft)

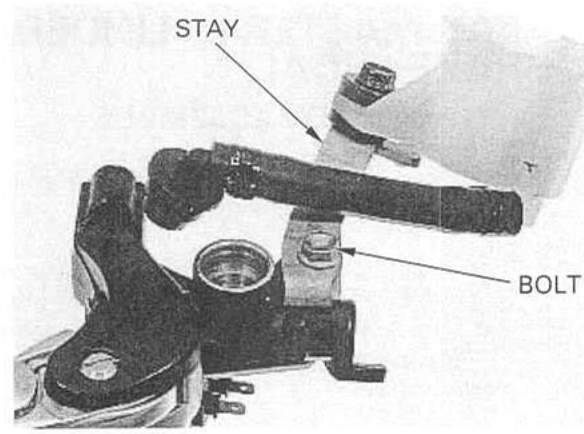

Coat a new O-ring with brake fluid and install it into the master cylinder.
Install the reservoir hose joint, secure it with the snap ring and install the dust seal cap.

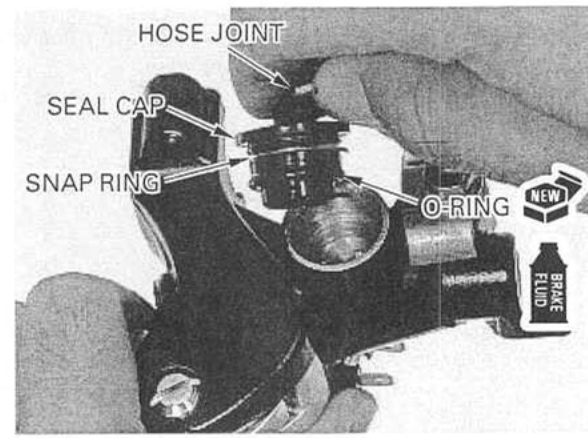

Install the master cylinder and holder with the "UP" mark facing up.
Align the end of the master cylinder with the punch mark on the handlebar, and tighten the upper bolt first, then tighten the lower bolt.

TORQUE: 12 N·m (1.2 kgf·m , 9 lbf·ft)

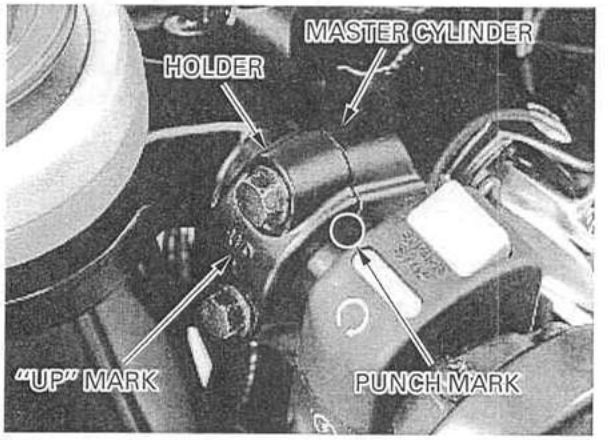

Connect the brake hose to the master cylinder with the oil bolt and new sealing washers.
Rest the hose joint against the stopper and tighten the oil bolt.

TORQUE: 34 N·m (3.5 kgf·m , 25 lbf·ft)

Connect the front brake light switch connectors.

Fill and bleed the front brake hydraulic system (page 15-3).

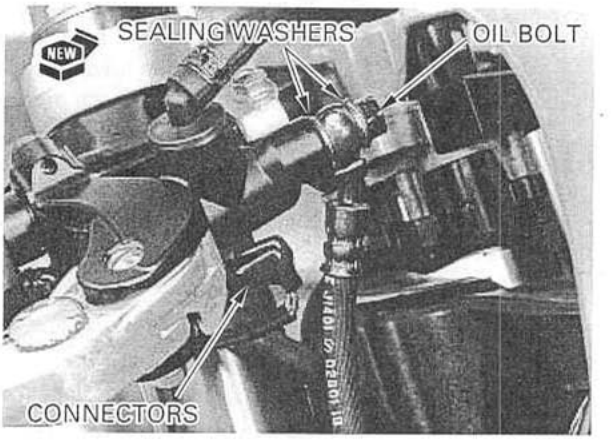

REAR MASTER CYLINDER/ BRAKE PEDAL

DISASSEMBLY

Drain the brake fluid from the rear brake hydraulic system (page 15-3).

When removing the oil bolt, cover the end of the hose to prevent contamination.

Disconnect the brake hose from the master cylinder by removing the oil bolt and sealing washers.
Loosen the master cylinder mounting bolts.

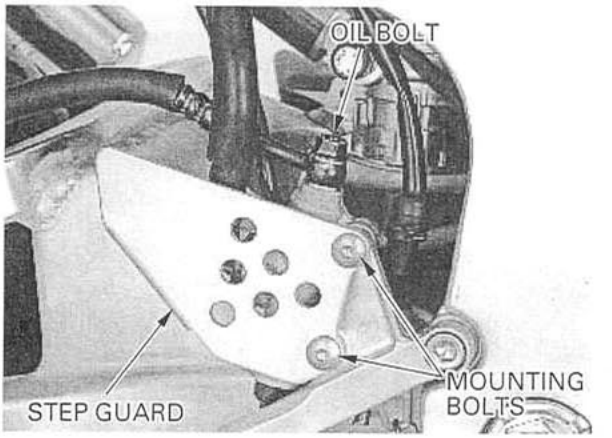

Remove the right muffler lower mounting nut, bolt and washer.
Remove the two socket bolts and right driver footpeg holder.

Remove the master cylinder mounting bolts and step guard.

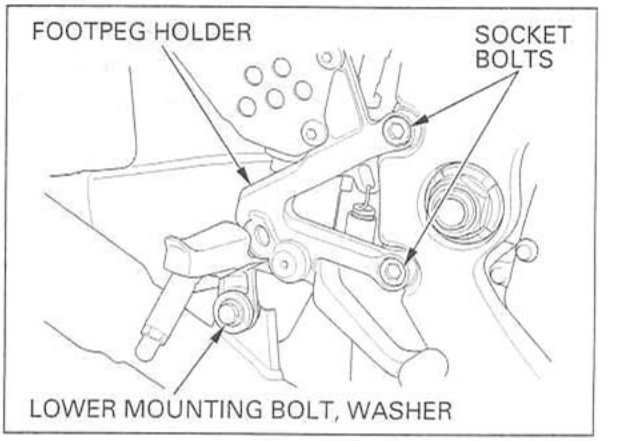

Remove the snap ring, washer and brake pedal from the pedal pivot shaft.
Unhook the return spring and switch spring from the brake pedal.
Remove the cotter pin, joint pin and the master cylinder from the brake pedal.

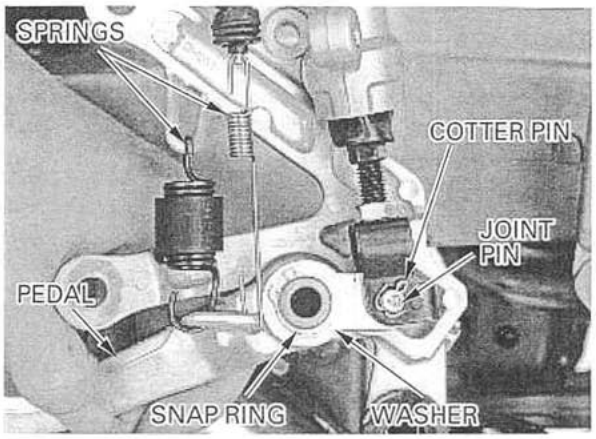

Remove the screw and reservoir hose joint from the master cylinder.
Remove the O-ring.

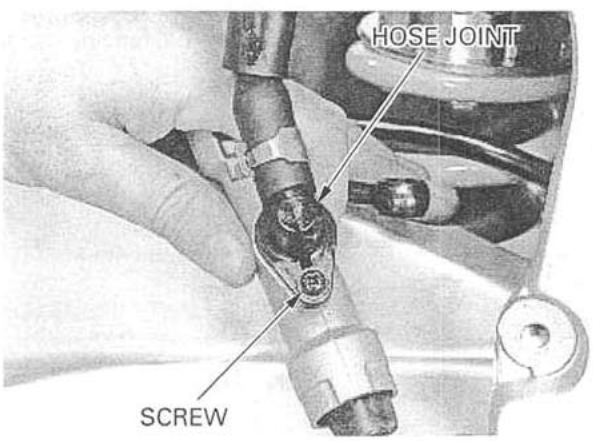

Remove the boot from the master cylinder.

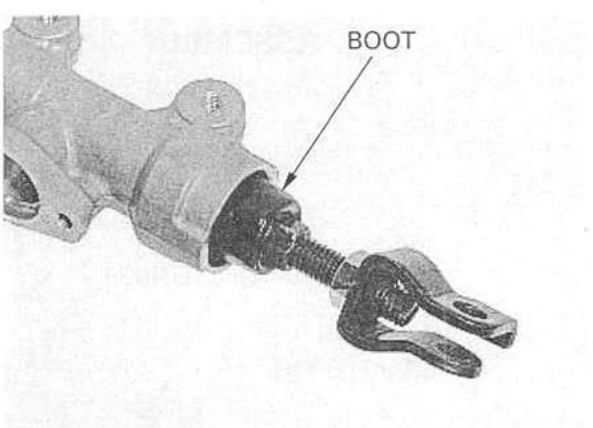

Remove the snap ring using the special tool.

TOOL:

Snap ring pliers	07914-SA50001 or 07914-3230001

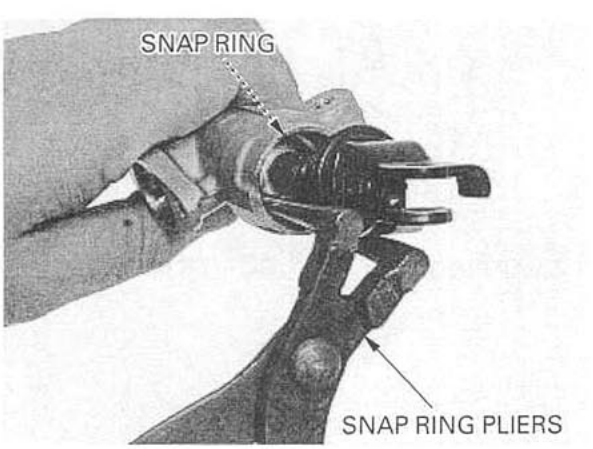

Remove the master piston, primary cup and spring.

Clean the master cylinder, reservoir and master piston in clean brake fluid.

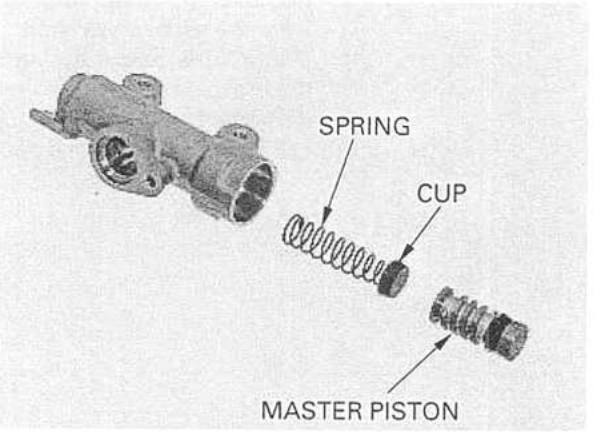

INSPECTION

Check the piston cups for wear, deterioration or damage.
Check the spring for damage.

Check the master cylinder and piston for scoring or damage.

Measure the master cylinder I.D.

SERVICE LIMIT: 14.055 mm (0.5533 in)

Measure the master piston O.D.

SERVICE LIMIT: 13.945 mm (0.5490 in)

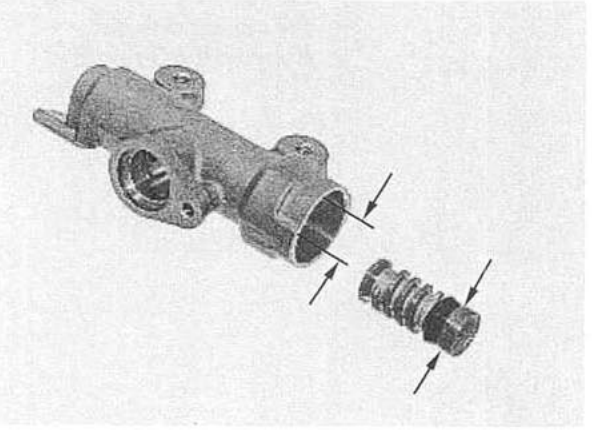

ASSEMBLY

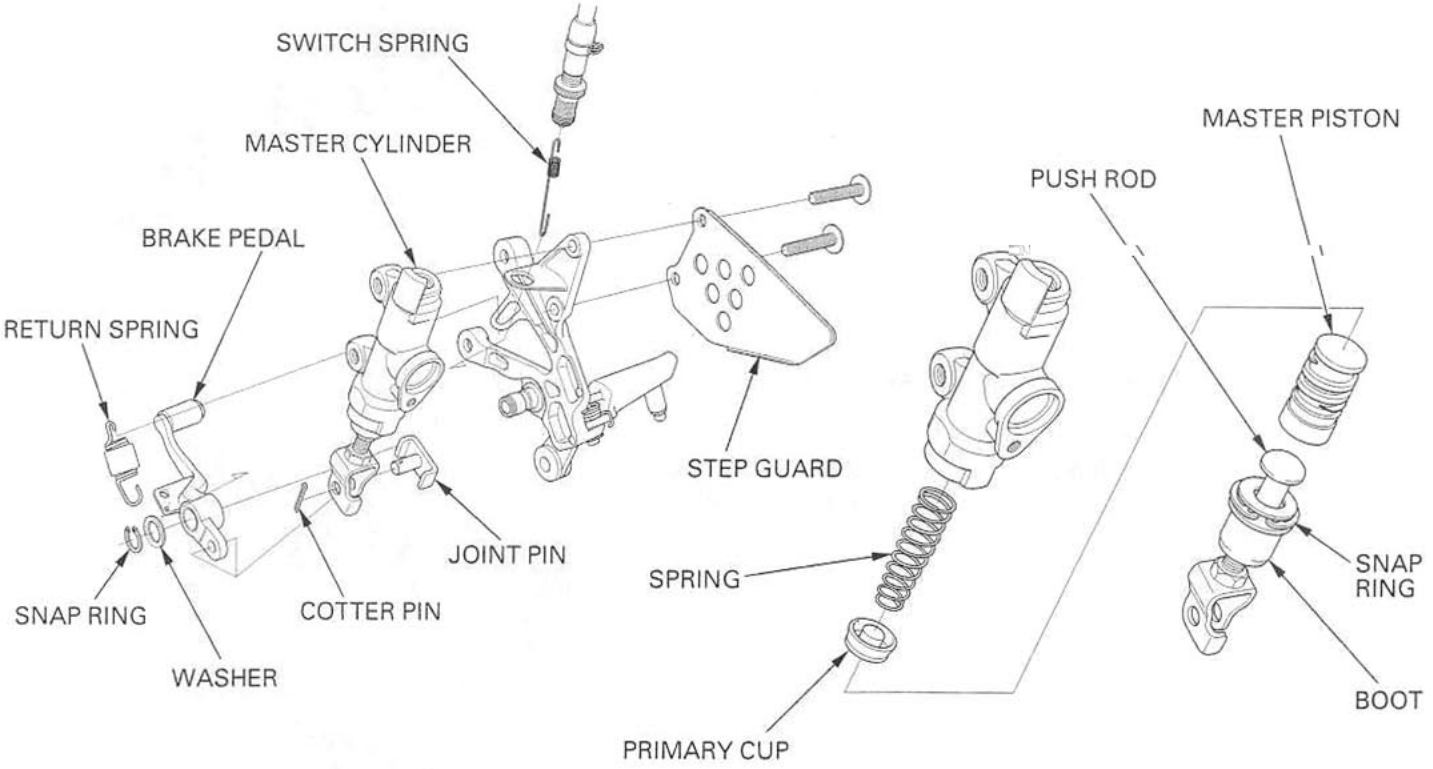

Coat the master piston and piston cups with clean brake fluid.
Install the spring onto the primary cup.
Install the spring, primary cup and master piston into the master cylinder.

Do not allow the piston cup lips to turn inside out.

Apply silicone grease to the push rod contacting area of the master piston.

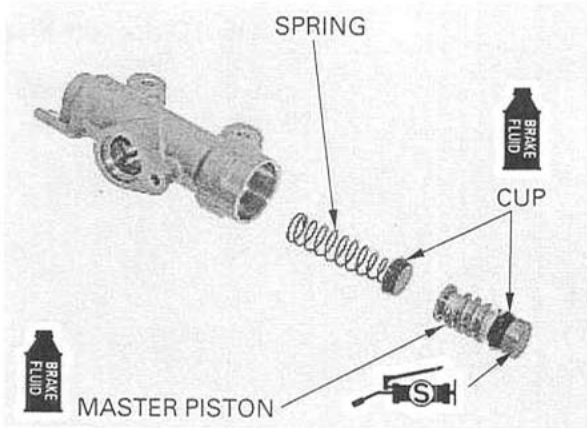

Install the push rod into the master cylinder.
Install the snap ring into the groove in the master cylinder, using the special tool.

Be certain the snap ring is firmly seated in the groove.

TOOL:

Snap ring pliers	07914-SA50001 or 07914-3230001

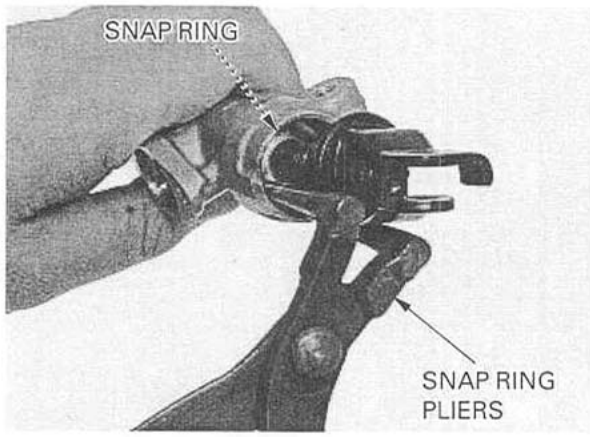

Install the boot into the master cylinder.

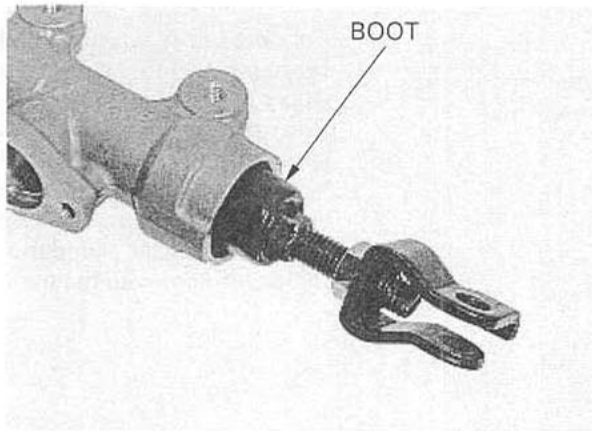

If the push rod joint is reinstalled, adjust the push rod length so the distance between the centers of the master cylinder lower mounting bolt hole and joint pin hole is 77 mm (3.0 in). After adjustment, tighten the joint nut.

TORQUE: 18 N·m (1.8 kgf·m , 13 lbf·ft)

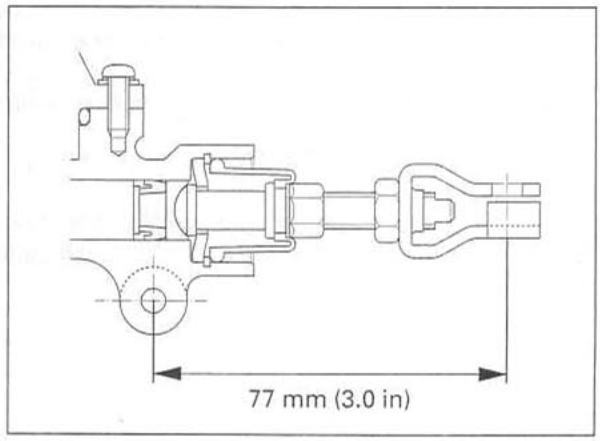

Coat a new O-ring with brake fluid and install it into the master cylinder.
Install the reservoir hose joint onto the master cylinder.

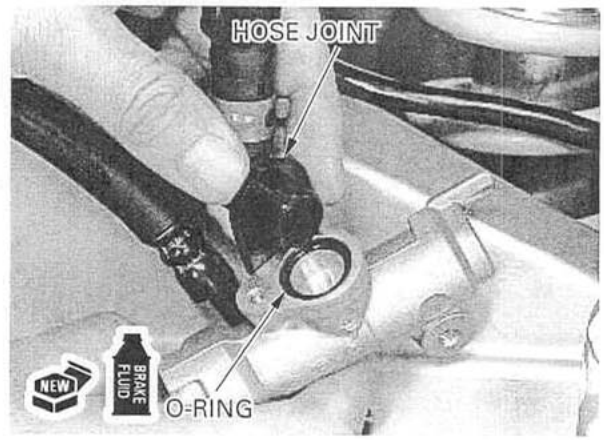

Apply locking agent to the hose joint screw threads.
Install and tighten the screw.

TORQUE: '00 – '01: 2 N·m (0.2 kgf·m , 1.4 lbf·ft)
After '01: 1.5 N·m (0.15 kgf·m , 1.1 lbf·ft)

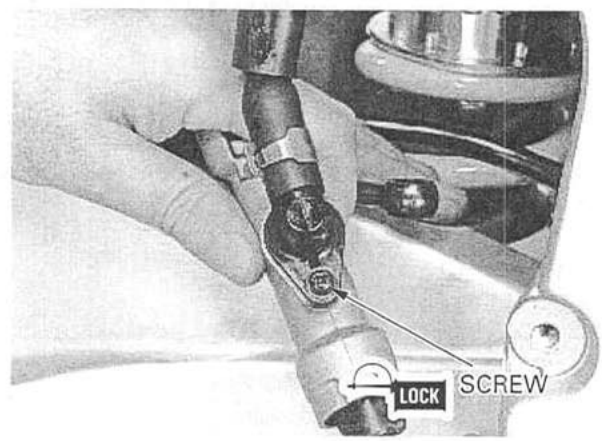

Connect the master cylinder push rod joint to the brake pedal with the joint pin and a new cotter pin.
Apply grease to the brake pedal pivot.
Hook the rear brake light switch spring and return spring to the brake pedal.
Install the brake pedal onto the pivot shaft and secure it with the washer and snap ring.
Install the master cylinder and step guard onto the footpeg holder with the mounting bolts.

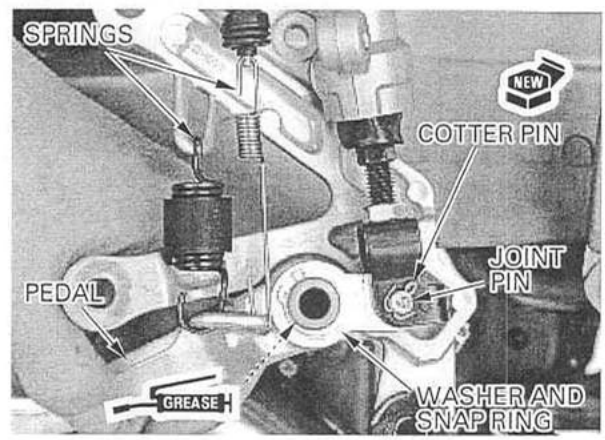

Install the right footpeg holder onto the frame and muffler.
Tighten the two socket bolts.

TORQUE: 26 N·m (2.7 kgf·m , 20 lbf·ft)

Install the right muffler lower mounting bolt with the washer and nut, and tighten the nut securely.

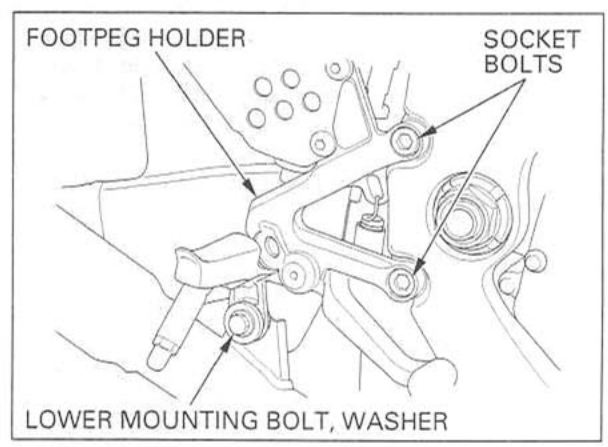

Tighten the master cylinder mounting bolts.

TORQUE: 10 N·m (1.0 kgf·m , 7 lbf·ft)

Connect the brake hose to the master cylinder with the oil bolt and new sealing washers.
Rest the hose joint against the stopper and tighten the oil bolt.

TORQUE: 34 N·m (3.5 kgf·m , 25 lbf·ft)

Fill and bleed the rear brake hydraulic system (page 15-3).

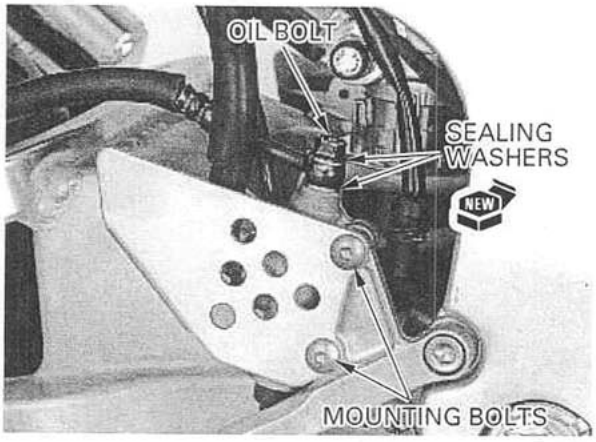

FRONT BRAKE CALIPER

DISASSEMBLY

Drain the brake fluid from the front brake hydraulic system (page 15-3).
Remove the front brake pads (page 15-5).

Disconnect the brake hose from the front brake caliper by removing the oil bolt and sealing washers.
Remove the two mounting bolts and the brake caliper.

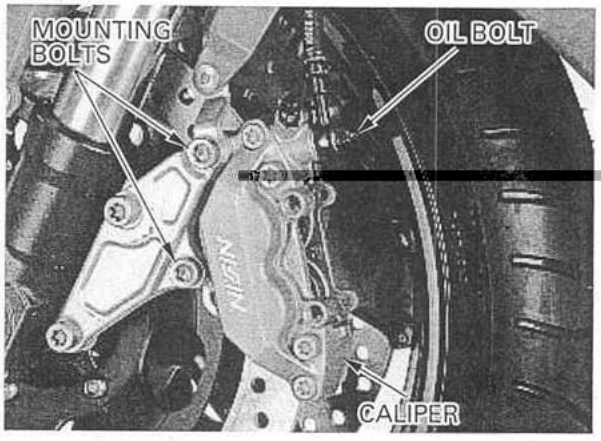

Do not use high pressure air or bring the nozzle too close to the inlet.

Install a corrugated cardboard or soft wood sheet between the pistons.
Apply small squirts of air pressure to the fluid inlet to remove the pistons.

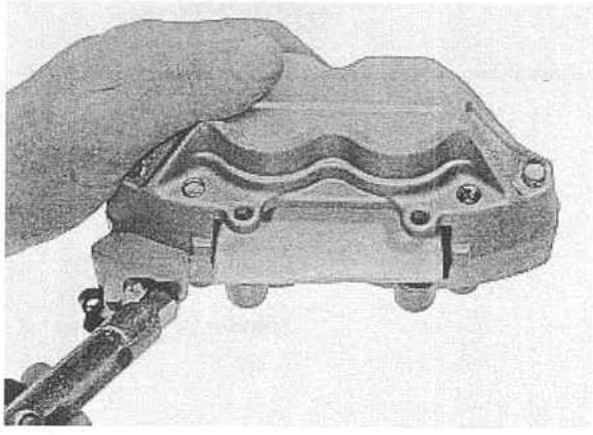

Remove the four caliper assembly bolts and separate the caliper body halves.

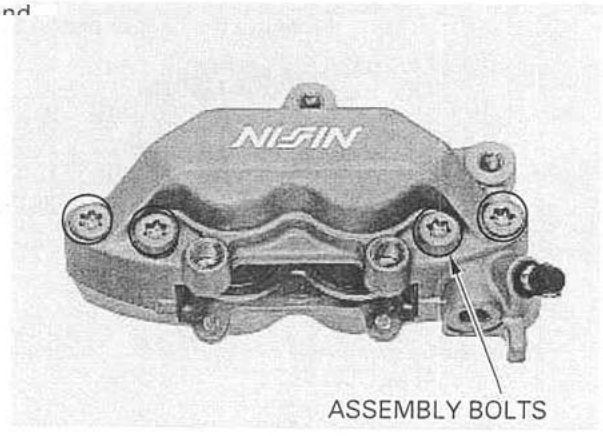

Remove the following:
- joint seal
- caliper pistons A
- caliper pistons B

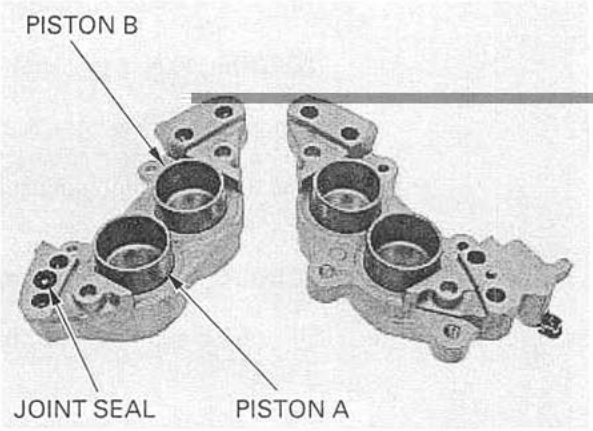

Be careful not to damage the piston sliding surface.

Push the dust and piston seals in and lift them out.

Clean the seal grooves, caliper cylinders and pistons with clean brake fluid.

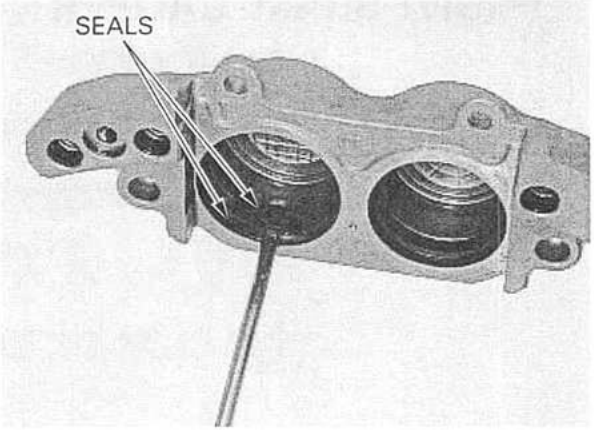

INSPECTION

Check the caliper cylinders and pistons for scoring, scratches or damage.

Measure the caliper cylinder I.D.

SERVICE LIMITS:

Cylinder A:	**'00–'01:**	34.02 mm (1.339 in)
	After '01:	32.092 mm (1.2635 in)
Cylinder B:	**'00–'01:**	32.090 mm (1.2634 in)
	After '01:	30.292 mm (1.1926 in)

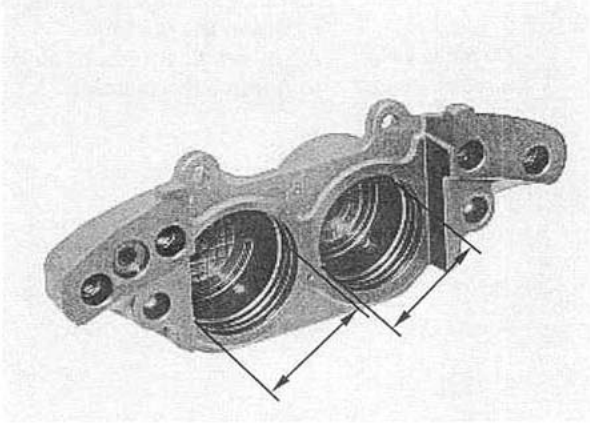

Measure the caliper piston O.D.

SERVICE LIMITS:

Piston A:	**'00–'01:**	33.87 mm (1.333 in)
	After '01:	31.953 mm (1.2580 in)
Piston B:	**'00–'01:**	31.94 mm (1.257 in)
	After '01:	30.153 mm (1.1871 in)

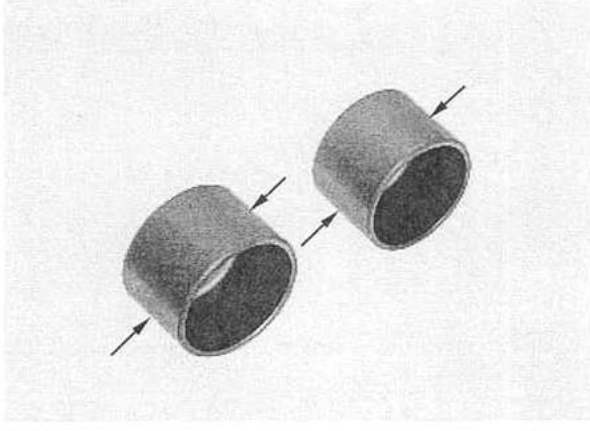

Apply locking agent to the caliper mounting bolt threads.
Install the brake caliper onto the caliper bracket and tighten the mounting bolts.

TORQUE: 30 N·m (3.1 kgf·m , 22 lbf·ft)

Install the brake pads (page 15-5).

Connect the brake hose to the brake caliper with the oil bolt and new sealing washers.
Rest the hose joint against the stopper and tighten the oil bolt.

TORQUE: 34 N·m (3.5 kgf·m , 25 lbf·ft)

Fill and bleed the front brake hydraulic system (page 15-3).

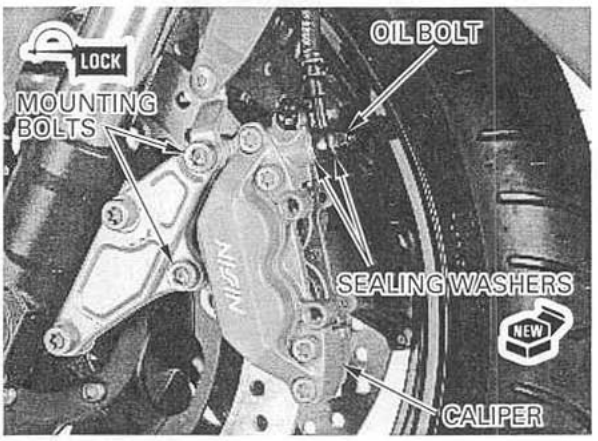

REAR BRAKE CALIPER

DISASSEMBLY

Drain the brake fluid from the rear brake hydraulic system (page 15-3).

Disconnect the brake hose from the rear brake caliper by removing the oil bolt and sealing washers.

Remove the rear brake pads (page 15-6).

Remove the rear brake caliper from the bracket.

Remove the pad spring, collar and boot from the caliper body.

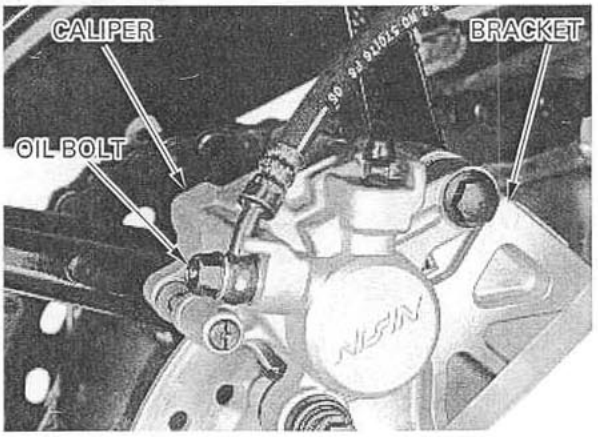

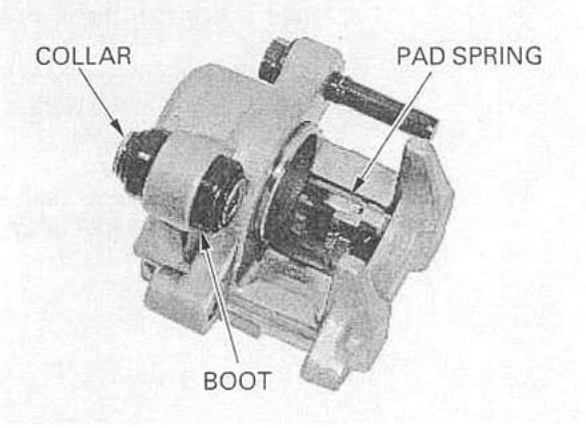

Do not use high pressure air or bring the nozzle too close to the inlet.

Place a shop towel over the piston.
Position the caliper body with the piston facing down and apply small amounts of air pressure to the fluid inlet to remove the piston.

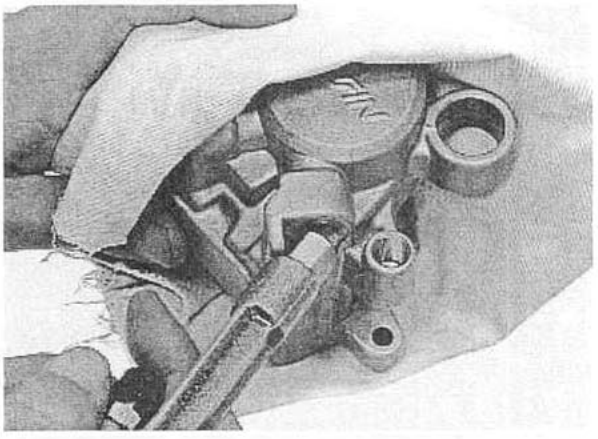

Be careful not to damage the piston sliding surface.

Push the dust and piston seals in and lift them out.

Clean the seal grooves, caliper cylinder and piston with clean brake fluid.

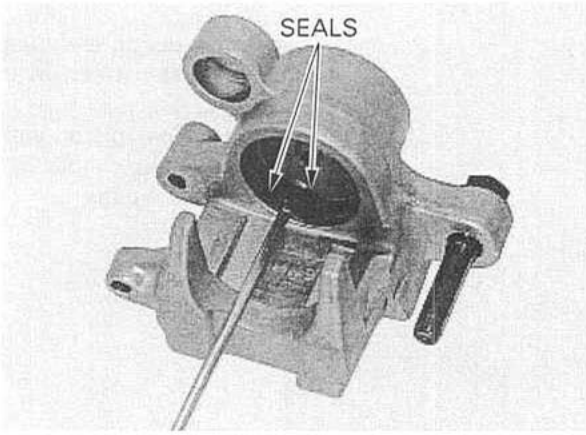

INSPECTION

Check the caliper cylinder and piston for scoring, scratches or damage.

Measure the caliper cylinder I.D.

SERVICE LIMIT: 38.24 mm (1.506 in)

Measure the caliper piston O.D.

SERVICE LIMIT: 38.09 mm (1.500 in)

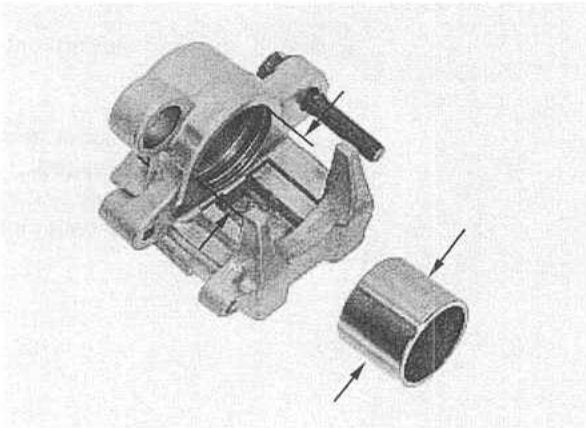

ASSEMBLY

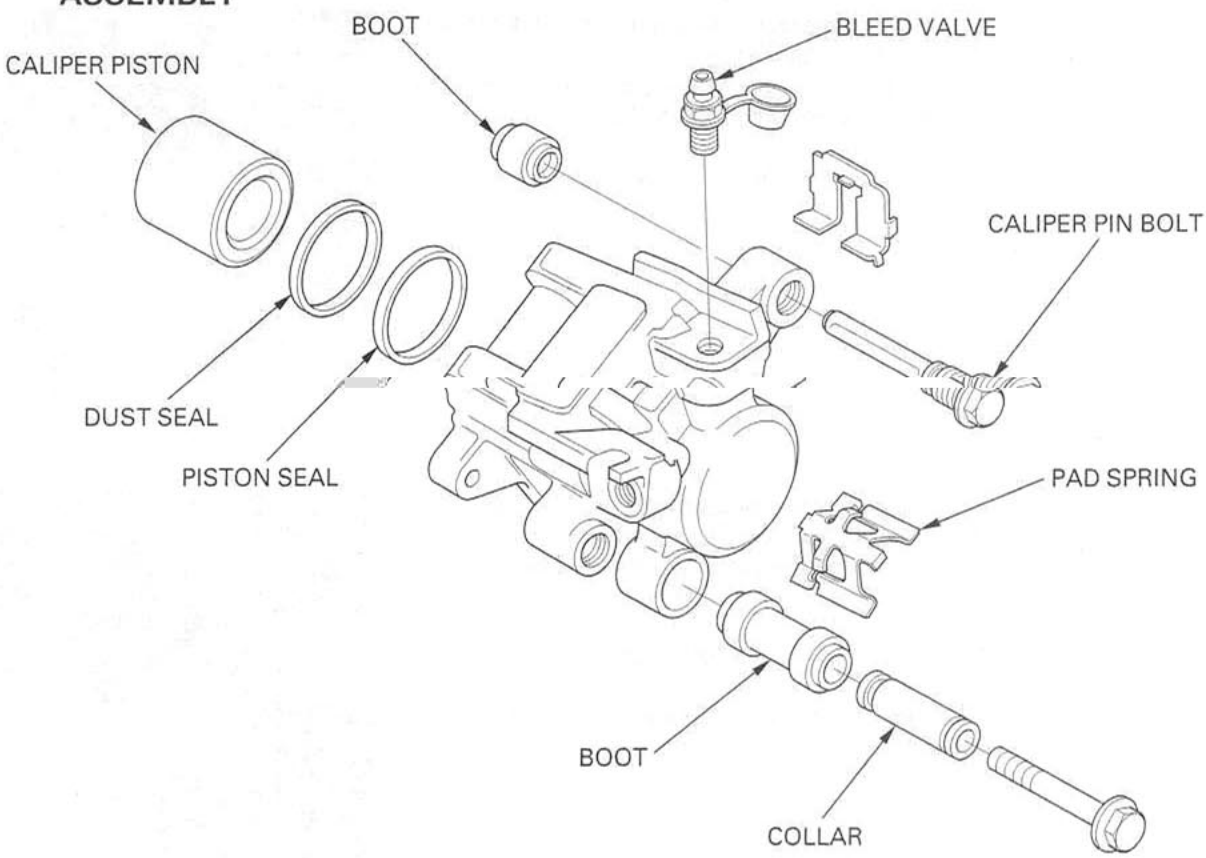

SPECIFICATIONS

ITEM			SPECIFICATIONS
Battery	Capacity		12V－10AH
	Current leakage		0.1 mA max.
	Voltage (20°C/68°F)	Fully charged	13.0－13.2 V
		Needs charging	Below 12.3 V
	Charging current	Normal	1.2 A × 5－10 h
		Quick	5.0 A × 1.0 h
Alternator	Capacity		0.329 kW/5,000 rpm
	Charging coil resistance (20°C/68°F)		0.2－0.5 Ω

BATTERY

REMOVAL/INSTALLATION

Remove the rider seat (page 2-2).

Remove the PGM-FI fuse holder from the battery cover.

'00–'01: Open the battery cover by releasing the two lock tabs and two hinge tabs, and remove the cover from the battery case of the rear fender.

After '01: Open the battery cover by removing the two trim clips.

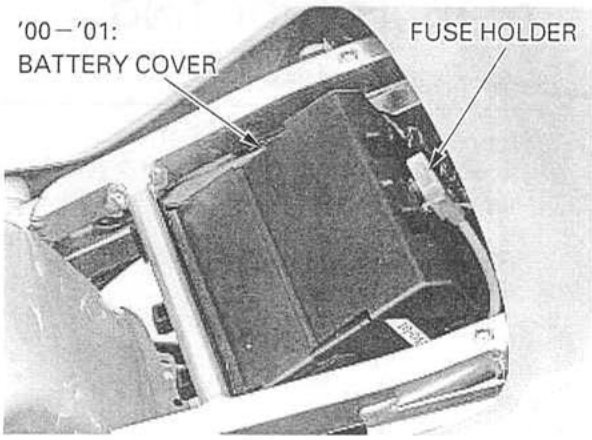

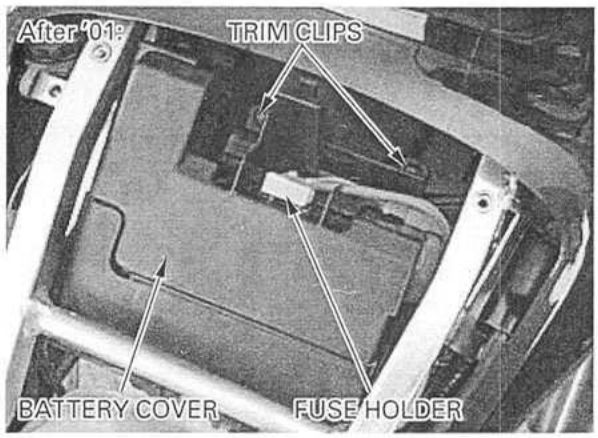

Raise the battery and with the ignition switch turned to "OFF", disconnect the negative (−) cable first, then disconnect the positive (+) cable.
Remove the battery from the battery case.

Install the battery in the reverse order of removal.

NOTE:

- Connect the positive (+) cable first, then connect the negative (−) cable.
- After connecting the battery cables, coat the terminals with dielectric grease.

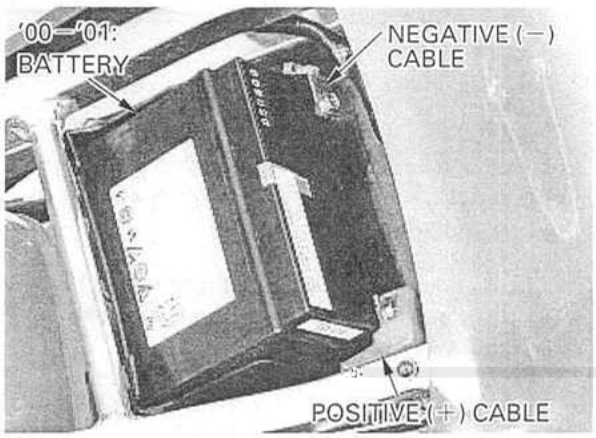

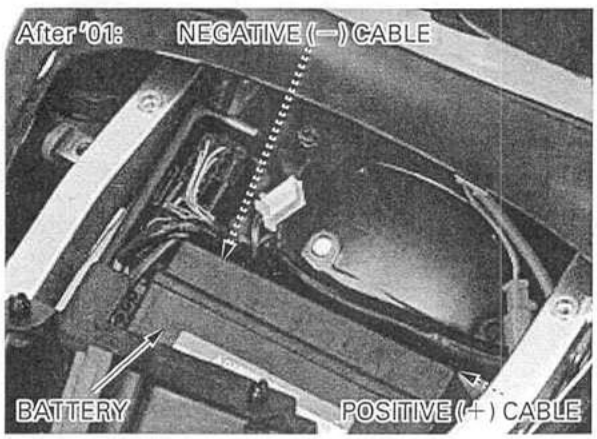

VOLTAGE INSPECTION

Open the battery cover.
Measure the battery voltage using a commercially available digital multimeter.

VOLTAGE (20°C/68°F): Fully charged: 13.0 – 13.2 V
Under charged: Below 12.3 V

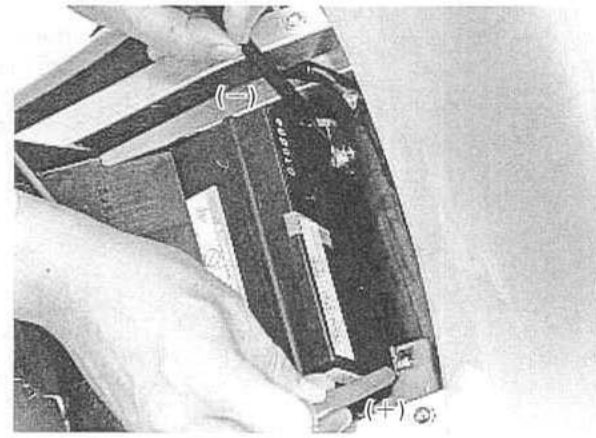

BATTERY TESTING

Remove the battery (page 16-4).

For accurate test results, be sure the tester's cables and clamps are in good working condition and that a secure connection can be made at the battery.

Securely connect the tester's positive (+) cable first, then connect the negative (–) cable.

TOOL:
Battery tester BM-210-AH or BM-210 (U.S.A only)

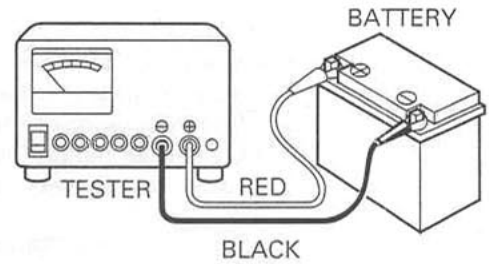

Set the temperature switch to "HIGH" or "LOW" depending on the ambient temperature.

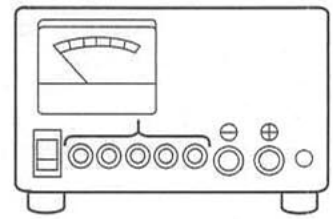

HIGH: 15°C (60°F) or higher
LOW: 15°C (60°F) or lower

For the first check, DO NOT charge the battery before testing; test it in an "as is" condition.

Push in the appropriate test button for 3 seconds and read the condition of the battery on the meter.

NOTICE

- *To avoid damaging the tester, only test batteries with an amperage rating of less than 30 Ah.*
- *Tester damage can result from overheating when:*
  - *The test button is pushed in for more than 3 seconds.*
  - *The tester is used without being allowed to cool for at least 1 minute when testing more than one battery.*
  - *More than ten consecutive tests are performed without allowing at least a 30-minute cool-down period.*

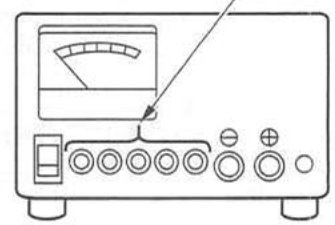

The result of a test on the meter scale is relative to the amp. hour rating of the battery. Any battery reading in the green zone is OK. Batteries should only be charged if they register in the YELLOW or RED zone.

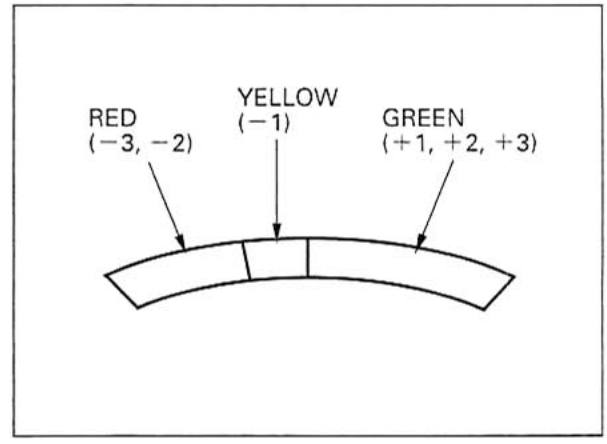

BATTERY CHARGING

Remove the battery (page 16-4).

NOTE:

- Make sure the area around the charger is well ventilated, clear of flammable materials, and free from heat, humidity, water and dust.
- Clean the battery terminals and position the battery as far away from the charger as the leads will permit.
- Do not place batteries below the charger-gases from the battery may corrode and damage the charger.
- Do not place batteries on top of the charger. Be sure the air vents are not blocked.

Turn the power ON/OFF at the charger, not at the battery terminals.

1. Turn the "POWER" switch to "OFF."
2. Set the "BATTERY AMP. HR. SELECTOR SWITCH" for the size of the battery being charged.

TOOL:

Christie battery charger MC1012/2 (U.S.A. only)

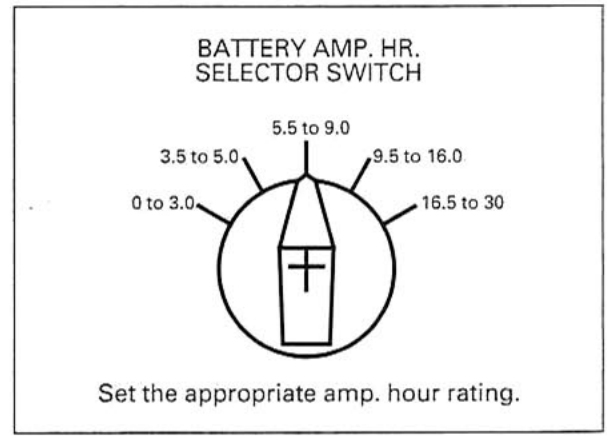

3. Set the "TIMER" to the position indicated by the Honda Battery Tester; RED-3, RED-2 or YELLOW 1. if you are charging a new battery, set the switch to the NEW BATT position.
4. Attach the clamps to the battery terminals: red to positive, black to negative.

Connecting the cables with the POWER switch turned to "ON" can produce a spark which could ignite or explode the battery.

Connect the battery cables only when the "POWER" switch is turned to "OFF."

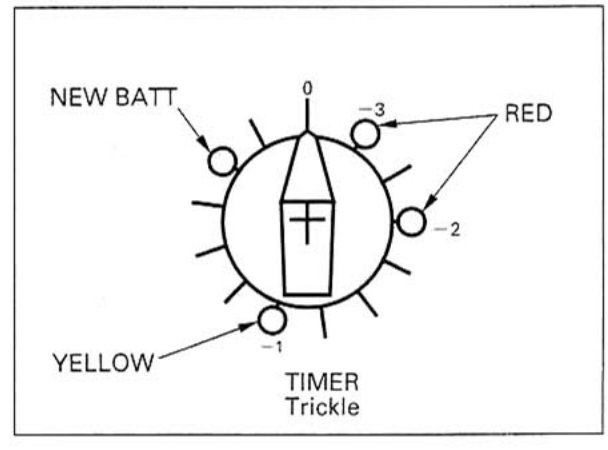

CHARGING VOLTAGE INSPECTION

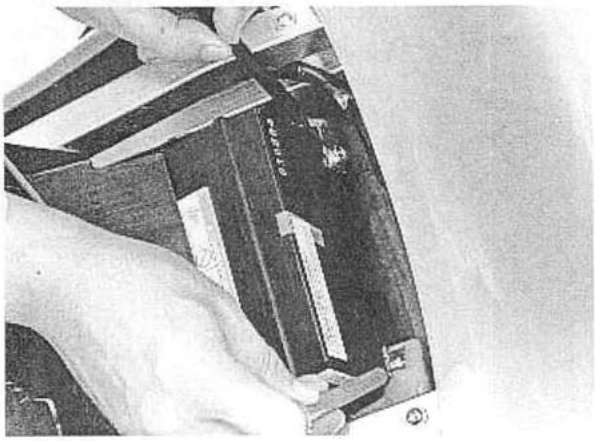

NOTE:

- Be sure the battery is in good condition before performing this test.

Start the engine and warm it up to the operating temperature; stop the engine.
Connect the multimeter between the positive and negative terminals of the battery.

NOTE:

- To prevent a short, make absolutely certain which are the positive and negative terminals or cable.
- Do not disconnect the battery or any cable in the charging system without first switching off the ignition switch. Failure to follow this precaution can damage the tester or electrical components.

With the headlight on high beam, restart the engine.
Measure the voltage on the multitester when the engine runs at 5,000 rpm.

STANDARD:
Measured battery voltage (page 16-5) < Measured charging voltage (see above) < 15.5 V

ALTERNATOR CHARGING COIL

INSPECTION

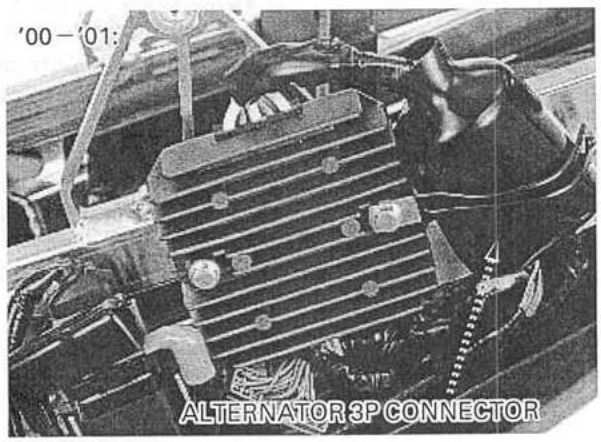

Remove the seat cowl (page 2-2).

Disconnect the alternator 3P (white) connector.

Measure the resistance between the wire terminals of the alternator side connector.

STANDARD: 0.2 – 0.5 Ω (20°C/68°F)

Check for continuity between each wire terminal of the alternator side connector and ground.
There should be no continuity.

Replace the alternator stator if resistance is out of specification, or if any wire has continuity to ground.

Refer to section 10 for alternator stator replacement.

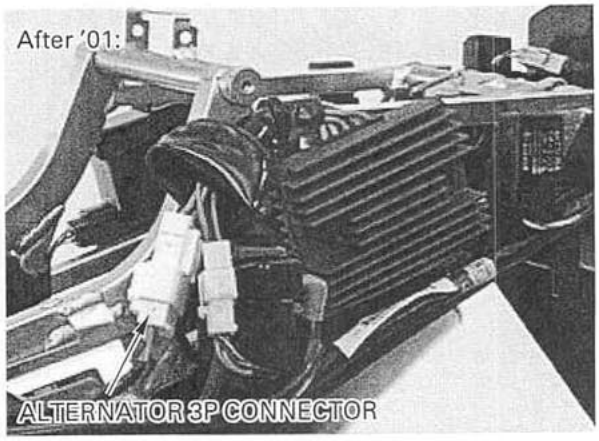

17. IGNITION SYSTEM

After '01:

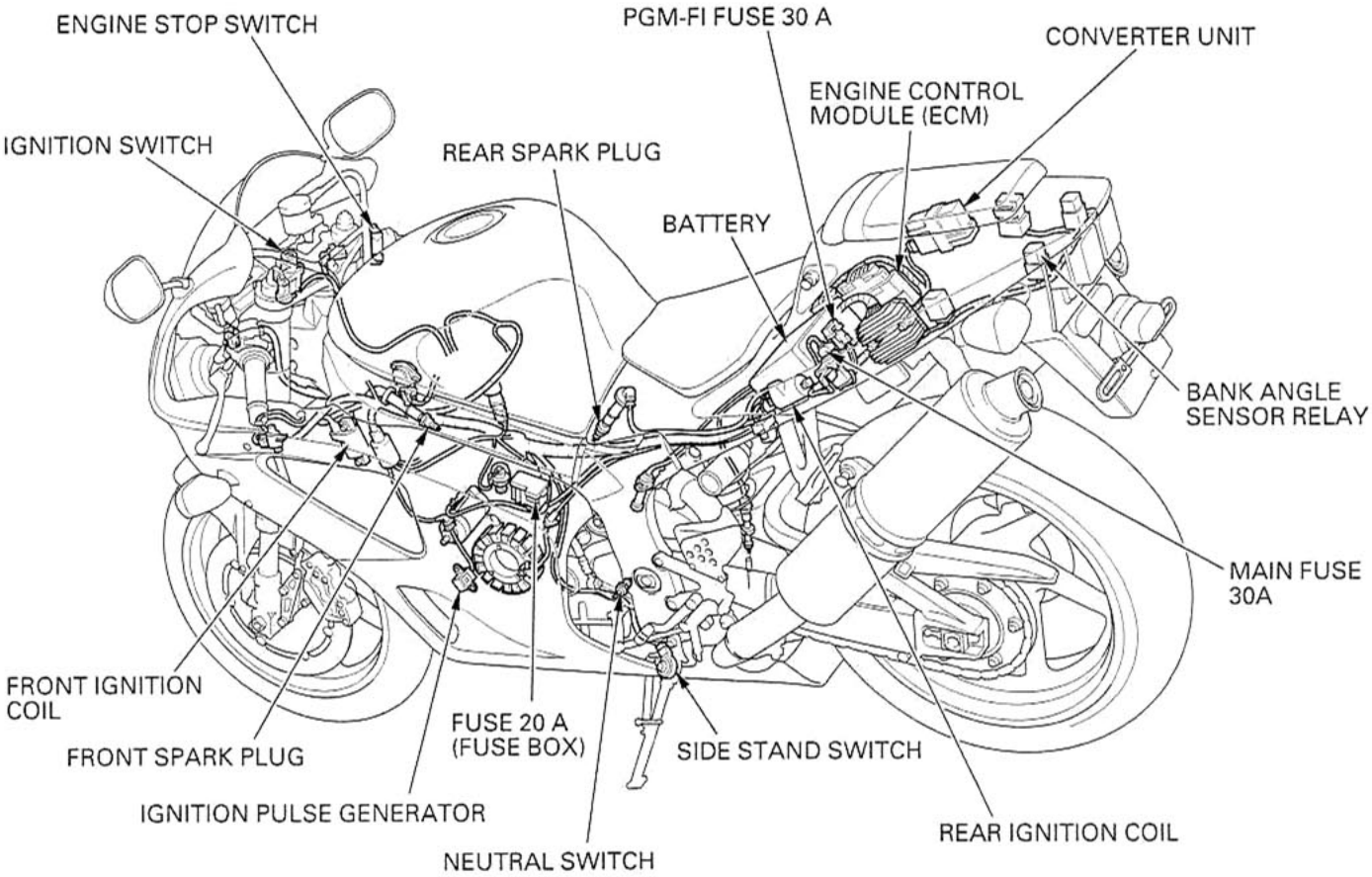

17

'00 – '01:

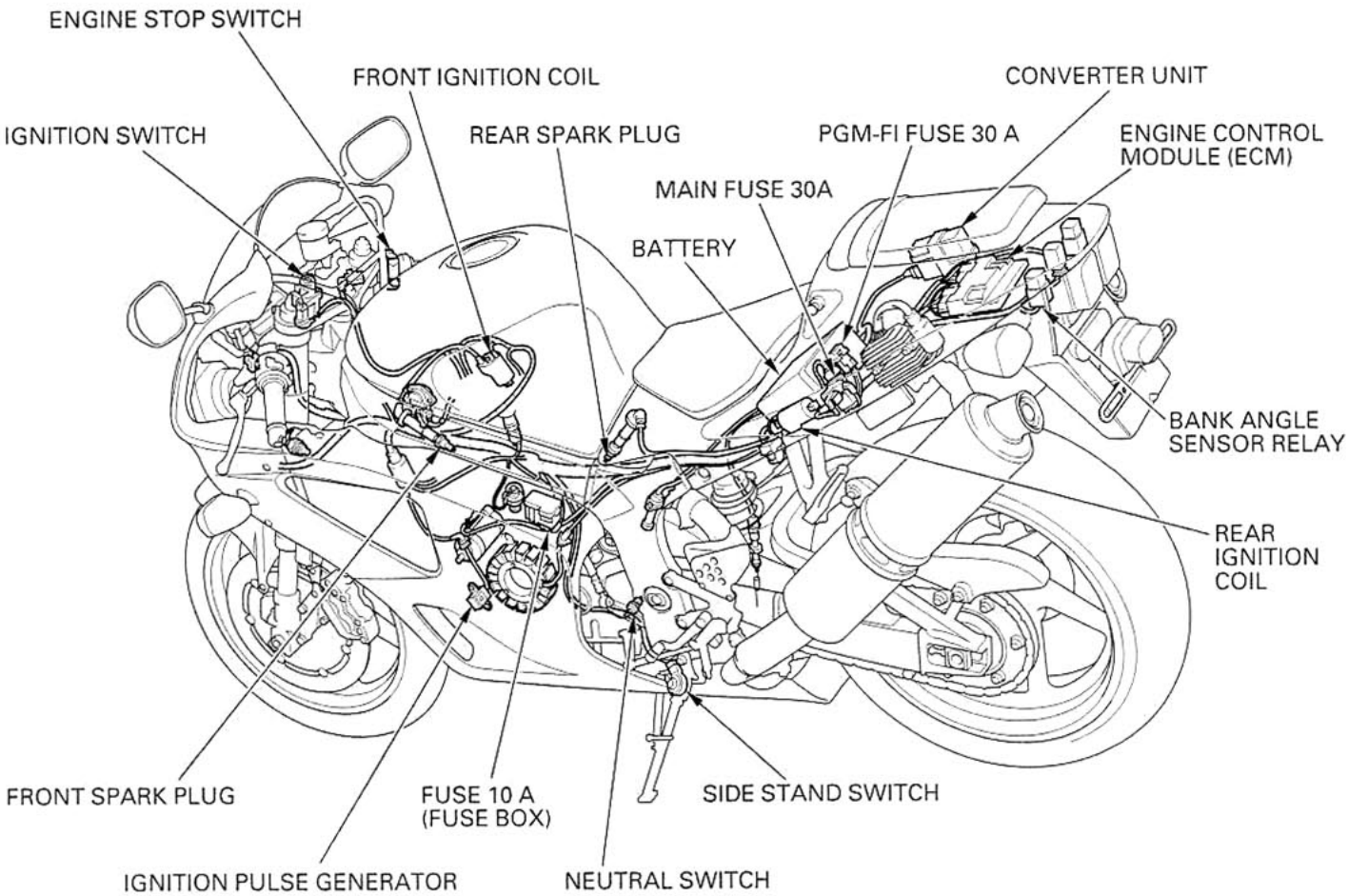
ENGINE STOP SWITCH
FRONT IGNITION COIL
CONVERTER UNIT
IGNITION SWITCH
REAR SPARK PLUG
PGM-FI FUSE 30 A
ENGINE CONTROL MODULE (ECM)
MAIN FUSE 30A
BATTERY
BANK ANGLE SENSOR RELAY
REAR IGNITION COIL
FRONT SPARK PLUG
FUSE 10 A (FUSE BOX)
SIDE STAND SWITCH
IGNITION PULSE GENERATOR
NEUTRAL SWITCH

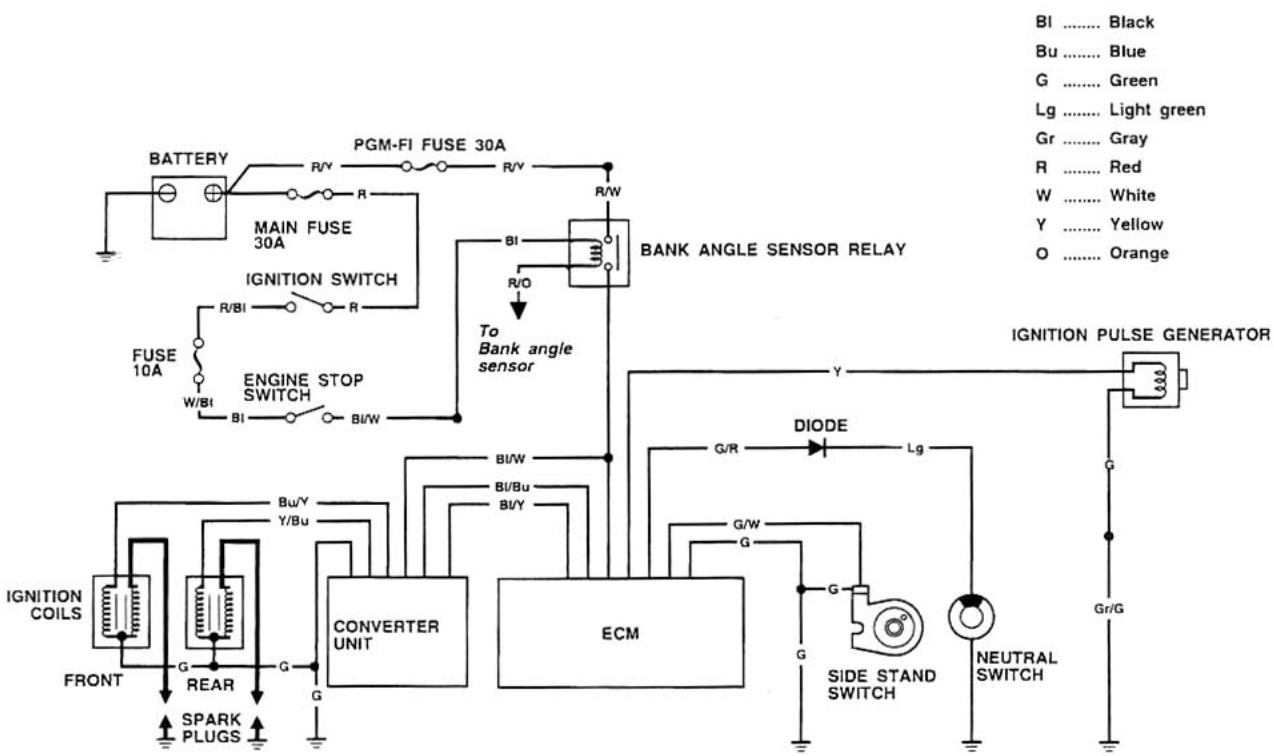
Bl ..... Black
Bu ..... Blue
G ..... Green
Lg ..... Light green
Gr ..... Gray
R ..... Red
W ..... White
Y ..... Yellow
O ..... Orange
BATTERY
PGM-FI FUSE 30A
R/Y
R/Y
R
R/W
MAIN FUSE 30A
Bl
BANK ANGLE SENSOR RELAY
IGNITION SWITCH
R/O
R/Bl
R
To Bank angle sensor
FUSE 10A
W/Bl
ENGINE STOP SWITCH
Bl
Bl/W
IGNITION PULSE GENERATOR
Y
DIODE
G/R
Lg
Bl/W
Bl/Bu
Bl/Y
Bu/Y
Y/Bu
G/W
G
G
IGNITION COILS
FRONT
REAR
G
G
G
CONVERTER UNIT
ECM
G
SIDE STAND SWITCH
NEUTRAL SWITCH
Gr/G
SPARK PLUGS

SERVICE INFORMATION

GENERAL

- Some electrical components may be damaged if terminals or connectors are connected or disconnected while the ignition switch is turned to "ON" and current is present.
- When servicing the ignition system, always follow the steps in the troubleshooting sequence on page 17-3.
- This motorcycle's Ignition Control Module (ICM) is built in the Engine Control Module (ECM).
- The transistorized ignition system uses an electrically controlled ignition timing system. No adjustments can be made to the ignition timing.
- The ECM varies ignition timing according to the engine speed.
- The ECM may be damaged if dropped. Also, if the connector is disconnected when current is flowing, the excessive voltage may damage the ECM. Always turn off the ignition switch before servicing.
- A faulty ignition system is often related to poor connections. Check those connections before proceeding.
- Make sure the battery is adequately charged. Using the starter motor with a weak battery results in a slower engine cranking speed as well as no spark at the spark plugs.
- This motorcycle's spark plugs are equipped with iridium type electrodes. Do not use spark plugs other than specified.
- For spark plug inspection, see section 3.
- See section 19 for following components:
  - Ignition switch
  - Engine stop switch
  - Neutral switch
  - Side stand switch
  - Clutch switch
  - Diode

SPECIFICATIONS

ITEM			SPECIFICATIONS
Spark plug	Standard	'00 – '01	FR9BI – 11 (NGK) , IK27C11 (DENSO)
		After '01	IFR9H11 (NGK) , VK27PRZ11 (DENSO)
	For cold climate (below 5°C/41°F)	'00 – '01	FR8BI – 11 (NGK) , IK24C11 (DENSO)
		After '01	IFR8H11 (NGK) , VK24PRZ11 (DENSO)
Spark plug gap			1.00 – 1.10 mm (0.039 – 0.043 in)
Ignition coil primary peak voltage			100 V minimum
Ignition pulse generator peak voltage			0.7 V minimum
Ignition timing ("F" mark)			15° BTDC at idle

TORQUE VALVES

Ignition pulse generator bolt	12 N·m (1.2 kgf·m , 9 lbf·ft)	Apply locking agent to the thread
Timing hole cup	9.8 N·m (1.0 kgf·m , 7 lbf·ft)	Apply grease to the threads

TOOLS

Peak voltage tester (U.S.A. only) or Peak voltage adaptor	07HGJ-0020100 (not available in U.S.A.) with commercially available digital multimeter (impedance 10 MΩ/DCV minimum) or IgnitionMate peak voltage tester, MTP-08-0193 (U.S.A. only)
Inspection adaptor	07VMJ-0020100 or equivalent commercially available in U.S.A.

TROUBLESHOOTING

- Inspect the following before diagnosing the system.
  - Faulty spark plug
  - Loose spark plug cap or spark plug wire connections
  - Water got into the spark plug cap (Leaking the ignition coil secondary voltage)
- If there is no spark at one cylinder, temporarily exchange the ignition coil with a known-good one and perform the spark test. If there is spark, the exchanged ignition coil is faulty.

No spark at spark plugs

UNUSUAL CONDITION		PROBABLE CAUSE (Check in numerical order)
Ignition coil primary voltage	Low peak voltage	1. Incorrect peak voltage adaptor connections. (System is normal if measured voltage is over the specifications with reverse connections.) 2. The multimeter impedance is too low; below 10 MΩ/DCV. 3. Cranking speed is too low. (Battery is undercharged) 4. The sampling timing of the tester and measured pulse were not synchronized. (System is normal if measured voltage is over the standard voltage at least once.) 5. Poorly connected connectors or an open circuit in the ignition system. 6. Faulty side stand switch or neutral switch. 7. An open circuit or loose connection in No. 7 related circuit wires. • Side stand switch line: green/white wire • Neutral switch line: light green and green/red wires 8. Faulty ignition coil. 9. Faulty engine control module (ECM) and/or converter unit (in case when above No. 1 thru. 8 are normal).
	No peak voltage	1. Incorrect peak voltage adaptor connections. (System is normal if measured voltage is over the specifications with reverse connections.) 2. Battery is undercharged. (Voltage drops largely when the engine is started.) 3. Faulty ignition switch or engine stop switch. 4. Loose or poorly connected ECM or converter unit connectors. 5. No voltage at the black/white (power source) wire of the ECM or converter unit. 6. Open circuit or poor connection in green (ground) wire of the ECM or converter unit. 7. Faulty side stand switch or neutral switch. 8. An open circuit or loose connection in No. 7 related circuit wires. • Side stand switch line: green/white wire • Neutral switch line: light green and green/red wires 9. Faulty peak voltage adaptor. 10. Faulty ignition pulse generator. (Measure peak voltage.) 11. Faulty ECM and/or converter unit (in case when above No. 1 thru. 10 are normal).
	Peak voltage are normal, but does not spark.	1. Faulty spark plug or leaking ignition coil secondary current ampere. 2. Faulty ignition coil.
Ignition pulse generator	Low peak voltage	1. The multimeter impedance is too low; below 10 MΩ/DCV. 2. Cranking speed is too slow. (Battery is undercharged.) 3. The sampling timing of the tester and measured pulse were not synchronized. (System is normal if measured voltage is over the standard voltage at least once.) 4. Faulty ignition pulse generator (in case when above No. 1 thru. 3 are normal).
	No peak voltage	1. Faulty peak voltage adaptor. 2. Faulty ignition pulse generator.

IGNITION SYSTEM INSPECTION

NOTE:
- If no spark is at the plugs, check all connections for loose or poor contact before measuring each peak voltage.
- Use a commercially available digital multimeter (impedance 10 MΩ/DCV minimum).
- The display value differs depending upon the internal impedance of the multimeter.

Connect the peak voltage adaptor to the digital multimeter, or use the peak voltage tester.

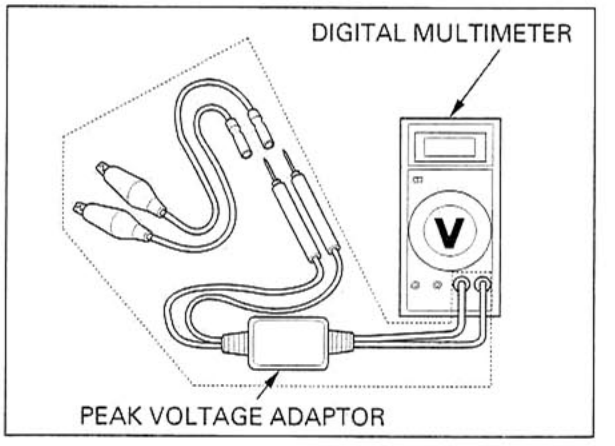

TOOLS:
Peak voltage tester (U.S.A. only) or
Peak voltage adaptor 07HGJ-0020100
(not available in U.S.A)
with commercially available digital multimeter (impedance 10 MΩ/DCV minimum) or Ignition-Mate peak voltage tester, MTP-08-0193 (U.S.A. only)

Remove the seat cowl (page 2-2).
Disconnect the fuel pump 3P (black) connector.

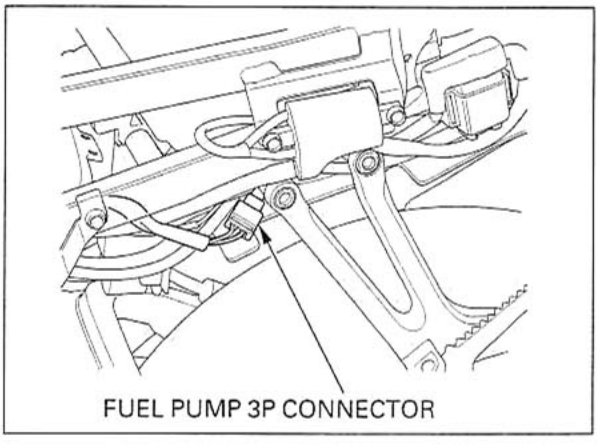

IGNITION PRIMARY PEAK VOLTAGE

NOTE:
- Check all system connections before this inspection. Poor connected connectors can cause incorrect readings.
- Check the cylinder compression at each cylinder and check that the spark plug is installed correctly in each cylinder.

Disconnect the spark plug caps from the spark plugs (page 3-7).
Connect known-good spark plugs to the spark plug caps and ground the spark plugs to the cylinder heads as done in a spark test.

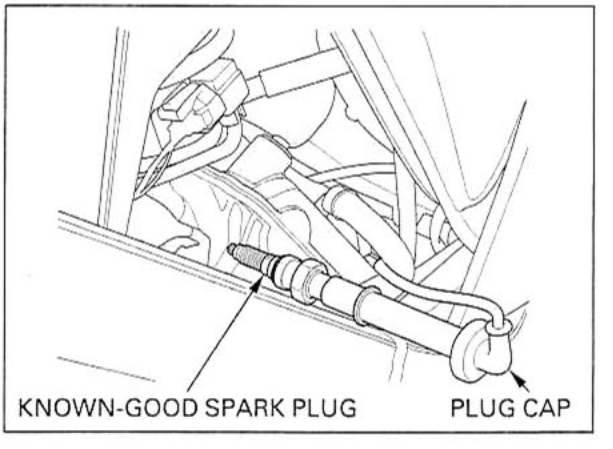

Front ('00—'01):
Remove the right radiator (page 6-7).

Remove the ignition coil bracket bolts.
Disconnect the ignition coil 2P (white) connector.

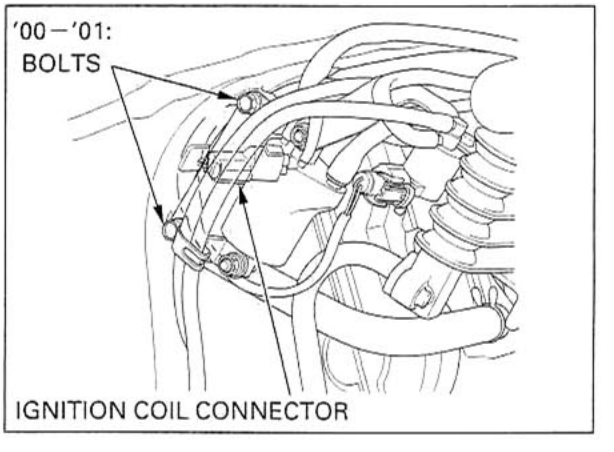

Front (After '01):
Remove the following :
— lower inner fairing (page 2-3)
— left lower fairing (page 2-4)

Remove the oil cooler mounting bolts, washers and oil cooler with the oil hose/pipe joint bolts installed.
Remove the radiator reserve tank mounting bolt and radiator reserve tank with the siphone hose connected.
Remove the front ignition coil mounting bolts, collars and front ignition coil.
Disconnect the ignition coil 2P (White) connector.

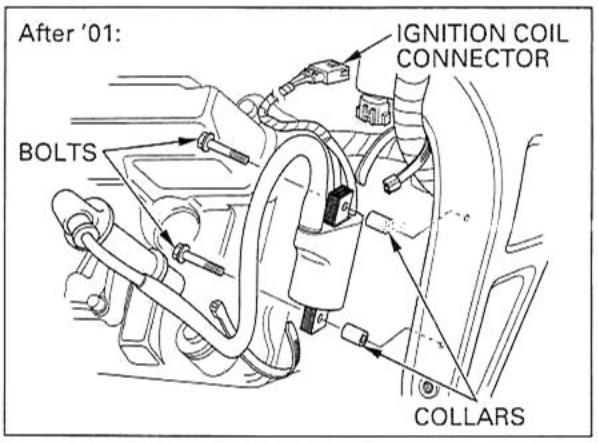

Rear:
Remove the seat cowl (page 2-2).
Disconnect the ignition coil 2P (white) connector.

Connect the inspection adaptor to the ignition coil connectors.

TOOL:
Inspection adaptor 07VMJ-0020100 or equivalent commercially available in U.S.A.

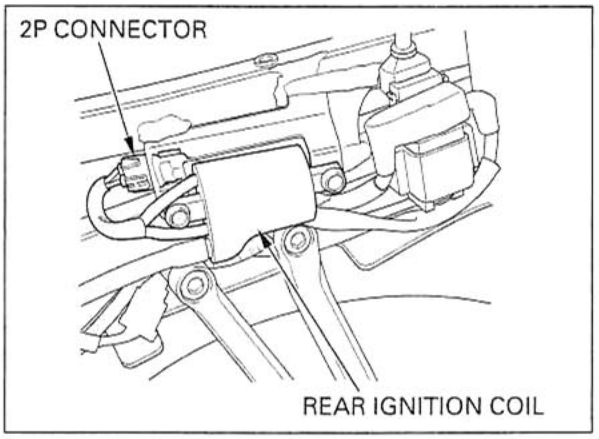

Connect the peak voltage tester or adaptor probes to the inspection adaptor.

TOOLS:
Peak voltage tester (U.S.A. only) or
Peak voltage adaptor 07HGJ-0020100 (not available in U.S.A.)
with commercially available digital multimeter (impedance 10 MΩ/DCV minimum) or Ignition-Mate peak voltage tester, MTP-08-0193 (U.S.A. only)

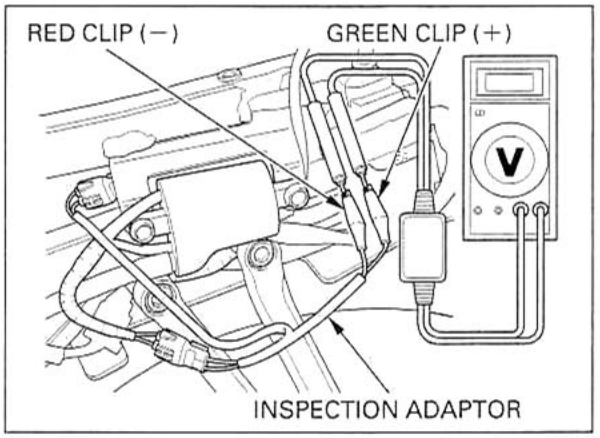

CONNECTIONS: Red clip (−) — Green clip (+)

Turn the ignition switch to "ON" and engine stop switch to "○".

Shift the transmission into neutral.
Crank the engine with the starter motor and measure the ignition coil primary peak voltage.

Avoid touching the spark plugs and tester probes to prevent electric shock.

PEAK VOLTAGE : 100 V minimum

NOTE:
- Although measured values are different for each ignition coil, they are normal as long as voltage is higher than the specified value.

If the peak voltage is lower than the specified value, follow the checks described in the troubleshooting chart (page 17-3).

Install the removed parts in the reverse order of removal.

Connect the peak voltage tester or adaptor probes to the wire harness side connector terminal and body ground.

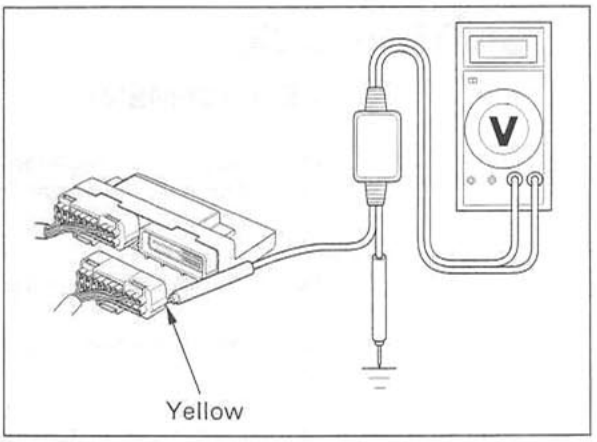

TOOLS:
Peak voltage tester (U.S.A. only) or
Peak voltage adaptor 07HGJ-0020100
(not available in U.S.A.)
with commercially available digital multimeter (impedance 10 MΩ/DCV minimum) or Ignition-Mate peak voltage tester, MTP-08-0193 (U.S.A. only)

CONNECTION: Yellow terminal – body ground

Turn the ignition switch to "ON" and engine stop switch to "○".
Shift the transmission into neutral.
Crank the engine with the starter motor and measure the ignition pulse generator peak voltage.

PEAK VOLTAGE : 0.7 V minimum

If the peak voltage measured at ECM connector is abnormal, measure the peak voltage at the pulse generator connector.

Remove the lower inner fairing and left lower fairing (page 2-3, 2-4).

Disconnect the ignition pulse generator 2P (red) connector and connect the peak voltage tester or adaptor probes to the connector terminals of the ignition pulse generator side.
In the same manner as at the ECM connector, measure the peak voltage and compare it to the voltage measured at the ECM connector.

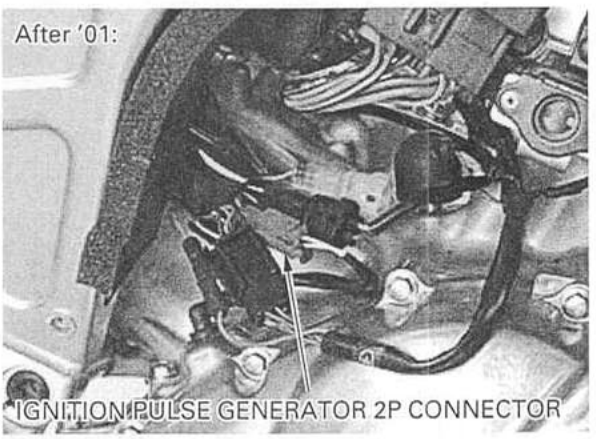

- If the peak voltage measured at the ECM is abnormal and the one measured at the ignition pulse generator is normal, the wire harness has an open or short circuit, or loose connection.
- If the peak voltage is lower than standard value, follow the checks described in the troubleshooting chart (page 17-3).

Install the removed parts in the reverse order of removal.

IGNITION TIMING

Start the engine and warm it up to operating temperature.
Stop the engine and remove the left lower fairing (page 2-4) and timing hole cap.

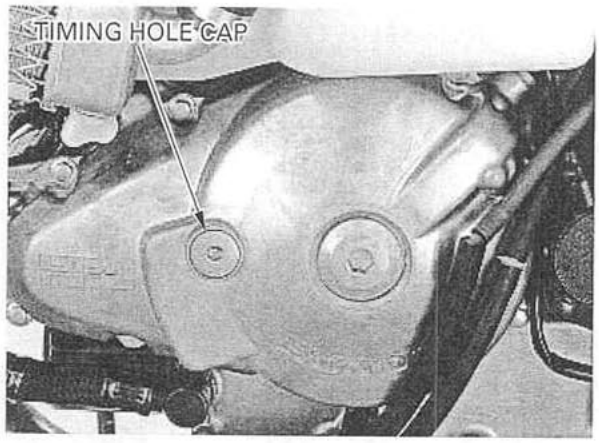

Front: Remove the lower inner fairing (page 2-3).
Rear: Raise the front of the fuel tank and support it (page 3-4).

Read the manufacturer's instructions for timing light operation.

Connect the timing light to the spark plug wire.

Start the engine, let it idle and check the ignition timing.

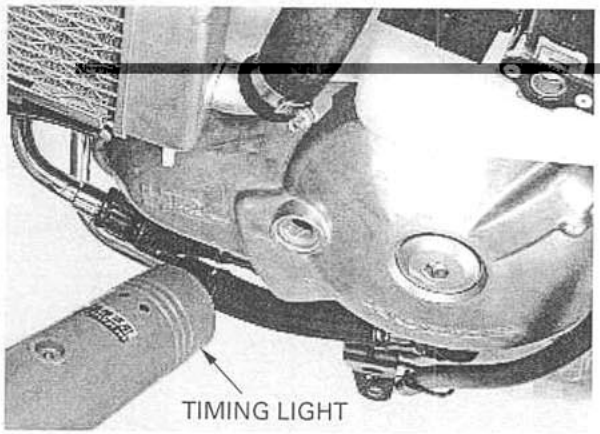

The ignition timing is correct if the "F" mark on the flywheel aligns with the index mark on the left crankcase cover at idle.

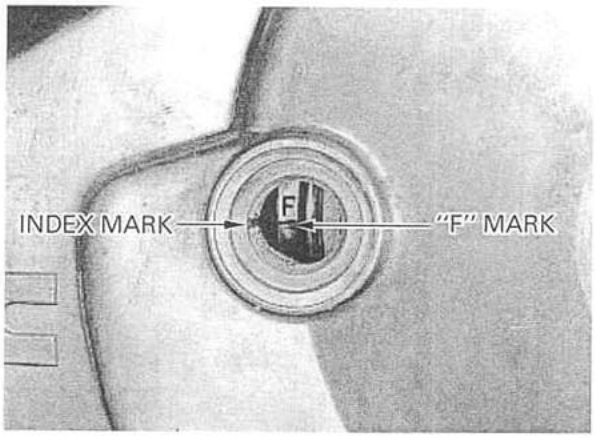

Coat a new O-ring with grease and install it onto the timing hole cap.
Apply grease to the timing hole cap threads.
Install and tighten the timing hole cap.

TORQUE: 10 N·m (1.0 kgf·m , 7 lbf·ft)

Install the removed parts in the reverse order of removal.

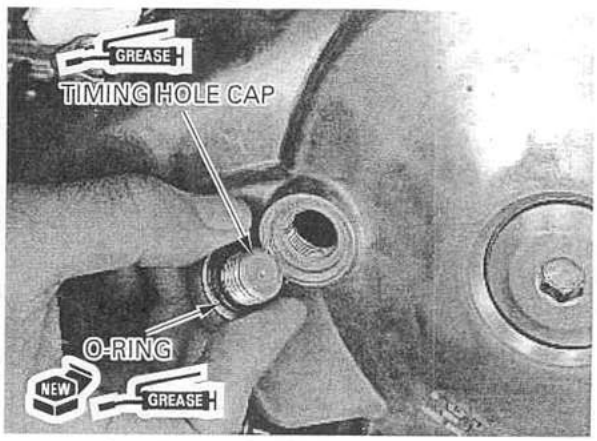

18. ELECTRIC STARTER

SERVICE INFORMATION

GENERAL

- Always turn the ignition switch to "OFF" before servicing the starter motor. The motor could suddenly start, causing serious injury.
- The starter motor can be serviced with the engine in the frame.
- When checking the starter system, always follow the steps in the troubleshooting flow chart (page 18-2).
- A weak battery may be unable to turn the starter motor quickly enough, or supply adequate ignition current.
- If the current is kept flowing through the starter motor to turn it while the engine is not cranking over, the starter motor may be damaged.
- See section 10 for starter clutch servicing.
- See section 19 for following components:
  - Ignition switch
  - Engine stop switch
  - Starter switch
  - Neutral switch
  - Side stand switch
  - Clutch switch

SPECIFICATION

Unit: mm (in)

ITEM	STANDARD	SERVICE LIMIT
Starter motor brush length	12.0 – 13.0 (0.47 – 0.51)	6.5 (0.26)

TORQUE VALUE

Starter motor cable terminal nut 10 N·m (1.0 kgf·m , 7 lbf·ft)

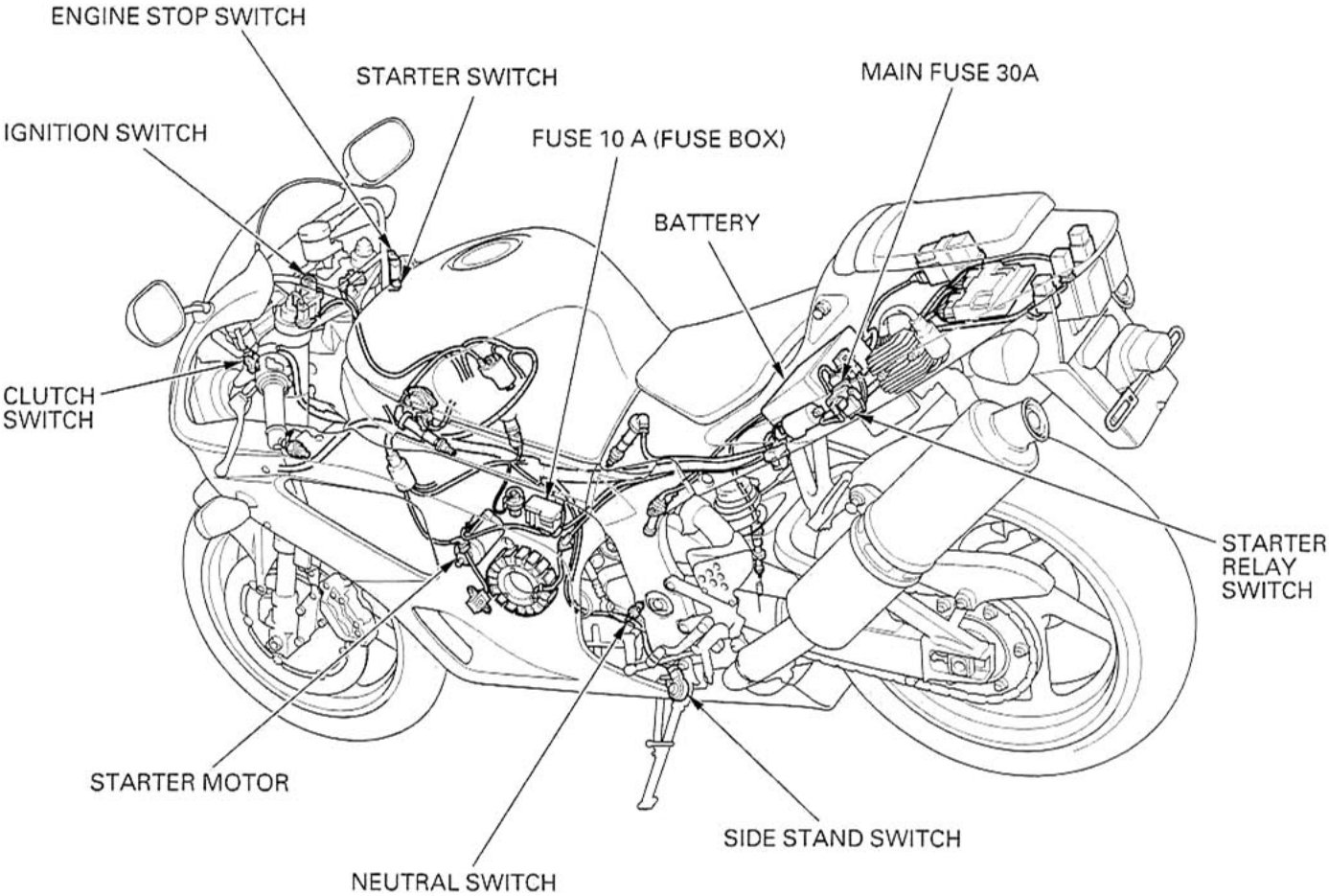

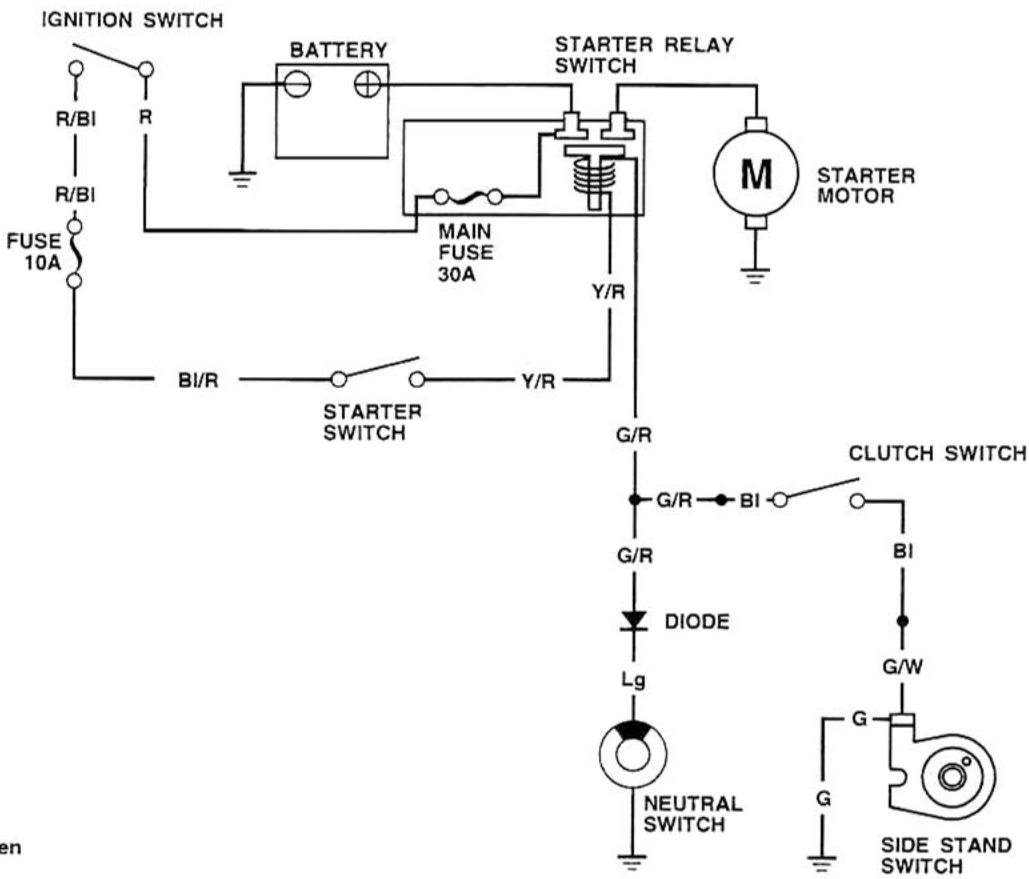

BI	.....	Black
Y	.....	Yellow
Br	.....	Brown
G	.....	Green
R	.....	Red
W	.....	White
Lg	.....	Light green

TROUBLESHOOTING

Starter motor will not turn

- Check for a blown main fuse (30 A) or sub-fuse (10A) (headlight)
- Check that the battery is fully charged and in good condition.

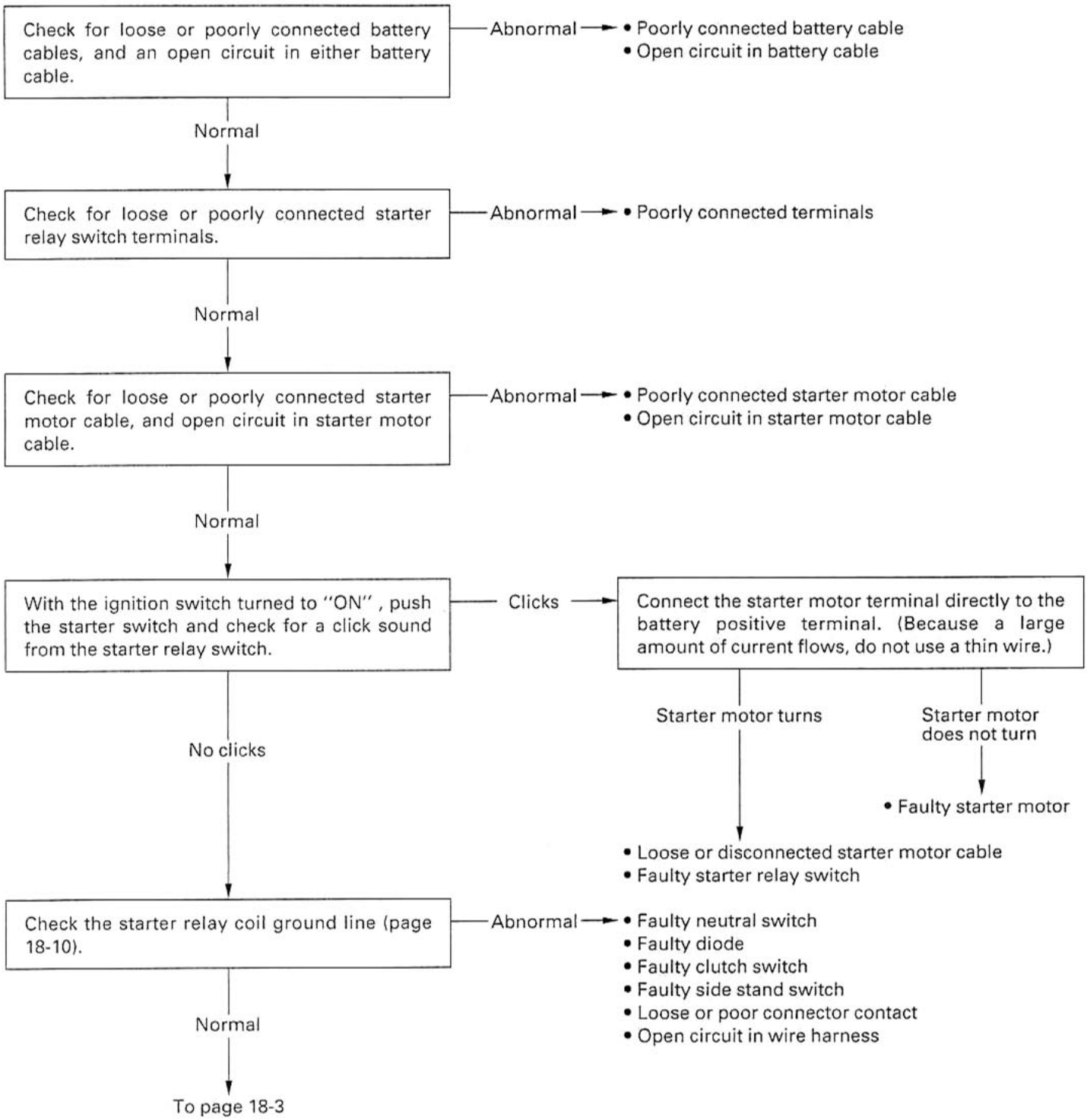

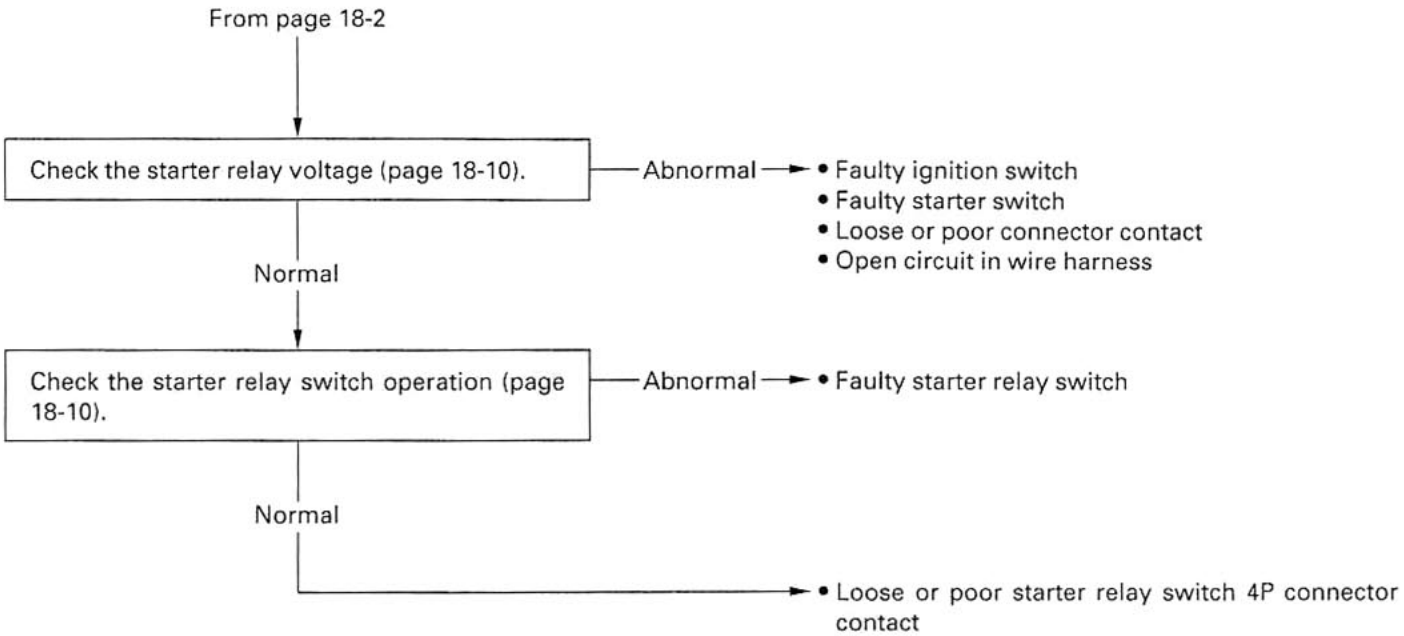

Starter motor turns slowly
- Weak battery
- Poorly connected battery cable
- Poorly connected starter motor cable
- Faulty starter motor

Starter motor turns, but engine does not turn
- Faulty starter clutch (section 10)

Starter relay switch clicks, but engine does not turn over
- Crankshaft does not turn due to engine problem
- Faulty starter clutch (section 10)
- Faulty starter torque limiter or idle gear (section 10)

STARTER MOTOR

REMOVAL

Turn the ignition switch to "OFF".

Remove the right lower fairing (page 2-4).

Remove the rubber cap, terminal nut and starter motor cable.
Remove the two mounting bolts, vacuum tank stay and the starter motor from the crankcase.

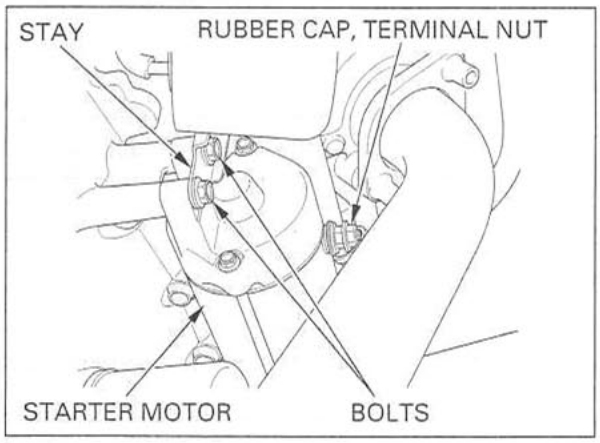

Remove the O-ring from the starter motor.

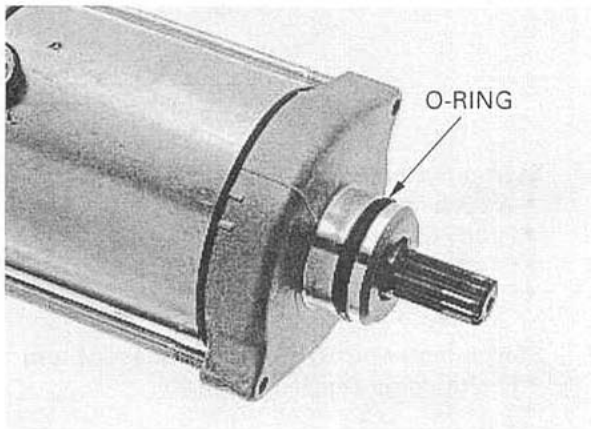

DISASSEMBLY

Remove the starter motor case bolts.

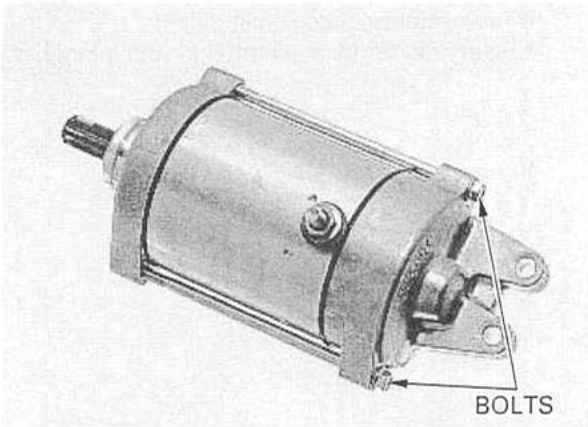

Record the location and number of shims.

Remove the rear cover, seal ring and shims.

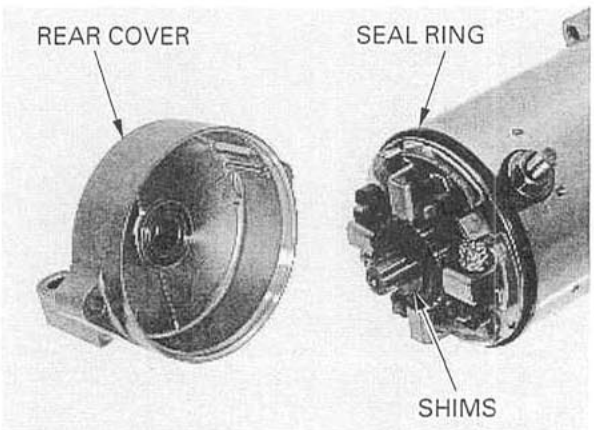

Remove the following:
- front cover
- seal ring
- lock washer
- insulated washer
- shims
- armature

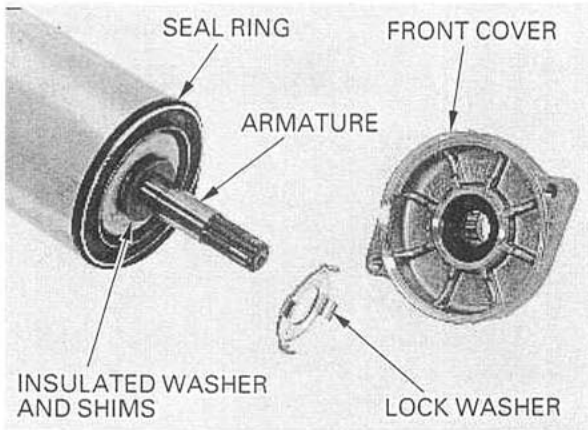

INSPECTION

Check the bushing in the rear cover for wear or damage.

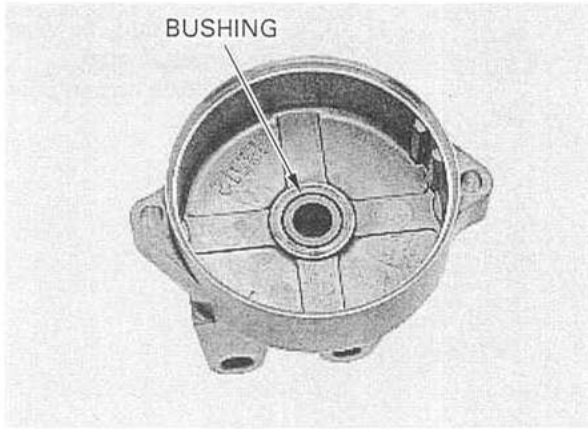

Check the oil seal and needle bearing in the front cover for deterioration, wear or damage.

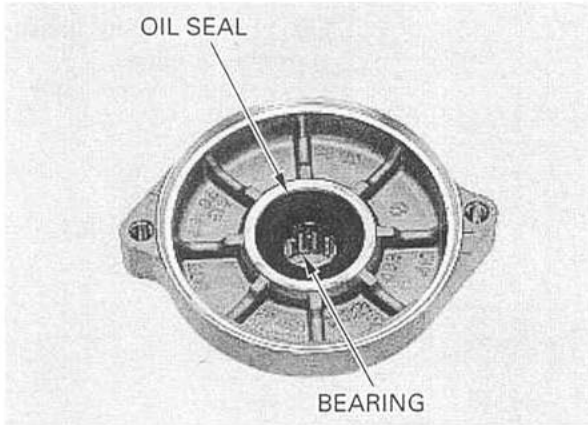

Check the commutator bars of the armature for discoloration.

NOTE:
- Do not use emery or sand paper on the commutator.

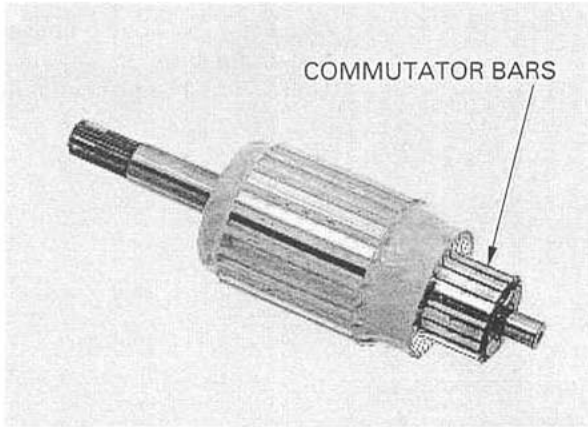

Check for continuity between pairs of commutator bars.
There should be continuity.

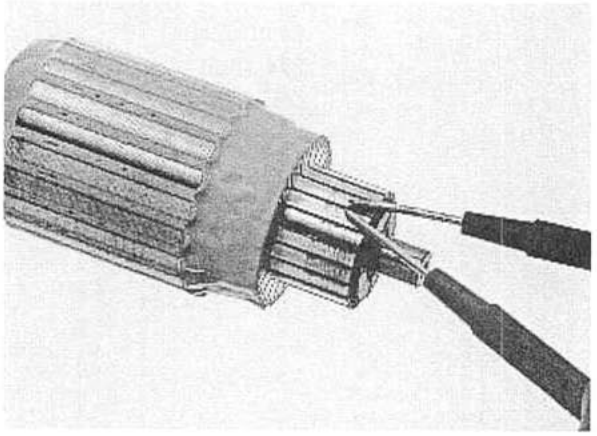

Check for continuity between each commutator bar and the armature shaft.
There should be no continuity.

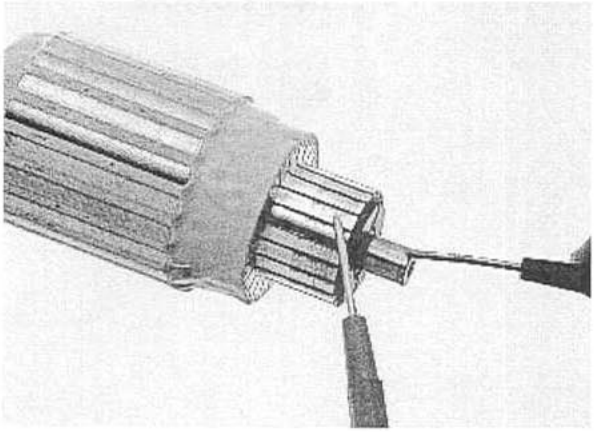

Check for continuity between the insulated brush and cable terminal.
There should be continuity.

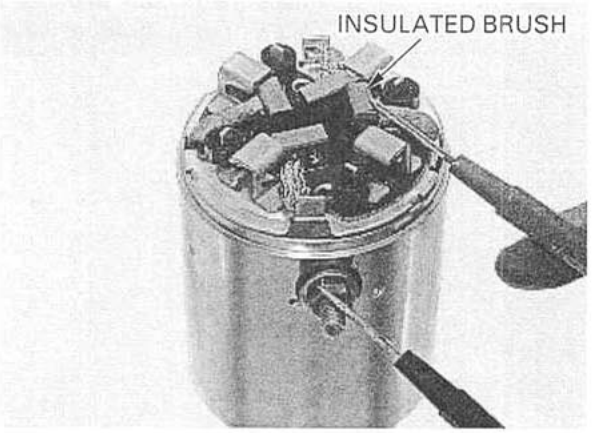

Check for continuity between the cable terminal and motor case.
There should be no continuity.

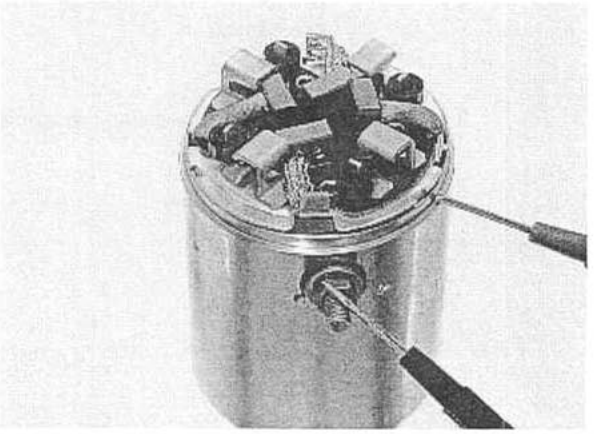

Measure the brush length.

SERVICE LIMIT: 6.5 mm (0.26 in)

Remove the following if necessary:
– brush holder

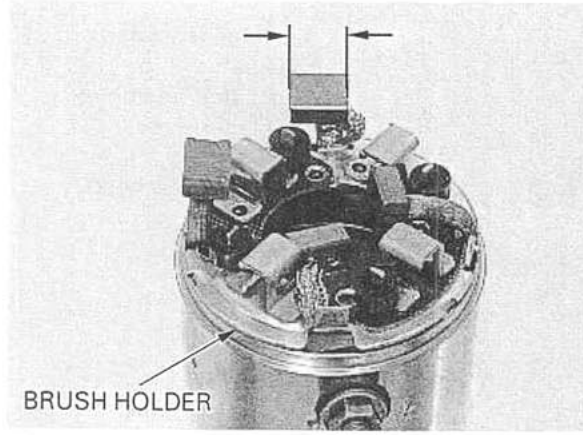

– nut
– washer
– insulator washers
– O-ring
– cable terminal
– insulated brush
– insulator

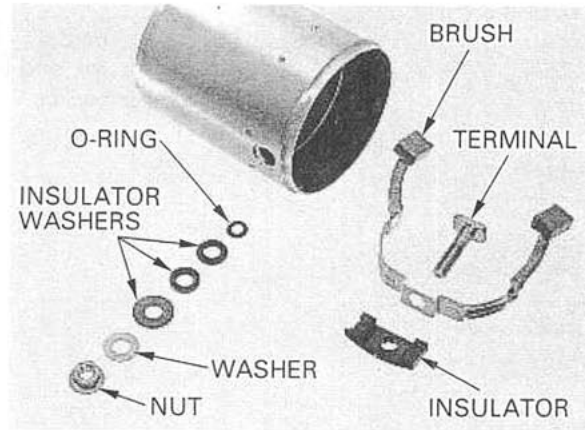

ASSEMBLY

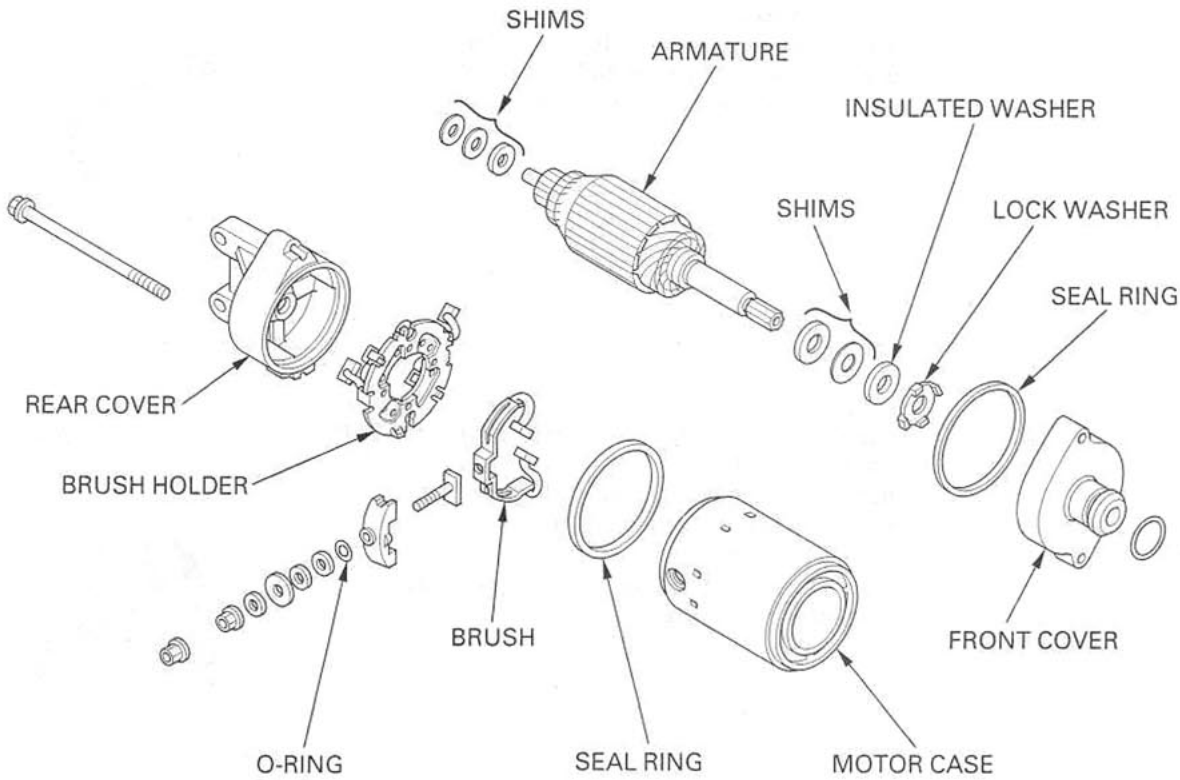

Install the following:
- insulator
- insulated brush
- cable terminal
- new O-ring
- insulator washers
- washer
- nut

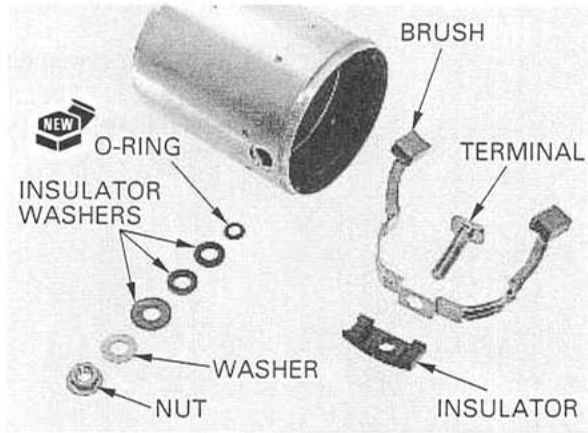

Install the brush holder, aligning the holder tab with the case groove, and the holder grooves with the insulated brush wires.

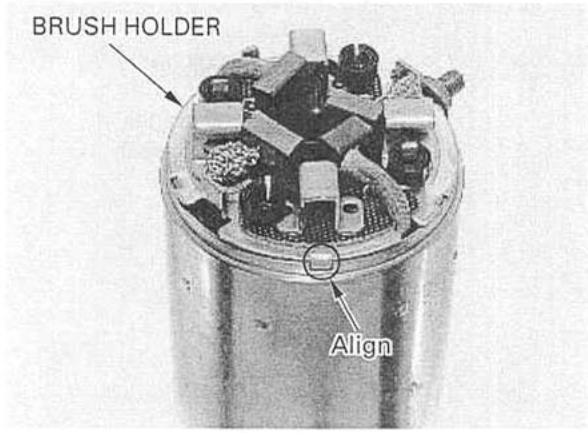

The coil may be damaged if the magnet pulls the armature against the case.

Push and hold the brushes inside the brush holder, and install the armature through the motor case and brush holder.
When installing the armature into the motor case, hold the armature tightly to keep the magnet of the case from pulling the armature against it.

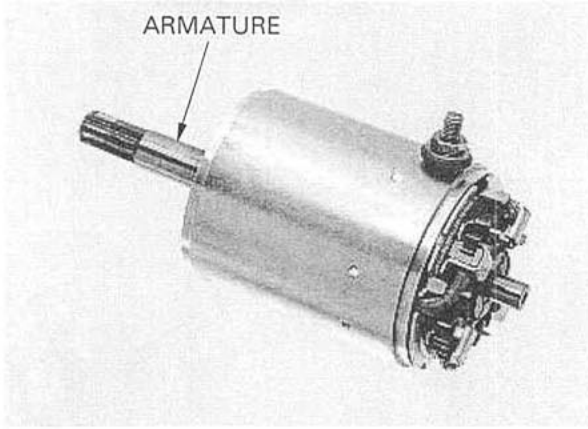

Install the shims and insulated washer onto the armature shaft.
Install a new seal ring onto the motor case.
Apply grease to the oil seal lip and needle bearing in the front cover.
Install the lock washer onto the front cover.
Install the front cover.

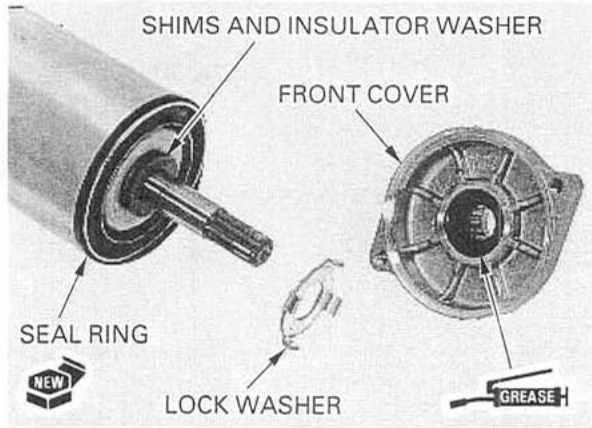

Install the same number of shims in the same locations as noted during disassembly.
Install a new seal ring onto the motor case.
Apply a thin coat of grease to the armature shaft end.
Install the rear cover, aligning its groove with the brush holder tab.

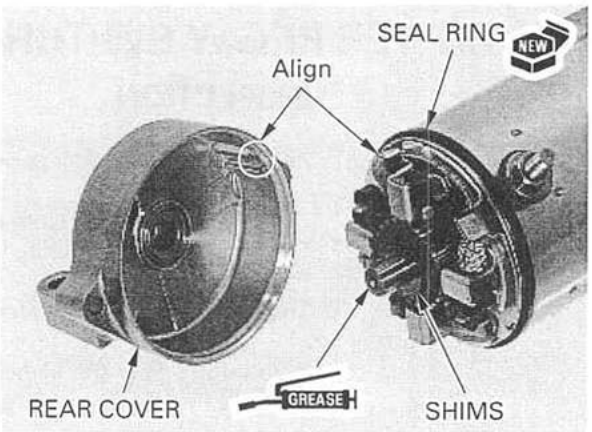

Install and tighten the motor case bolts.

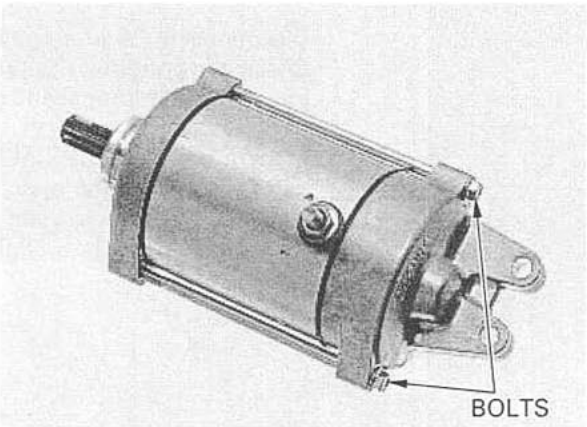

INSTALLATION

Coat a new O-ring with oil and install it into the starter motor groove.

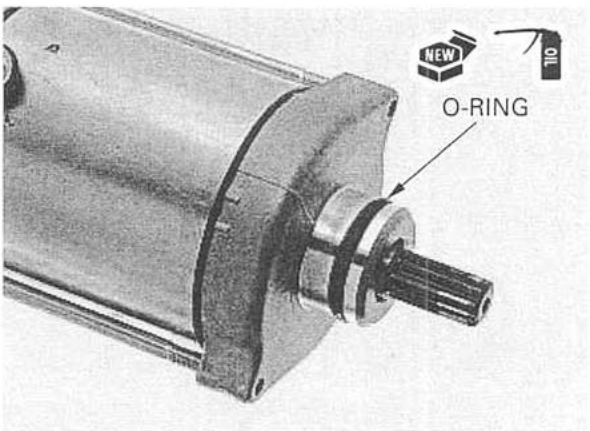

Install the starter motor into the crankcase.
Install the vacuum tank stay and motor mounting bolts, and tighten the bolts securely.
Connect the starter motor cable.
Install and tighten the terminal nut.

TORQUE: 10 N·m (1.0 kgf·m , 7 lbf·ft)

Install the rubber cap securely.

Install the right lower fairing (page 2-4).

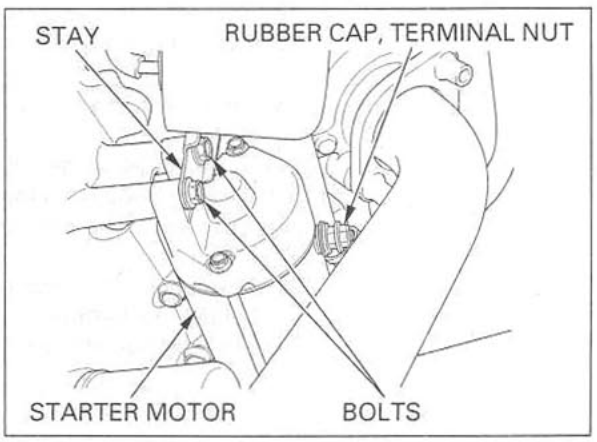

STARTER RELAY SWITCH

INSPECTION

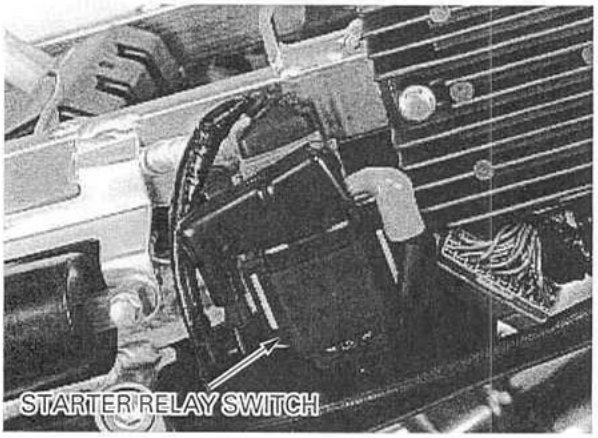

Remove the seat cowl (page 2-2).

Shift the transmission into neutral.
Turn the ignition switch to "ON".
Push the starter switch.
The coil is normal if the starter relay switch clicks.

If you don't hear the switch click, inspect the relay switch using the procedure below.

GROUND LINE

Disconnect the starter relay switch 4P connector.
Check for continuity between the green/red wire (ground line) terminal and ground.

If there is continuity when the transmission is in neutral or when the clutch is disengaged and the side stand is retracted, the ground circuit is normal. (In neutral, there is a slight resistance due to the diode.)

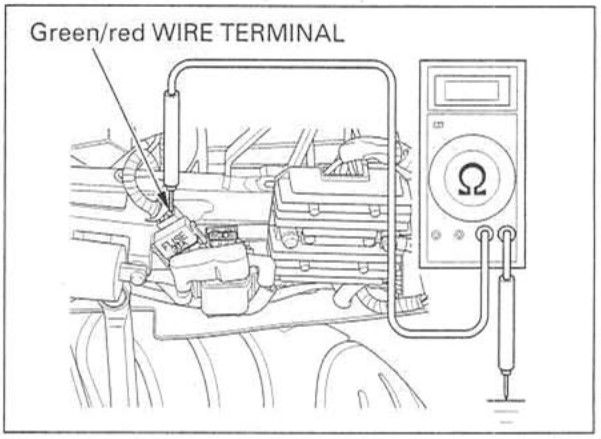

STARTER RELAY VOLTAGE

Connect the starter relay switch 4P connector.
Shift the transmission into neutral.
Measure the voltage between the yellow/red wire terminal (+) and ground (−).

If the battery voltage appears only when the starter switch is pushed with the ignition switch ON, it is normal.

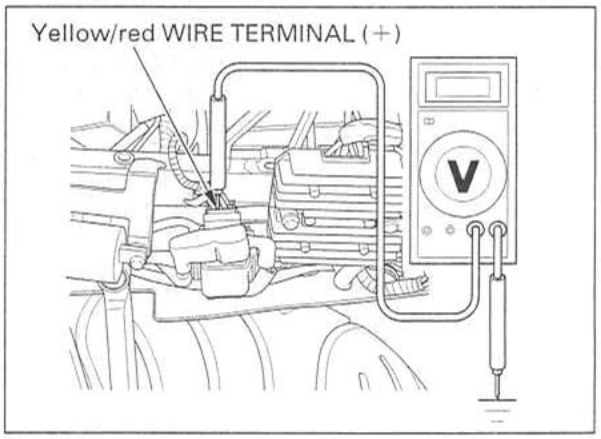

OPERATION CHECK

Disconnect the starter relay switch 4P connector and cables.
Connect a fully charged 12 V battery positive wire to the relay switch yellow/red wire terminal and negative wire to the green/red wire terminal.

There should be continuity between the large terminals while the battery is connected, and no continuity when the battery is disconnected.

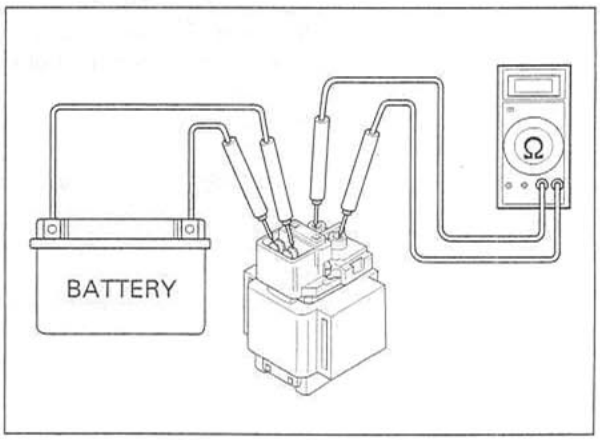

DIODE

INSPECTION

Remove the left lower fairing (page 2-4).

Open the fuse box cover and remove the diode.

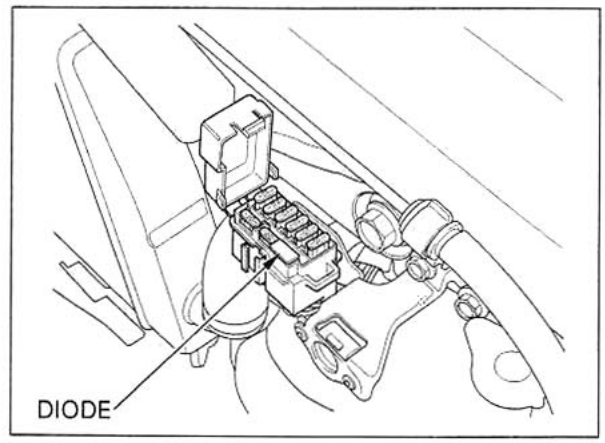

Check for continuity between the diode terminals. When there is continuity, a small resistance value will register.

If there is continuity in one direction, the diode is normal.

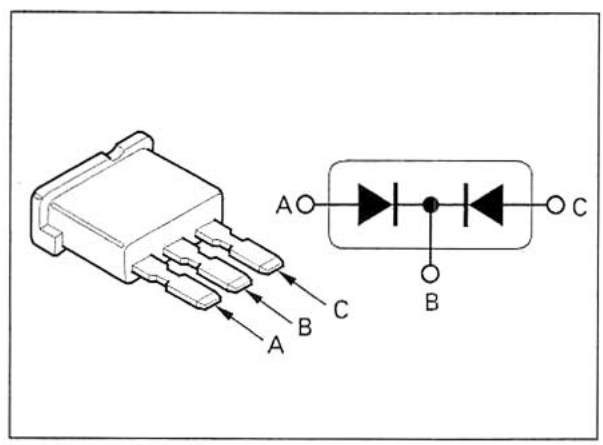

19. LIGHTS/METERS/SWITCHES

SERVICE INFORMATION

GENERAL

NOTICE

A halogen headlight bulb becomes very hot while the headlight is on, and remains hot for a while after it is turned off. Be sure to let it cool down before servicing.

- Use an electric heating element to heat the water/coolant mixture for the thermosensor inspection. Keep all flammable materials away from the electric heating element. Wear protective clothing, insulated gloves and eye protection.
- Note the following when replacing the halogen headlight bulb.
  - Wear clean gloves while replacing the bulb. Do not put fingerprints on the headlight bulb, as they may create hot spots on the bulb and cause it to fail.
  - If you touch the bulb with your bare hands, clean it with a cloth moistened with alcohol to prevent its early failure.
  - Be sure to install the dust cover after replacing the bulb.
- Check the battery condition before performing any inspection that requires proper battery voltage.
- A continuity test can be made with the switches installed on the motorcycle.
- The following color codes used are indicated throughout this section.

Bu: Blue	G: Green	Lg: Light Green	R: Red
Bl: Black	Gr: Gray	O: Orange	W: White
Br: Brown	Lb: Light Blue	P: Pink	Y: Yellow

'00 – '01:

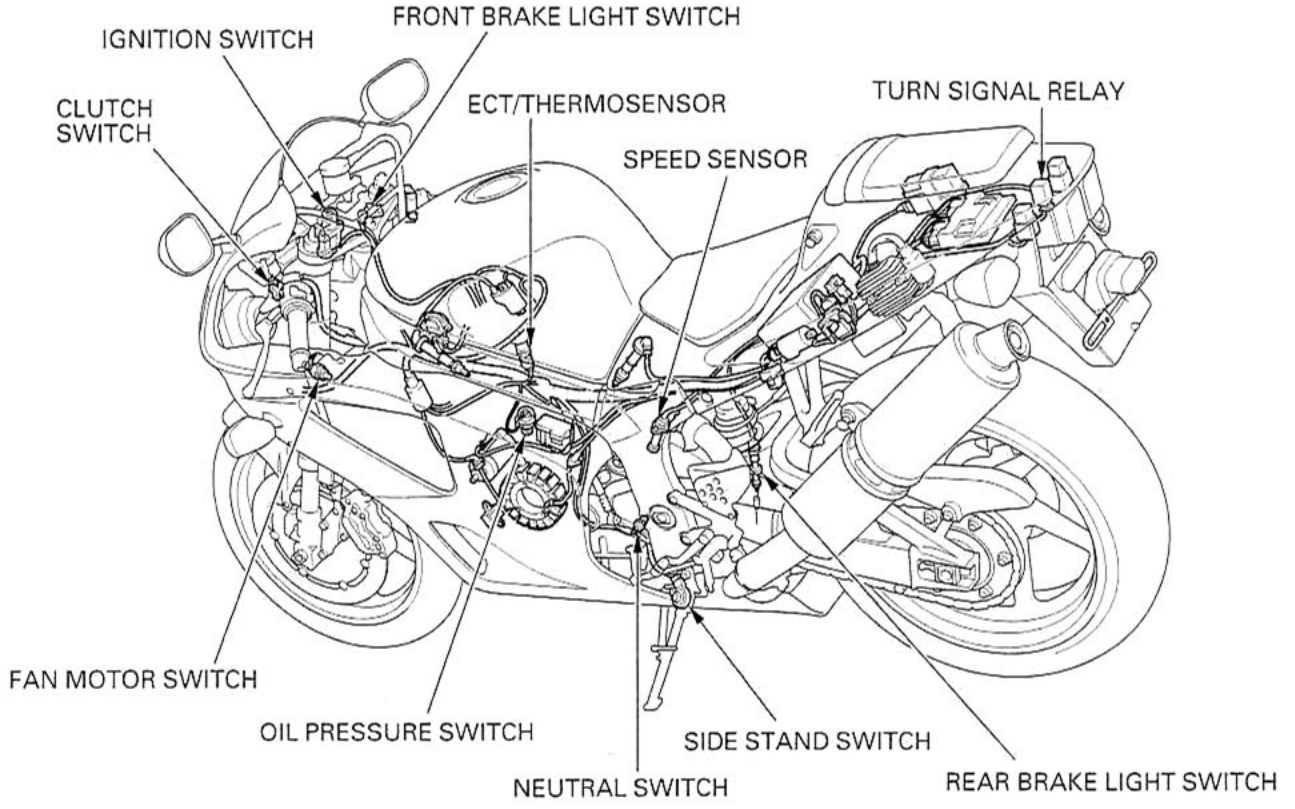

After '01:

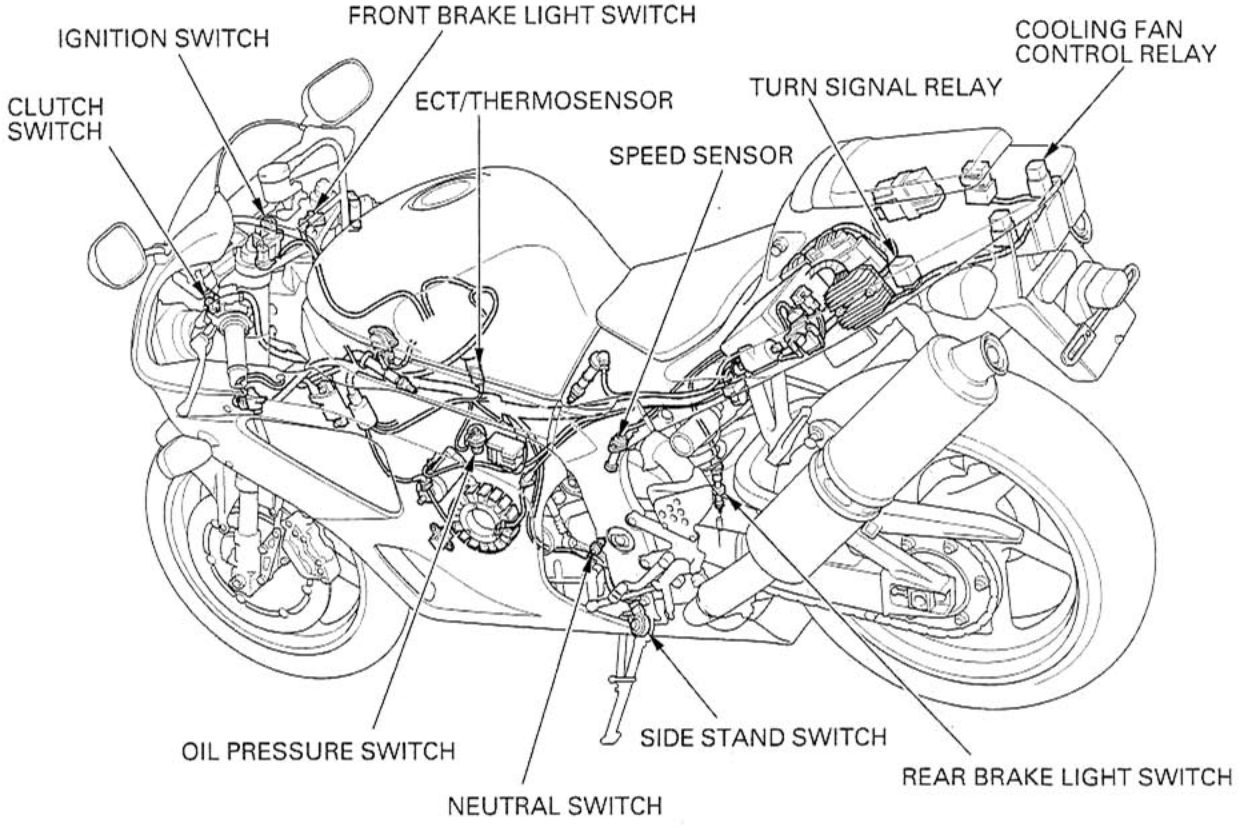

SPECIFICATIONS

ITEM			SPECIFICATIONS
Bulbs	Headlight (High beam)		12 V−55 W
	Headlight (Low beam)		12 V−55 W
	Front turn signal/running light		12V−32/3 cp × 2
	Rear turn signal light	'00−'01	12V−32 cp × 2
		After '01	12V−23W × 2
	Brake/taillight	'00−'01	12V−21/5W × 2
		After '01	12V−23/8W × 2
	License light		12V−8W
Fuse	Main fuse		30A
	FI fuse		30A
	Sub-fuse	'00−'01	10 A × 5, 20 A × 1
		After '01	10 A × 4, 20 A × 2
Thermosensor resistance	At 80°C (176°F)		47−57 Ω
	At 120°C (248°F)		14−18 Ω
Fan motor switch ('00−'01)	Starts to close (ON)		98−102 °C (208−216 °F)
	Starts to open (OFF)		93−97 °C (199−207 °F)
ECT sensor resistance	At 80°C (176°F)		310−326 Ω
	At 110°C (230°F)		139.9−143.5 Ω

TORQUE VALUES

ECT/thermosensor	23 N·m (2.3 kgf·m , 17 lbf·ft)	
Fan motor switch	18 N·m (1.8 kgf·m , 13 lbf·ft)	
Oil pressure switch	12 N·m (1.2 kgf·m , 9 lbf·ft)	Apply sealant to the threads.
Oil pressure switch terminal screw	2 N·m (0.2 kgf·m , 1.4 lbf·ft)	
Ignition switch mounting bolt	25 N·m (2.5 kgf·m , 18 lbf·ft)	
Neutral switch	12 N·m (1.2 kgf·m , 9 lbf·ft)	
Side stand switch bolt	10 N·m (1.0 kgf·m , 7 lbf·ft)	

TOOL

Peak voltage tester (U.S.A. only) or Peak voltage adaptor	07HGJ-0020100 (not available in U.S.A.) with commercially available digital multimeter (impedance 10 MΩ/DCV minimum) or IgnitionMate peak voltage tester, MTP-08-0193 (U.S.A. only)

TROUBLESHOOTING (After '01)

RADIATOR FAN CONTROLS

CIRCUIT SCHEMATIC

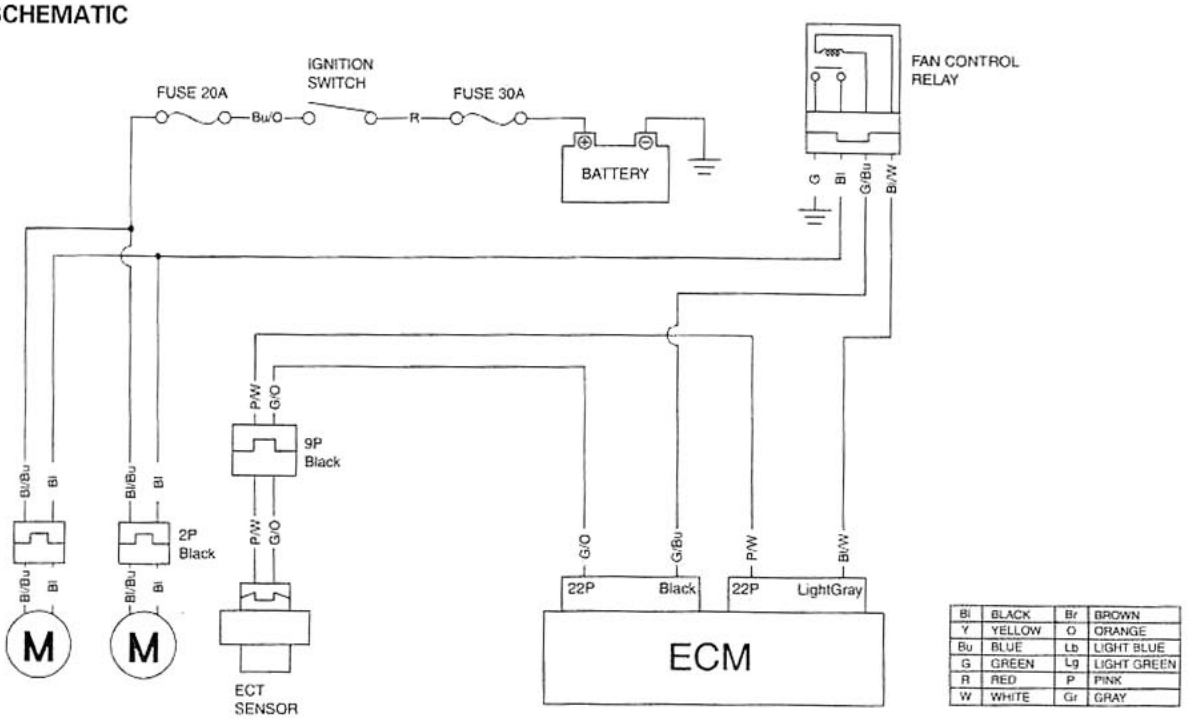

TROUBLESHOOTING

SYMPTOM	DIAGNOSIS
• Radiator fans inoperative	• Blown Fuse (20A) • Perform Test A
• Radiator fans run continuously	• Perform Test B
• Only one radiator fan is operative	• Perform Test C

TEST A

Remove the seat cowl (page 2-2).
Disconnect the fan control relay connector.
Check for continuity between the Green wire on the harness side of the fan control relay and body ground.
Does continuity exist ?

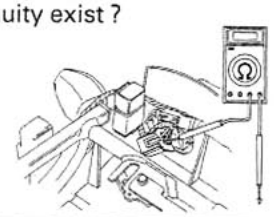

NO → • Repair the open in the Green circuit between the fan control relay and Ground.

YES ↓

To page 19-4

From page 19-3

Turn the ignition switch to "ON".
Connect a jumper wire between the Black wire and body ground.
Do the radiator fans operate ?

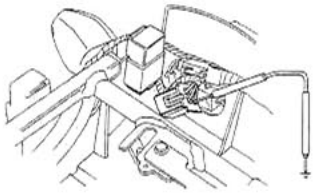

YES → • Perform Test B.

NO ↓

Remove the lower inner fairing (page 2-3).
Disconnect the radiator fan connectors.
Measure the voltage between the Black/Blue wires on the harness side and body ground.
Is battery voltage present ?

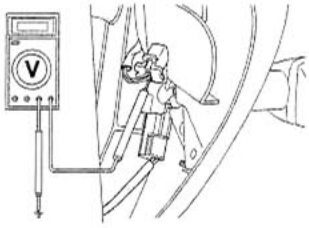

YES → • Repair the open or short in the Black circuit between the fan control relay and radiator fans.

NO → • Repair the open or short in the Black/Blue circuit between the radiator fans and fuse (20A) at the fuse box.

TEST B

Check for operation of the fan control relay (page 19-24).
Does the relay operate ?

NO → • Replace the fan control relay.

YES ↓

To page 19-5

From page 19-4

Check for continuity between the Black/White circuit on the harness side of the fan control relay and ECM gray connector.
Does continuity exist ?

NO → • Repair the open or short in the Black/White circuit between the fan control relay and ECM.

YES ↓

Check for continuity between the Green/Blue circuit on the harness side of the fan control relay and ECM black connector.
Does the continuity exist ?

NO → • Repair the open or short in the Green/Blue circuit between the fan control relay and ECM.

YES ↓

Connect the disconnected connectors.
Start the engine and run until operating temperature is reached.
Stop the engine.
Disconnect the ECM connectors.
Measure the resistance between the Pink/White wire and Green/Orange wire on the harness side.
Is the resistance between 310 Ω (80°C/176°F) and 140 Ω (110°C/230°F) ?

NO → • Repair the open or short in the Pink/White or Green/Orange circuit between the ECM and ECT sensor.
Replace the ECT sensor.

YES ↓

• Replace the ECM with a good one and inspect again.

TEST C

Disconnect the inoperative radiator fan connector.
Turn the ignition switch to "ON".
Measure the voltage between the Black/Blue circuit on the harness side of the inoperative radiator fan connector and body ground.
Is battery voltage present ?

NO → • Repair the open or short in the Black/Blue circuit between the inoperative radiator fan and fuse (20 A) at the fuse box.

YES ↓

To page 19-6

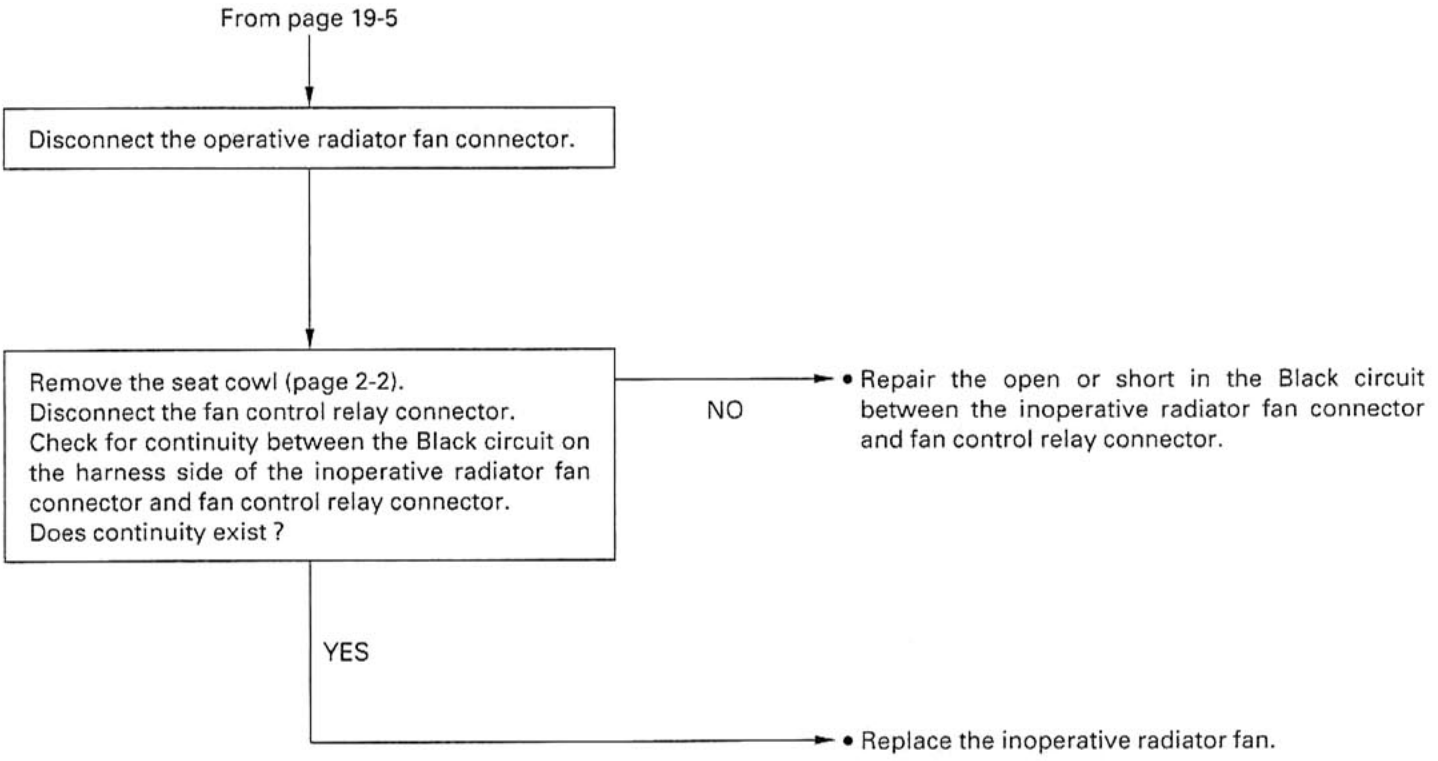
From page 19-5
Disconnect the operative radiator fan connector.
Remove the seat cowl (page 2-2).
Disconnect the fan control relay connector.
Check for continuity between the Black circuit on the harness side of the inoperative radiator fan connector and fan control relay connector.
Does continuity exist ?
NO
• Repair the open or short in the Black circuit between the inoperative radiator fan connector and fan control relay connector.
YES
• Replace the inoperative radiator fan.

HEADLIGHT

HEADLIGHT BULB REPLACEMENT

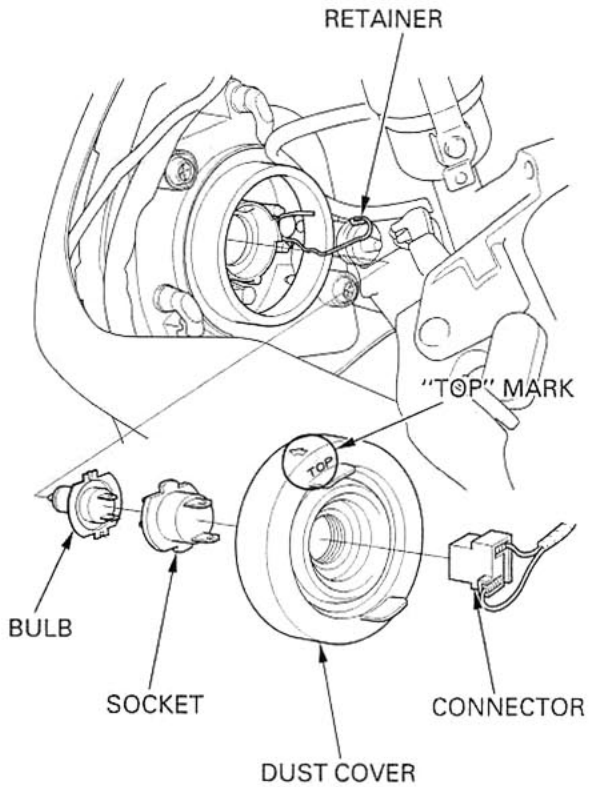

NOTICE

A halogen headlight bulb becomes very hot while the headlight is on, and will remain hot for a while after it is turned off. Be sure to let it cool down before servicing.

Disconnect the headlight connector.
Remove the dust cover.
Unhook the bulb retainer, remove the bulb socket and replace the headlight bulb with a new one.

NOTICE

Avoid the touching halogen headlight bulb. Finger prints can create hot spots that may cause the bulb to break.

If you touch the bulb with your bare hands, clean it with a cloth moistened with alcohol to prevent its early failure.

Install the bulb/socket into the headlight and hook the bulb retainer properly.
Install the dust cover properly onto the headlight with the "TOP" mark facing up.
Connect the headlight connector.

REMOVAL/INSTALLATION

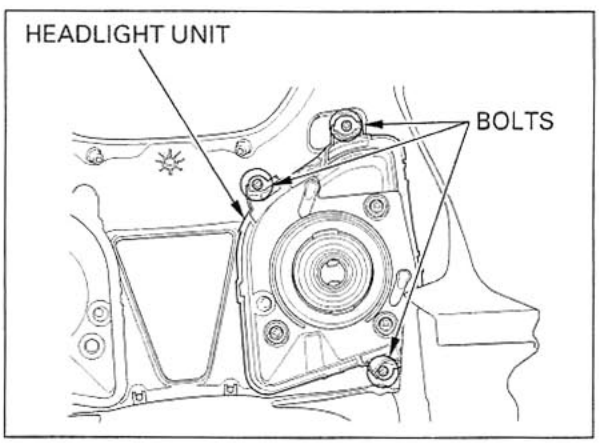

Remove the upper fairing (page 2-5).

Remove the three screws and the headlight unit.

Install the headlight unit in the reverse order of removal.

TURN SIGNAL LIGHT

BULB REPLACEMENT

Remove the screw and turn signal light lens.
While pushing the bulb in, turn it counterclockwise to remove it, and replace it with a new one.

Make sure the rubber seal is installed in position and is in good condition, and replace it with a new one if necessary.
Install the lens by aligning the hook with the tab of the turn signal light, and tighten the screw.

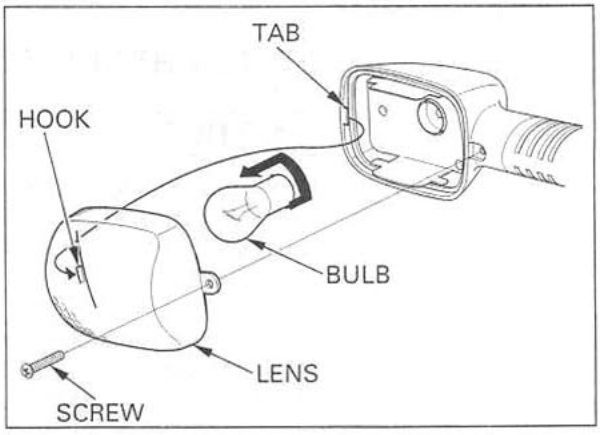

REMOVAL/INSTALLATION

Front: Remove the lower inner fairing (page 2-3).
Rear: ('00 – '01: Remove the engine control module (ECM) holder) and disconnect the turn signal light connector.

Remove the nut, setting plate and the turn signal light.

Install the turn signal light in the reverse order of removal.

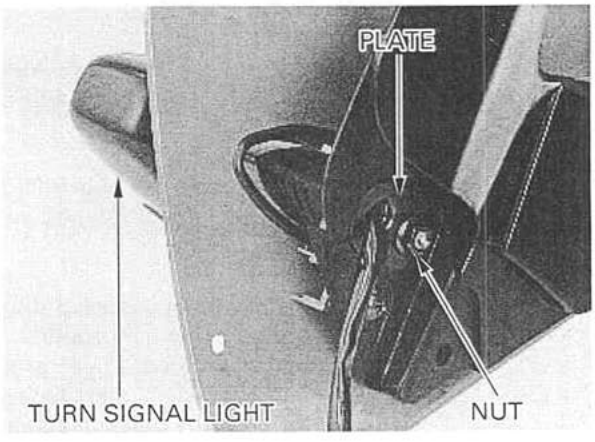

BRAKE/TAIL LIGHT

BULB REPLACEMENT

Remove the passenger seat (page 2-2).

'00– '01: Remove the turn signal relay from the stay.
Turn the bulb socket counterclockwise and remove it from the brake/taillight.
Pull the brake/taillight bulb out of the socket and replace it with a new one.
Install the socket by turning it clockwise.

Install the passenger seat (page 2-2).

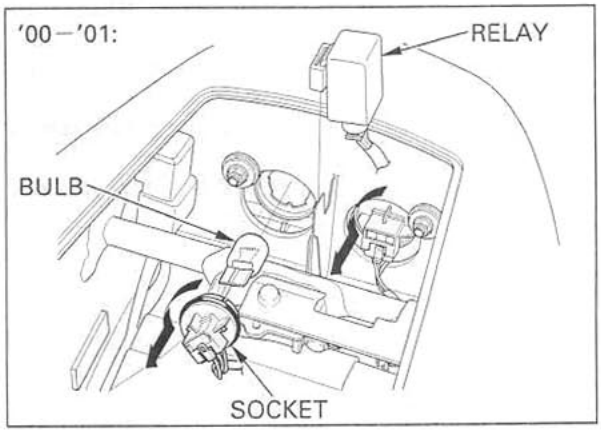

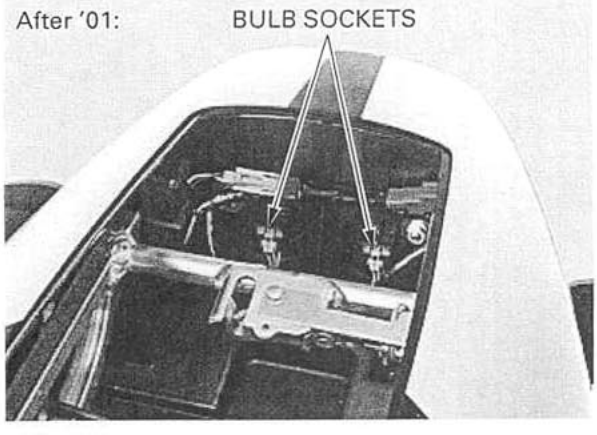

REMOVAL/INSTALLATION

Remove the seat cowl (page 2-2).

Remove the two nuts, washers and the brake/taillight.
Disconnect the brake/taillight connectors.

Install the brake/taillight in the reverse order of removal.

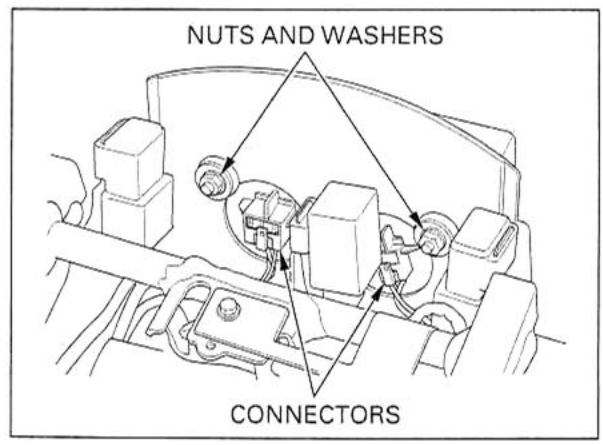

LICENSE LIGHT

BULB REPLACEMENT

Remove the two nuts, collar, bolts and the number plate bracket from the rear fender.

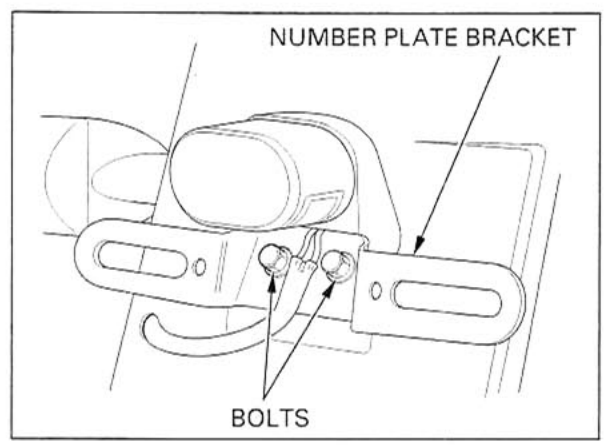

Remove the two attaching nuts, lens cover, lens and license light base from the number plate bracket.

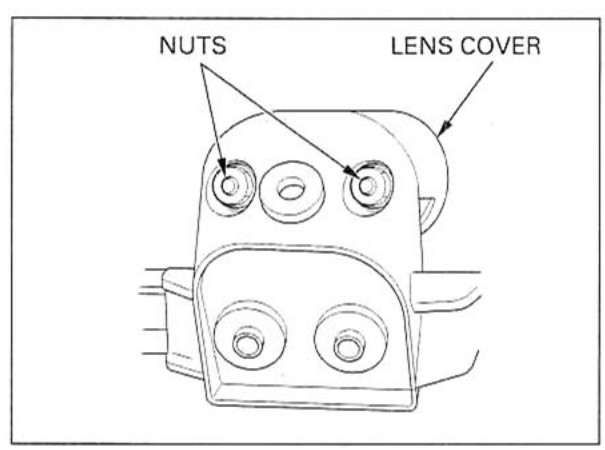

While pushing the bulb in, turn it counterclockwise to remove it, and replace it with a new one.

Make sure the rubber seal is installed in position and is in good condition, and replace it with new one if necessary.

Install the removed parts in the reverse order of removal.

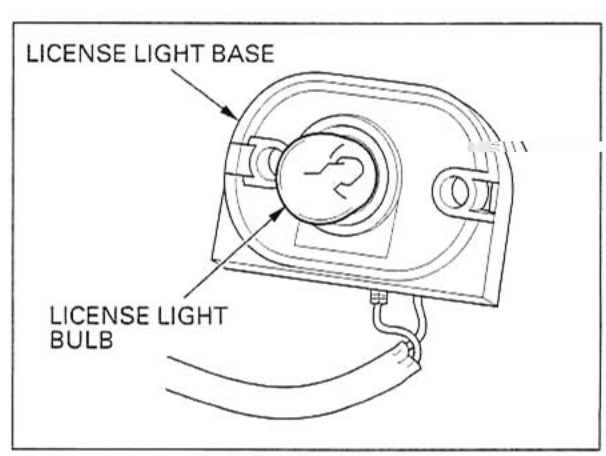

COMBINATION METER

REMOVAL/INSTALLATION

Remove the upper fairing (page 2-5).

Remove the three mounting screws, washers and the combination meter.
Disconnect the combination meter connector.

Install the combination meter in the reverse order of removal.

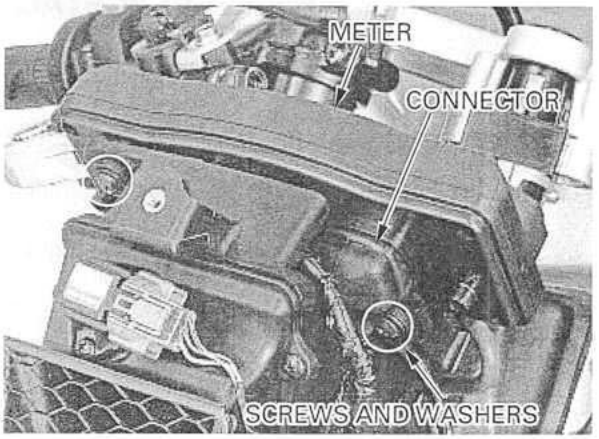

DISASSEMBLY/ASSEMBLY

Remove the seven screws.

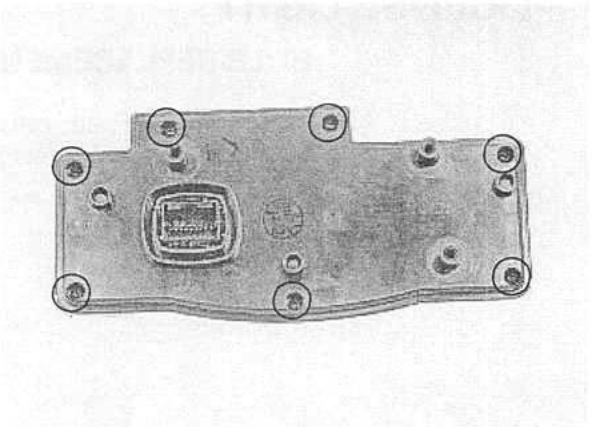

Remove the meter upper case, printed circuit board and lower case.

Assemble the meter upper case, printed circuit board and lower case and tighten the seven screws.

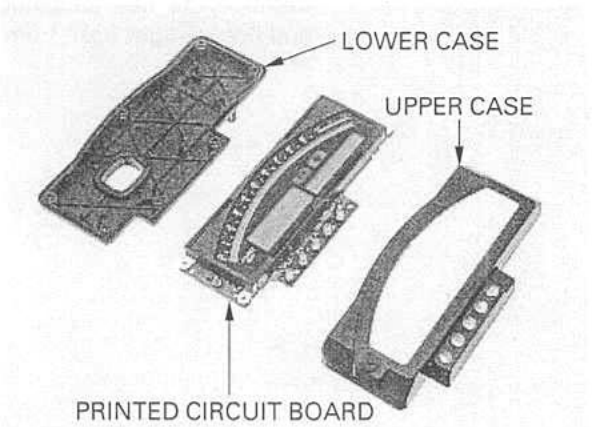

POWER/GROUND LINE INSPECTION

Remove the combination meter.
Check the following at the wire harness side connector of the combination meter:

POWER INPUT LINE

Measure the voltage between the black/brown wire terminal (+) and ground (−).
There should be battery voltage with the ignition switch turned to "ON".
If there is no voltage, check the following:
− open circuit in black/brown wire
− blown sub-fuse (10 A) (Meter/tail/illumination)

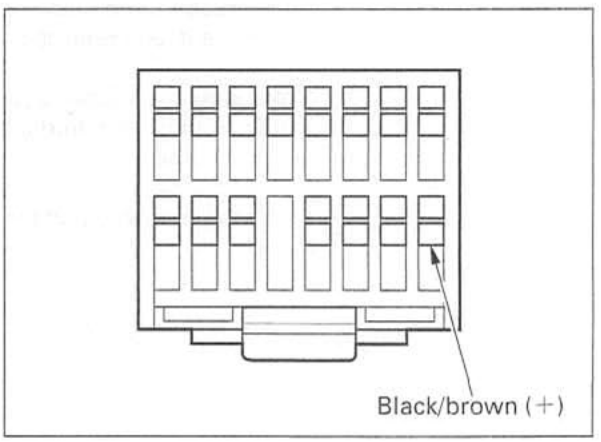

METER GROUND LINE

Check for continuity between the green/black wire terminal and ground.
There should be continuity at all times.
If there is no continuity, check for an open circuit in the green/black wire.

GROUND LINE

Check for continuity between the green wire terminal and ground.
There should be continuity at all times.
If there is no continuity, check for an open circuit in the green wire.

BACK-UP VOLTAGE LINE

Check this line if the odometer/trip meter does not operate.
Measure the voltage between the red/green wire terminal (+) and ground (−).
There should be battery voltage at all times.
If there is no voltage, check the following:
− open circuit in red/green wire
− blown sub-fuse (10 A) (Odometer)
− open circuit in red wire

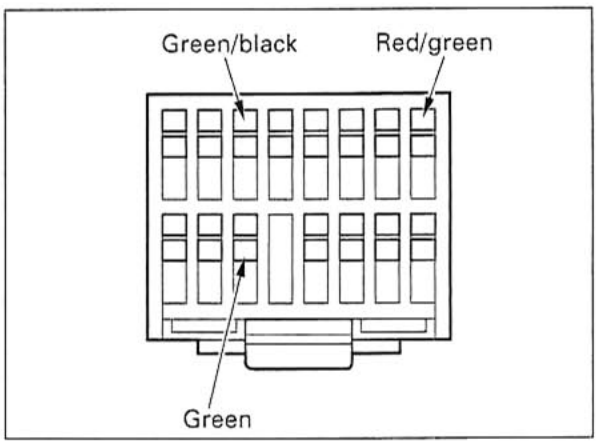

SPEEDOMETER/SPEED SENSOR

SYSTEM INSPECTION

Check that the tachometer and coolant temperature gauge function properly.

- If they do not function properly, perform the power/ground line inspection of the combination meter.
- If they function, remove the combination meter (page 19-6). Shift the transmission to neutral and turn the ignition switch to "ON".
  Measure the voltage between the pink/green (+) and green/black (−) wire terminals of the wire harness side combination meter connector.
  Slowly turn the rear wheel by hand.
  There should be 0 V to 5 V pulse voltage.

− If pulse voltage appears, replace the printed circuit board.
− If pulse voltage does not appear, check for open or short circuit in the pink/green wire. If the pink/green wire is OK, check the speed sensor (page 19-12).

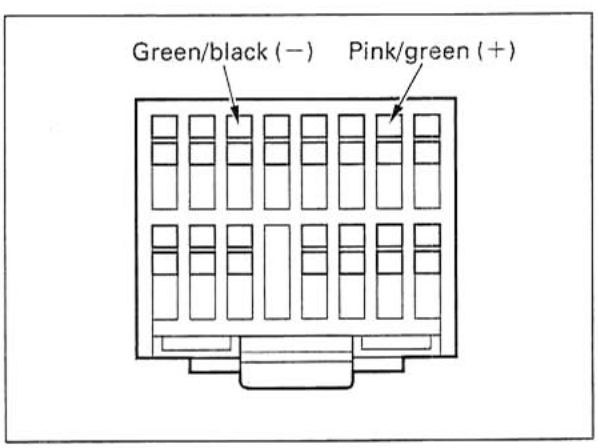

SPEED SENSOR INSPECTION

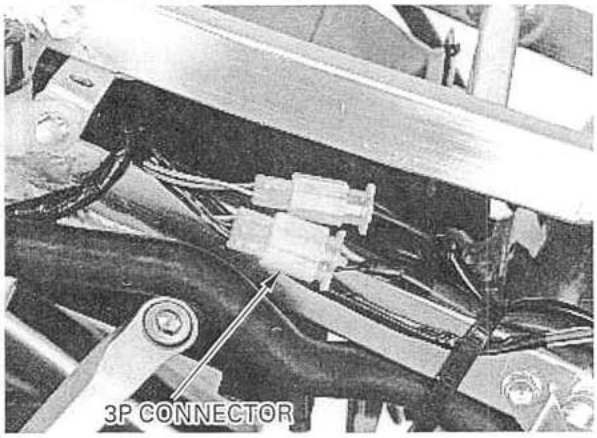

Remove the seat cowl (page 2-2).

Turn the ignition switch to "ON" and measure the voltage between the black/brown (+) and green/black (−) wire terminals of the speed sensor 3P connector with the connector connected.
There should be battery voltage.
If there is no voltage, check for an open circuit in the black/brown and green/black wires.

Shift the transmission to neutral and turn the ignition switch to "ON".
Measure the voltage between the pink/green (+) and green/black (−) wire terminal of the sensor connector with the connector connected.
Slowly turn the rear wheel by hand.
There should be 0 to 5 V pulse voltage.

If pulse voltage does not appear, replace the speed sensor.

SPEED SENSOR REPLACEMENT

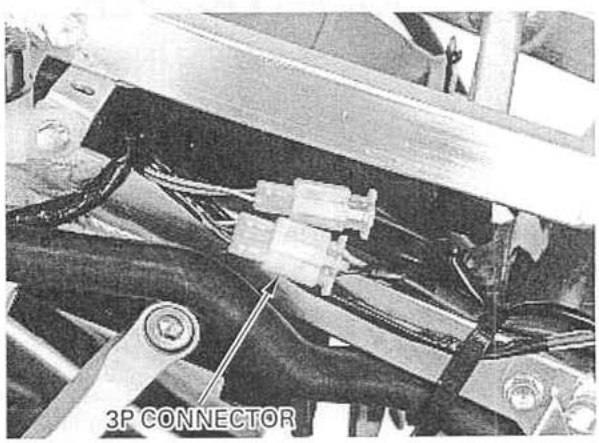

Remove the seat cowl (page 2-2).
Remove the right lower fairing (page 2-4).

Disconnect the speed sensor 3P connector.

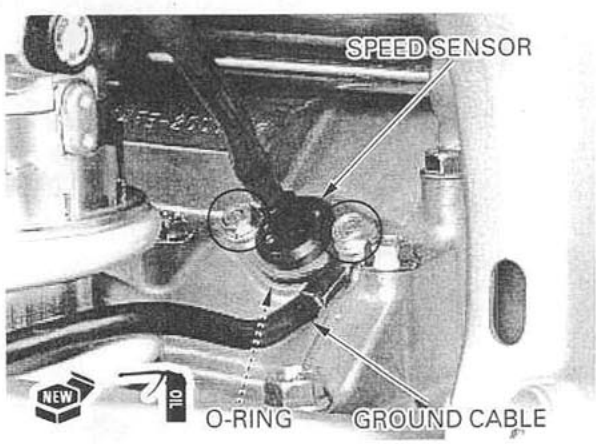

Remove the two bolts, battery ground cable and speed sensor.

Coat a new O-ring with oil and install it onto a new speed sensor.

Route the speed sensor wire properly (page 1-27).

Install the speed sensor in the reverse order of removal.

TACHOMETER

SYSTEM INSPECTION

Check that the speedometer and coolant temperature gauge function properly.

- If they do not function properly, perform the power/ground line inspection of the combination meter (page 19-10).
- If they function, remove the combination meter, but do not disconnect the connector (page 19-10). Connect the peak voltage tester or adaptor probes to the yellow/green (+) and green/black (−) wire terminals of the combination meter connector with the connector connected.

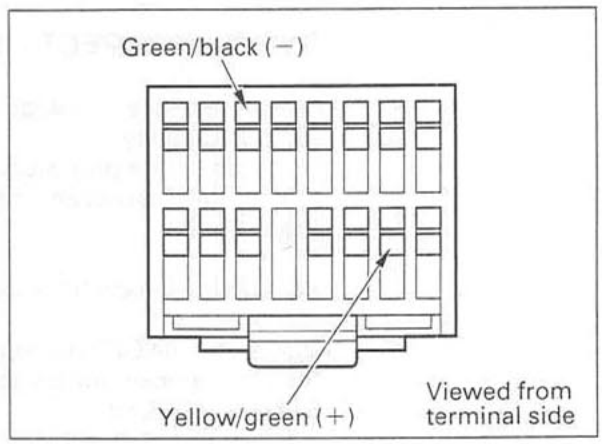

TOOLS:
Peak voltage tester (U.S.A. only) or
Peak voltage adaptor 07HGJ-0020100 (not available in U.S.A.)
with commercially available digital multimeter (impedance 10 MΩ/DCV minimum) or
IgnitionMate peak voltage tester, MTP-08-0193 (U.S.A. only)

Start the engine and measure the tachometer signal peak voltage.

PEAK VOLTAGE : 10.5 V minimum

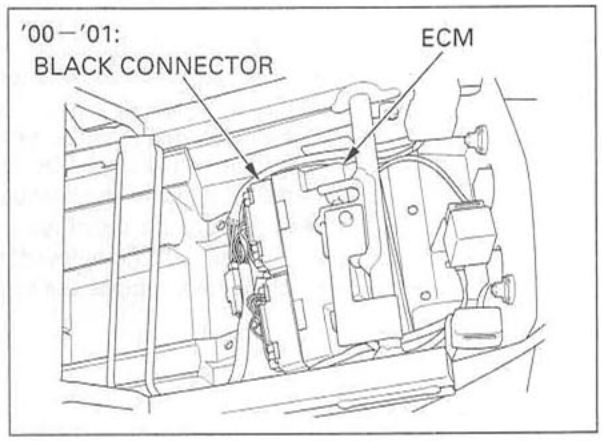

−If the measured value is more than 10.5 V, replace the printed circuit board.
−If the measured value is less than 10.5 V, replace the engine control module (ECM).
−If there is no voltage, disconnect the ECM black connector (page 17-6).
Check the yellow/green wire for continuity between the combination meter and ECM connectors.
There should be continuity.
Check for continuity between the yellow/green wire terminal and ground.
There should be no continuity.

If the yellow/green wire is OK, replace the ECM.

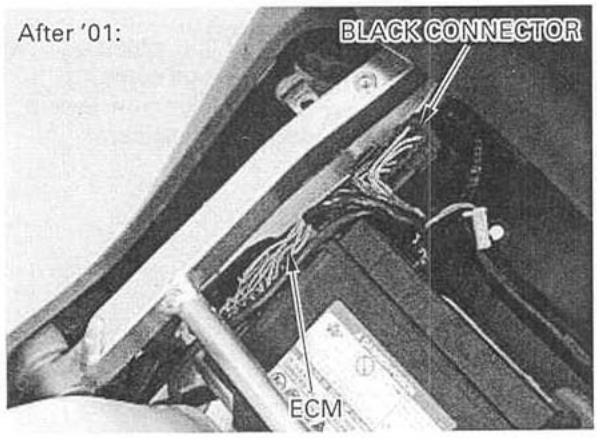

COOLANT TEMPERATURE GAUGE/ INDICATOR/THERMOSENSOR

NOTE:

- The coolant temperature gauge displays "95°F" to "270°F". It displays "− −°F" when the coolant temperature is below 93°F and the displayed figures blink when the coolant temperature is above 251°F.
- The coolant temperature indicator comes on when the coolant temperature is above 251°F.

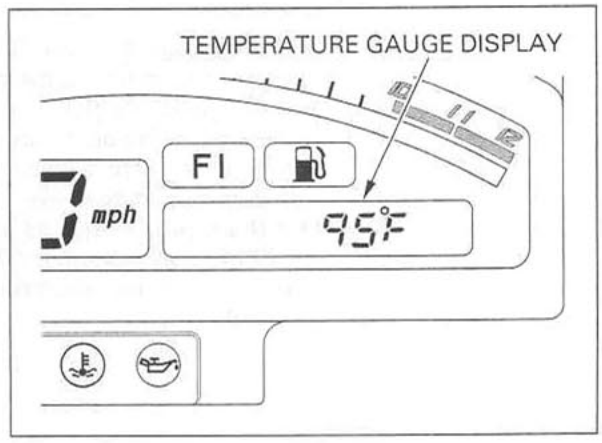

SYSTEM INSPECTION

Check that the speedometer and tachometer function properly.
If they do not function properly, perform the power/ground line inspection of the combination meter (page 19-10).

Remove the throttle body (page 5-61).

Disconnect the ECT/thermosensor connector.
Turn the ignition switch to "ON", and check the gauge and indicator.

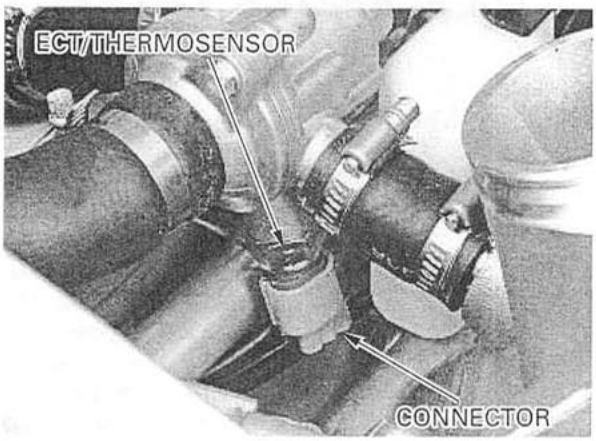

- If the gauge displays "– –°F" and the indicator does not come on, check the thermosensor.
- If the gauge displays "270°F", the figures blink and the indicator comes on, check for a short circuit in the green/blue wire between the ECT/thermosensor and combination meter.
- If the gauge displays any figures other than "– –°F", or it displays "– –°F" but the indicator comes on, replace the printed circuit board.

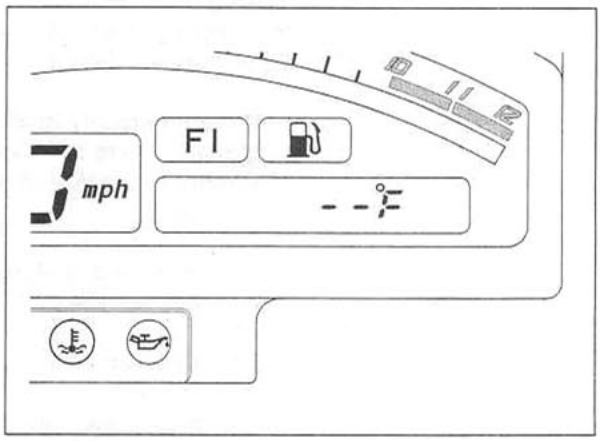

Ground the green/blue wire terminal of the wire harness side connector with a jumper wire.
Turn the ignition switch to "ON", and check the gauge and indicator.

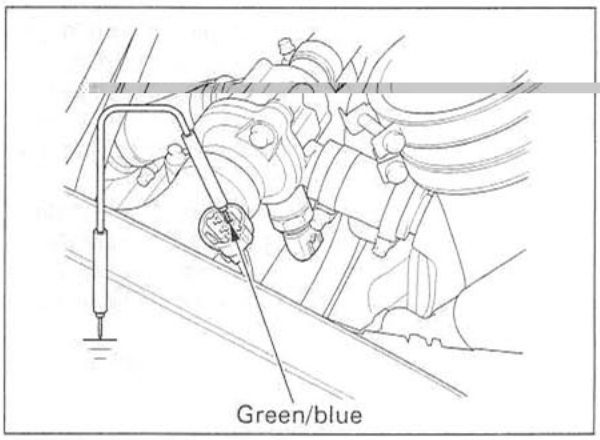

- If the gauge displays "270°F" and the indicator comes on, check the thermosensor.
- If the gauge displays "– –°F" and the indicator does not come on, check for an open circuit in the green/blue wire between the ECT/thermosensor and combination meter.
- If the gauge displays any figures other than "270°F", or it displays "270°F" but the indicator does not come on, replace the printed circuit board.

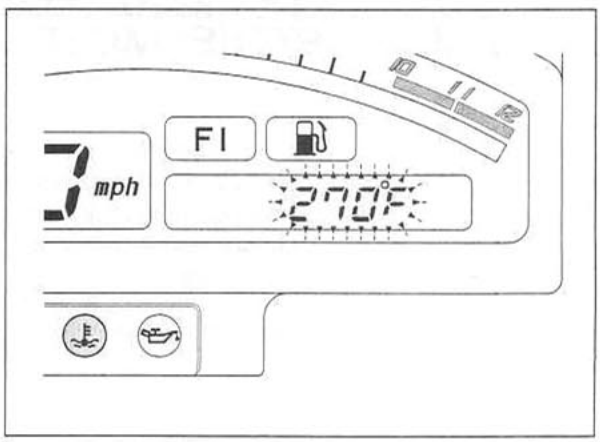

THERMOSENSOR INSPECTION

Remove the throttle body (page 5-61).
Drain the coolant from the system (page 6-5).

Disconnect the ECT/thermosensor connector and remove the thermosensor from the thermostat.

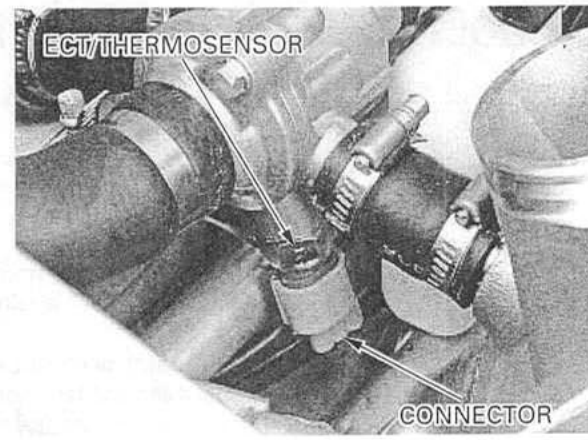

Keep all flammable materials away from the electric heating element. Wear protective clothing, insulated gloves and eye protection.

Suspend the ECT/thermosensor in a pan of coolant (1:1 mixture) on an electric heating element and measure the resistance between the thermosensor terminal and body as the coolant heats up.

NOTE:
- Soak the ECT/thermosensor in coolant up to its threads with at least 40 mm (1.57 in) from the bottom of the pan to the bottom of the sensor.
- Keep the temperature constant for 3 minutes before testing. A sudden change of temperature will result in incorrect readings. Do not let the thermometer or ECT/thermosensor touch the pan.

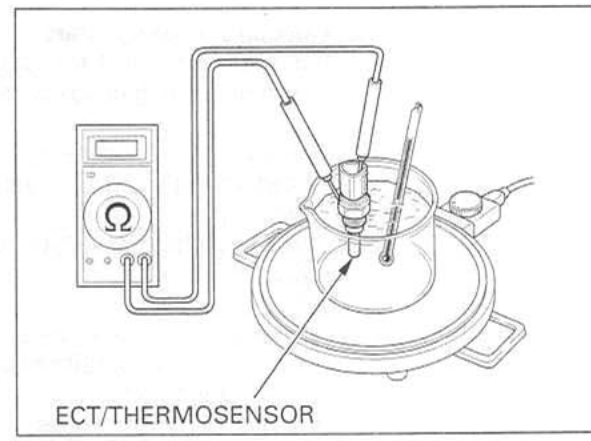

Temperature	80°C (176°F)	120°C (248°F)
Resistance	47 – 57 Ω	14 – 18 Ω

Replace the ECT/thermosensor if it is out of specifications by more than 10% at any temperature listed.

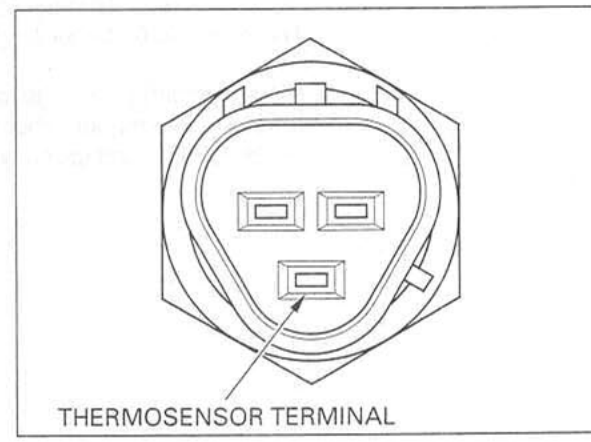

Install the ECT/thermosensor with a new sealing washer and tighten it.

TORQUE: 23 N·m (2.3 kgf·m , 17 lbf·ft)

Connect the thermosensor connector.

Install the throttle body (page 5-72).
Fill and bleed the cooling system (page 6-5).

COOLING FAN MOTOR SWITCH ('00 – '01)

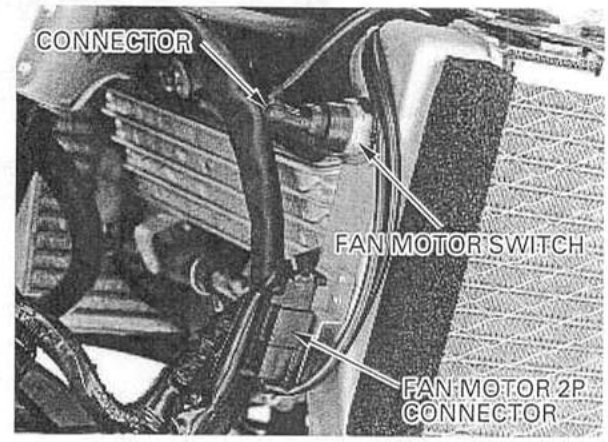

Remove the left lower fairing (page 2-4).

INSPECTION

Fan motor does not stop
Turn the ignition switch to "OFF", disconnect the connector from the fan motor switch and turn the ignition switch to "ON" again.

- If the fan motor does not stop, check for a short circuit between the fan motor and switch.
- If the fan motor stops, replace the fan motor switch.

Fan motor does not start
Before testing, check for a blown fan motor fuse.
Warm up the engine to operating temperature.

Disconnect the connector from the fan motor switch and ground the connector with a jumper wire.
Turn the ignition switch to "ON" and check the fan motor.

- If the motor starts, check the connection at the fan motor switch terminal. If it is OK, replace the fan motor switch.
- If the fan motor does not start, measure the voltage between the black/blue (+) and green (–) wire terminals at the fan motor 2P connector. There should be battery voltage.

– If there is battery voltage, replace the fan motor.
– If there is no voltage, check for an open circuit in the black/blue and green wires.

REMOVAL/INSTALLATION

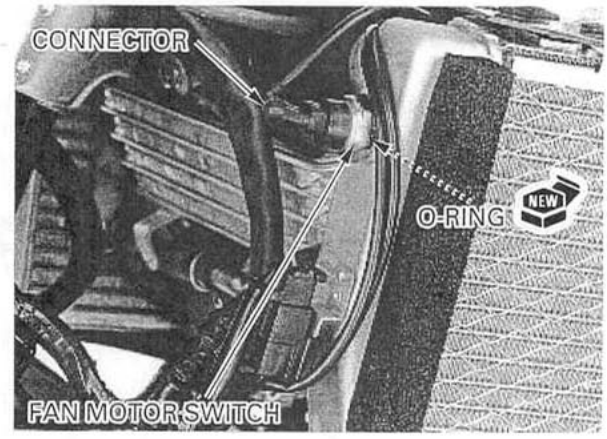

Drain the coolant (page 6-5).

Disconnect the fan motor switch connector and remove the switch.

Install a new O-ring onto the fan motor switch.
Install and tighten the fan motor switch.

TORQUE: 18 N·m (1.8 kgf·m , 13 lbf·ft)

Connect the fan motor switch connector.

Fill and bleed the cooling system (page 6-5).

OIL PRESSURE INDICATOR

INSPECTION

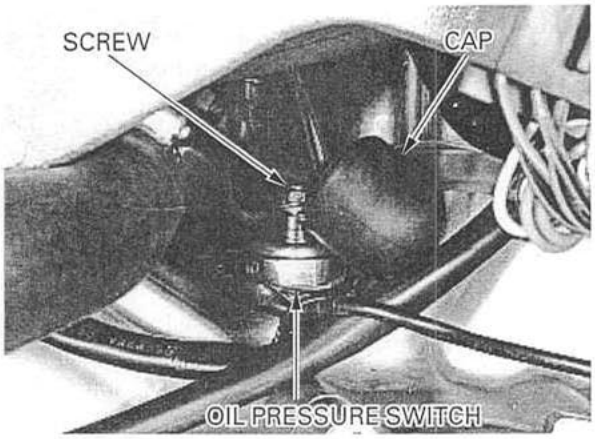

Remove the radiator reserve tank (page 6-11).

Remove the rubber cap, and disconnect the oil pressure switch wire by removing the terminal screw.

Indicator does not come on with the ignition switch turned to "ON"
Ground the wire terminal to the engine with a jumper wire.

Turn the ignition switch to "ON" and check the oil pressure indicator.

- If the indicator comes on, replace the oil pressure switch.
- If the indicator does not come on, check for an open circuit in the blue/red wire between the oil pressure switch and combination meter.

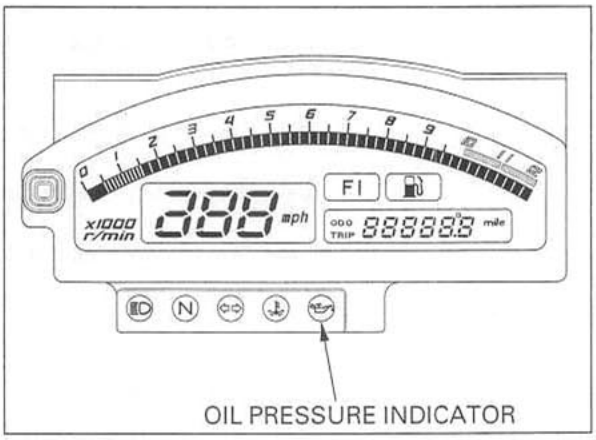

Indicator stays on while the engine is running
Check for continuity between the wire terminal and ground.

- If there is continuity, check for a short circuit in the blue/red wire between the oil pressure switch and combination meter.
- If there is no continuity, check the oil pressure (page 4-4).
  If the oil pressure is normal, replace the oil pressure switch.

REPLACEMENT

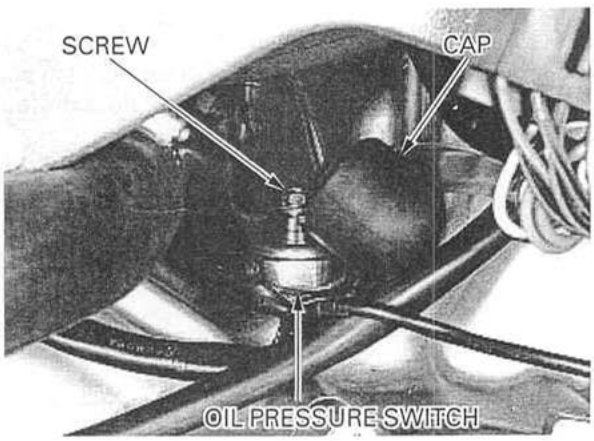

Remove the radiator reserve tank (page 6-11).

Remove the rubber cap, and disconnect the oil pressure switch wire by removing the terminal screw.
Remove the oil pressure switch.

To prevent crankcase damage, do not overtighten the switch.

Apply sealant to the oil pressure switch threads as shown and install it.

TORQUE: 12 N·m (1.2 kgf·m , 9 lbf·ft)

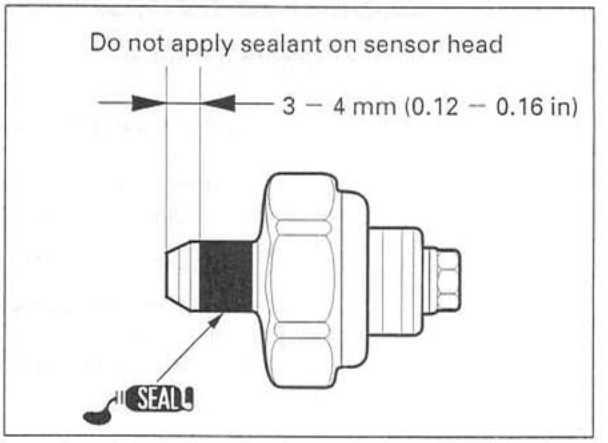

Connect the oil pressure switch wire and tighten the terminal screw.

TORQUE: 2 N·m (0.2 kgf·m , 1.4 lbf·ft)

Install the rubber cap properly.

Install the radiator reserve tank (page 6-11).

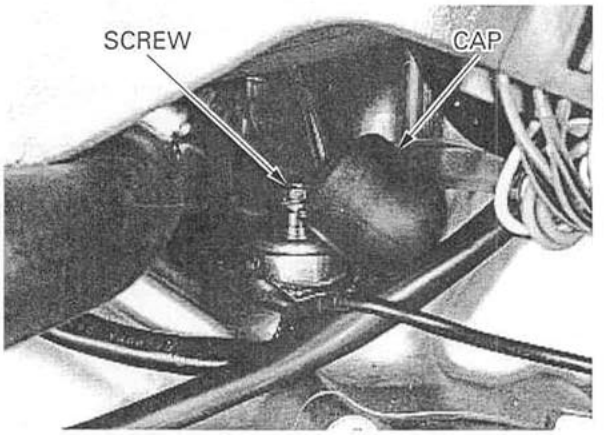

IGNITION SWITCH

INSPECTION

Remove the upper fairing (page 2-5).

Disconnect the ignition switch 3P (white) connector.

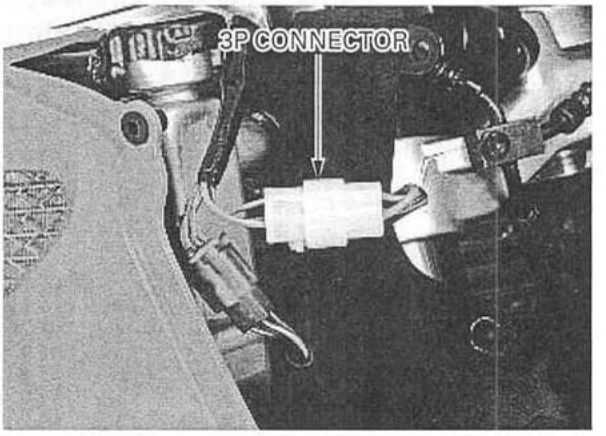

Check for continuity between the connector terminals in each switch position.
Continuity should exist between the color coded wires as follows:

Position \ Color	R	R/Bl	Bu/O
ON	○	○	○
OFF			
LOCK			

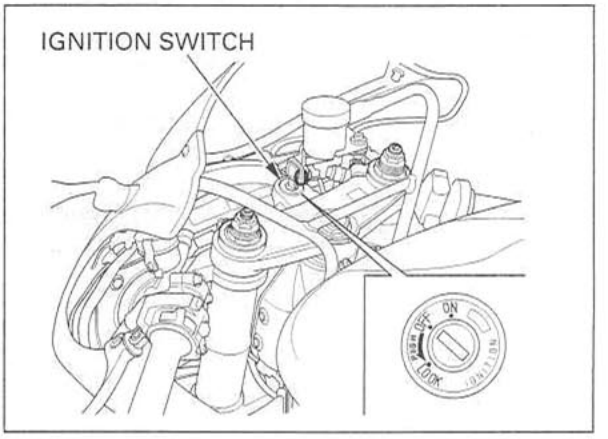

REMOVAL/INSTALLATION

Disconnect the ignition switch 3P (white) connector.

Remove the two mounting bolts and the ignition switch.

Install the ignition switch and tighten the mounting bolts.

TORQUE: 25 N·m (2.5 kgf·m , 18 lbf·ft)

Install the removed parts in the reverse order.

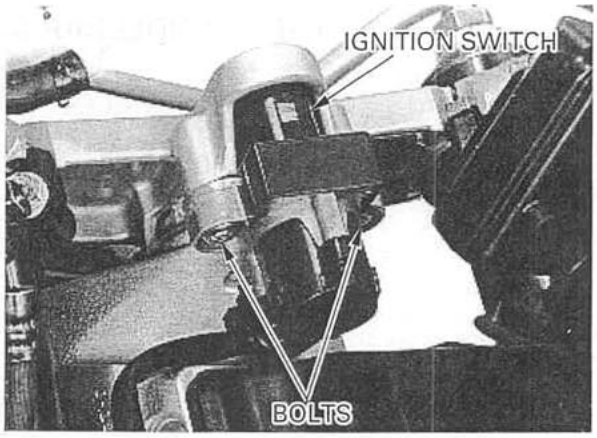

HANDLEBAR SWITCHES

Remove the upper fairing (page 2-5).

Disconnect the right handlebar switch 6P connectors and left handlebar switch 9P connector.
Check for continuity between the connector terminals in each switch position.
Continuity should exist between the color coded wires as shown in the charts below.

RIGHT HANDLEBAR SWITCH

ENGINE STOP SWITCH

Position \ Color	Bl	Bl/W
OFF		
RUN	○	○

STARTER SWITCH

Position \ Color	Y/R	Bl/R	Bu/W
FREE		○	○
PUSH	○	○	

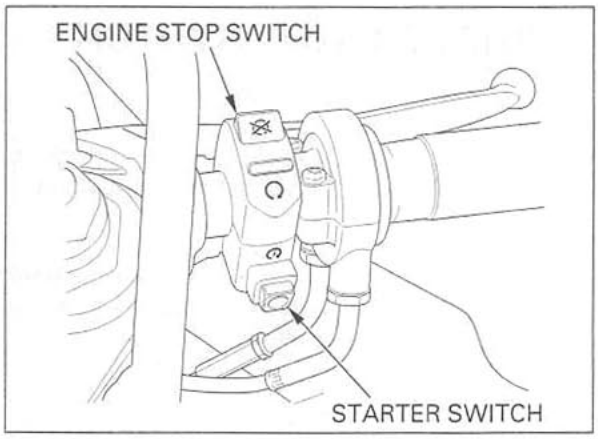

LEFT HANDLEBAR SWITCH

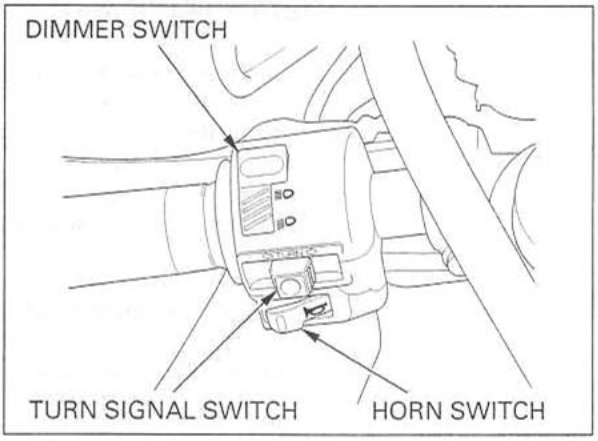

DIMMER SWITCH

Position \ Color	Bu	Bu/W
H	○—○	
(N)	○—○	
L		

HORN SWITCH

Position \ Color	W/G	Lg
FREE		
PUSH	○—○	

TURN SIGNAL SWITCH

Position \ Color	O	Gr	Lb	O/W	Bl/Br	Lb/W
L	○—○				○—○	
(N)				○—○	○—○	
R		○—○		○—○		

BRAKE LIGHT SWITCH

FRONT

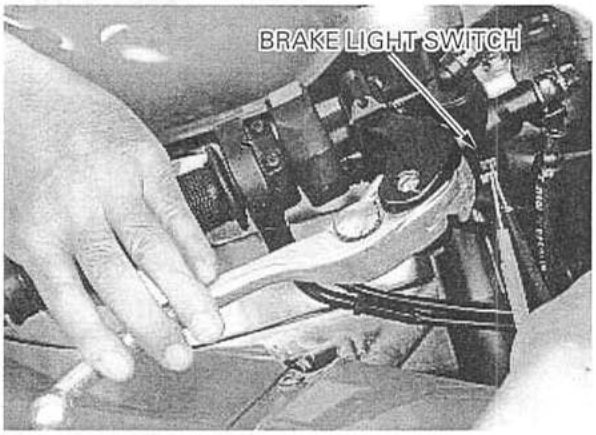

Disconnect the front brake light switch connectors and check for continuity between the switch terminals.

There should be continuity with the front brake lever squeezed and no continuity with the lever released.

REAR

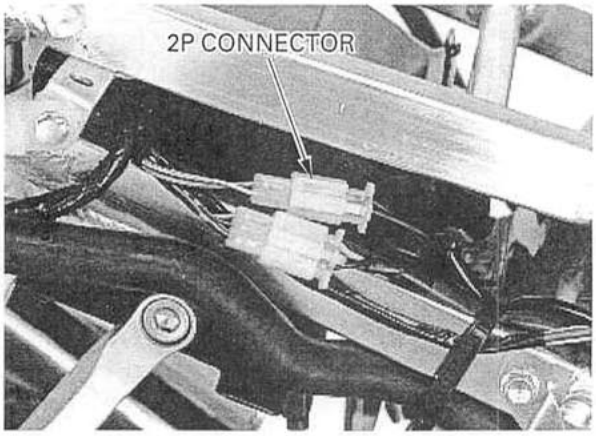

Remove the seat cowl (page 2-2).

Disconnect the rear brake light switch 2P (white) connector and check for continuity between the connector terminals.

There should be continuity with the rear brake pedal depressed and no continuity with the pedal released.

SIDE STAND SWITCH

Raise the front of the fuel tank and support it (page 3-4).

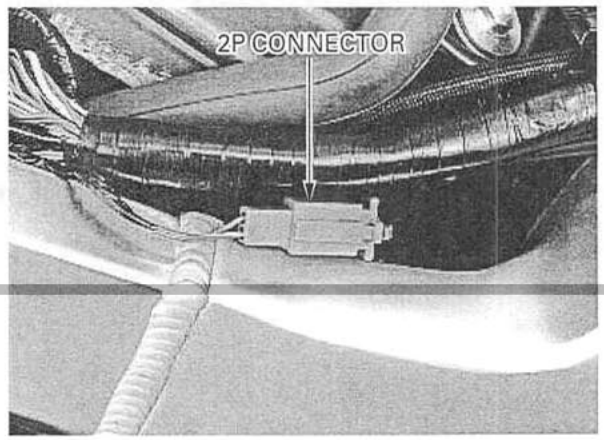

INSPECTION

Disconnect the side stand switch 2P (green) connector.
Check for continuity between the connector terminals.
There should be continuity with the side stand retracted and no continuity with the side stand lowered.

REMOVAL/INSTALLATION

Remove the left lower fairing (page 2-4).

Disconnect the side stand switch 2P (green) connector.
Remove the side stand switch bolt and the switch.

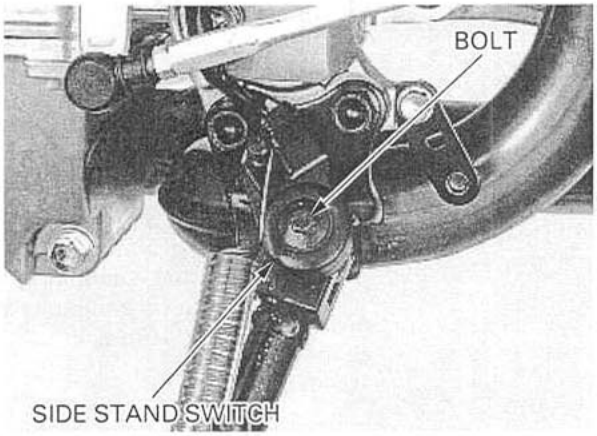

Install the side stand switch by aligning the switch pin with the side stand hole and the switch groove with the bracket pin.
Install the side stand switch bolt and tighten it.

TORQUE: 10 N·m (1.0 kgf·m , 7 lbf·ft)

Route the side stand switch wire properly (page 1-25).

Install the removed parts in the reverse order.

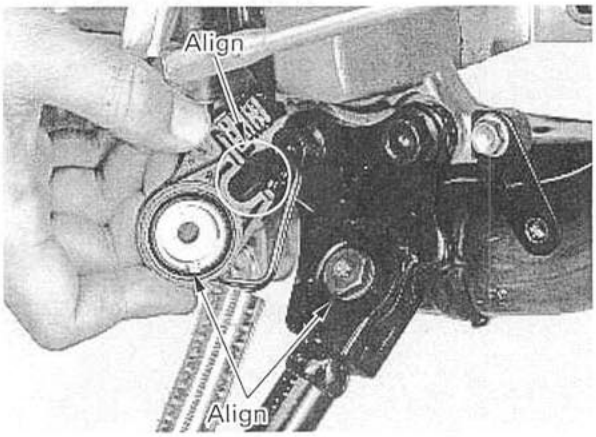

LOW FUEL INDICATOR

Remove the seat cowl (page 2-2).

Low fuel indicator does not go off
Disconnect the fuel pump unit connector.
Turn the ignition switch to "ON" and check the low fuel indicator.

- If the indicator does not come on, replace the fuel pump unit.
- If the indicator comes on, check for a short circuit in the brown/black wire between the fuel pump unit connector and combination meter.

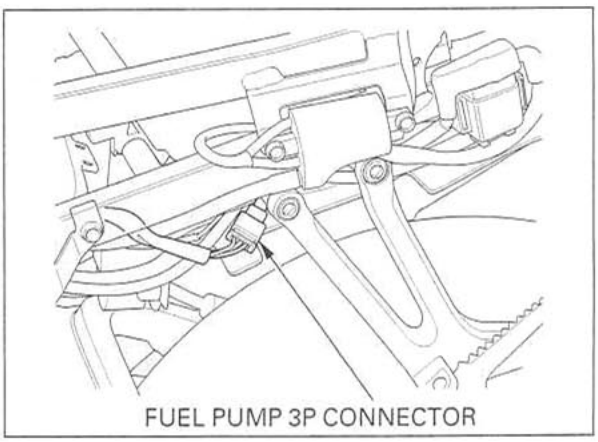

Low fuel indicator does not come on
Check that the speedometer, tachometer and coolant temperature gauge function properly.

- If they do not function, perform the power/ground line inspection of the combination meter (page 19-10).
- If they function, disconnect the fuel pump unit connector and ground the brown/black wire terminal of the wire harness side connector with a jumper wire.
  Turn the ignition switch to "ON" and check the low fuel indicator.

– If the indicator comes on, replace the fuel pump unit.
– If the indicator does not come on, check for an open circuit in the brown/black wire between the fuel pump unit connector and combination meter. If they are OK, replace the combination meter (page 19-10).

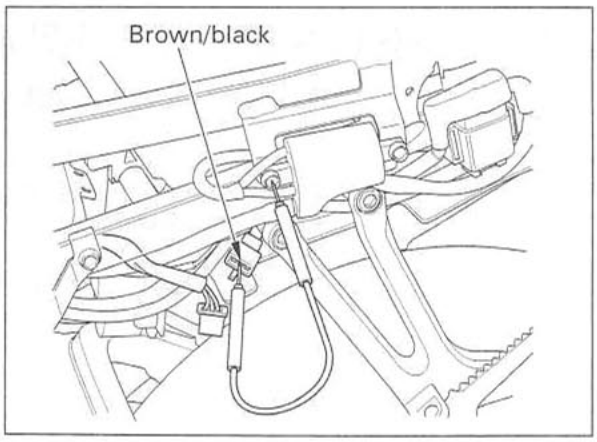

HORN

Remove the lower inner fairing (page 2-3).

Disconnect the wire connectors from the horn.
Connect a 12 V battery to the horn terminals.

The horn is normal if it sounds when the 12 V battery is connected across the horn terminals.

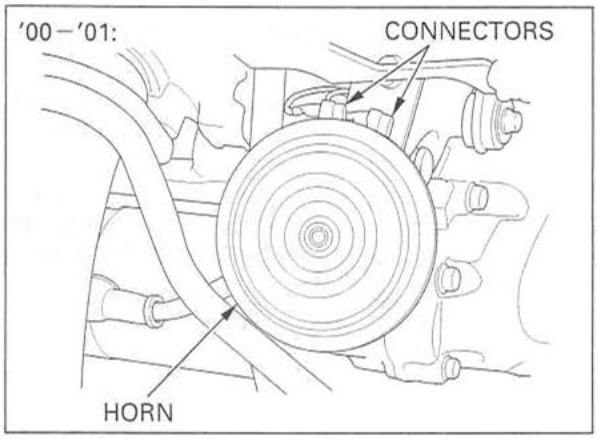

TURN SIGNAL RELAY

Turn signal light does not blink
Remove the seat cowl (page 2-2).

Remove the turn signal relay from the stay and disconnect the connector.
Connect the white/green and gray wire terminals of the wire harness side connector with a jumper wire.
Turn the ignition switch to "ON" and check the turn signal light by operating the turn signal switch.

- If the light does not come on, check for an open circuit in the white/green and gray wires.
- If the light comes on, check for continuity between the green wire terminal and body ground.

– If there is no continuity, check for an open circuit in the green wire.
– If there is continuity, check the connector terminals for loose or poor contact.
  If the connector terminals are OK, replace the turn signal relay.

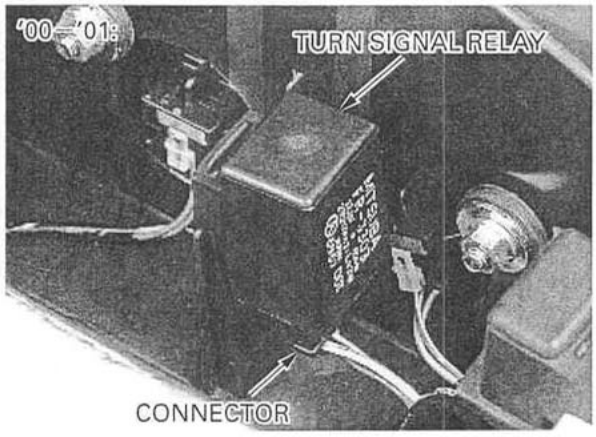

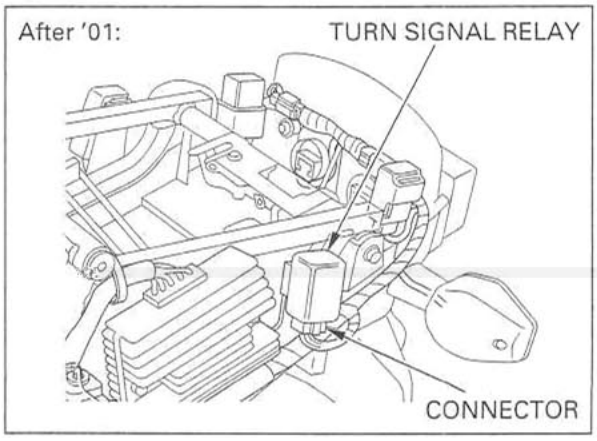

COOLING FAN CONTROL RELAY (After '01)

REMOVAL/INSTALLATION

Remove the seat cowl (page 2-2).
Remove the cooling fan control relay and disconnect the connector.

Install the cooling fan control relay in the reverse order of removal.

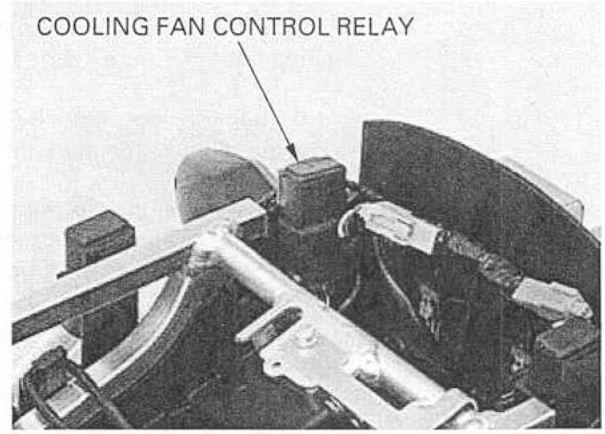

OPERATION CHECK

Remove the cooling fan control relay.
Connect the 12 V battery to terminal A (+) and terminal B (−).
There should be continuity between terminal C and terminal D when the battery is connected, and no continuity when the battery is disconnected.

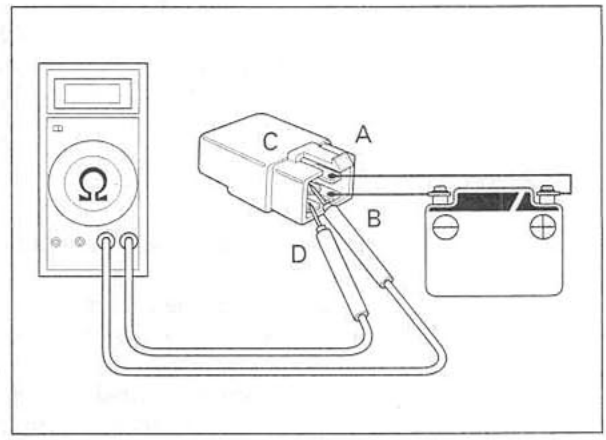

From page 21-2

		Possible cause
10. Remove cylinder head cover and inspect lubrication	Valve train not lubricated properly	• Clogged oil passage
Valve train lubricated properly		
11. Check for engine overheating	Overheating	• Coolant level too low • Fan motor not working (Faulty fan motor or fan motor switch) • Thermostat stuck closed • Excessive carbon build-up in combustion chamber • Use of poor quality fuel • Clutch slipping • Wrong type of fuel
Not overheating		
12. Accelerate or run at high speed	Engine knocks	• Worn piston and cylinder • Wrong type of fuel • Excessive carbon build-up in combustion chamber • Ignition timing too advance (Faulty ECM)
Engine does not knock		

POOR PERFORMANCE AT LOW AND IDLE SPEED

		Possible cause
1. Check for leaking throttle body insulator	Leaking	• Loose throttle body insulator bands • Damaged throttle body insulator
No leak		
2. Perform spark test	Weak or intermittent spark	• Faulty spark plug • Fouled spark plug • Loose or disconnected ignition system wires • Broken or shorted spark plug wire • Faulty ignition pulse generator • Faulty ignition coil • Faulty engine stop switch • Faulty engine control module (ECM) • Faulty converter unit • Faulty ignition switch
Good spark		
3. Check ignition timing	Incorrect	• Faulty engine control module (ECM) • Faulty ignition pulse generator
Correct		
4. Check the fuel injection system	Abnormal	• Faulty fuel injection system (Section 5)

POOR PERFORMANCE AT HIGH SPEED

		Possible cause
1. Check ignition timing	Incorrect	• Faulty engine control module (ECM) • Faulty ignition pulse generator
Correct ↓		
2. Check the fuel injection system	Abnormal	• Faulty fuel injection system (section 5)
Normal ↓		
3. Check valve timing	Incorrect	• Camshafts not installed properly
Correct ↓		
4. Check valve spring	Weak	• Faulty valve spring
Not weak ↓		

POOR HANDLING

	Possible cause
1. If steering is heavy	• Steering bearing adjustment nut too tight • Damaged steering head bearings
2. If either wheel is wobbling	• Excessive wheel bearing play • Bent rim • Improperly installed wheel hub • Excessively worn swingarm pivot bearings • Bent frame
3. If motorcycle pulls to one side	• Front and rear wheels not aligned • Bent fork • Bent swingarm • Bent axle • Bent frame