aprilia

1043 1

00/2002-03

RST mille

www.serviceaprilia.com

workshopmanual

8140542 USA

INTRODUCTION	0
GENERAL INFORMATION	1
SERVICE AND SETTING UP	2
ENGINE	3
FUEL SYSTEM	4
COOLING SYSTEM	5
ELECTRICAL SYSTEM	6
CHASSIS	7
TROUBLESHOOTING	8
ANALYTICAL INDEX	i

INTRODUCTION

TABLE OF CONTENTS

0.1 UPDATE RELEASE 00/2002-03 ..... 0-3-*00*
0.1.1 INFORMATION ON UPDATING THE MANUAL..... 0-3-*00*
0.1.2 UPDATED MANUAL GENERAL LIST.. 0-3-*00*

0.2 HOW TO CONSULT THE MANUAL .. 0-6-*00*

0.3 FOREWORD 0-7-*00*

0.4 REFERENCE SERVICE LITERATURE 0-7-*00*
0.4.1 ENGINE SERVICE MANUAL 0-7-*00*
0.4.2 SPARE PARTS CATALOGUES..... 0-7-*00*
0.4.3 SPECIAL TOOLS MANUALS 0-7-*00*
0.4.4 OPERATING AND MAINTENANCE MANUALS 0-7-*00*

0.5 ABBREVIATIONS/SYMBOLS/ ACRONYMS 0-8-*00*

0.1 UPDATE RELEASE 00/2002-03

Issue date of the first edition (Release 00) and subsequent Releases:

First edition (Release 00).....March 2002

0.1.1 INFORMATION ON UPDATING THE MANUAL

The manual must be updated every time a new "Release" is received.

Insert the pages of the latest Release into the manual, and eliminate the corresponding obsolete pages (even if belonging to a previous Release).

⚠ DANGER

Failure to update the manual and eliminate the obsolete pages makes it more difficult to consult the manual, and may lead to performing incorrect operations on the vehicle, with serious consequences for the safety of the vehicle and of persons and property.

The manual consists of #10 sections, for a total of #358 pages, as listed below.

NOTE For the nomenclature of a typical page of the manual (and, specifically, for a definition of the page number), see 0.2 (HOW TO CONSULT THE MANUAL).

0.1.2 UPDATED MANUAL GENERAL LIST

page #	Release	page #	Release	page #	Release	page #	Release
0-1 *-00*	00	1-12 *-00*	00	2-15 *-00*	00	2-56 *-00*	00
0-2 *-00*	00	1-13 *-00*	00	2-16 *-00*	00	2-57 *-00*	00
0-3 *-00*	00	1-14 *-00*	00	2-17 *-00*	00	2-58 *-00*	00
0-4 *-00*	00	1-15 *-00*	00	2-18 *-00*	00	2-59 *-00*	00
0-5 *-00*	00	1-16 *-00*	00	2-19 *-00*	00	2-60 *-00*	00
0-6 *-00*	00	1-17 *-00*	00	2-20 *-00*	00	2-61 *-00*	00
0-7 *-00*	00	1-18 *-00*	00	2-21 *-00*	00	2-62 *-00*	00
0-8 *-00*	00	1-19 *-00*	00	2-22 *-00*	00	2-63 *-00*	00
0-9 *-00*	00	1-20 *-00*	00	2-23 *-00*	00	2-64 *-00*	00
0-10 *-00*	00	1-21 *-00*	00	2-24 *-00*	00	2-65 *-00*	00
1-1 *-00*	00	1-22 *-00*	00	2-25 *-00*	00	2-66 *-00*	00
1-2 *-00*	00	1-23 *-00*	00	2-26 *-00*	00	2-67 *-00*	00
1-3 *-00*	00	1-24 *-00*	00	2-27 *-00*	00	2-68 *-00*	00
1-4 *-00*	00	1-25 *-00*	00	2-28 *-00*	00	3-1 *-00*	00
1-5 *-00*	00	1-26 *-00*	00	2-29 *-00*	00	3-2 *-00*	00
1-6 *-00*	00	1-27 *-00*	00	2-30 *-00*	00	3-3 *-00*	00
1-7 *-00*	00	1-28 *-00*	00	2-31 *-00*	00	3-4 *-00*	00
1-8 *-00*	00	1-29 *-00*	00	2-32 *-00*	00	3-5 *-00*	00
1-9 *-00*	00	1-30 *-00*	00	2-33 *-00*	00	3-6 *-00*	00
1-10 *-00*	00	1-31 *-00*	00	2-34 *-00*	00	3-7 *-00*	00
1-11 *-00*	00	1-32 *-00*	00	2-35 *-00*	00	3-8 *-00*	00
1-33 *-00*	00			2-36 *-00*	00		
1-34 *-00*	00			2-37 *-00*	00		
1-35 *-00*	00			2-38 *-00*	00		
1-36 *-00*	00			2-39 *-00*	00		
1-37 *-00*	00			2-40 *-00*	00		
1-38 *-00*	00			2-41 *-00*	00		
2-1 *-00*	00			2-42 *-00*	00		
2-2 *-00*	00			2-43 *-00*	00		
2-3 *-00*	00			2-44 *-00*	00		
2-4 *-00*	00			2-45 *-00*	00		
2-5 *-00*	00			2-46 *-00*	00		
2-6 *-00*	00			2-47 *-00*	00		
2-7 *-00*	00			2-48 *-00*	00		
2-8 *-00*	00			2-49 *-00*	00		
2-9 *-00*	00			2-50 *-00*	00		
2-10 *-00*	00			2-51 *-00*	00		
2-11 *-00*	00			2-52 *-00*	00		
2-12 *-00*	00			2-53 *-00*	00		
2-13 *-00*	00			2-54 *-00*	00		
2-14 *-00*	00			2-55 *-00*	00		

CONT'D ➤

CONT'D ➤

page #	Release	page #	Release	page #	Release	page #	Release
3-9 *-00*	00	5-9 *-00*	00	6-39 *-00*	00	7-27 *-00*	00
3-10 *-00*	00	5-10 *-00*	00	6-40 *-00*	00	7-28 *-00*	00
3-11 *-00*	00	6-1 *-00*	00	6-41 *-00*	00	7-29 *-00*	00
3-12 *-00*	00	6-2 *-00*	00	6-42 *-00*	00	7-30 *-00*	00
3-13 *-00*	00	6-3 *-00*	00	6-43 *-00*	00	7-31 *-00*	00
3-14 *-00*	00	6-4 *-00*	00	6-44 *-00*	00	7-32 *-00*	00
3-15 *-00*	00	6-5 *-00*	00	6-45 *-00*	00	7-33 *-00*	00
3-16 *-00*	00	6-6 *-00*	00	6-46 *-00*	00	7-34 *-00*	00
3-17 *-00*	00	6-7 *-00*	00	6-47 *-00*	00	7-35 *-00*	00
3-18 *-00*	00	6-8 *-00*	00	6-48 *-00*	00	7-36 *-00*	00
4-1 *-00*	00	6-9 *-00*	00	6-49 *-00*	00	7-37 *-00*	00
4-2 *-00*	00	6-10 *-00*	00	6-50 *-00*	00	7-38 *-00*	00
4-3 *-00*	00	6-11 *-00*	00	6-51 *-00*	00	7-39 *-00*	00
4-4 *-00*	00	6-12 *-00*	00	6-52 *-00*	00	7-40 *-00*	00
4-5 *-00*	00	6-13 *-00*	00	7-1 *-00*	00	7-41 *-00*	00
4-6 *-00*	00	6-14 *-00*	00	7-2 *-00*	00	7-42 *-00*	00
4-7 *-00*	00	6-15 *-00*	00	7-3 *-00*	00	7-43 *-00*	00
4-8 *-00*	00	6-16 *-00*	00	7-4 *-00*	00	7-44 *-00*	00
4-9 *-00*	00	6-17 *-00*	00	7-5 *-00*	00	7-45 *-00*	00
4-10 *-00*	00	6-18 *-00*	00	7-6 *-00*	00	7-46 *-00*	00
4-11 *-00*	00	6-19 *-00*	00	7-7 *-00*	00	7-47 *-00*	00
4-12 *-00*	00	6-20 *-00*	00	7-8 *-00*	00	7-48 *-00*	00
4-13 *-00*	00	6-21 *-00*	00	7-9 *-00*	00	7-49 *-00*	00
4-14 *-00*	00	6-22 *-00*	00	7-10 *-00*	00	7-50 *-00*	00
4-15 *-00*	00	6-23 *-00*	00	7-11 *-00*	00	7-51 *-00*	00
4-16 *-00*	00	6-24 *-00*	00	7-12 *-00*	00	7-52 *-00*	00
4-17 *-00*	00	6-25 *-00*	00	7-13 *-00*	00	7-53 *-00*	00
4-18 *-00*	00	6-26 *-00*	00	7-14 *-00*	00	7-54 *-00*	00
4-19 *-00*	00	6-27 *-00*	00	7-15 *-00*	00	7-55 *-00*	00
4-20 *-00*	00	6-28 *-00*	00	7-16 *-00*	00	7-56 *-00*	00
4-21 *-00*	00	6-29 *-00*	00	7-17 *-00*	00	7-57 *-00*	00
4-22 *-00*	00	6-30 *-00*	00	7-18 *-00*	00	7-58 *-00*	00
5-1 *-00*	00	6-31 *-00*	00	7-19 *-00*	00	7-59 *-00*	00
5-2 *-00*	00	6-32 *-00*	00	7-20 *-00*	00	7-60 *-00*	00
5-3 *-00*	00	6-33 *-00*	00	7-21 *-00*	00	7-61 *-00*	00
5-4 *-00*	00	6-34 *-00*	00	7-22 *-00*	00	7-62 *-00*	00
5-5 *-00*	00	6-35 *-00*	00	7-23 *-00*	00	7-63 *-00*	00
5-6 *-00*	00	6-36 *-00*	00	7-24 *-00*	00	7-64 *-00*	00
5-7 *-00*	00	6-37 *-00*	00	7-25 *-00*	00	7-65 *-00*	00
5-8 *-00*	00	6-38 *-00*	00	7-26 *-00*	00	7-66 *-00*	00

CONT'D ➤

page #	Release	page #	Release
7-67 *-00*	00	8-4 *-00*	00
7-68 *-00*	00	8-5 *-00*	00
7-69 *-00*	00	8-6 *-00*	00
7-70 *-00*	00	8-7 *-00*	00
7-71 *-00*	00	8-8 *-00*	00
7-72 *-00*	00	8-9 *-00*	00
7-73 *-00*	00	8-10 *-00*	00
7-74 *-00*	00	8-11 *-00*	00
7-75 *-00*	00	8-12 *-00*	00
7-76 *-00*	00	8-13 *-00*	00
7-77 *-00*	00	8-14 *-00*	00
7-78 *-00*	00	8-15 *-00*	00
7-79 *-00*	00	8-16 *-00*	00
7-80 *-00*	00	8-17 *-00*	00
7-81 *-00*	00	8-18 *-00*	00
7-82 *-00*	00	8-19 *-00*	00
7-83 *-00*	00	8-20 *-00*	00
7-84 *-00*	00	8-21 *-00*	00
7-85 *-00*	00	8-22 *-00*	00
7-86 *-00*	00	8-23 *-00*	00
7-87 *-00*	00	8-24 *-00*	00
7-88 *-00*	00	8-25 *-00*	00
7-89 *-00*	00	8-26 *-00*	00
7-90 *-00*	00	●-1 *-00*	00
7-91 *-00*	00	●-2 *-00*	00
7-92 *-00*	00	●-3 *-00*	00
7-93 *-00*	00	●-3 *-00*	00
7-94 *-00*	00	●-5 *-00*	00
7-95 *-00*	00	●-6 *-00*	00
7-96 *-00*	00	●-7 *-00*	00
7-97 *-00*	00	●-8 *-00*	00
7-98 *-00*	00	●-9 *-00*	00
7-99 *-00*	00	●-10 *-00*	00
7-100 *-00*	00		
7-101 *-00*	00		
7-102 *-00*	00		
7-103 *-00*	00		
7-104 *-00*	00		
8-1 *-00*	00		
8-2 *-00*	00		
8-3 *-00*	00		

0.2 HOW TO CONSULT THE MANUAL

1 — RST mille

2 — GENERAL INFORMATION

8 — 1.9 PLACING THE VEHICLE ON THE SUPPORT STANDS

9 — 1.9.1 PLACING THE VEHICLE ON THE FRONT SUPPORT STANDS OPT

10 —
- Place the vehicle on the central stand.
- At the same time, insert the two pins (1) of the stand (3) into the two holes (2) at the bottom of the front fork.
- Rest one foot at the front of the stand (3).
- Push the stand (3) all the way down.

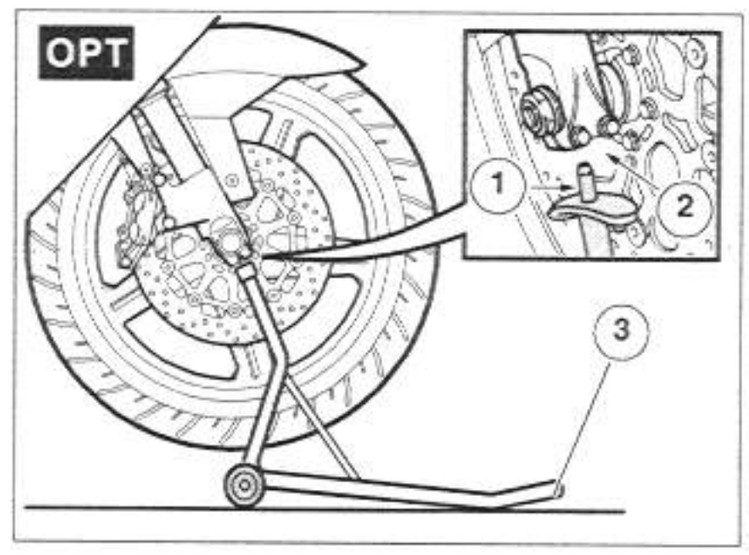

11 —

1.9.2 PLACING THE VEHICLE ON THE CENTER SUPPORT STAND OPT

Carefully read 0.5.1 (PRECAUTIONS AND GENERAL INFORMATION).

Code 8140176 (complete stand).

- Remove the lower fairing, see 7.1.33 (REMOVING THE LOWER FAIRING).
- Place the vehicle on the appropriate front support stand OPT, see 1.9.1 (PLACING THE VEHICLE ON THE FRONT SUPPORT STAND).
- ★ Hold the internal nut (1) steady in place.
- ★ Unscrew and remove the upper right rear engine fastening screw (2).

Tightening torque nut (1) / screw (2): 50 Nm (5.0 kgm).

IMPORTANT The screw (2) on the left side is longer.

- ★ Retrieve the nut (1).
- Insert the upper right support pin (3) in the upper hole on the right-hand side.
- Insert the stud bolt (4) in the upper hole on the left-hand side, and screw it all the way onto the pin (3).
- Screw the upper left support pin (5) all the way onto the stud bolt (4) and tighten.
- ★ Hold the internal nut (6) steady in place.
- ★ Unscrew and remove the lower engine fastening screw (7).

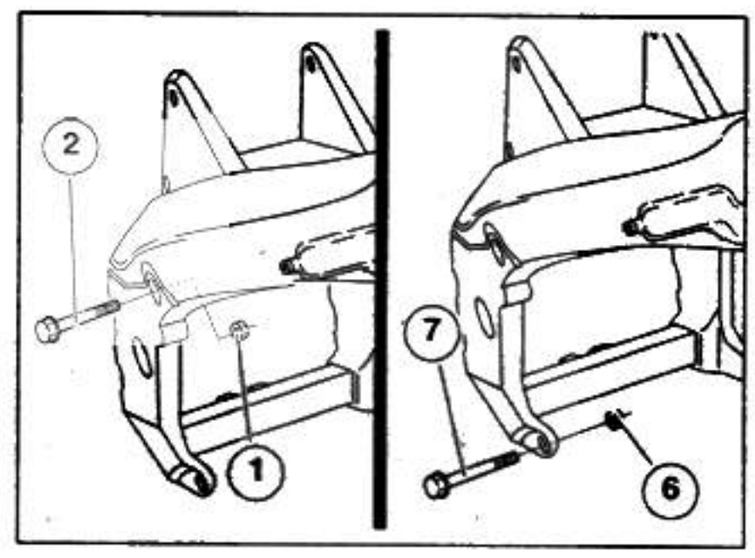

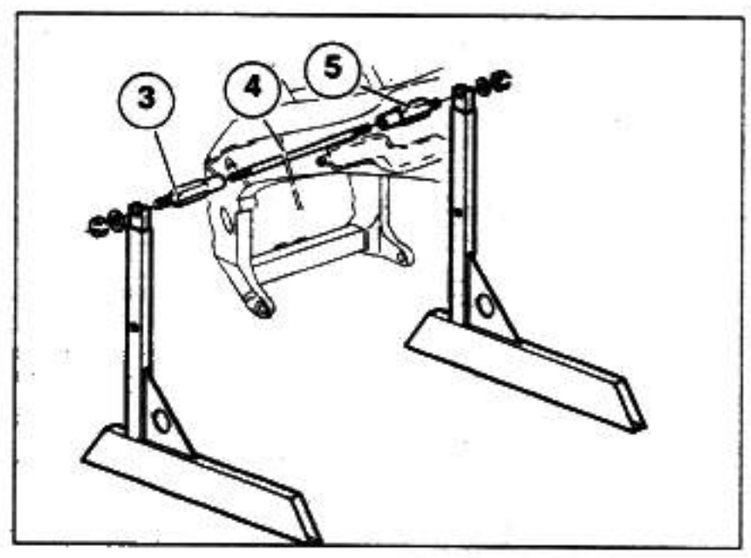

4 3 5 6 7

1) Vehicle (or engine) model
2) Section
3) Progressive release number ("00" refers to the first edition)
4) Year and month of Release publication
5) Section number
6) Section page number
7) Updated progressive page number
8) Chapter title (progressively numbered)
9) Paragraph title (progressively numbered)
10) Description of the operation (always preceded by a diamond)
11) Description of the operation: an asterisk means the operation must be repeated on the opposite side of the vehicle

0.3 FOREWORD

This manual contains information covering normal servicing procedures.
In the future, the information and illustrations contained in this manual will be updated by means of "Releases", see 0.1 (UPDATE RELEASE 00/2002-03).
Since **aprilia s.p.a.** strives to always improve the quality and usefulness of its vehicles, changes may be made to the vehicles at any time.
Thus, it is imperative that users of this manual understand that some information may be out of date for some vehicles.
Be sure that the information in this manual applies to the vehicle that you are servicing before you being any service operations.
Before consulting the manual, check the vehicle model.This publication is intended for **aprilia** dealers and their trained and qualified mechanics.
The description of many service and repair operations is intentionally omitted, as it is assumed that the users of this manual have basic mechanical training, basic knowledge of the procedures regarding motor vehicle repair, and have available to them all current information published by **aprilia** concerning the vehicle.
Without these things, the repair or servicing of the vehicle could be affected and could lead to a dangerous condition or accident for the servicing mechanic or the operator.
This manual does not describe all of the procedures necessary to repair and service the vehicle in detail.
Therefore, it is important to be particularly careful in order to avoid any damage to the vehicle, its parts, or to cause injury to the mechanic or the rider.
Changes in the technical specifications and servicing procedures that become necessary as a result of changes to **aprilia** vehicles will be documented and distribuited to all **aprilia** dealers.
Therefore, it is necessary that the latest **aprilia** information be kept available to the servicing mechanics.
If you have questions regarding repair and servicing procedures, contact the **aprilia** Consumer Service (A.C.S.). A.C.S. Technical counselors will be able to assist you with any problems that you might face.
aprilia s.p.a. reserves the right to modify any of its models in any manner at any time.

The mention of products or services supplied by entities other than **aprilia** is made for information purposes only. **aprilia** is not responsible for the performance or use of any product not specifically recommended or endorsed by **aprilia.**

For more information, see 0.4 (REFERENCE SERVICE LITERATURE)

NOTE Before starting any service on the engine, please read relevant reference manuals, see 0.4 (REFERENCE SERVICE LITERATURE).

First edition: March 2002

Produced and printed by:
Deca s.n.c.
via Risorgimento, 23/1 - 48022 Lugo (RA) - Italy
Phone +39 - 0545 35235
Fax +39 - 0545 32844
E-mail: deca@decagroup.it
www.decaweb.it

on behalf of:

Aprilia consumer service s.p.a.
via Noalese, 156 - 30036 Santa Maria di Sala (VE) - Italy
Phone +39 - 041 57 86 101
Fax +39 - 041 57 86 100
www.aprilia.com

0.4 REFERENCE SERVICE LITERATURE

0.4.1 ENGINE SERVICE MANUAL

aprilia part# (description)
8140582 (1051-1) I
8140584 (1053-1) F
8140585 (1054-1) D
8140583 (1052-1) E
8140586 (1055-1) UK
8140587 (1056-1) USA

0.4.2 SPARE PARTS CATALOGUES

aprilia part# (description)
390W I UK
390Y I UK
3901 I UK

0.4.3 SPECIAL TOOLS MANUALS

aprilia part# (description)
8202278 I F D E UK

0.4.4 OPERATING AND MAINTENANCE MANUALS

aprilia part# (description)
modelli 1998 -1999
8102623 I F D
8102857 P E UK
8102858 NL DK SF
8102859 GR J UK
8104128 AUS
8104099 USA
models 2000
8104089 I F D
8104142 P E UK
8104143 NL DK SF
8104141 GR J UK
8104164 AUS
8104171 USA
RSV01
8104152 I F D
8104269 P E UK
8104267 NL DK SF
8104268 GR J UK
8104270 AUS
8104264 USA

0.5 ABBREVIATIONS/SYMBOLS/ACRONYMS

#	= number
<	= less than
>	= greater than
≤	= equal to or less than
≥	= equal to or greater than
~	= approximately
∞	= infinity
°C	= degrees Celsius (centigrade)
°F	= degrees Fahrenheit
±	= plus or minus
a.c.	= alternating current
A	= ampere
Ah	= ampere per hour
API	= American Petroleum Institute
HV	= high voltage
AV/ DC	= Anti-Vibration Double Countershaft
bar	= unit of pressure (1 bar =14.50 psi -100 kPa)
BDC	= bottom dead center
cm^3	= cubic centimeters (1 cm^3 = 0.0338139 US fl oz)
CO	= carbon monoxide
CPU	= Central Processing Unit
cu in	= cubic inch
d.c.	= direct current
DIN	= German industrial standards (Deutsche Industrial Norm)
DOHC	= Double Overhead Camshaft
ECU	= Electronic Control Unit
ftlb	= foot pound
ft	= foot
g	= gram
rpm	= revolutions per minute
HC	= unburned hydrocarbons
HH	= hex head screw
HS	= hex socket-head screw
in	= inch
ISC	= Idle Speed Control
ISO	= International Standardization Organization
kg	= kilograms (1 kg = 2.2046224 lb)
kgm	= kilograms per meter (1 kgm =10 Nm)
km	= kilometers (1km = 0.62137119 mi)
km/h	= kilometers per hour
kΩ	= kiloohms
kPa	= kiloPascal (1 kPa = 0.145 psi - 0.01 bar)
KS	= clutch side (Kupplungseite)
kW	= kilowatts
ℓ	= liters (1 ℓ = 0.2641721 US gal)
LAP	= lap (for competitive riding)
LED	= Light Emitting Diode
m/s	= meters per second
max	= maximum
mbar	= millibar (1 mbar = 0.0145 psi - 0.1 kPa)
mi	= miles
MIN	= minimum
MPH	= miles per hour
MS	= flywheel side (Magnetoseite)
MΩ	= megaohm
N.A.	= Not Available
MON	= "Motor" method octane number
Nm	= Newton-meter (1 Nm =0.723300129 ftlb)
oz	= ounce
Ω	= ohm
PPC	= Pneumatic Power Clutch
RON	= "Research" method octane number
SAE	= Society of Automotive Engineers
sq in	= square inch
TDC	= top dead center
TEST	= diagnostic check
T.E.	= hexagonal head
T.P.	= flat head
TSI	= Twin Spark Ignition
US gal	= USA gallon
US qt	= USA quart
US fl oz	= USA fluid ounce
UPSIDE-DOWN	= upside-down forks
V	= Volt
W	= Watt
Ø	= diameter

NOTES

NOTE

GENERAL INFORMATION

1

GENERAL INFORMATION

TABLE OF CONTENTS

1.1 INTRODUCTION 1-3-00

1.2 SAFETY WARNINGS 1-3-00

1.3 GENERAL SAFETY RULES 1-4-00
1.3.1 CARBON MONOXIDE 1-4-00
1.3.2 GASOLINE 1-4-00
1.3.3 HOT COMPONENTS 1-4-00
1.3.4 USED ENGINE OIL AND FORK OIL 1-4-00
1.3.5 BRAKE FLUID 1-4-00
1.3.6 CLUTCH CONTROL FLUID 1-4-00
1.3.7 COOLANT 1-4-00
1.3.8 BATTERY HYDROGEN GAS AND ELECTROLYTE 1-4-00
1.3.9 PRECAUTIONS AND GENERAL INFORMATION 1-5-00
1.3.10 ELECTRICAL CONNECTORS 1-6-00
1.3.11 FASTENERS TIGHTENING TORQUES 1-6-00

1.4 SPECIFIC SAFETY RULES 1-7-00
1.4.1 FUEL 1-7-00
1.4.2 LUBRICANTS 1-8-00
1.4.3 BRAKE 1-8-00
1.4.4 DISC BRAKES 1-9-00
1.4.5 CLUTCH CONTROL FLUID 1-10-00
1.4.6 COOLANT 1-11-00
1.4.7 DRIVE CHAIN 1-12-00
1.4.8 TIRES 1-12-00
1.4.9 AUTOMATIC CONVERTER 1-13-00
1.4.10 CATALITIC CONVERTER 1-13-00
1.4.11 EXHAUST SILECER 1-13-00
1.4.12 SPARK ARRESTER 1-13-00

1.5 RUNNING-IN RULES 1-14-00

1.6 HOW TO USE YOUR SERVICE AND REPAIR MANUAL 1-15-00
1.6.1 HOW TO USE THIS MANUAL 1-15-00
1.6.2 REQUESTING SPARE PARTS 1-15-00

1.7 IDENTIFICATION DATA 1-16-00
1.7.1 VEHICLE IDENTIFICATION NUMBER (V.I.N.) (FRAME NUMBER) 1-16-00
1.7.2 INFORMATION CONTAINED IN THE VEHICLE IDENTIFICATION NUMBER 1-16-00

1.8 POSITION OF SERIAL NUMBERS . 1-17-00
1.8.1 FRAME NUMBER 1-17-00
1.8.2 ENGINE NUMBER 1-17-00
1.8.3 POSITION OF THE WARNING ADHESIVE LABELS 1-18-00

1.9 CALIFORNIA EVAPORATIVE EMISSION SYSTEM 1-20-00

1.10 SPARE PARTS 1-21-00

1.11 SPECIFICATIONS 1-21-00

1.12 LUBRICANT CHART 1-24-00

1.13 CONSUMABLES 1-25-00
1.13.1 PRODUCT PROPERTIES 1-25-00
1.13.2 USING CONSUMABLES 1-26-00

1.14 SPECIAL TOOLS 1-29-00
1.14.1 MISCELLANEOUS TOOLS 1-29-00
1.14.2 ENGINE TOOLS 1-30-00

1.15 PLACING THE VEHICLE ON THE SUPPORT STANDS 1-31-00
1.15.1 PLACING THE VEHICLE ON THE FRONT SUPPORT STAND 1-31-00
1.15.2 PLACING THE VEHICLE ON THE CENTER SUPPORT STAND 1-32-00

1.16 INSTRUCTIONS FOR APPLYING THE TRANSFERS 1-33-00

1.17 FASTENERS 1-35-00
1.17.1 JOINTS WITH CLICK CLAMPS AND WITH SCREW-TYPE CLAMPS 1-35-00
1.17.2 GENERAL VALUES OF TIGHTENING TORQUES 1-36-00

1.1 INTRODUCTION

This manual is divided into sections, chapters and paragraphs, by subject.
The procedures described are laid out in single operation, and each operation is indicated by a ◆.
The numbered parts shown in the figures are identified in the text with the number in parentheses or with the symbol representing them.
Example (the following text is generic and does not refer to this specific vehicle):

section →

MAIN INDEPENDENT CONTROLS

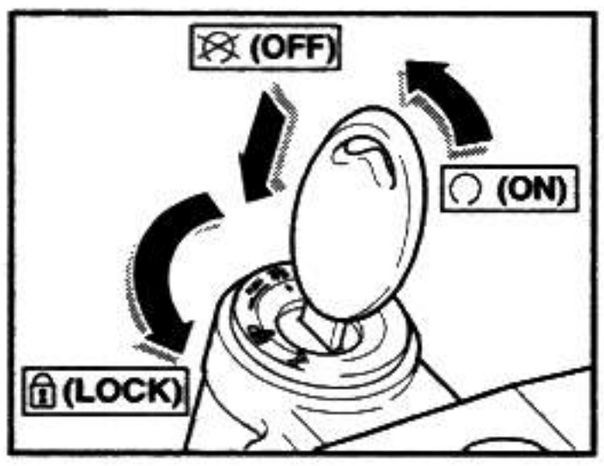

chapter →

1.20 STEERING LOCK

safety warning →

⚠ WARNING

Never attempt to place the ignition switch in the locked "🔒" (LOCK) position while the vehicle is moving.

paragraph →

1.1.1 OPERATION

To lock the steering:

operation →

- Turn the handlebar completely to the left or to the right.

position (2) →

- Turn the key (2) to position "⊗" (OFF).

symbol "🔒" →

- Press the key and rotate to position "🔒" (LOCK).
- Remove the key.

1.2 SAFETY WARNINGS

Throughout this manual you will encounter the following symbols:

⚠ DANGER

When you find this symbol on the vehicle or in the manual, this indicates that a potential for serious personal injury or death exists.
Failure to follow this warning may result in serious risk of personal injury or death, of the mechanic working on the vehicle, the operator of the vehicle, or the general public.
It also indicates thet serious and permanent damage to the vehicle is possible.

⚠ WARNING

This statement indicates a potential hazard which may result in some personal injury, or damage to the vehicle.

NOTE The term "NOTE" in the present manual calls your attention to important information or instructions.

1.3 GENERAL SAFETY RULES

1.3.1 CARBON MONOXIDE

If it is necessary to run the engine in order to carry out a maintenance operation, ensure that the area in wich you are operating is properly ventilated.
Never run the engine in enclosed spaces.
If it is necessary to work indoors, use an exhaust evacuation system.

⚠ DANGER

The exhaust fumes contain carbon monoxide, a poisonous gas that can cause loss of consciousness and even death.

1.3.2 GASOLINE

Work in a well ventilated area.
Keep cigarettes, flames or sparks away from the work area and from the place where gasoline is stored.

⚠ DANGER

Gasoline is extremely flammable and becomes explosive under certain conditions.

KEEP GASOLINE AWAY FROM CHILDREN.

1.3.3 HOT COMPONENTS

⚠ DANGER

The engine and the components of the exhaust system become very hot and remain hot for some time after the engine has been stopped.
Before handling these components, wear insulating gloves or wait until the engine and the exhaust system have cooled down.

1.3.4 USED ENGINE OIL AND FORK OIL

⚠ DANGER

Use latex gloves for the maintenance operations that require contact with used oil.
Used oil may cause skin cancer if repeatedly left in contact with the skin for prolonged periods.
Although this is unlikely unless you handle used oil on a daily basis, it is advisable to thoroughly wash your hands with soap and water after handling used oil.

KEEP OIL AWAY FROM CHILDREN.

1.3.5 BRAKE FLUID

⚠ WARNING

The brake fluid can damage painted, plastic or rubber parts. When performing maintenance operations on the brake system, place a clean shop towel on these parts.

Always wear goggles when servicing the brake system with brake fluid.
Brake fluid is extremely destructive to your eyes.
If you should accidentally get brake fluid in your eyes, flush immediately with a large quantity of cool clear water and seek professional medical assistance immediately.

KEEP BRAKE FLUID AWAY FROM CHILDREN.

1.3.6 CLUTCH CONTROL FLUID

⚠ WARNING

The clutch control fluid can damage painted, plastic or rubber parts.

When performing mainatenace operations on the clutch control system, place a clean shop towel on these parts.

Always wear goggles when servicing the clutch control system with clutch control fluid.
Clutch control fluid is extremely destructive to your eyes.
If you should accidentally get clutch control fluid in your eyes, flush immediately with a large quantity of cool clear water and seek professional medical assistance immediately.

KEEP CLUTCH CONTROL FLUID AWAY FROM CHILDREN.

1.3.7 COOLANT

In certain conditions, the ethylene glycol contained in the engine coolant is flammable: its flame is invisible, but you can be burned anyway.

⚠ DANGER

Avoid spilling the engine coolant on the exhaust system or on the engine conponents.
They may be hot enough to cause the coolant to ignite and burn whithout a visible flame.
The coolant (ethylene glycol) can cause skin irritation and is poisonous if swallowed.

Engine coolant is sweet tasting, and therefore extremely attractive to pets and other animals, as well as being extremely toxic.
Do not leave coolant in an open container where animals may be able to drink it.

KEEP COOLANT AWAY FROM CHILDREN.

Do not remove the radiator the cap when the engine is hot.
The coolant is under pressure and may cause burns.

1.3.8 BATTERY HYDROGEN GAS AND ELECTROLYTE

⚠ DANGER

The battery gives off explosive gases; keep cigarettes, flames and sparks away from the battery.
Provide adequate ventilation when operating or recharging the battery.

The battery contains sulphuric acid (electrolyte).
Contact with the skin or the eyes may cause serious burns.

Always wear tight fitting goggles and protective clothing when handling battery eloctrolyte.
It is particularly important for you to protect your eyes, since even a minuscule amount of battery acid can destroy your vision.
Should you accidentally get even the smallest amount of battery acid on your skin or eyes, immediately flush with large quantities of clear cool water and immediately seek professional medical attention.

The electroliyte is poisonous. If the electrolyte is accidentally swallowed, drink large quantities of water or milk and then milk of magnesia or vegetable oil.
Seek professional medical attentiion immediately.

KEEP BATTERIES AND ELECTROLYTE AWAY FROM CHILDREN.

1.3.9 PRECAUTIONS AND GENERAL INFORMATION

Please scrupulously follow the recommendations below when repairing, disassembling and reassembling the vehicle.

⚠ DANGER

Do not use open flames at any time.
Before beginning any maintenance work or inspecting the vehicle, stop the engine and remove the ignition key. Wait for the engine and exhaust system to cool completely. If possible, use the appropriate equipment to raise the vehicle, on a solid, level floor.

Be especially careful around any parts of the engine and exhaust system that may still be warm, to avoid burns.

The brakes also get quite hot in operation.
Be sure that the brakes have cooled thoroughly before beginning any service operations.

No part of the vehicle is safe to hold in your mouth.

Unless explicitly stated otherwise, reassemble all units by carrying out the disassembly operations in reverse.
Use common sense to interpret any overlap in cross-referenced instructions, to avoid unnecessarily removing components. Do not use abrasive pastes to polish matte paints.

Handle fuel with the greatest caution.

Never use fuel as a solvent for cleaning the vehicle.

Use only water and neutral soap to clean all rubber and plastic parts and the saddle. Never use alcohol, gasoline or other solvents.

Disconnect the negative battery cable (–) before soldering.

When two or more people are working together, make sure conditions are safe for each.

Be sure that all the mechanics working on any vehicle are thoroughly briefed as what each will be doing, and make sure that one mechanic is responsible for ensuring that all safety related items, such as tightening torques, are properly considered.

Carefully read paragraph 1.4 (SPECIFIC SAFETY RULES).

BEFORE DISMANTLING THE COMPONENTS

- Remove all dirt, mud, dust and foreign matter from the vehicle before dismantling its components.
- Where designated, use the special tools designed for this vehicle.

⚠ DANGER

Do not use makeshift tools for any operation which calls for a special tool.
Faillure to heed this warning can lead to serious personal injury such as when an ill-fitting wrench slips, and you slam your hand into the workbench or a part of the vehicle.

DISMANTLING THE COMPONENTS

- Do not loosen and/or tighten the screws and nuts using pliers or other tools; always use the appropriate wrench.
- Before disconnecting any line, cable, etc., mark each part with a number or distinguishing mark.
- Each disconnected part must be marked clearly to ensure that it may be reassembled in the same position from which it was taken.
- Clean and wash all dismantled components thoroughly, using non-flammable solvents.
- Keep coupled parts together, since they have "adapted" to each other through normal wear and tear.
- Some components must be used together or replaced completely.
- Keep away from sources of heat.

REASSEMBLING THE COMPONENTS

⚠ WARNING

Never reuse a circlip; when on is removed, it must be replaced with a new on.
When mounting a new circlip, be careful not to spread its ends farther than strictly necessary to place it on the shaft.
After mounting a circlip, make sure that is completely and firmly inserted in its seat.

Do not use compressed air to clean any bearing.

NOTE Bearings must rotate freely, without roughness or noise, otherwise they must be replaced.

- Use only ORIGINAL **aprilia** SPARE PARTS.
- Use only the recommended lubricants and consumables.
- Lubricate the parts (whenever possible) before reassembling them.
- When tightening screws and nuts, start with the largest or innermost once, and cross-tighten.
- Tighten gradually in a series of steps before applying the final torque.
- Always replace lock nuts, gaskets, seals, circlips, O-rings, cotter pins and screws with new ones if the threads are damaged.
- Clean all joining surfaces, oil seal edges and gaskets before reassembling. Apply a light coating of lithium-based grease to the edges of the oil seals. Reassemble oil seals and bearings with the brand name or serial number facing outwards (visible side).
- Copiously lubricate bearings before installation and assembly.
- Make sure that all components have been correctly installed and assembled.
- After any repair or periodic maintenance operation is carried out, the vehicle must be test ridden in an area away from traffic and other hazards.

1.3.10 ELECTRICAL CONNECTORS

The electrical connectors must be disconnected as follows. Failure to follow these procedures will irreparably damage the connector and wiring.

- Press in the click tab.

⚠ WARNING

Do not pull the cables to disconnect the two connectors.

- Grasp the two connectors and disconnect them by pulling in opposite directions.
- If dirt, rust, dust, or moisture is seen on the connector, blow out the connector with air.
- Ensure that the cables are correctly crimped to the terminals placed inside the connectors.

NOTE The two halves of the connector fit toghether properly in only one orientation. Ensure that the connector is properly aligned before attempting to assemble it.

- Press the connectors firmly together, listening for the typical "click" sound for those connectors provided with a click tab. Ensure that both halves of the connectors are firmly pressed together.

1.3.11 FASTENERS TIGHTENING TORQUES

⚠ DANGER

Remember that the tightening torque of all fasteners on the wheels, brakes, axles, and other components of the suspension system is very important to ensure the safety of the vehicle, and must be kept at the prescribed values.
Check the tightening torque of the fasteners regularly, and always use a torque wrench when reinstalling them.
Failure to comply with this warning could allow one of these components to be lost which could allow one of these components to be lost which could lock a wheel or cause other handling problems with consequent overturning and risk of serious injury or even death.

1.4 SPECIFIC SAFETY RULES

1.4.1 FUEL

⚠ DANGER

Gasoline is extremely flammable and in some conditions can become explosive.
It is therefore necessary to refuel and carry out maintenance operations involving the fuel system in a well-ventilated area, with the engine off.
Do not refuel or do any maintenance on the fuel system with the engine running.
Do not smoke while refueling or near fuel vapors.
Never allow any portion of the fuel system to come in contact with open flames, sparks or other heat sources.

Be careful to avoid spilling fuel when you are refueling. Spilled fuel could ignite when it contacts hot engine or exhaust system surfaces.

If you accidentally spill some fuel, ensure that it is wiped up or completely evaporated before starting the vehicle.

Since gasoline expands in the fuel tank when the vehicle is sitting in the open sun, never fill the tank completely to the brim. Leave at least one inch of expansion space.

Avoid any contact of the fuel with your skin, and avoid inhalation of fuel vapors.

Do not ever attempt to siphon fuel from one container to another using your mouth as suction for a siphon hose.

Gasoline is poisonous and carcinogenic and contains chemical substances that cause birth defects and other reproductive problems. If gasoline should be accidentally spilled on the skin or clothes, immediately wash it off with soap and water and change clothes.

Should you accidentally spill gasoline in your eyes, flush with a large quantity of water and immediately contact a health professional.

Should you accidentally get gasoline into your mouth, do not induce vomiting.

Drink a large quantity of milk or clear water and immediately contact a health professional.

Never try to siphon gasoline by sucking it with your mouth.

Use a manual pump or a similar system.

If your vehicle overturns, it will leak gasoline which is extremely flammable.

Flames or sparks may ignite this which will not only destroy the vehicle but also could do serious property damage to surrounding property and cause serious injuries or even death.

ALWAYS KEEP GASOLINE AWAY FROM CHILDREN.

DISPOSE OF UNWANTED GASOLINE PROPERLY, DO NOT DUMP IT INTO STORM SEWERS OR INTO A SINK OR TOILET.

⚠ WARNING

Before opening the fuel filler cap, if necessary, clean the cap and the part around it with a clean cloth. Prevent any foreign material from getting into the fuel tank, this could lead to serious engine damage.

If you use any container or funnel for refueling, make sure that it is perfectly clean. Any foreign matter getting into the fuel tank may lead to severe damage.

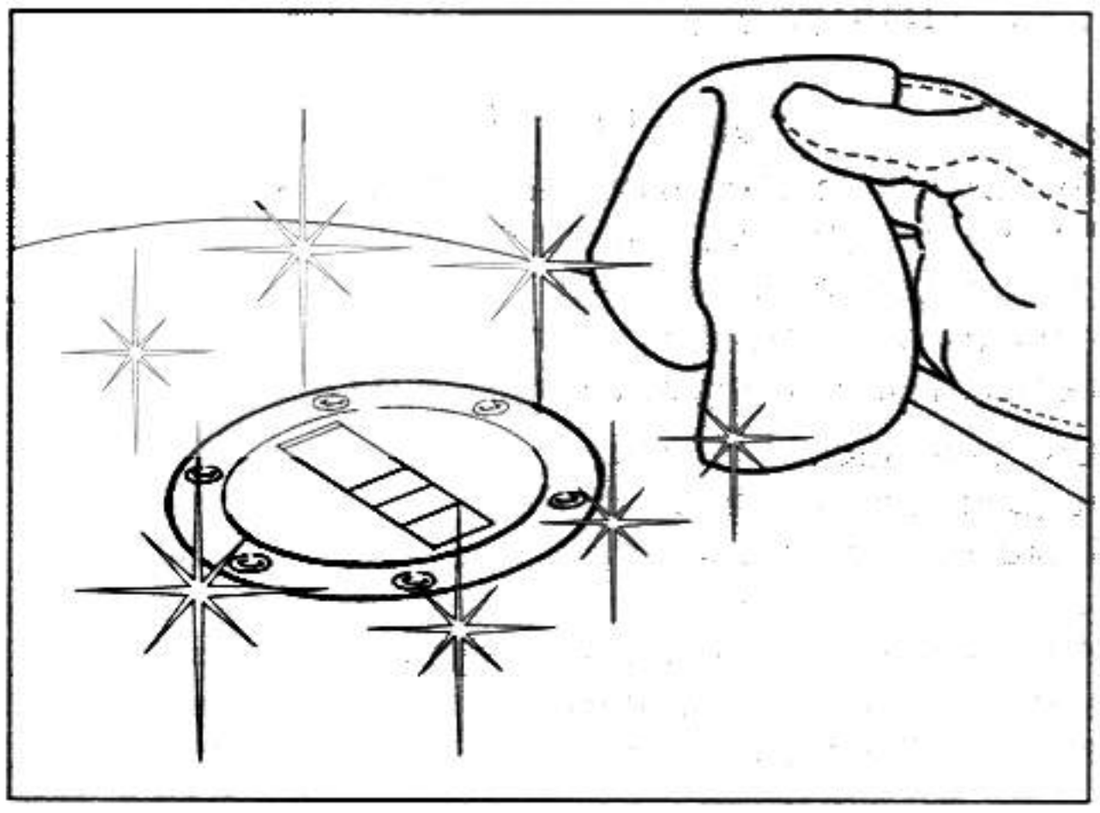

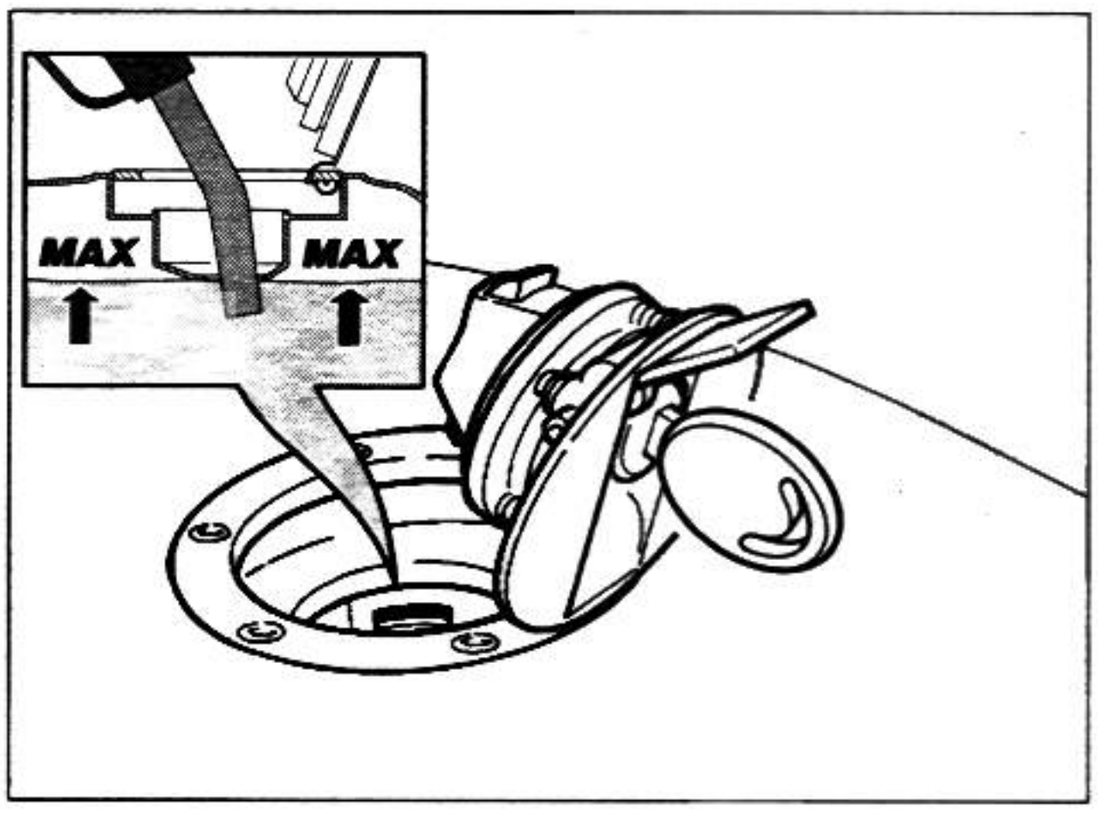

⚠ DANGER

Do not add any additives or other substances to the gasoline.

Do not refuel the tank completely; the fuel should never be touching the rim of filler cap seat hole.

After refueling, replace the fuel filler cap (1) in the correct position and ensure that it is properly closed.

Use only unleaded gasoline with a minimum octane rating of 92 (M+R)/2 .

FUEL TANK CAPACITY
(reserve included): 5.28 US gal (20l).

TANK RESERVE: 1.19 ± 0.26 us GAL (4.5 ± 1l).

1.4.2 LUBRICANTS

⚠ DANGER

Proper vehicle lubrication is critical to safe operation. Failure to maintain proper lubricant levels or to use the proper type of clean, new lubricant, can lead to an engine or transmission seizure with subsequent accident, serious injury or death.

Use latex gloves for the maintenance operations that require contact with used oil.
Used oil may cause skin cancer if repeatedly left in contact with the skin for prolonged periods.
Although this is unlikely unless you handle used oil on a daily basis, it is advisable to thoroughly wash your hands with soap and water after handling used oil.

KEEP OIL AWAY FROM CHILDREN.

DISPOSE OF OIL PROPERLY.

⚠ WARNING

Be very careful when putting oil in your vehicle not to spill it.
Clean up any oil spilled immediately because oil can damage the finish of your vehicle.
Also, oil on the tires creates an extremely slippery and therefore dangerous situation.

In case of lubricant leakage do not ride the vehicle, but check to determine the cause of the leakage and repair it.

ENGINE OIL

⚠ DANGER

If the engine oil pressure warning light LED " 🛢 " (1) remains on (when the engine is running), or if it comes on during the normal running of the engine, this means that the oil system is not developing sufficient pressure.

In this case, immediately stop the engine and check the engine oil level, see 2.13 (CHANGING THE ENGINE OIL AND OIL FILTER) if the level is correct, check the engine oil pressure sensor, see 6.10.3 (ENGINE OIL PRESSURE SENSOR).

Failure to heed this warning can lead to engine seizure, upset, and serious injury or even death.

⚠ WARNING

Perform these maintenance operations at one-half of the specified intervals, if the vehicle is often used in rainy or very dusty conditions, on unpaved roads or in any kind of competition.

Periodically check the engine oil level, see 2.12 (CHECKING AND TOPPING UP THE ENGINE OIL LEVEL).
Renew the engine oil after the first 600 mi (1,000 Km), and thereafter every 4,600 mi (7,500 km) (*), see 2.13 (CHANGING THE ENGINE OIL AND OIL FILTER).

(*) = For competition use, renew every 2,300 mi (3,750 km).

NOTE Use high-quality 15W-50 oil, see 1.12 (LUBRICANT CHART).

As an alternative to the recommended oil, it is possible to use high-quality oils with characteristics in compliance with or superior to the CCMC G-4, A.P.I. SG. specifications.

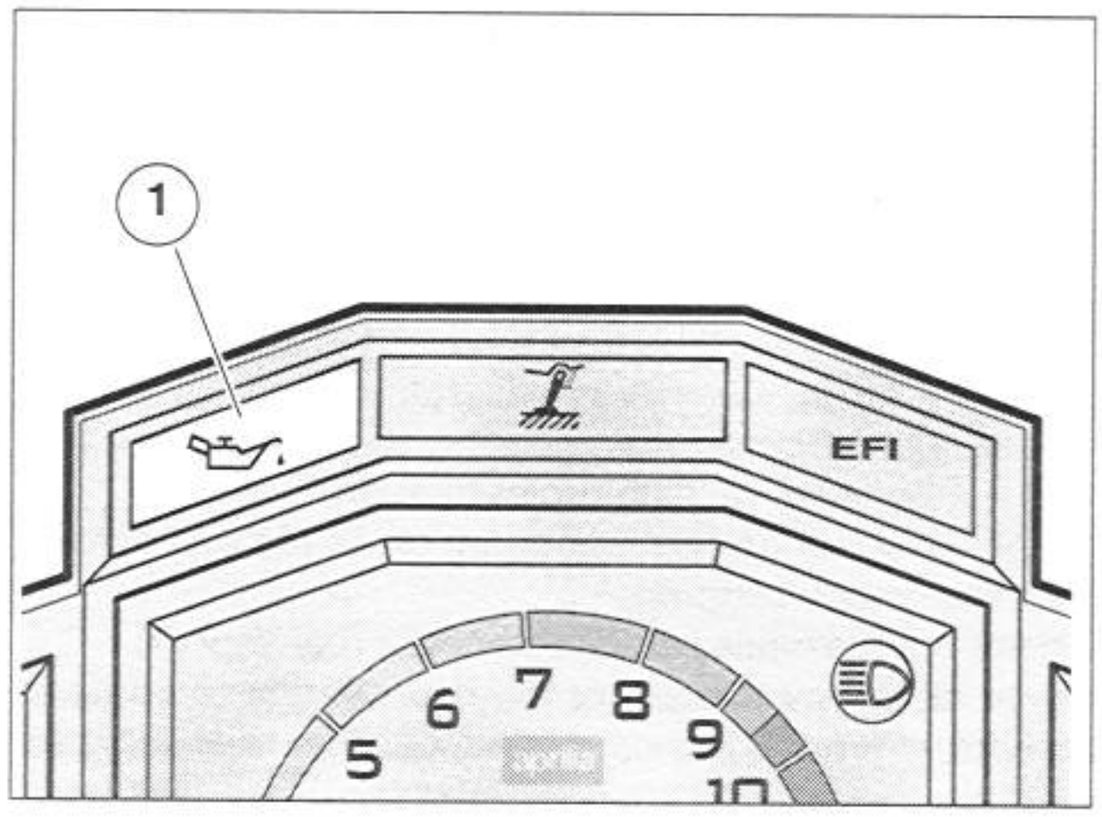

FORK OIL

⚠ DANGER

Changing the damper settings and/or the viscosity of the damper oil changes suspension response and could upset vehicle handling. Always follow the recommendations in this manual for suspension adjustments.

The standard fork oil viscosity is SAE 20W.

Oil as light as SAE 5W may be used if a soft fork stiffness is desired, and you may mix 5W with 20W in varying proportions to obtain a desired different fork stiffness.

Ensure that exactly the same mixture is used in each fork.

One of the properties of F.A. or Agip FORK is that their viscosity changes very little with variations in temperature, and their damping response remains fairly constant.

1.4.3 BRAKE

NOTE This vehicle è equipped with front and rear disc brakes, with separate hydraulic circuits.

The following information refers to a single brake system, but is applicable to both.

⚠ DANGER

Do not ride the vehicle with worn or malfunctioning brakes! The brakes are the most important safety system of the vehicle, and using the vehicle with brakes that are anything less than perfect is very likely to lead to a collision or upset, with consequent risk of serious injury or death.

Wet condition seriusly degrade the performance of your brakes.

When the road is wet from rain, you should plan to use double the normal stopping distances since both the brakes themselves and the traction of the tires on the road are reduced by the presence of water.
Water on the brakes from washing your vehicle, or splashed up from wet roads, or crossing puddles or ditches, can wet the brakes sufficiently to greatly reduce their effectiveness.

Failure to heed these warnings may lead to a serious accident with consequent risk of serious injury or even death.

The brakes are extremely important for your safety. Do not use the vehicle if the brakes do not work perfectly.

Always check the brake efficiency before riding. Sudden variations in clearance or an elastic resistance in the brake levers may be due to trouble in the hydraulic systems.

Pay special attention to the brake disc and friction material, making sure that they are neither dirty nor oily, especially after maintenance operations or inspections.

Check the brake line, ensure that it is not twisted or kinked, nor leaking.

KEEP BRAKE FLUID AWAY FROM CHILDREN.

DISPOSE OF USED BRAKE FLUID PROPERLY. SEE THE GENERAL WARNINGS AT 1.3.5 (BRAKE FLUID).

1.4.4 DISC BRAKES

⚠ DANGER

The brakes are the most important safety system on your vehicle.
For your safety, they must be in perfect repair, so they should be checked every time you ride the vehicle.

Oil or other fluid on a disc will contaminate the brake pads.

Dirty pads must be discarded and replaced, a dirty or oily disc must be cleaned with a high quality degreaser.

⚠ DANGER

Perform these maintenance operations at one-half of the specified intervals, if the vehicle is often used in rainy or very dusty conditions, on unpaved roads or in any kind of competition.

Check the levels of the brake fluid in the reservoirs after the first 600 mi (1,000 km) and thereafter every 4,600 mi (7,500 km); see 2.16 (CHECKING AND TOPPING UP THE FRONT BRAKE FLUID) and 2.17 (CHECKING AND TOPPING UP THE REAR BRAKE FLUID); renew the brake fluid every two years, see 2.21 (CHANGING THE FRONT BRAKE FLUID) and 2.22 (CHANGING THE REAR BRAKE FLUID).

NOTE Use high-quality brake fluid, see 1.11 (Lubricant chart).

Check the brake pad wear, as shown on 2.27 (CHECKING THE BRAKE PAD WEAR).

When the pads wear out the brake fluid level in the reservoir decreases to automatically compensate for their wear.
The front brake fluid reservoir (1) is located on the right end of the handlebar near the front brake lever.
The rear brake fluid reservoir (2) is under the fairing on the right side of the vehicle.

⚠ DANGER

Never use the vehicle if any portion of either brake system is leaking.

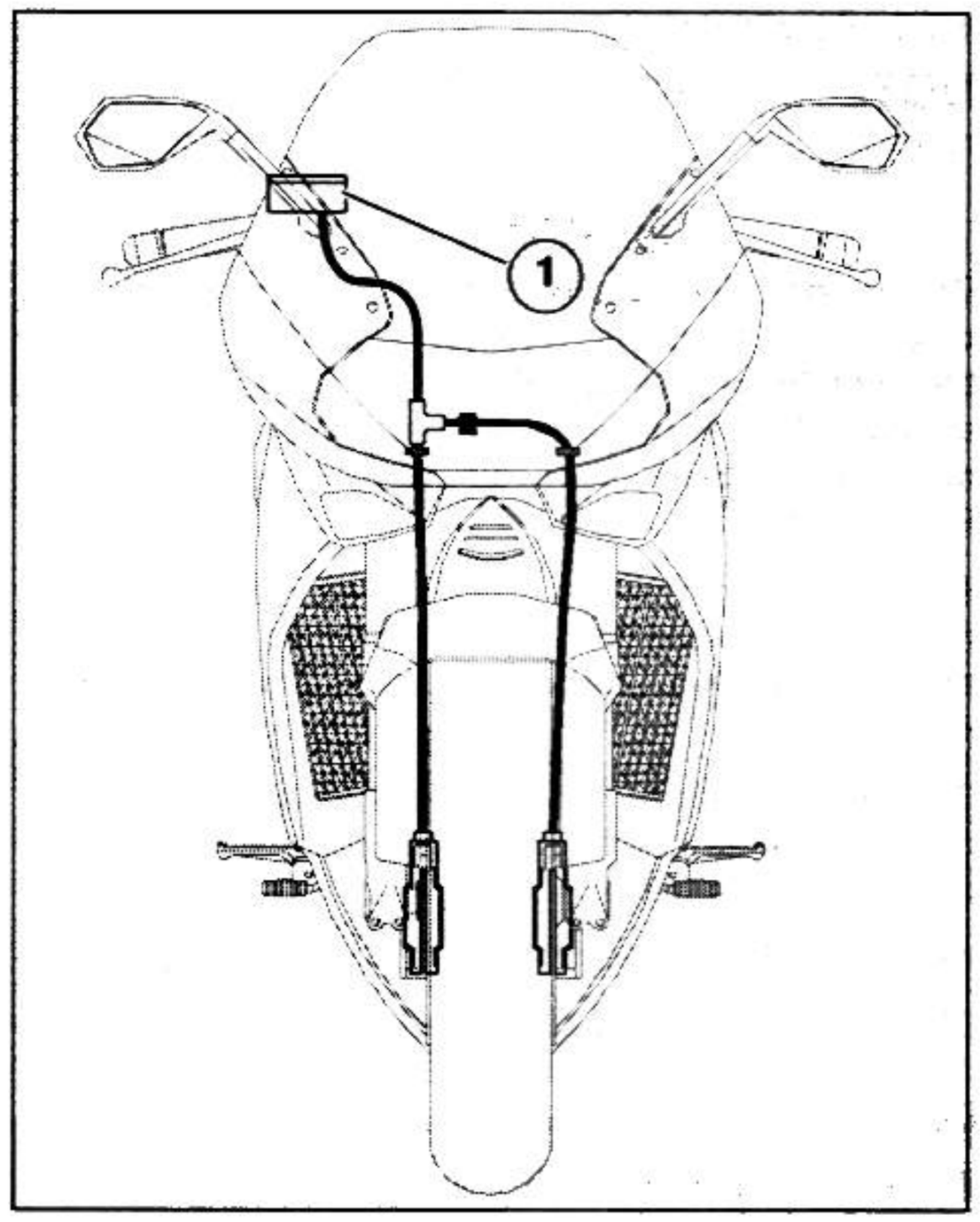

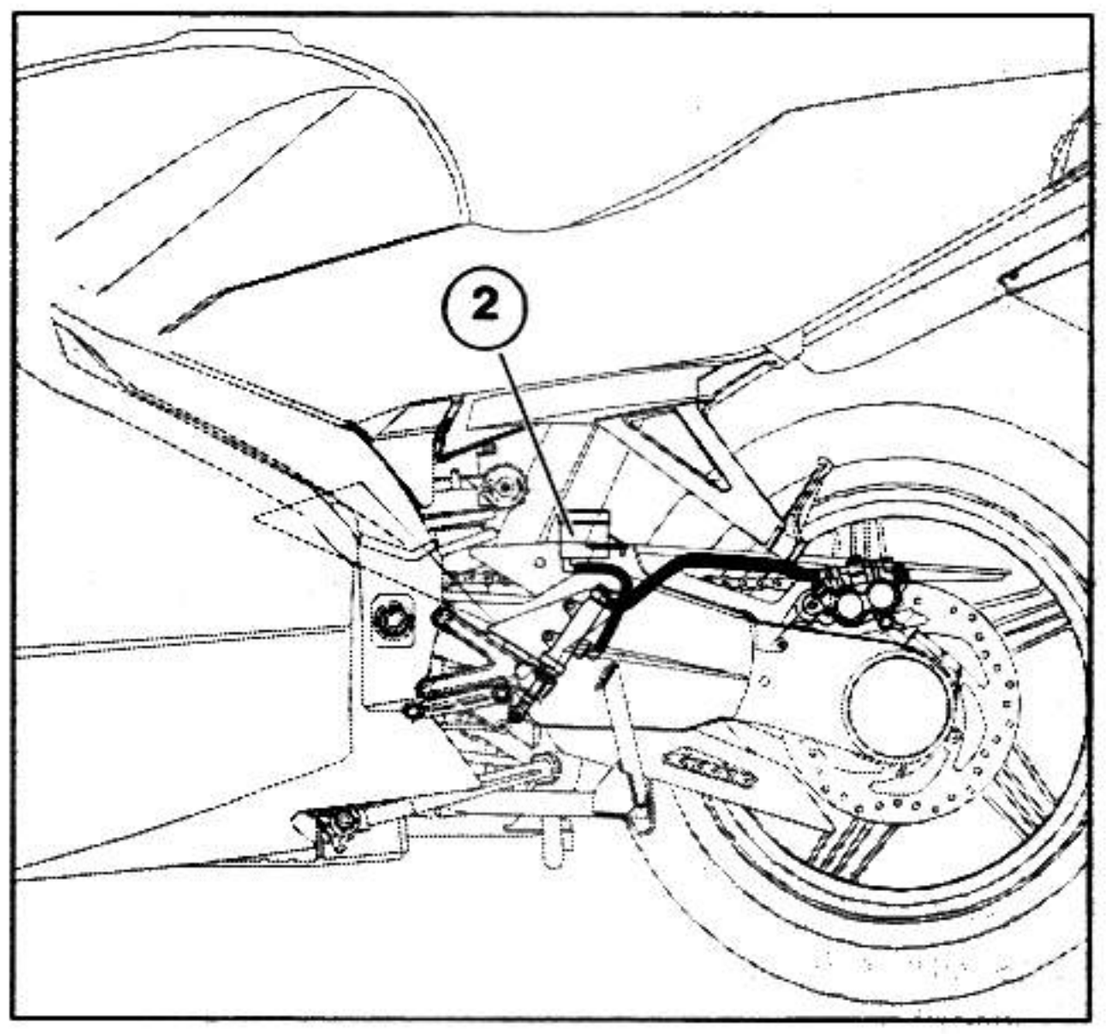

1.4.5 CLUTCH CONTROL FLUID

NOTE This vehicle is equipped with hydraulic clutch control.

⚠ DANGER

Do not ride the vehicle with worn or malfuctioning clutch! The clutch is an important safety system of the vehicle, and using the vehicle with clutch that is anything less than perfect is very likely to lead to a collision or upset, with consequent risk of serious injury or death.

The clutch is extremely important for your safety. Do not use the vehicle if the clutch does not work perfectly. Always check the clutch efficiency before riding.

Sudden variations in clearance or an elastic resistance in the clutch lever may be due to trouble in the hydraulic system.

KEEP CLUTCH FLUID AWAY FROM CHILDREN.

DISPOSE OF USED CLUTCH FLUID PROPERLY. SEE THE GENERAL WARNINGS AT 1.3.6 (CLUTCH CONTROL FLUID)

When using the fluid, take care not to spill it on the plastic and painted parts, since it damages them.

Perform these maintenance operations at one-half of the specified intervals, if the vehicle is often used in rainy or very dusty conditions, on unpaved roads, or in any kind of competition.

Check the levels of the clutch fluid in the reservoir after the first 600 mi (1,000 km), and thereafter every 4,650 mi (7,500 km) [for competition use: thereafter every 2,300 mi (3,750 km)], see 2.18 (CHECKING AND TOPPING UP THE CLUTCH FLUID).

Renew the fluid every two years, see 2.23 (CHANGING THE CLUTCH FLUID).

Never use the vehicle if the clutch hydraulic system is leaking.

⚠ WARNING

To avoid serious damage to the system, do not use fluids other than the recommended ones nor mix differents fluids for topping up.
Do not use clutch fluid taken from old or already opened containers.

Check that the clutch control lines are not twisted or worn.
Ensured that neither water nor dust accidentally enter the system.

In case maintenance operations are to be performed on the hydraulic system, it is advisable to use latex gloves.

NOTE Use high-quality clutch control fluid, see 1.12 (LUBRICANT CHART)

The clutch control fluid reservoir (1) is located on the left end of the handlebar near the clutch lever.

NOTE The hydraulic clutch is installed in conjunction with PPC (pneumatic power clutch), an exclusive patented system which avoids rear wheel hop.

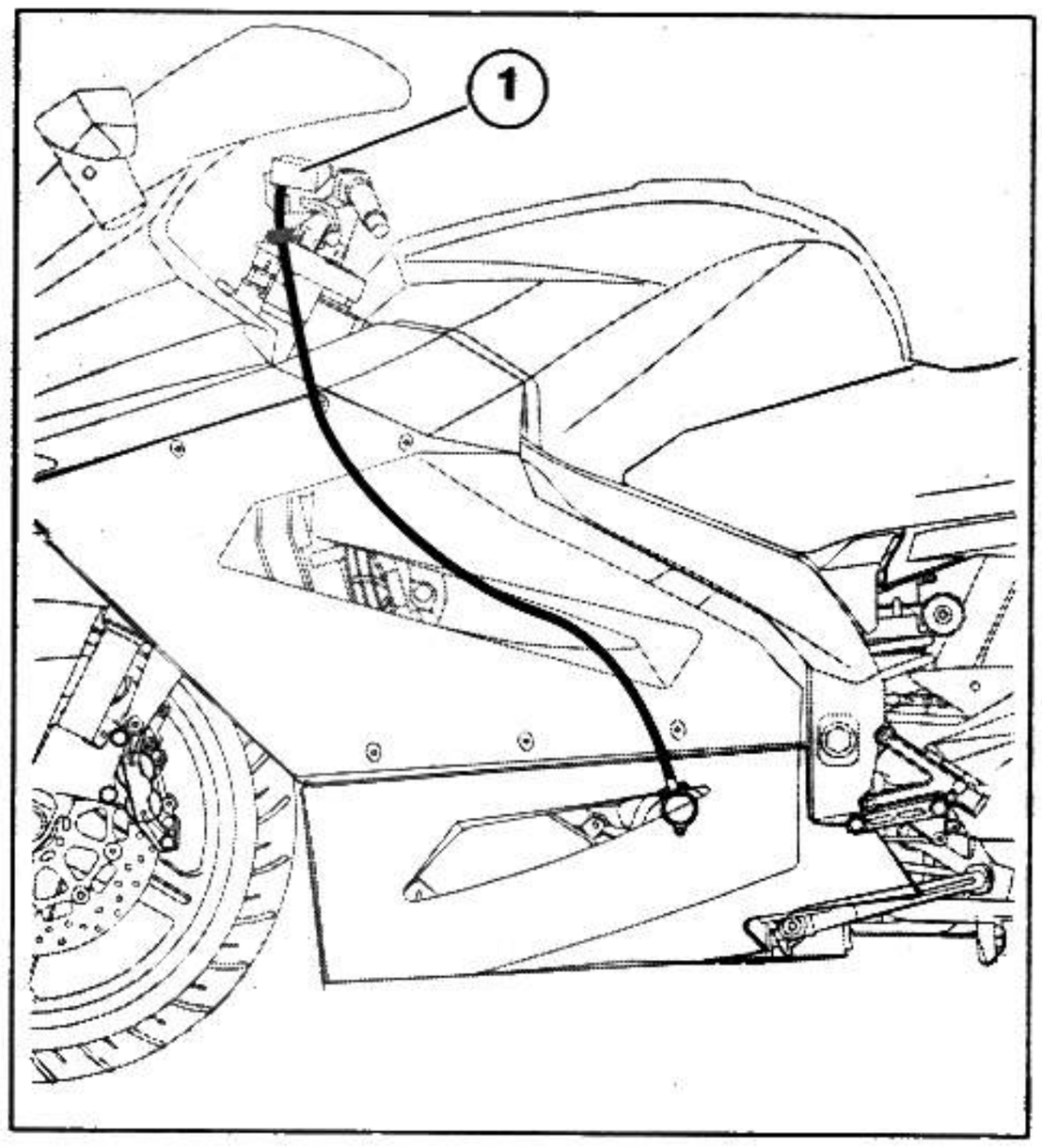

1.4.6 COOLANT

⚠ WARNING

Do not use the vehicle if the coolant is below the minimum prescribed level.

Before setting off, and every 9,300 mi (15,000 km), check the level of the coolant, see 2.14 (CHECKING AND TOPPING UP THE COOLANT); renew the coolant every two years, see 2.15 (CHANGING THE COOLANT).

⚠ DANGER

Coolant is poisonous! Do not ingest coolant under any circumstance.
Should you get coolant in your mouth, rinse with cool water and immediately seek medical attention.
Coolant is also very dangerous to your skin and eyes.
Should you accidentally get coolant on your clothing or skin, change clothes immediately.
Wash coolant from your skin with hot water and soap.
Should you get coolant in your eyes, flush with plenty of cool water and seek professional medical help at once.
Should someone swallow coolant accidentally, induce vomiting, rinse mouth with water, and immediately seek professional medical attention.

DISPOSE OF THE COOLANT PROPERLY.

BE SURE TO KEEP THE DRAINED COOLANT AWAY FROM CHILDREN AND PETS.
IT IS SWEET TASTING, AS WELL AS EXTREMELY POISONOUS, AND IS VERY ATTRACTIVE TO CHILDREN AND PETS.

Use extra caution not to spill the coolant on any hot parts of the engine. It is flammable, and can emit invisible, noxious fumes.

Always wear rubber or latex gloves when servicing the cooling system.

It is advisable to maintain 50% water/50% antifreeze year round. This way, losses due to evaporation are reduced, and topping up the radiator need not be done very frequently. Thus, the mineral salt deposits left in the radiator by evaporation are reduced, and the cooling efficiency of the system uncompromised. If the outdoor temperature is below 0°C (32°F), check the antifreeze concentration in the coolant. Below 0°, increase the antifreeze concentration to 60%.

⚠ WARNING

Use only distilled water topping off the cooling system. This will reduce damage to the engine.

⚠ DANGER

The coolant is very hot.

Do not remove the filler cap (1) when the engine is hot since the coolant is under pressure and it will splash out violently.

If it gets in contact with the skin or with your clothing, it may cause severe burns.

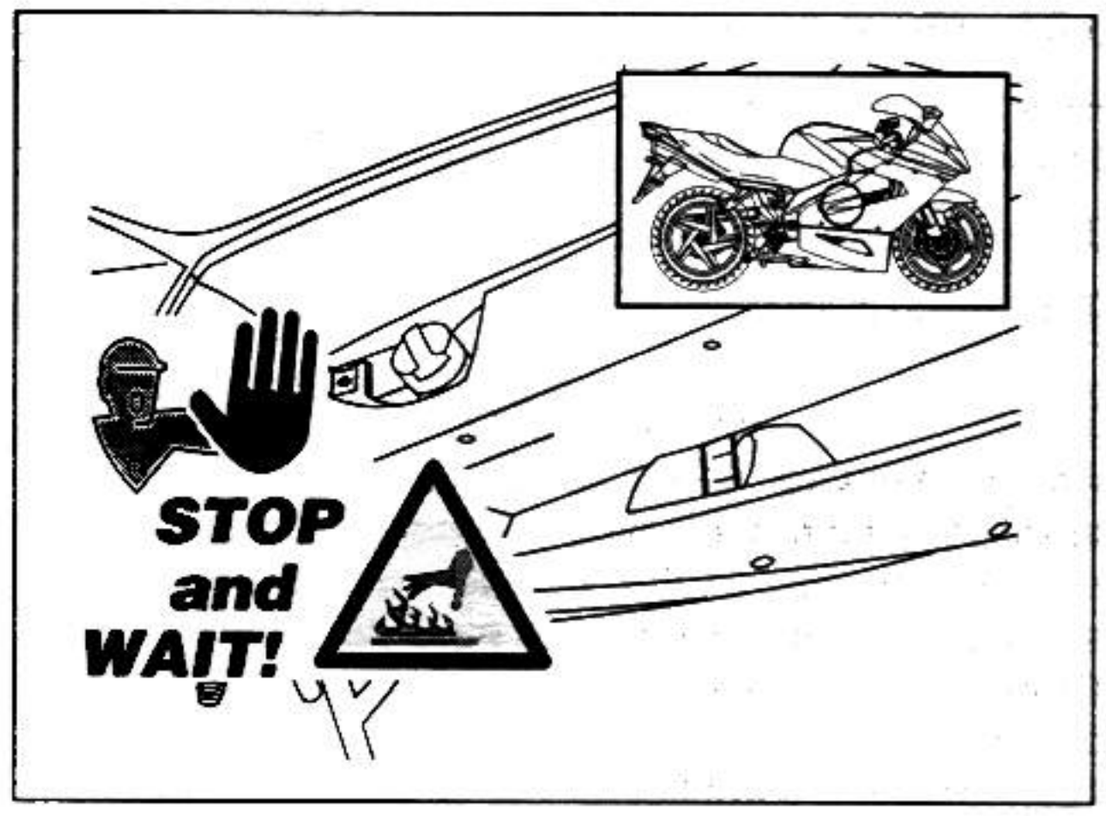

⚠ DANGER

Be aware of the risk of burns from the coolant.
Check the coolant level and top up the expansion tank only after the engine has thoroughly cooled.

Do not use your fingers or any object to check if there is enough coolant.

On the basis of the desired freezing temperature of the coolant mixture, add to the water the percentage of coolant indicated in the following table:

Freezing point °C (°F)	Coolant of the volume %
-20 (-4)	35
-30 (-22)	45
-40 (-40)	55

NOTE The characteristics of the various antifreeze liquids are different.

Be sure to read the label on the product to learn the degree of protection it guarantees.

⚠ WARNING

Use only a high quality antifreeze, specifically intended for use with aluminum and magnesium engines, which contains no nitrite.

1.4.7 DRIVE CHAIN

Every 600 mi (1,000 km) check the condition, the wear, the play (tension) and the lubrication of the drive chain.

The vehicle is equipped with an endless chain.

There is no master link used.

⚠ DANGER

An excessively loose chain can come off the sprocket which can result in a serious accident and serious damage to the vehicle from the upset and subsequent serious injury or even death.
Do not ride the vehicle with an improperly adjusted chain.
To inspect the condition of the chain, grasp the chain where it goes around the sprocket and try to pull it away from the sprocket.

If you can move it more than one-eighth of an inch away from the sprocket, the chain is worn out and the chain and both front and rear sprockets must be replaced.

⚠ WARNING

Lack of maintenance can cause premature wear of the chain and damage to the sprockets.

Maintain your chain more often if your vehicle is used on dusty or muddy roads.

1.4.8 TIRES

⚠ DANGER

If the tire is inflated to too high a pressure, an uncomfortably harsh ride will result, and riding confort will be compromised.
Also, road holding, especially during turns and in wet condition, will likewise be compromised.

If the tire is underinflated (pressure is too low), the tire may slip on the rim with consequent loss of control.

Again road holding and handling characteristics will be degraded, and brake performance will be reduced.

Insure that all tires are equipped with properly installed valve caps.

Changing, repairing, maintenance and balancing operations are very important and should be carried out by qualified technicians with appropriate tools.

If the tires are new, they may still be covered with a slippery film: ride carefully for the first few miles.
Never attempt to treat a tire with any kind of rubber dressing.

Particulary avoid contact to the tire with any gasoline fluid as this will cause rapid deterioration of the rubber.

If a tires become contaminated with oil or gasoline, you cannot clean it.

The tire must be replaced.

⚠ DANGER

Some of the original equipment tires for this vehicle are provided with wear indicators.
There are several kinds of wear indicators.
Contact your dealer to get the necessary information on the wear check procedures.
Visually check the tire wear and if they are worn, have them replaced.

If a tire should go flat while you are riding the vehicle do not attempt to continue riding.
Avoid abrupt breaking and steering inputs, and avoid shutting the trottle quikly.

Slowly decrease the throttle setting, moving to the side of the road, using engine compression to slow you to a stop.

Non-compliance with these instructions may cause accidents with consequent risk of injuries or even death.

Do not install tires with an inner tube on rims for tubeless tires, and viceversa.

1.4.9 AUTOMATIC CONVERTER

This vehicle is equipped with lights that come on automatically as soon as the ignition switch (1) is turned to position "○" (ON) (low beam lights "≡D" or high beam lights "≡D") position "P≡" (PARKING) (only parking lights "≡D ◁≡").
For this reason, there is no light switch on your vehicle.The light can be switched off only by turning the ignition switch (1) to position "⊗" (OFF).
Before starting the vehicle, ensure that the dimmer switch (2) is in the low beam light "≡D" position.

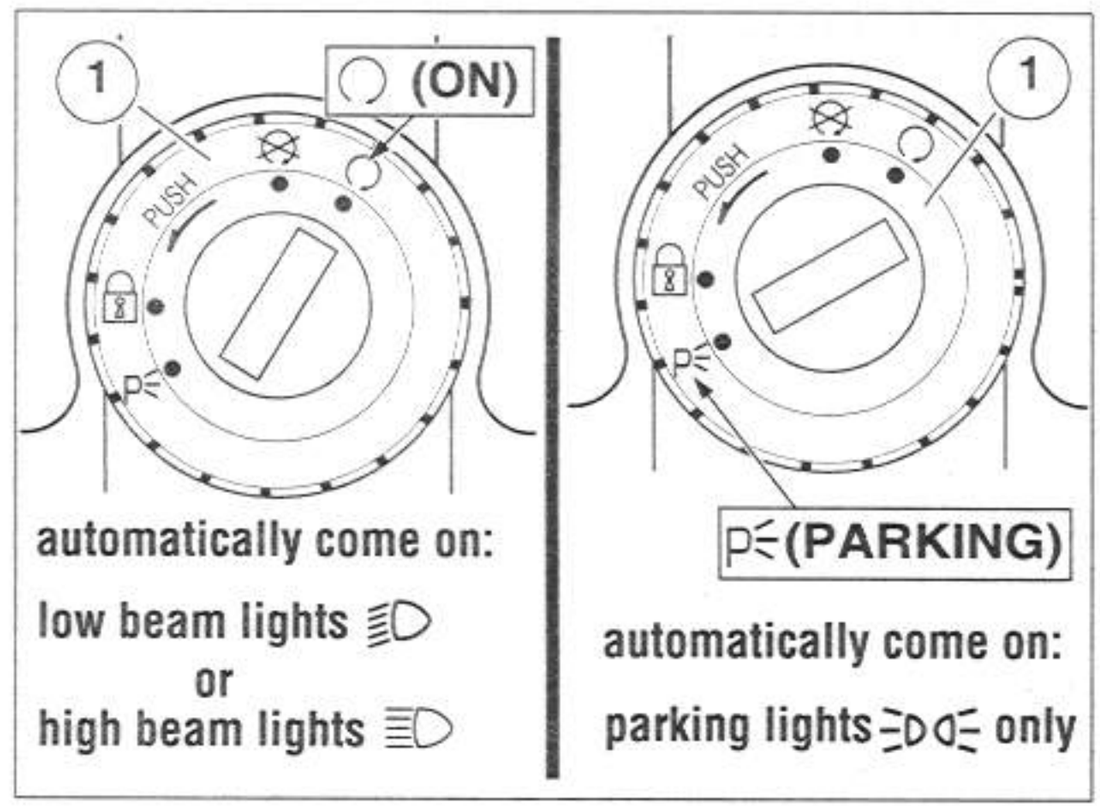

1.4.10 CATALITIC CONVERTER

⚠ DANGER

The exhaust system of this vehicle is equipped with a catalytic converter.

It becomes extremely hot, and cause serious burns and forest fires.

Do not touch it! Keep flammable materials away.

If your vehicle is equipped with catalytic converter, do not park near dry brush, wood, or in places easily accessible to children, as the catalytic converter becomes extremely hot during use.

Be careful to avoid any kind of contact before it has completely cooled down.

The catalytic converter, if used, is a metal "platinum-rhodium bivalent" type.
This device provides for the oxidation of the CO (carbonmonoxide) and of the HC (unburned hydrocarbons) contained in the exhaust gases, changing them into carbon dioxide and steam, respectively.

⚠ WARNING

Do not use leaded gasoline, since it causes the destruction of the catalytic converter.

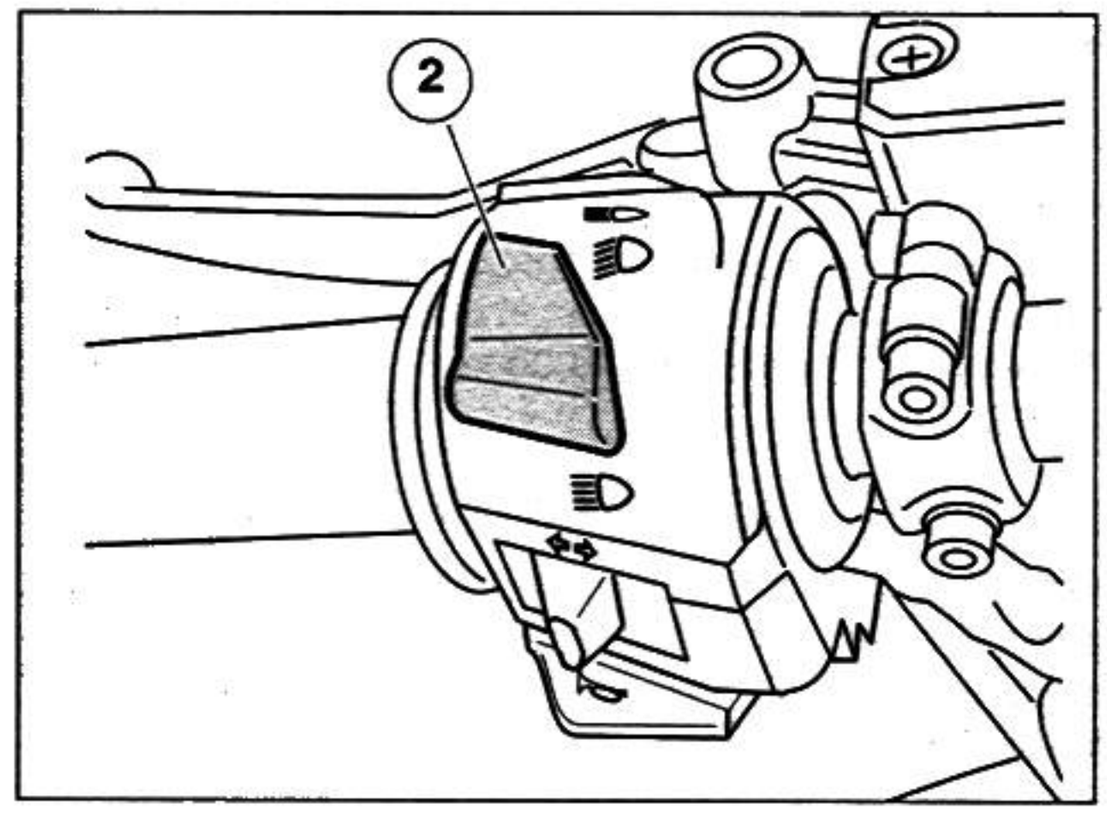

1.4.11 EXHAUST SILECER

⚠ DANGER

Tampering with the exhaust system is prohibited.

It is against the law for you to alter the exhaust system in a manner that increases the noise, carefully read 1.3.9 (PRECAUTIONS AND GENERAL INFORMATION)

Periodically inspect the entire exhaust system, including the exhaust pipe and silencer, to ensure that no holes have rusted through.
Using a wire or a small pick, ensure that the drain hole in the bottom of the muffler is open.
If the noise of your vehicle has increased significantly, replace the defective exhaust system components.
Tampering with the exhaust system not only makes your vehicle loud, it will reduce its performance and shorten its life.

1.4.12 SPARK ARRESTER

⚠ DANGER

If the bike is to be used off-road, on public land, it is the owner's responsibility to install a spark arrester approved by the Us Forest Service for this engine displacement or lager.

1.5 RUNNING-IN RULES

The internal parts of the engine and trasmission must be properly run-in to ensure their long life and dependable operation.
If possible, while breaking in your vehicle, ride on hilly roads and/or roads with many curves so that the engine and transmission undergo lots of speed changes.
It is also important that, during the run-in period, the suspension and brakes be treated gently to allow the mating parts to bed.
Therefore, avoid hard braking, high speeds or very bumpy roads during the break in period.

NOTE Only after the first 900 mi (1,500 km) of running-in you can expect the best performance from the vehicle.

During break in, obey the following rules:

- Do not open the throttle abruptly or fully at low engine speed. This rule applies even after break in has been completed.
- During the first 60 mi (100 km), apply the brakes with caution, avoid sudden and prolonged braking.
  This ensure correct bedding in of the pads on the discs.
- During the first 600 mi (1,000 km), never exceed 6,000 rpm.

⚠ DANGER

After the vehicle has been operated for 600 mi (1,000 km) perform the "checking operations" shown in column "After running-in" of the 2.1 (SCHEDULED MAINTENANCE PLAN)

Rectify any faults found. Failure to heed this warning could lead to damage to your vehicle or engine seizure or other malfunction which could cause an up-set and lead to serious injury or even death.

- Between the first 600 mi (1,000 km) and 900 mi (1,500 km) ride more briskly, changing speed and using maximum acceleration for only a few seconds. Never exceed 7,500 rpm.
- After the first 900 mi (1,500 km) if you have followed the above break in schedule, the engine should be fully broken in, and will deliver maximum performance. However, never exceed the maximum allowed rpm (10,500 rpm).

Engine maximum rpm for the running-in	
Mileage mi (km)	Max. rpm
0 - 600 (0 - 1,000)	6,000
600 - 900 (1,000 - 1,500)	7,500
over 900 (1,500)	10,500

1.6 HOW TO USE YOUR SERVICE AND REPAIR MANUAL

1.6.1 HOW TO USE THIS MANUAL

This manual is divided into sections, chapters and paragraphs, each one of which corresponds to a category of main components.
To consult them, see TABLE OF CONTENTS.
If not expressly indicated otherwise, for the reassembly of the units repart the disassembly operations in reverse order.
The terms "right" and "left" are referred to the rider seated on the vehicle in the normal riding position.
For normal maintenence operations and for the use of the vehicle, consult the "USE AND MAINTENANCE" manual.

★ The operations preceded by this symbol must be repeated on the opposite side of the vehicle.

1.6.2 REQUESTING SPARE PARTS

NOTE When asking your Dealer for spare parts, specify the spare parts code indicated on the SPARE PARTS IDENTIFICATION LABEL.
Write down the identification code in the space here below, in order to remember it in also case of loss or deterioration of the label.

The label is placed under the saddle, see to be able to read it, remove the saddle see 7.1.1 on the right part of the frame.

aprilia

SPARE PARTS IDENTIFICATION

YEAR	*Y*	*1*	*2*	*3*	*4*
I.M.	*A*	*B*	*C*	*D*	*E*

I	*UK*	*A*	*P*	*SF*	*B*	*D*	*F*	*E*	*GR*
NL	*CH*	*DK*	*J*	*SGP*	*SLO*	*IL*	*ROK*	*MAL*	*RCH*
HR	*AUS*	*USA*	*BR*	*RSA*	*NZ*	*CDN*			

In this manual the various versions are indicated by the following symbols:

version with catalytic converter

ASD **Automatic Switch-on Device version**

EES **evaporative emission system**

OPT **optional**

VERSION:

I Italy	GR Greece	Mal Malaysia
UK United Kingdom	NL Netherlands	RCH Chile
A Austria	CH Switzerland	HR Croatia
P Portugal	DK Denmark	AUS Australia
SF Finland	J Japan	USA United States of America
B Belgium	SGP Singapore	BR Brazil
D Germany	SLO Slovenia	RSA Republic of the South Africa
F France	IL Israel	NZ New Zealand
E Spain	ROK South Korea	CDN Canada

1.7 IDENTIFICATION DATA

Please supply the frame number when you purchase spare parts.

NOTE Do not obliterate or alter the identification numbers under any circumstance.

This is illegal in all countries.

In addition, alteration of the identification numbers invalidates the warranty.

1.7.1 VEHICLE IDENTIFICATION NUMBER (V.I.N.) (FRAME NUMBER)

Every vehicle produced by **aprilia** receives a vehicle identification number (V.I.N.) stamped:
- on the steering head of the frame (A), as shown above;

and also:
- on the identification plate (B) which is located on the front portion near the steering head of the frame.

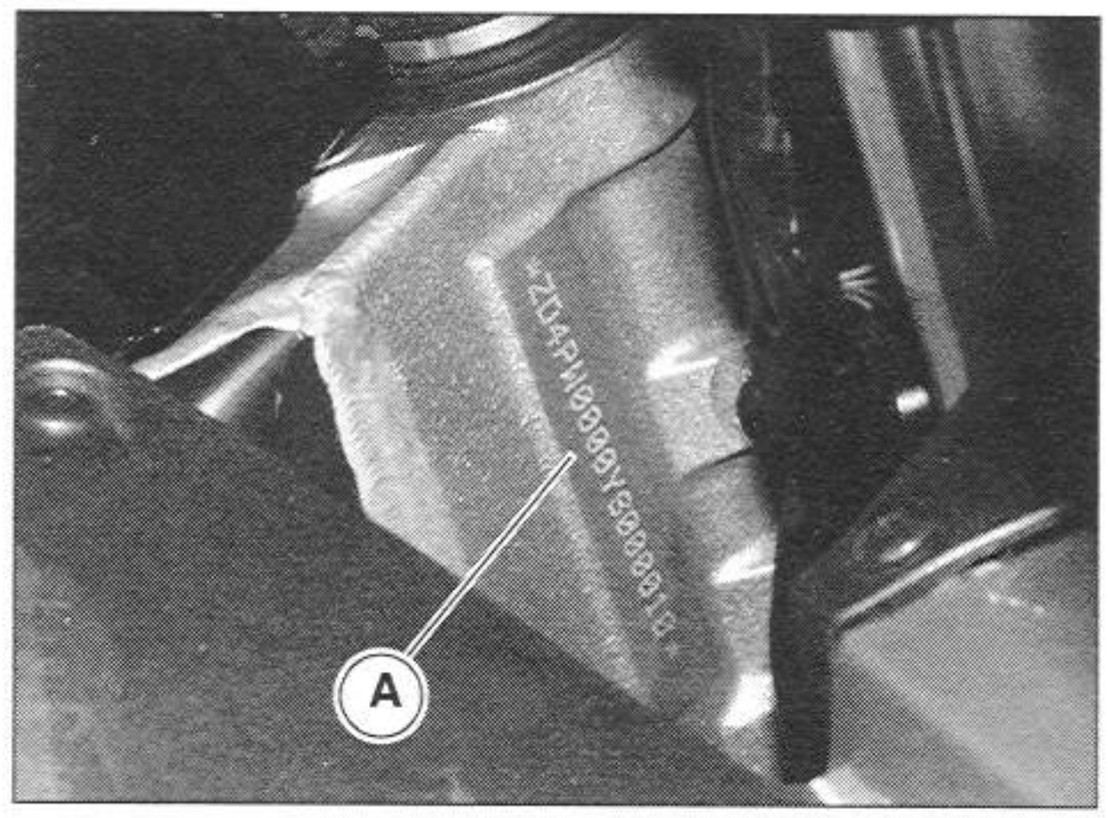

1.7.2 INFORMATION CONTAINED IN THE VEHICLE IDENTIFICATION NUMBER

Description of the vehicle identification number (V.I.N.), stamped on the steering head of the frame (A) and on the identification plate (B).

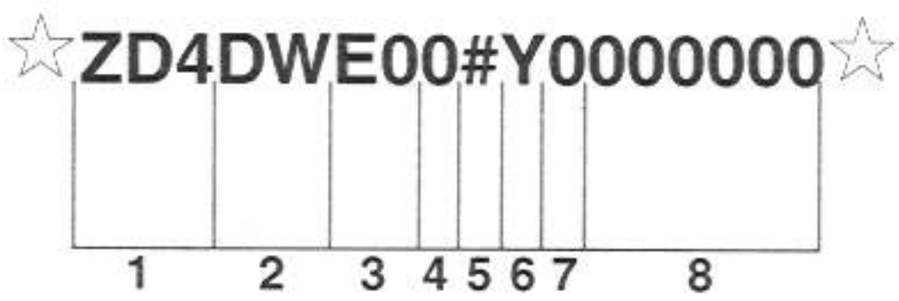

FOR STATE OF CALIFORNIA ONLY:

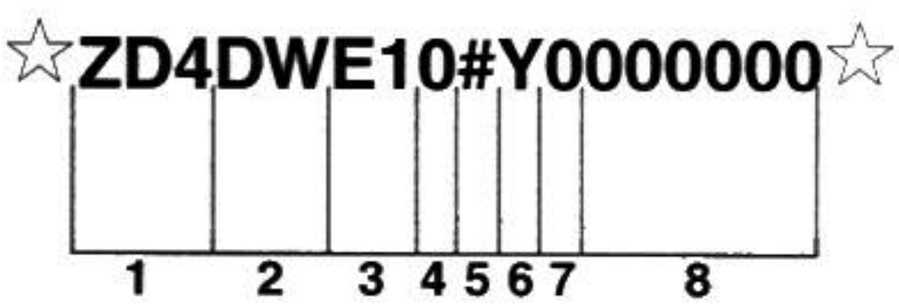

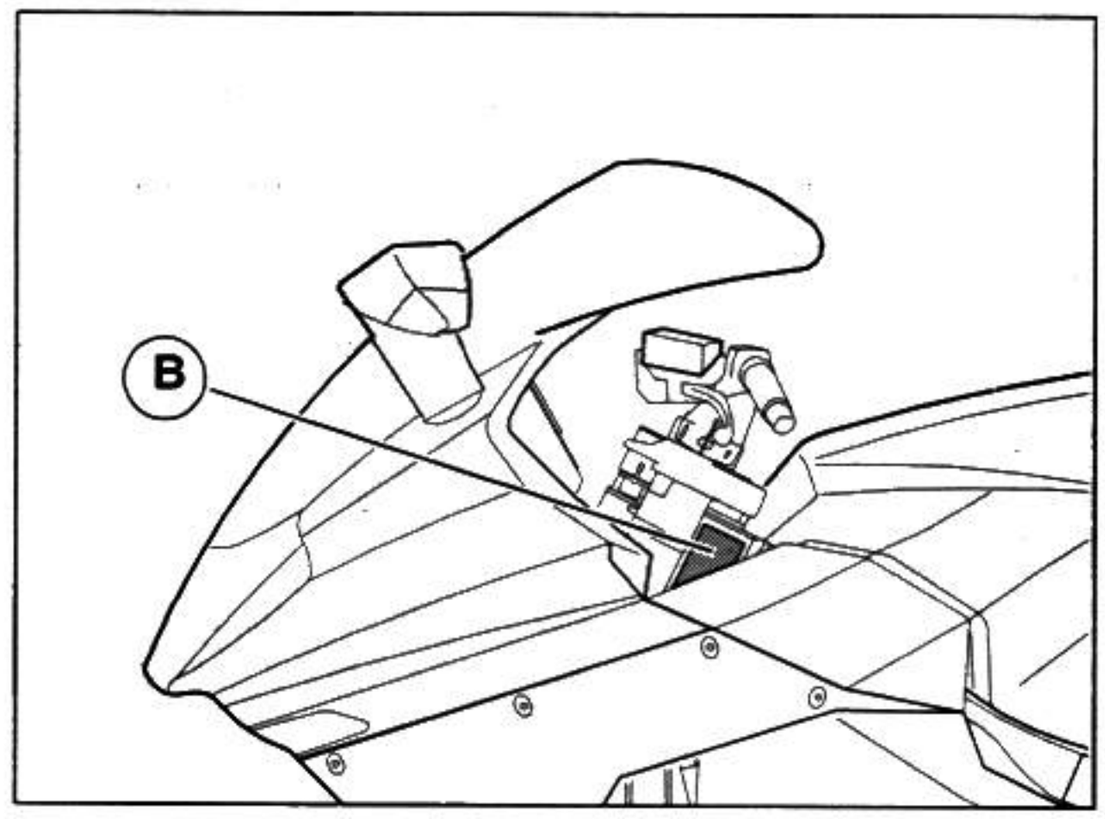

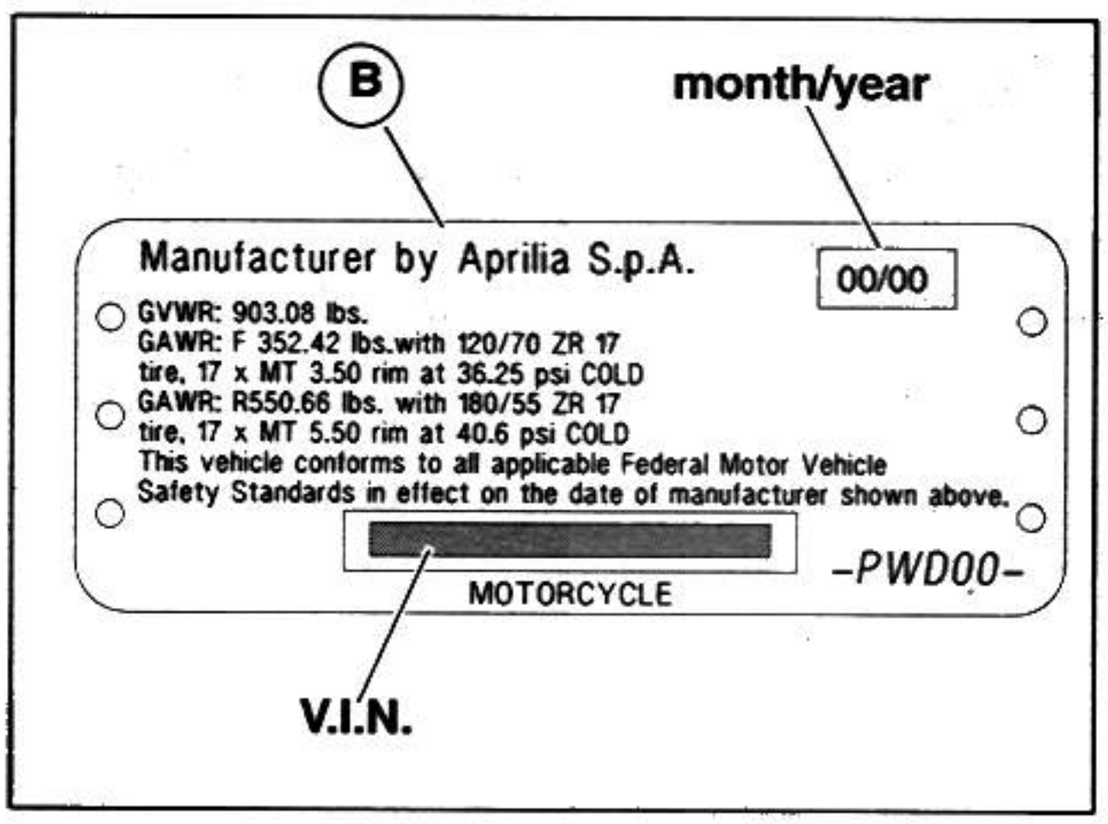

DIGIT MEANING

1) Manufacturer's identification alphanumeric code.
2) Vehicle type.
3) Model.
4) Country for which the vehicle is intended.
5) #=Check digit number.
6) Model year.
7) Assembling factory designation
   (N =NOALE-VE-,
   S =SCORZÉ -VE-,
   0 =NOT SPECIFIED).
8) Sequential serial number.

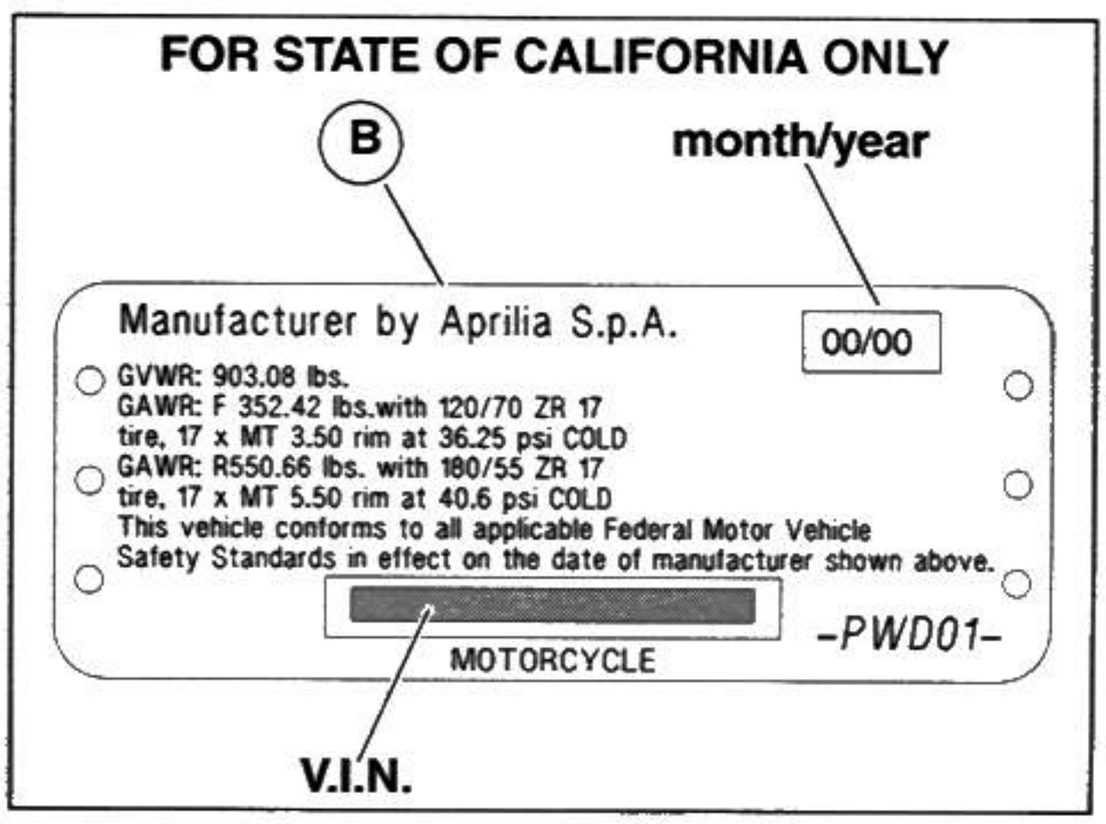

1.8 POSITION OF SERIAL NUMBERS

These numbers are required for vehicle registration.

NOTE Tampering with the serial numbers is subject to serious sanctions under criminal and civil law. Altering the frame number will void the warranty effective immediately.

1.8.1 FRAME NUMBER

The frame number is stamped on the right side of the steering column. This is also the Vehicle Identification Number.

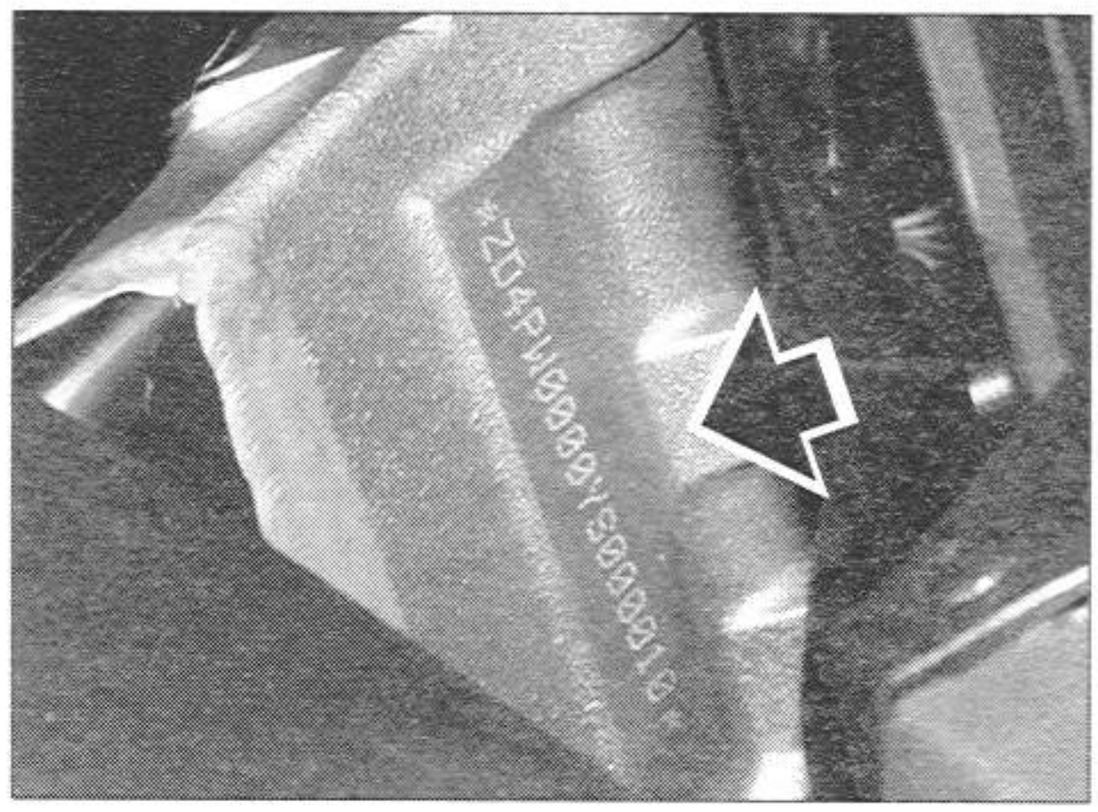

1.8.2 ENGINE NUMBER

The engine number is engraved on the rear, near the countershaft sprocket.

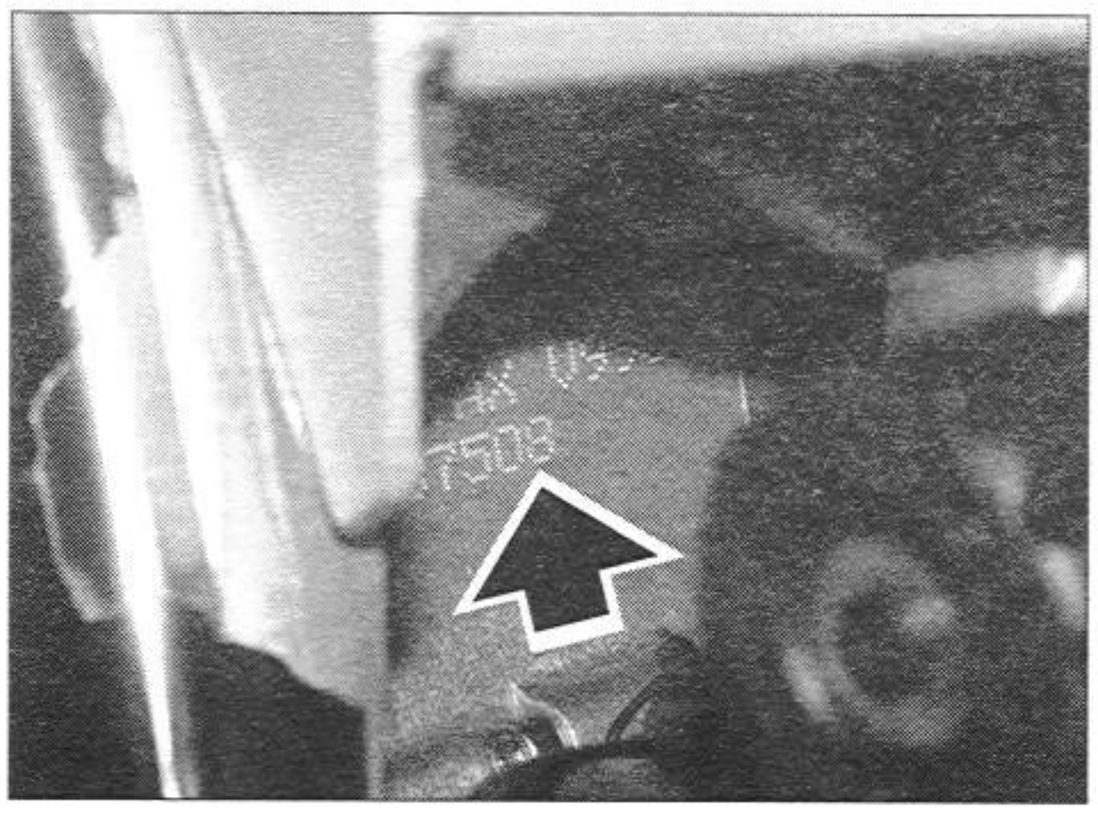

1.8.3 POSITION OF THE WARNING ADHESIVE LABELS

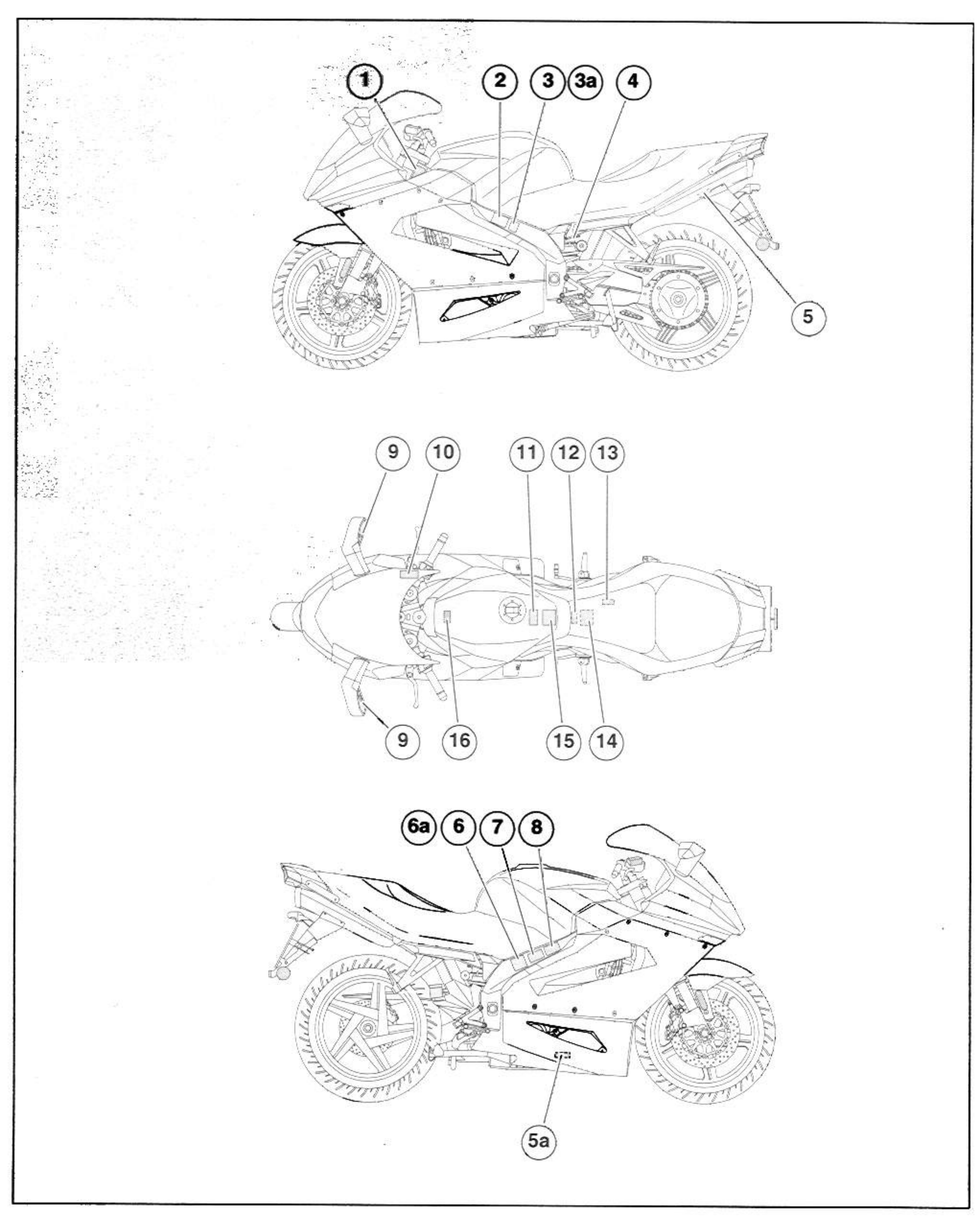

Ref.	Description
1	Manufacturer by Aprilia S.p.A. 00/00 GVWR: 903.08 lbs. GAWR: F 352.42 lbs.with 120/70 ZR 17 tire, 17 x MT 3.50 rim at 36.25 psi COLD GAWR: R550.66 lbs. with 180/55 ZR 17 tire, 17 x MT 5.50 rim at 40.6 psi COLD This vehicle conforms to all applicable Federal Motor Vehicle Safety Standards in effect on the date of manufacturer shown above. MOTORCYCLE -PWD00-
1a	FOR STATE OF CALIFORNIA ONLY. Manufacturer by Aprilia S.p.A. 00/00 GVWR: 903.08 lbs. GAWR: F 352.42 lbs.with 120/70 ZR 17 tire, 17 x MT 3.50 rim at 36.25 psi COLD GAWR: R550.66 lbs. with 180/55 ZR 17 tire, 17 x MT 5.50 rim at 40.6 psi COLD This vehicle conforms to all applicable Federal Motor Vehicle Safety Standards in effect on the date of manufacturer shown above. MOTORCYCLE -PWD01-
2	NOT PROVIDED FOR 49 STATES.
2a	FOR STATE OF CALIFORNIA ONLY EES EVAP FAMILY: 1ASPE0024MLA HOSE ROUTING DIAGRAM Aprilia S.p.A. -PWD01- FUEL TANK; ONE WAY VALVE; "Y" THREE WAY CONNECTOR; AIR; PURGE CONTROL VALVE; AIR BOX; "T" THREE WAY CONNECTORS; NARROW PASSAGE; CARBON CANISTER; AIR; "T" THREE WAY CONNECTORS
3	WARNING! ● CONTAINS HIGH PRESSURE NITROGEN GAS. ● SEE WORKSHOP MANUAL FOR DISPOSAL AND ADJUSTING UNIT. ● DO NOT OPEN. DO NOT INCINERATE. INCINERATION, PUNCTURE OR DISASSEMBLY MAY CAUSE THIS UNIT TO EXPLODE.
4	WARNING! Do not use any tire other than those recommended and approved by Aprilia. Maintain proper tire inflation. Do not use any tire with less than 1/8"(3mm) tread remaining. Do not repair any tire, nor use a repaired tire. Do not ride your motorcycle overloaded or with an unbalanced load. Failure to follow these warnings can lead to an accident and serious injuries or death. Always ensure that the chain is correctly adjusted. See owner's manual. CHAINE TENSION WITH NO LOAD -PWD00- aprilia 25 mm ▲ Tires pressure bar-(psi): Front tire 2.5 (36.25); Rear tire 2.8 (40.6) Tires size: Front tire Pirelli-Metzeller Michelin 120/70 ZR 17"; Rear tire Pirelli-Metzeller Michelin 180/55 ZR 17"
4a	FOR STATE OF CALIFORNIA ONLY. WARNING! Do not use any tire other than those recommended and approved by Aprilia. Maintain proper tire inflation. Do not use any tire with less than 1/8"(3mm) tread remaining. Do not repair any tire, nor use a repaired tire. Do not ride your motorcycle overloaded or with an unbalanced load. Failure to follow these warnings can lead to an accident and serious injuries or death. Always ensure that the chain is correctly adjusted. See owner's manual. CHAINE TENSION WITH NO LOAD -PWD01- aprilia 25 mm ▲ Tires pressure bar-(psi): Front tire 2.5 (36.25); Rear tire 2.8 (40.6) Tires size: Front tire Pirelli-Metzeller Michelin 120/70 ZR 17"; Rear tire Pirelli-Metzeller Michelin 180/55 ZR 17"
5	WARNING! DO NOT ALLOW KEY CHAIN AND ANY OTHER ITEM TO FALL BETWEEN THE STEERING HEAD AND THE BODY OF MOTORCYCLE. THIS CAN CAUSE LOSS OF CONTROL.
6	WARNING! • Wear a helmet, eye protection, and bright protective clothing. • Don't ride after consuming alcohol or other drugs. • Slow down on slippery surface, unfamiliar terrain or when visibility is reduced. • Read owner's manual carefully. • Failure to follow these warnings can lead to an accident and serious injuries or death. • USE UNLEADED FUEL MINIMUM OCTANE RATING (R + M) / 2 METHOD 90. • See owner's manual for the correct running in and maintenance of the vehicle.
7	WARNING! Never install accessories or replacement parts not approved by Aprilia as original equipment. This can degrade the handling and safety of your motorcycle, and can cause an upset with subsequent accident and serious injury or even death. The stability and safety of any motorcycle is adversely affected by the addition of any load carrying accessory. See owner's manual.

Ref.	Description
8	aprilia BATTERY SERVICE WARNING! + − MAX Maintain electrolyte level between the two level marks. Use only distilled water. Always keep the battery charged. Never disconnect the battery or regulator with the engine running. This will destroy the entire electrical system.
9	aprilia SPARE PARTS IDENTIFICATION YEAR: Y 1 2 3 4 UM: A B C D E I UK A P SP B D F E GR NL CH DK J SGP BLO IL ROK MAL RCH NR AUS USA BR RSA NZ CDN
10	WARNING! Contain sulfuric acid which can cause severe injuries. Avoid contact with skin, eyes or clothing. Antidote: EXTERNAL - Flush with water. INTERNAL - Drink large quantities of water or milk. Follow with milk of magnesia, beaten egg or veg. oil. Call physician immediately. Eyes: Flush with water for 15 minutes and get prompt medical attention. KEEP OUT OF REACH OF CHILDREN. Batteries produce explosive gases. Keep sparks, flames, cigarettes away. Charge only in well-ventilated space. Always wear protective goggles when working around batteries. Always connect the battery vent tube. Failure to heed this warning will cause corrosion of the electrical system.
11	OBJECTS IN MIRROR ARE CLOSER THAN THEY APPEAR.
12	WARNING! • Keep windshield clean at all times. • Clean only with a soft cloth and warm water with a mild detergent. • Replace windshield if becomes scratched or discoloured so as to interfere with view. • Do not allow any alcaline or strong acid cleaner, gasoline, brake fluid or any other solvent to contact the windshield. • When replacing windshield, use only Aprilia original replacement windshield.
13	WARNING! DO NOT REMOVE THE CAP UNTIL THE ENGINE IS ENTIRELY COOL. COOLANT IS HOT AND UNDER PRESSURE. FAILURE TO OBSERVE THIS WARNING MAY LEAD TO SERIOUS BURNS. USE ONLY FLUID FOR SEALED CIRCUITS. USE ONLY ANTIFREEZE AND ANTICORROSIVE WITHOUT NITRATE, ENSURING PROTECTION -35°C AT LEAST.
14	FOR STATE OF CALIFORNIA ONLY. MOTORCYCLE NOISE EMISSION CONTROL INFORMATION THIS 2001 ASP42E0998 MOTORCYCLE, B-1128 MEETS EPA NOISE EMISSION REQUIREMENTS OF 80 dBA AT 5088 closing r.p.m. BY FEDERAL TEST PROCEDURE. MODIFICATIONS WHICH CAUSE THIS MOTORCYCLE TO EXCEED FEDERAL NOISE STANDARDS ARE PROHIBITED BY FEDERAL LAW. SEE OWNER'S MANUAL. -PWD00- aprilia
14a	MOTORCYCLE NOISE EMISSION CONTROL INFORMATION THIS 2001 ASP42E0998 MOTORCYCLE, B-1128 MEETS EPA NOISE EMISSION REQUIREMENTS OF 80 dBA AT 5088 closing r.p.m. BY FEDERAL TEST PROCEDURE. MODIFICATIONS WHICH CAUSE THIS MOTORCYCLE TO EXCEED FEDERAL NOISE STANDARDS ARE PROHIBITED BY FEDERAL LAW. SEE OWNER'S MANUAL. -PWD01- aprilia
15	FOR STATE OF CALIFORNIA ONLY. VEHICLE EMISSION CONTROL INFORMATION-PWD00- ENGINE DISPLACEMENT: 998 cc ENGINE FAMMLY:1ASPC0.99PWC THIS VEHICLE CONFORMS TO U.S.EPA REGULATIONS APPLICABLE TO 2001 MODEL YEAR NEW MOTORCYCLES. ENGINE EXHAUST CONTROL SYSTEM: OC ENGINE TUNE UP SPECIFICATIONS IGNITION TIMING: 16.8 ± 2° AT 2500 RPM IDLE SPEED: 1250 ± 100 RPM IN NEUTRAL VALVE CLEARANCE: INLET 0.005–0.006 inch (0.12–0.17mm) OUTLET 0.009–0.011 inch (0.23–0.28mm) SPARK PLUG: NGK R DCPR9E FUEL: MINIMUM OCTANE RATING (M+R)/2 METHOD 90 OIL: ENGINE OIL VISCOSITY SAE 15W-50 Aprilia S.p.A. Via G.Galilei 1 30033 Noale (VE) ITALY aprilia
15a	VEHICLE EMISSION CONTROL INFORMATION -PWD01- ENGINE DISPLACEMENT: 998 cc ENGINE FAMILY: 1ASPC0.99PWC THIS VEHICLE CONFORMS TO U.S. EPA AND CALIFORNIA REGULATIONS APPLICABLE TO 2001 MODEL YEAR NEW MOTORCYCLES AND IS CERTIFIED TO 1.4 HC G/KM ENGINE FAMILY EXHAUST EMISSION STANDARD IN CALIFORNIA. ENGINE EXHAUST CONTROL SYSTEM: OC ENGINE TUNE UP SPECIFICATIONS IGNITION TIMING: 16.8° ± 2° AT 2500 RPM IDLE SPEED: 1250 ± 100 RPM IN NEUTRAL VALVE CLEARANCE: INLET 0.005÷0.006 inch (0.12÷0.17 mm) OUTLET 0.009÷0.011 inch (0.23÷0.28 mm) SPARK PLUG: NGK R DCPR9E FUEL: MINIMUM OCTANE RATING (M+R)/2 METHOD 90 OIL: ENGINE OIL VISCOSITY SAE 15W-50 Aprilia S.p.A. Via G.Galilei 1 30033 Noale (VE) ITALY aprilia
16	MUFFLER STAMPING

1.9 CALIFORNIA EVAPORATIVE EMISSION SYSTEM

The system consists of:
1) Fuel tank
2) Water drain line
3) Fuel tank breather nipple
4) Breather line (to tee)
5) Tee
6) Breather line (to purge valve)
7) Purge valve
8) Breather line (to carbon canister)
9) Carbon canister
10) Drain line (to restrictor)
11) Restrictor Ø 0.06 in (Ø 1.5 mm)
12) Drain line (from restrictor)
13) Tee
14) Vacuum line (from purge valve)
15) Drain line
16) Tee
17) Cylinder synchronization line
18) Drain line (to manifold vacuum port)
19) Ported vacuum port (left part of throttle body)
20) Air box
21) Warm air inlet fitting (from air box)
22) Tee
23) Sensor line to fuel pressure regulator (Electronic Contrl Unit)
24) Warm air inlet (from air box)
25) Tee
26) Warm air inlet (to carbon canister)
27) Warm air inlet (to one way valve)
28) One way valve
29) Warm air inlet (from one way valve)

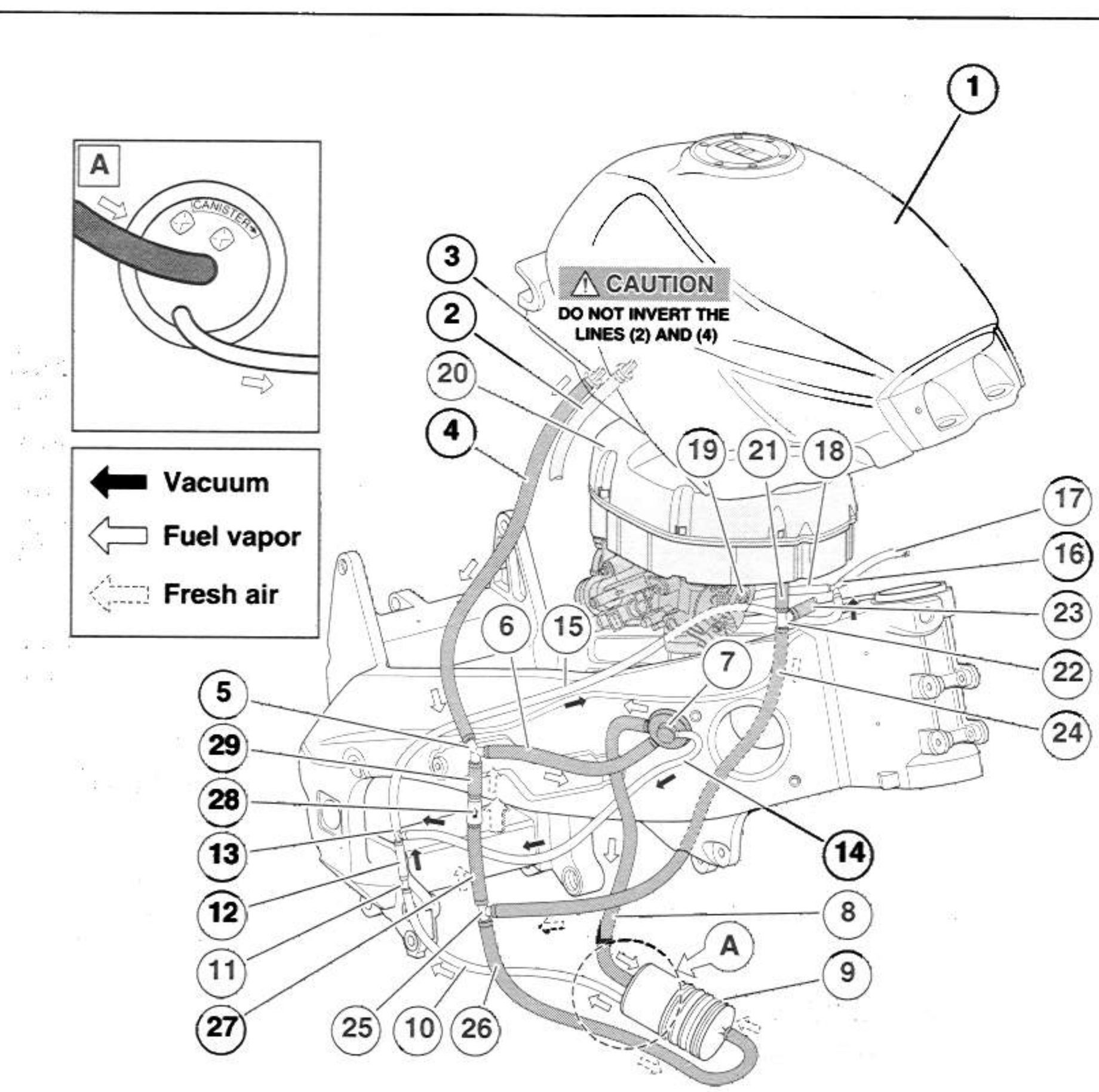

1.10 SPARE PARTS

When making replacements, use only Original **aprilia** Spare Parts.
Original **aprilia** spare parts are high quality, and are designed and built explicitly for **aprilia** vehicles.

⚠ WARNING

Use of spare parts NOT originally manufactured by aprilia may cause performance problems and damage.

1.11 SPECIFICATIONS

DIMENSIONS	
Max. length	85.472 in (2,170 mm)
Max. width	29.133 in (740 mm)
Max. height (at front fairing)	48.818 in (1,240 mm)
Saddle height	32.283 in (820 mm)
Wheelbase	56.495 in (1,435 mm)
Minimum ground clearance	5.314 in (135 mm)
Weight in riding condition (including fluids and fuel)	513.085 lb (235 kg)
ENGINE	
Type	60° longitudinal V-type, two-cylinder, 4-stroke, with 4 valves per cylinder, DOHC.
Number of cylinders	2
Total displacement	60.878 cu in (997.62 cm³)
Max. rated power (to crankshaft)	86.5 kW (118 HP) at 9250 rpm
Max. rated power (to crankshaft) (F)	77 kW (104 HP) at 9250 rpm
Max. Torque	96.5 Nm (9.78 kgm) at 7250 rpm
Max. Torque (F)	90 Nm (9.17 kgm) at 7000 rpm
Bore/stroke	97 mm / 67.5 mm
Compression ratio	11,8 ± 0,5: 1
Average piston speed	22.5 m/s at 10000 rpm
Camshaft during intake stroke	262°, valve lifting = 0.42 in (10.6 mm)
Camshaft during exhaust stroke	259°, valve lifting = 0.42 in (10.6 mm)
Valve advance (with valve clearance 1 mm) opening during intake stroke closing during intake stroke opening during exhaust stroke closing during exhaust stroke	 20° before TDC 59° after BDC 64° before TDC 15° after BDC
Intake valve clearance	0.005-0.007 in (0.12-0.17 mm)
Exhaust valve clearance	0.009-0.011 in (0.23-0.28 mm)
Engine idling rpm	1250 ± 100 rpm
Maximum rpm	10500 ± 100 rpm
Ignition	electronically controlled
Starting	electric
Spark advance	At start: 5° before TDC. Additional advance automatic, depending on operating conditions
Starter motor	12 V / 0.9 kW
Starter motor gear ratio	i= 49/9 * 30/11 * 64/30 = 31.677
Clutch	multidisc in oil bath with hydraulic control on the left side of the handlebar and PPC device - 9 lined discs; 0.14 in (3.5 mm) thick - 9 plain discs; 0.06 in (1.5 mm) thick

CONT'D ➤

ENGINE	
Gearshift	mechanical, 6 gears with foot control on the left side of the engine
Lubrication system	dry sump with separate oil tank, 2 trochoidal pumps, cooling radiator
Oil pressure	min 72.52 PSI (500 kPa) (5 bar) *max. 80 °C (176 °F) and 6000 rpm
Air filter	dry filter cartridge
Cooling	fluid-cooled
Coolant pump gear ratio	i wp = 28/27 * 28/28 = 1.037
Coolant pump delivery (with thermostat open)	23.8 gal/min (90 l/min) at 9000 rpm
Thermostat valve opening temperature	65 ± 2 °C (149 ± 5 °F)
Engine dry weight	~ 143 lb (~ 67 kg)
CAPACITY	
Fuel (including reserve)	6.60 gal (20.5 l)
Fuel reserve	1.06 ± 0.26 gol (4 ± 1 l)
Engine oil	oil change only: 3.9 qt (3700 cm^3), oil and filter change: 4.1 qt (3900 cm^3)
Fork oil (for each leg)	18.70 ± 0.08 fl oz (553 ± 2.5 cm^3)
Coolant	0.66 gal (2.5 l) (50% water + 50% nitrite-free anti-corrosion antifreeze, ethylene glycol)
Seats	2
Max. vehicle load (rider + passenger + luggage)	401.24 lb (182 kg)

DRIVE					
GEAR RATIOS	Ratio 1ª 2ª 3ª 4ª 5ª 6ª	Primary 31/60 = 1: 1.935	Secondary 14/35 = 1: 2.500 16/28 = 1: 1.750 19/26 = 1: 1.368 22/24 = 1: 1.091 23/22 = 1: 1.957 27/23 = 1: 0.852	Final ratio 16/43 = 1: 2,687	Total ratio 13.000 9.102 7.117 5.674 4.975 4.431
sprocket teeth			16		
Drive chain			Endless type (with no master link) with sealed links, model 525, dimensions 5/8" x 5/16"		

FUEL SYSTEM	
Type	electronic injection
Choke	Ø 1.85 in (Ø 51 mm)
POWER SUPPLY	
Type	indirect injection (MULTIPOINT)
Fuel	Unleaded gasoline, super, minimum octane rating 92 (R + M / 2)
FRAME	
Type	two-beam frame with light alloy cast elements and extruded elements
Rake	25.7°
Trail	3.82 in (97 mm)

CONT'D ➤

SUSPENSIONS	
Front	Upside-down telescopic fork, hydraulic damped, fork leg Ø 1.69 in (Ø 43 mm)
Stroke	4.72 in (120 mm)
Rear	light alloy rear swinging arm, and hydropneumatic adjustable mono-shock absorber
Wheel stroke	4.72 in (120 mm)
BRAKES	
Front	double floating disc - Ø 11.81 in (300 mm), four piston caliper - Ø 1.18 (30 mm) and 1.33 (34 mm) pistons
Rear	single disc - Ø 10.03 in (255 mm), double piston caliper - Ø 1.10 in (28 mm)
WHEEL RIMS	
Type	light alloy
Front	3.50 x 17"
Rear	5.50 x 17"

TIRES

Wheel	Brand	Type	Size	Recommended	Pressure PSI (kPa) (Bar) ♦ solo rider
Front (standard)	METZELER	ME Z4 B	120/70ZR17"	♦	36.2 (250) (2.5)
Rear (standard)	METZELER	ME Z4	180/55ZR17"	♦	40.6 (280) (2.8)
Front (standard)	MICHELIN	PILOT SPORT	120/70ZR17"	❖	36.2 (250) (2.5)
Rear (standard)	MICHELIN	PILOT SPORT	180/55ZR17"	❖	40.6 (280) (2.8)
Front (alternatively)	METZELER	ME Z3	120/70ZR17"	❖	36.2 (250) (2.5)
Rear (alternatively)	METZELER	ME Z3	180/55ZR17"	❖	40.6 (280) (2.8)
Front (alternatively)	PIRELLI	MTR21A	120/70ZR17"	♦	36.2 (250) (2.5)
Rear (alternatively)	PIRELLI	MTR22	180/55ZR17"	♦	40.6 (280) (2.8)

♦ = Normal use; ❖= Competitive use

SPARK PLUGS	
Standard	NGK R DCPR9E
Spark plug gap	0.024 - 0.028 in (0.6 - 0.7 mm)
Resistance	5KΩ
ELECTRICAL SYSTEM	
Battery	12 V - 12 Ah
Main fuses	30 A
Secondary fuses	15A
Alternator (with permanent magnet)	12 V - 470 W
Starter motor	12 V / 0.9 kW

CONT'D ➤

BULBS	
Low beam (halogen)	12 V - 55 / 55 W H4
High beam (halogen)	12 V - 60 W H3
Front parking light	12 V - 5 W
Direction indicators	12 V - 10 W
Rear parking light/license plate light/brake light	12 V - 5/21 W
Tachometer	LED
Right multi function display	LED
Left multi function display	LED
WARNING LIGHTS	
Gearshift in neutral	LED
Direction indicators	LED
Fuel reserve	LED
High beam	LED
Side stand down	LED
Engine oil pressure	LED
Red line	LED

1.12 LUBRICANT CHART

Engine oil (recommended): IP EXTRA RAID 4, SAE 15W - 50 or Agip TEC 4T SAE 15W - 50. As an alternative to the recommended oils, it is possible to use high-quality oils with performance characteristics equivalent or superior to CCMC G-4,A.P.I. SG specifications.

Fork oil (recommended): fork oil IP F. A . 5 W or Agip F.A. 20W;

alternatively IP FORK 5W or Agip FORK 20W.
If you need an oil with characteristics halfway between those offered by IP F.A. 5W and IP F.A. 20W or Agip FORK 5W and Agip FORK 20W, the two products may be mixed together as described below:
SAE 10W = IP F.A. 5W 67% of volume, + IP F.A. 20W 33% of volume or

Agip FORK 5W 67% of volume, + Agip FORK 20W 33% of volume.

SAE 15W = IP F.A 5W 33% of volume, + IP F.A. 20W 67% of volume or

Agip FORK 5W 33% of volume, + Agip FORK 20W 67% of volume.

Bearings and other lubrication points (recommended):

IP AUTOGREASE MP or Agip GREASE 30.
As an alternative to the recommended product, use high-quality grease for rolling bearings, working temperature range -30°C...+140°C (-22°F...+248°F), dripping point 150°C...230°C (302°F...446°F), high protection against corrosion, good resistance to water and oxidation.

Protection of battery poles: Neutral grease or Vaseline.

Spray grease for chains (recommended): IP CHAIN SPRAY or Agip CHAIN LUBE.

⚠ DANGER

Use only fresh brake fluid.

Brake fluid (recommended): IP F.F., DOT 5 (DOT 4-compatible) or Agip BRAKE 5.1, DOT 5 (DOT 4-compatible).

⚠ DANGER

Use only fresh clutch fluid.

Clutch fluid (recommended): IP F. F. , DOT 5 (DOT 4-compatible) or Agip BRAKE 5.1, DOT 5 (DOT 4-compatible).

⚠ DANGER

Use only nitrite-free antifreeze and anticorrosive, that ensures protection at -35 °C (-31 °F) at least.

Engine coolant (recommended): IP ECO-BLUE - 40°C (-40°F) or Agip COOL.

1.13 CONSUMABLES

Use only the products listed below for any maintenance work. These materials have been tested for many years and are suitable for use in all application conditions indicated by the manufacturer.

NOTE Those consumables that are coded are available upon request, see 1.13.2 (USING CONSUMABLES).

1.13.1 PRODUCT PROPERTIES

Product	Use and Properties
LOCTITE® 243 blue	Thread locker for screws and nuts up to M36, and to seal connections for fluids, medium strength. It can be used on parts which have not been completely degreased The hardening time depends on the temperature and the material (maximum one hour): Resistance to temperatures in the range -55 to 150° C (-131° F to 302° F).
LOCTITE® 648 green	High strength thread locker for screw threads. The hardening time dipends on the temperature and the material (maximum twelve hours). Resistance to temperatures in the range -55 to 175° C (-131° F to 347° F). To remove nuts that have been fastened with Loctite 648, it may be necessary to heat the assembled parts to a temperature of 250° C (482° F)
LOCTITE® 574 orange	Solvent-free joint cement, to be used instead of gaskets where components are held firmly together, and where a precise distance is required between the two components. Applied in its liquid state, it hardens after assembly on contact with the metal within a few hours. A seal is created whose surface structure adapts to the surfaces to be sealed. Resistance to temperatures in the range – 55 to 200 °C (from – - 131 to 392 °F); where applied, it seals the surfaces against corrosion.
LOCTITE® 8150	Paste to be used on components subjected to high temperatures.
LOCTITE® Anti Seize 15378	Lubricant and anticorrosive, resistant to high temperatures. Sprayed on both components, it ensures low sliding friction and it also prevents corrosion.
MOLYKOTE® G-n	Lubricating grease, used on connections and bearings subject to heavy loads, and to lubricate threads and connections which are heavily torqued, in order to prevent corrosion, which would prevent subsequent disassembly. To be applied to both joining surfaces.
SILASTIC 732 RTV	Acts as a sealant, used to prevent water from getting inside the flywheel cover.

1.13.2 USING CONSUMABLES

Product	Code	Description of use
Engine oil (*)	8116050	- Assembling rivets on fork, dashboard/front fairing mount, saddle support and frame. - Assembling frame/engine and frame/fork adjusting bushings. - Assembling fairlead screws on frame. - Insertion steering head bearings. - Steering head bushing upper retainer. - On timing intermediate gear roller bearings. - On lower balanceshaft thrust washer. - Clutch disengaging shaft. - On valve stems and valve lifter buckets. - On valve guide oil seals. - On camshaft housings. - On the timing chain tightener. - On double starter gear and idler gear pins. - On the sprag clutch gear/sprag clutch contact surface. - On the sprag clutch inner contact surface.
LOCTITE® 243 (**)	0897651	- Fastening of steering damper bushing. - Fastening of rear brake caliper lock pivot. - Fastening of pinion. - Fastening of rear brake lever pivot. - Fastening of cooling electrofan on support. - Fastening of fuel return line connection. - Fastening of fuel filler cap. - Throttle cable pullet fastening nut. - Throttle cable support bracket fastening screws. - Throttle valve pin fastening nut. - Throttle valve potentiometer fastening screws. - On coolant pump center fastening screw. - On cylinder joining bracket fastening screws. - On engine half-case bearing lock screws. - On cylinder fastening studs. - On crankshaft position sensor fastening screws. - On index lever and plate fastening screws. - On crankshaft fastening nut. - On timing gear fastening screws. - On upper balanceshaft balanceweight fastening nut. - On intermediate timing gear bearing support lower fastening screw.
LOCTITE® 648 (**)	0899788	- On coolant pump idler gear pin. - On engine oil pump cap. - On clutch gear metal slip fastening screws. - Assemby sprag clutch flange/alternator rotor. - On sprag clutch flange/alternator rotor fastening screws. - On clutch housing fastening nut. - On lower balanceshaft balanceweight fastening screw. - On the alternator rotor inner taper. - On the flywheel fastening screw.
LOCTITE® 574 orange (**)	0899784	- Fastening of coolant thermal switch. - Fastening of coolant thermistors. - On neutral gear switch contact screw. - On the outer surface of the engine oil pump motor. - On cylinder base where it contacts the engine case.
LOCTITE® Anti Seize 15378 (**)	0297434	- On the main shaft and countershaft. - On the main shaft and countershaft housings. - On crankshaft and lower balanceshaft. - On the main shaft housing and spline.

Product	Code	Description of use
MOLYKOTE® G-n (**)	0297433	- On main bushing housings. - On main bushings. - On engine case bearing housings. - On coolant pump shaft. - On valve guide recesses in the head. - On valve guide edges. - On crankshaft and lower balanceshaft bushing housings. - On crankshaft and lower balanceshaft housings. - On connecting rod/piston pin bores. - On camshafts and cams. - On starter motor fastening housing.
SILASTIC 732 RTV (**)	0297386	- On cable bracket on flywheel cover. - On camshaft sensor cable.
Bimol Grease	481 8116053	- Assembly of front and rear wheel seals. - Assemby of swinging arm pivot bearings. - Assembly of clutch master cylinder control rod. - On rear wheel axle thread. - On steering head bearings. - Assembly of rear brake master cylinder control rod. - On rear brake lever pivot. - On intermediate timing gear thrust washer. - Lower balanceshaft oil seal. - Starter motor gear.
LUBERING ST Grease	8116038	- Assembly of cold-start control.
Temporary lubricant AP-LUBE	-	- Assembly of handlebar balanceweights grommet. - Assembly of throttle cable adjuster grommets. - Assembly of grommet on gearshift pedal. - Insertion of radiator lower pins on supporting grommets. - Assembly of breather tube on radiator and three-way manifold. - Assembly of coolant couplings on radiators. - Assembly of water and fuel drainage hoses on the fuel pump flange. - Assembly of throttle body torsion springs.
DID CHAIN LUBE Grease		- Lubrication of drive chain.
"Biosolvente" Frame detergent	8116031	- Washing of engine oil tank.
Cyanoacrylic glue "ACRILON 28"	8116945	- Assembly of air cleaner filter case seal.
MOTUL Degreaser MOTOWASH	-	- Cleaning of frame and swinging arm.
Anti-seize paste ANTI-SEIZE MOTAGEPASTE AS 1800	8116043	- Assembling of caps for checking CO on exhaust pipes.

Product	Code	Description of use
Alcohol	-	- Cleaning of left handlebar prior to assembly or grip. - Inserting of radiator breather tubes on "T"union. - Assembly of HV coil support grommet. - Assembly of side fairing grommets. - Cleaning of lower part of engine. - Assembly of start relay grommet. - Assembly of flexible couplings on rear wheel sprocket. - Assembly of grommets on engine oil radiator. - Assembly of coupling on coolant filler. - Cleaning of engine oil tank prior to application of transfers. - Assembly of dashboard/front fairing mount grommets. - Assembly of grommet on rear brake lever. - Assembly of lines on fuel filter (inside tank). - Assembly of coolant radiator union coupling. - Assembly of fuel lines on tank. - Cleaning of fuel tank prior to application of transfers.

(*) = see 1.12 (LUBRICANT CHART).
(**) = see 1.13.1 (PRODUCT PROPERTIES).

1.14 SPECIAL TOOLS

The appropriate special tools must be used in order to properly disassemble, reassemble, and adjust parts.
The use of special tools avoids the potential risk of damage caused by inappropriate tools and/or improvised methods. Below is a list of the special tools designed especially for this specific vehicle.
When ordering generic special tools, refer to the special tools manual.

⚠ WARNING

Before using special tools, consult any documents attached.

⚠ DANGER

Do not attempt to use makeshift tools to work on this vehicle. To do so will not only ensure that you damage the vehicle, sometimes irreparably, but you will also hurt yourself. Failure to use special tools will certainly lead to injury to the mechanic.

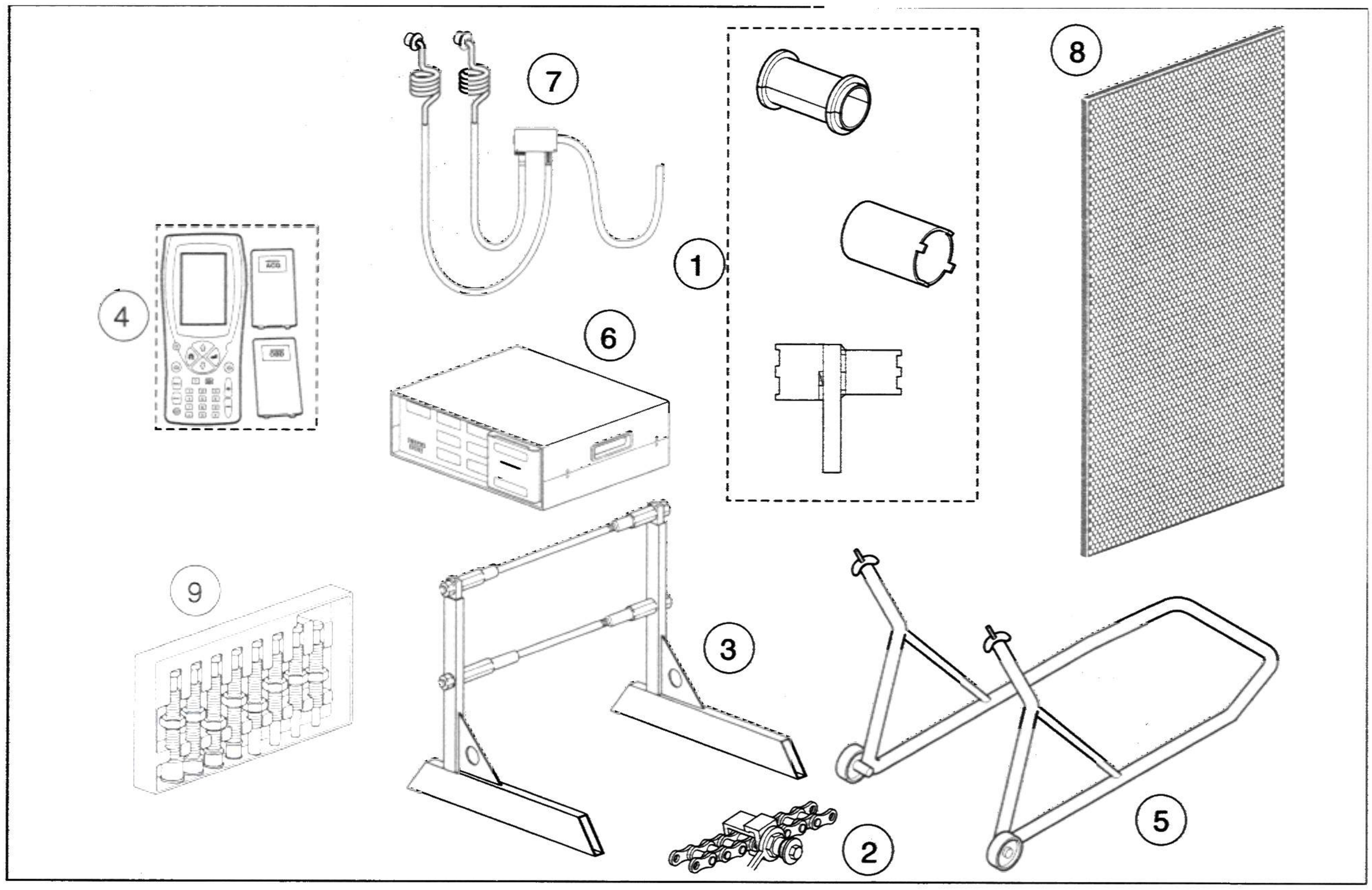

1.14.1 MISCELLANEOUS TOOLS

Pos.	Tool name and function	Code
1	Complete tool kit for chassis, including: – half-cylinders for installing oil seals, front fork – steering adjustment socket wrench – socket wrench for adjusting swinging arm pivot - engine mounts	8140203
2	Chain breaking/riveting tool	8140192
3	Center support stand	8140176
4	Axone 2000	8140595
5	Front support stand	8140195
6	Exhaust gas analyzer	8140196
7	Tubing kit for exhaust gas analyzer	8140202
8	Tool holder panel	8140199
9	Kit to extract bearings from Ø 0.39 in to Ø 1.18 in (Ø10 mm to Ø 30 mm)	8140180

1.14.2 ENGINE TOOLS

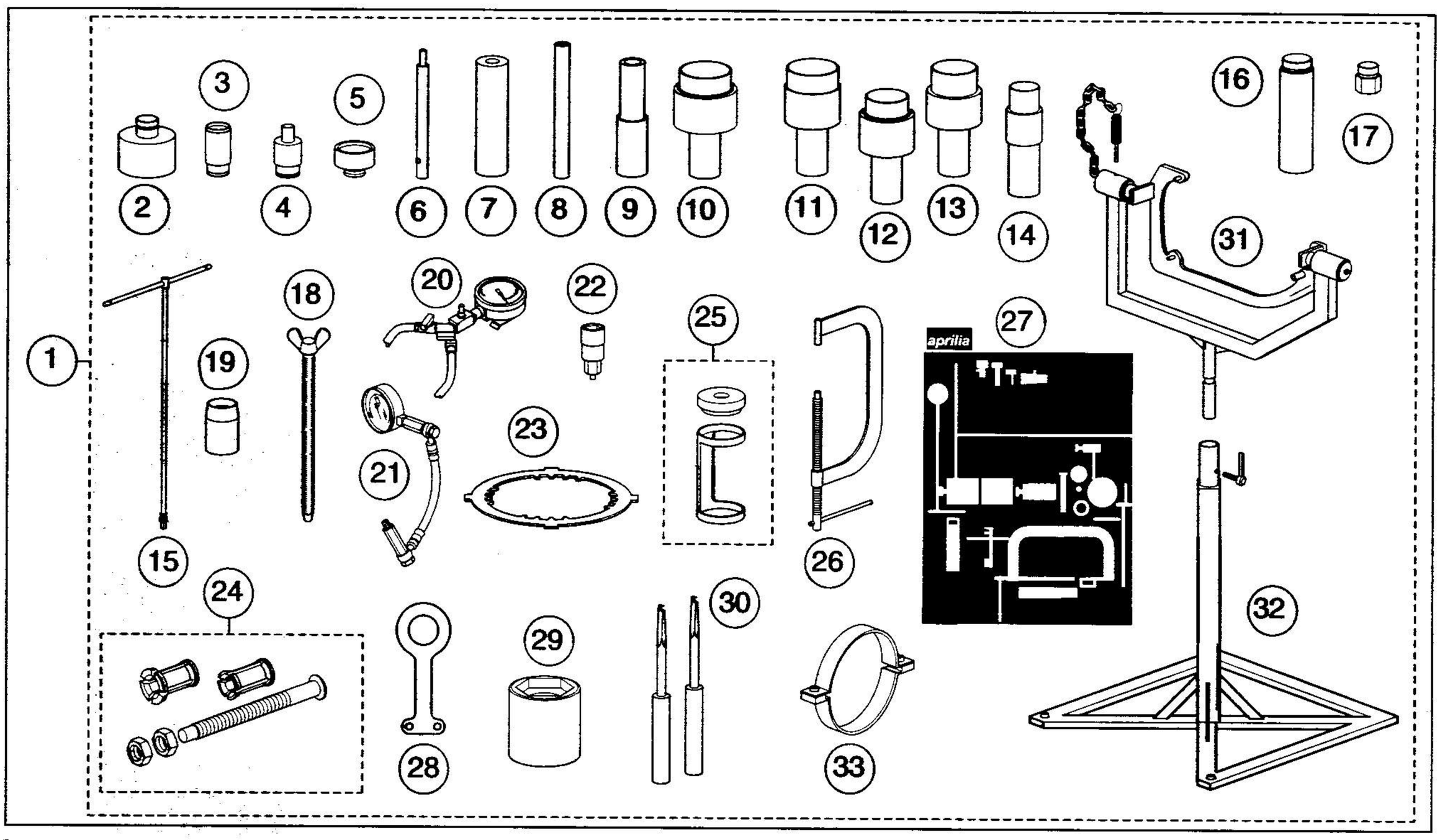

Pos.	Tool name and function	Code
1	**Complete engine tool kit**	**8140175**
2	Countershaft oil seal assembly drift	0277680
3	Upper balanceshaft oil seal assembly drift	0277660
4	Coolant pump shaft housing oil seal assembly drift	0277670
5	Coolant pump shaft housing sliding ring assembly drift	0877257
6	Valve guide disassembly drift	0277510
7	Valve guide oil seal assembly drift	0277695
8	Valve guide assembly drift	0277210
9	Main shaft oil seal-clutch shaft oil seal assembly drift	8140155
10	Crankshaft bushing inserter drift	0277729
11	Crankshaft sleeve puller drift	0277720
12-14	Crankshaft bushing inserter drift	0277725
13	Crankshaft-clutch cover bushing inserter drift	0277727
15	Cap socket wrench	8140177
16	Flywheel cover removal tool	0277252
17	Flywheel removal hexagonal bolt	0277780
18	Threaded bolt to lock the crankshaft at TDC	0240880
19	Countershaft guide bushing	0277308
20	Vacuum gauge	8140256
21	Fuel-oil pressure gauge	8140181
22	Alternator rotor bolt removal bushing	8140182
23	Clutch locking tool	0277881
24	Clutch cover bushing extractor	8140156 + 8140157 + 0276377
25	Valve spring-pusher tool	0276479
26	Valve disassembly and reassembly clamp	8140179
27	Adhesive for tool holder panel	8157143
28	Engine lifting eye hook	8140183
29	Primary transmission nut disassembly bushing	8140184
30	Clutch disc extraction hook levers	8140185
31	Engine mount	8140188
32	Engine support stand	8140187
33	Piston ring compression tool	8140186

1.15 PLACING THE VEHICLE ON THE SUPPORT STANDS

1.15.1 PLACING THE VEHICLE ON THE FRONT SUPPORT STAND OPT

- Place the vehicle on the center stand.
- At the same time, insert the two pins (1) of the stand (3) into the two holes (2) at the bottom of the front fork.
- Rest one foot at the front of the stand (3).
- Push the stand (3) all the way down.

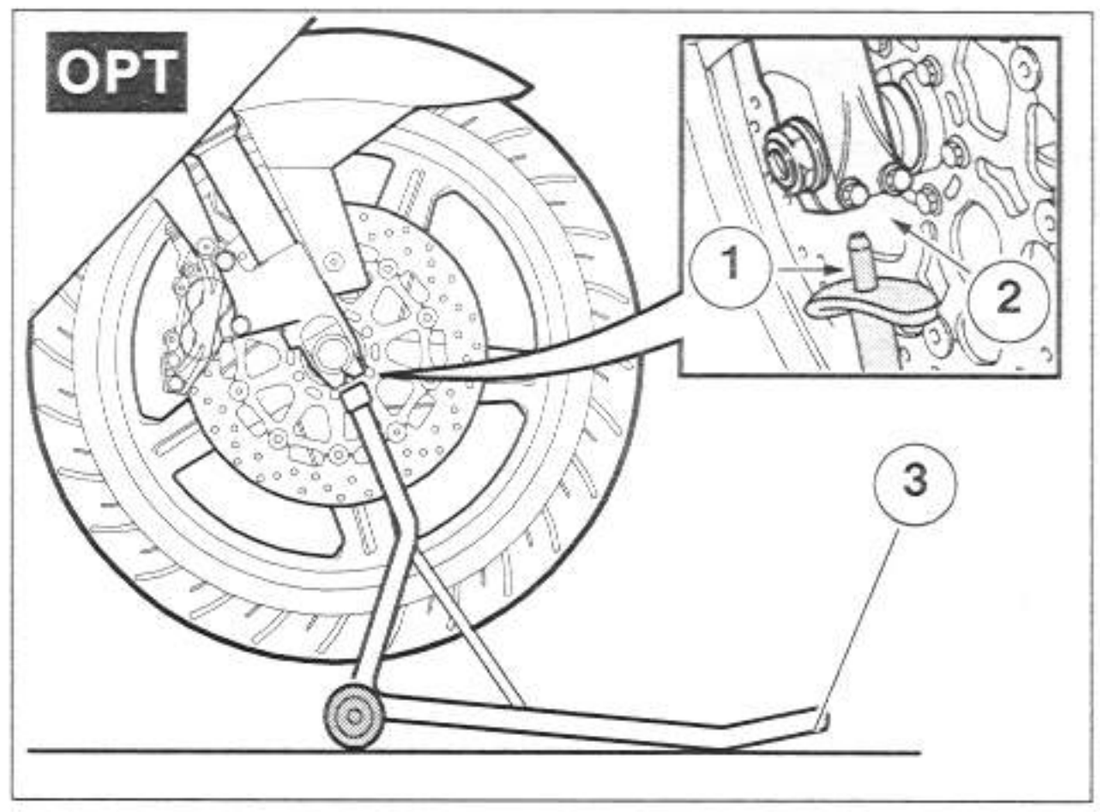

1.15.2 PLACING THE VEHICLE ON THE CENTER SUPPORT STAND OPT

Carefully read 1.3.9 (PRECAUTIONS AND GENERAL INFORMATION).

code 8140176 (complete stand).

- Remove the lower fairing, see 7.1.33 (REMOVING THE LOWER FAIRING).
- Place the vehicle on the appropriate front support stand OPT, see 1.15.1 (PLACING THE VEHICLE ON THE FRONT SUPPORT STAND).
- ★Hold the nut (1) in place.
- ★Loosen and remove the upper right rear engine bolt (2).

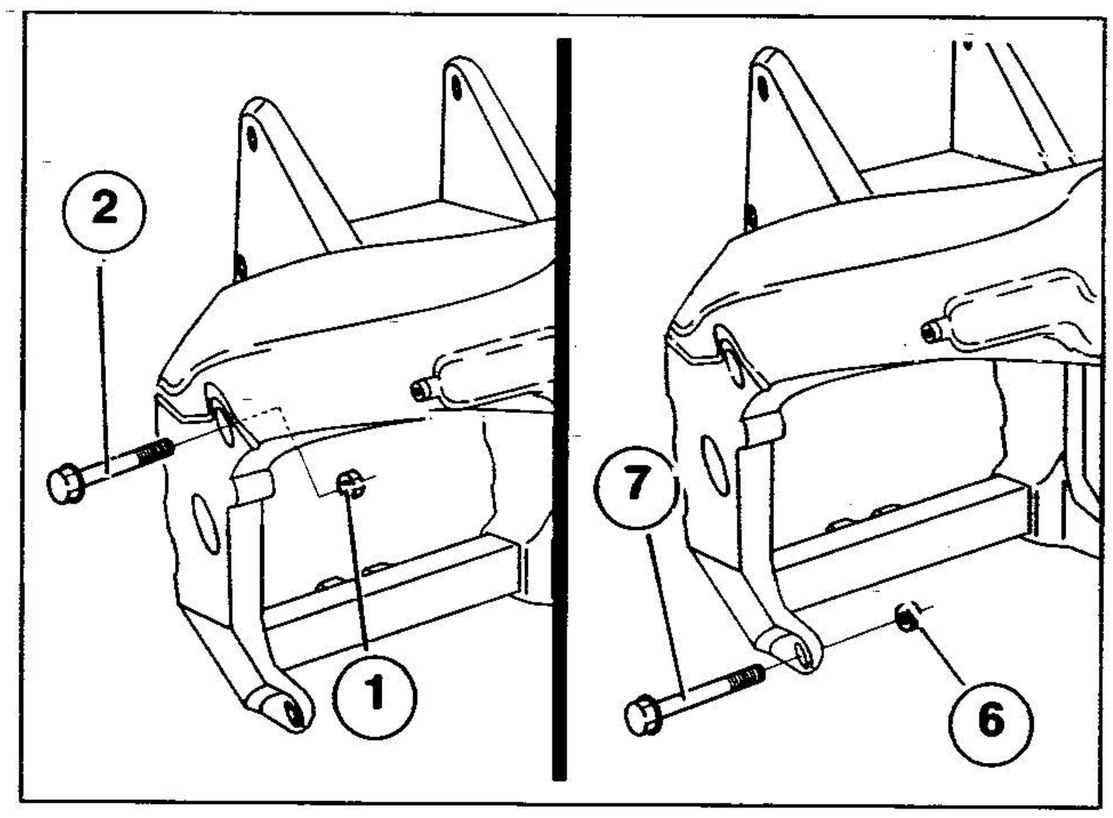

Tightening torque nut (1) / bolt (2): 36 ftlb (50 Nm).

NOTE The bolt (2) on the left side is longer.

- ★Retrieve the nut (1).
- Insert the upper right support pin (3) in the upper hole on the right-hand side.
- Insert the threaded shaft (4) in the upper hole on the left-hand side, and bolt it all the way onto the pin (3).
- Bolt the upper left support pin (5) all the way onto the threaded shaft (4) and tighten.
- ★Hold the nut (6) in place.
- ★Loosen and remove the upper right rear engine bolt (7).

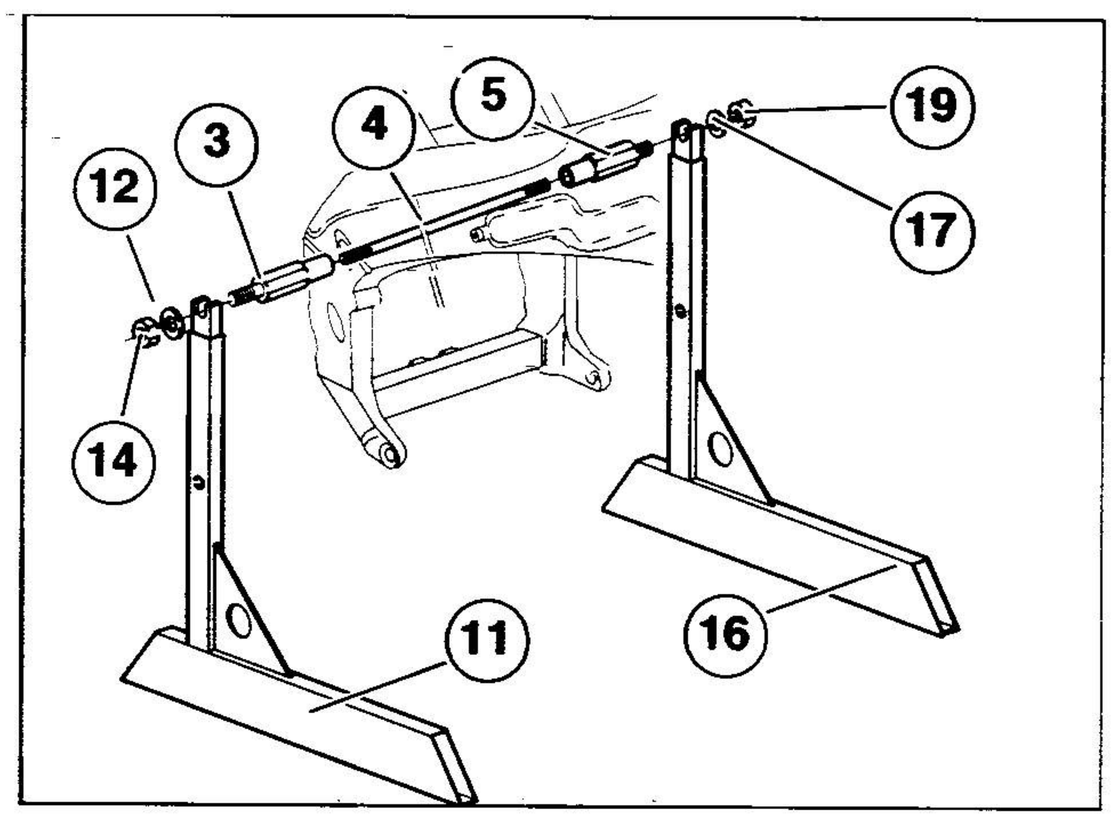

Tightening torque nut (6) / bolt (7): 36 ftlb (50 Nm).

NOTE The bolt (7), on the right side, is longer.

- Insert the lower right support pin (8) in the lower hole on the right-hand side.
- Insert the threaded shaft (9) in the lower hole on the left-hand side, and bolt it all the way onto the pin (8).
- Bolt the lower left support pin (10) all the way onto the threaded shaft (9) and tighten.
- Place the support bracket (11), with its longer side facing forward, on the two support pins (3-8).
- Insert the two washers (12-13) and two nuts (14-15), screwing them on by hand.
- Tighten the two nuts (14-15).
- Place the support bracket (16), with its longer side facing forward, on the two support pins (5-10).
- Insert the two washers (17-18) and two nuts (19-20), screwing them on by hand.
- Tighten the two nuts (19-20).

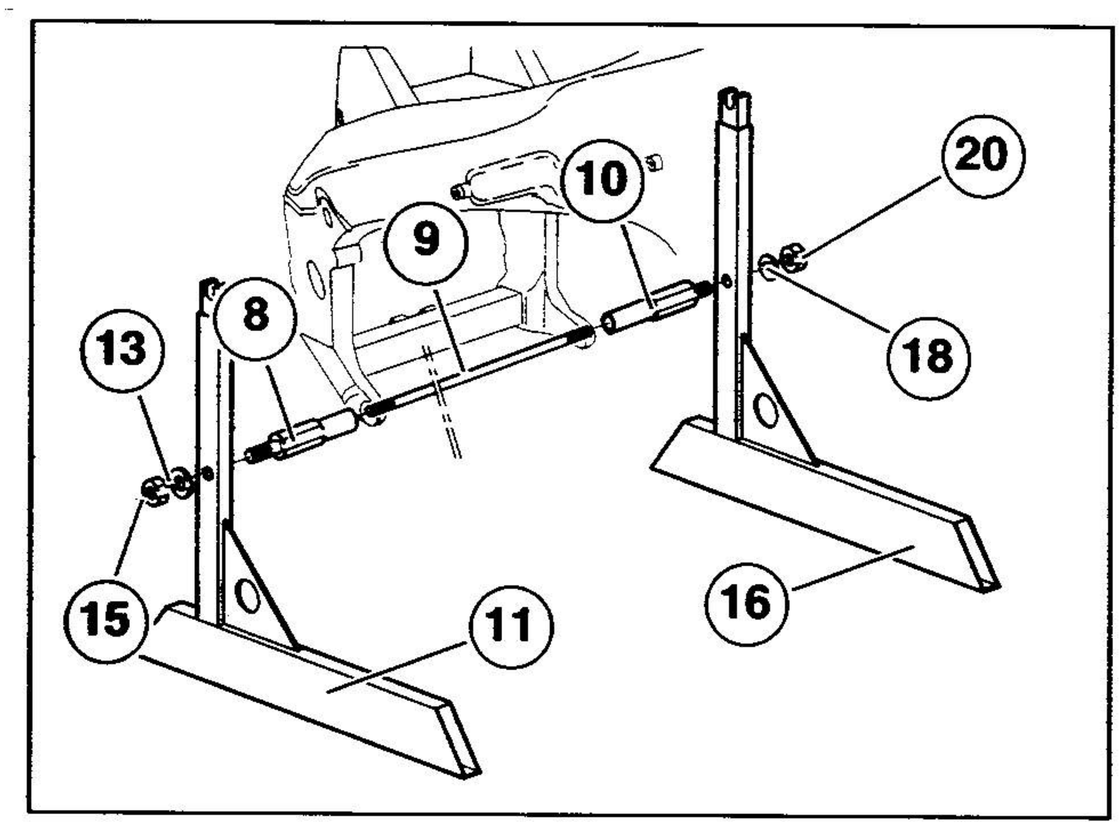

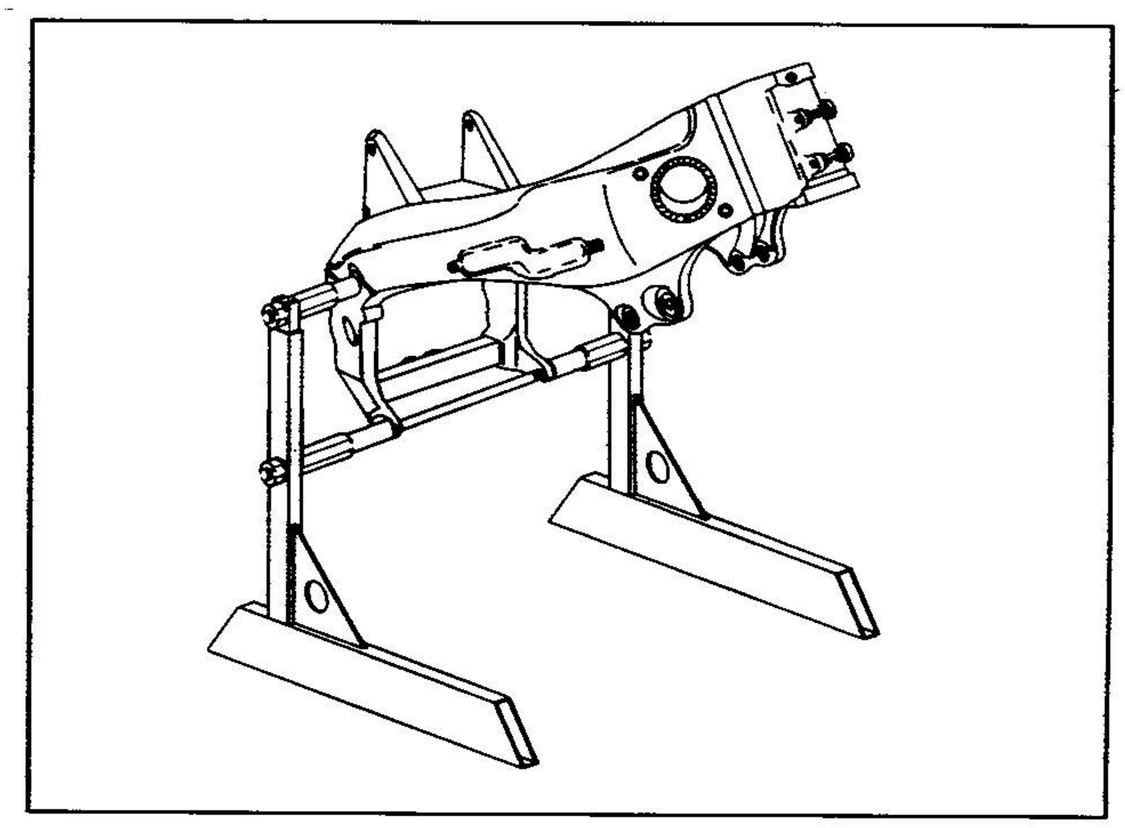

1.16 INSTRUCTIONS FOR APPLYING THE TRANSFERS

When removing parts from the frame:

⚠ WARNING

Handle all plastic and painted components with care to avoid scraping or scratching them.
Work very carefully.
Do not damage the tabs and/or slots into which they are fitted.

When applying the transfers, carefully follow the instructions given below.

We recommend using the following tools:
- relatively stiff spatula (1);

NOTE Generally speaking, soft squeegee-type spatulas do not remove enough water from under the transfers.
- sponge or spray bottle (2) with water.

NOTE Add a bit of detergent (1-3%) to the water, and shake to create bubbles.

Proceed as follows to apply a transfer:

- Place the transfer (3) upside-down on a work surface.
- Keeping the transfer spread flat on the work surface, remove the backing paper (4) completely.

NOTE We recommend using a spray bottle (2).
If using a sponge, sponge the surface without pressing, to keep from ruining the glue.

- Wet the surface of the adhesive with soapy water.
- Apply the transfer (3) to the surface to be decorated and move it to the desired position.

NOTE Always move the spatula in even strokes, from the center of the transfer out.

- Using the spatula (1), press down fairly hard and move the spatula across the surface of the transfer until all excess soap and water has been removed from underneath.

NOTE Do not lift the corners and/or sides of the transfer.

- Use an absorbent cloth and, working from the center out, dry the transfer.
- Move the spatula over the transfer again with firm, even strokes, pressing down as hard as possible. Move the spatula in strokes from the center out, being especially careful at the corners and sides, to ensure that the entire surface adheres evenly.

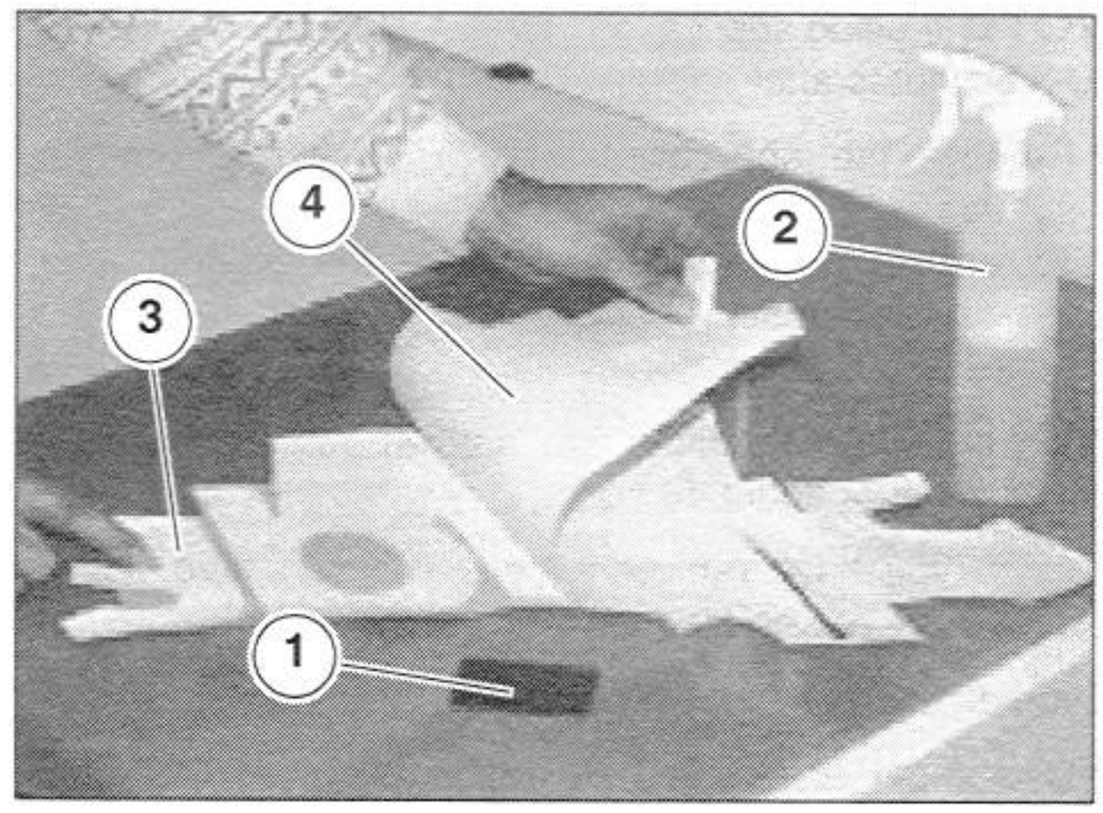

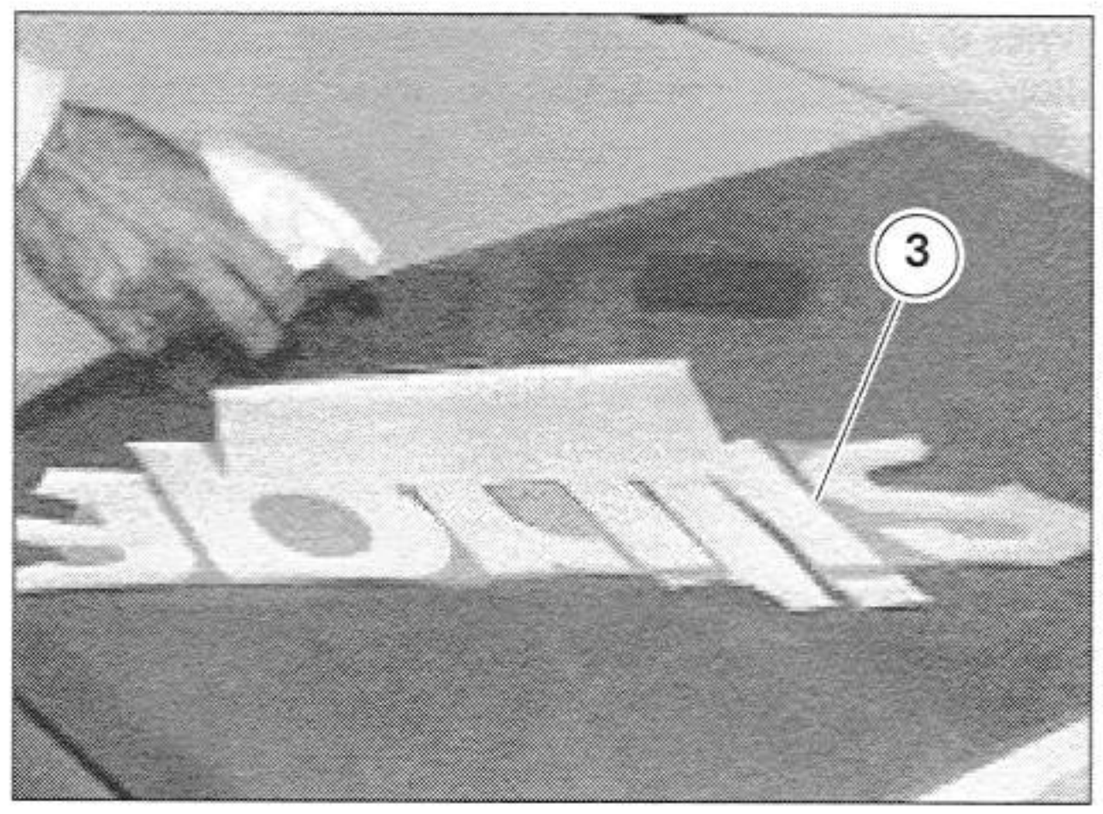

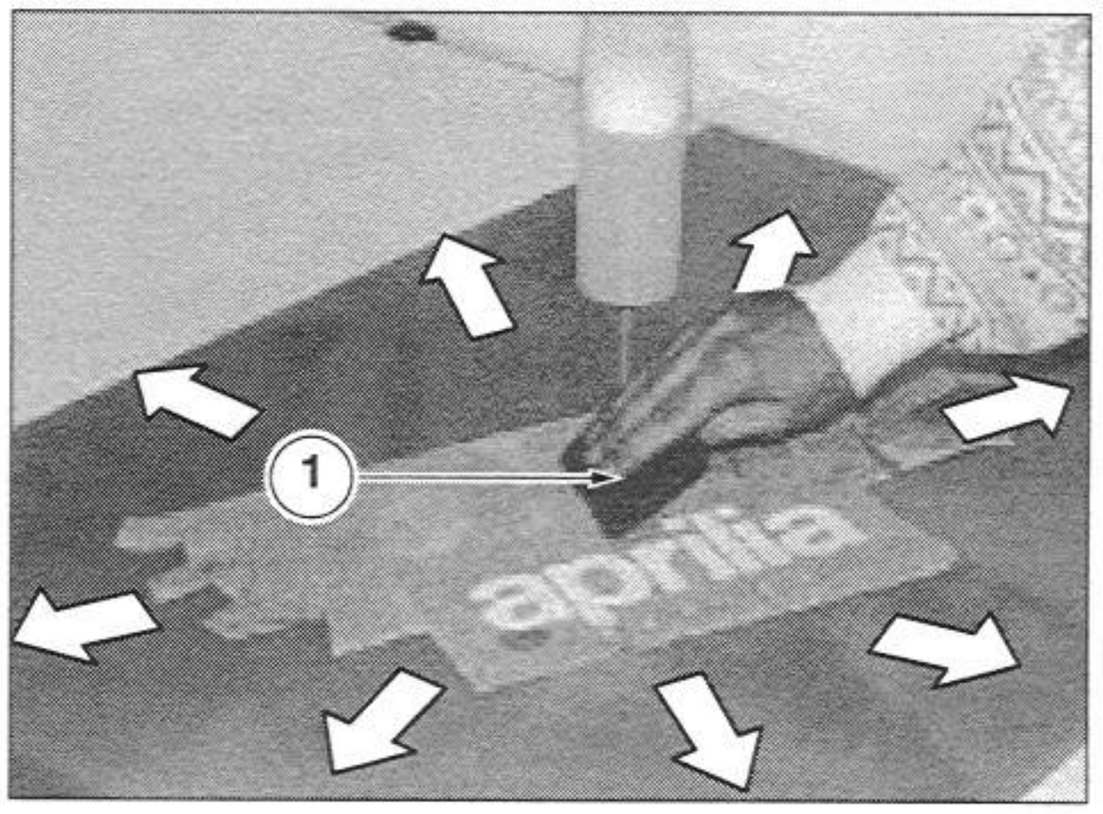

NOTE If using application tape (5)*, it must be removed 20-30 minutes after applying the transfer.

- Remove the application tape (5) from the transfer surface.
- To ensure good adhesion, move the spatula over the transfer again, concentrating in particular on the edges and corners.

NOTE When transfers are applied wet, the glue is not fully set for about 48 hours.

- Once you have removed the application tape, make sure there are no air bubbles on the surface.

If you do find surface air bubbles:

- Use a pin or hobby knife (6) to puncture the edge (7) of the air bubble.
- With the spatula (1), start from the side opposite the hole and scrape the bubble to allow any remaining air to escape.

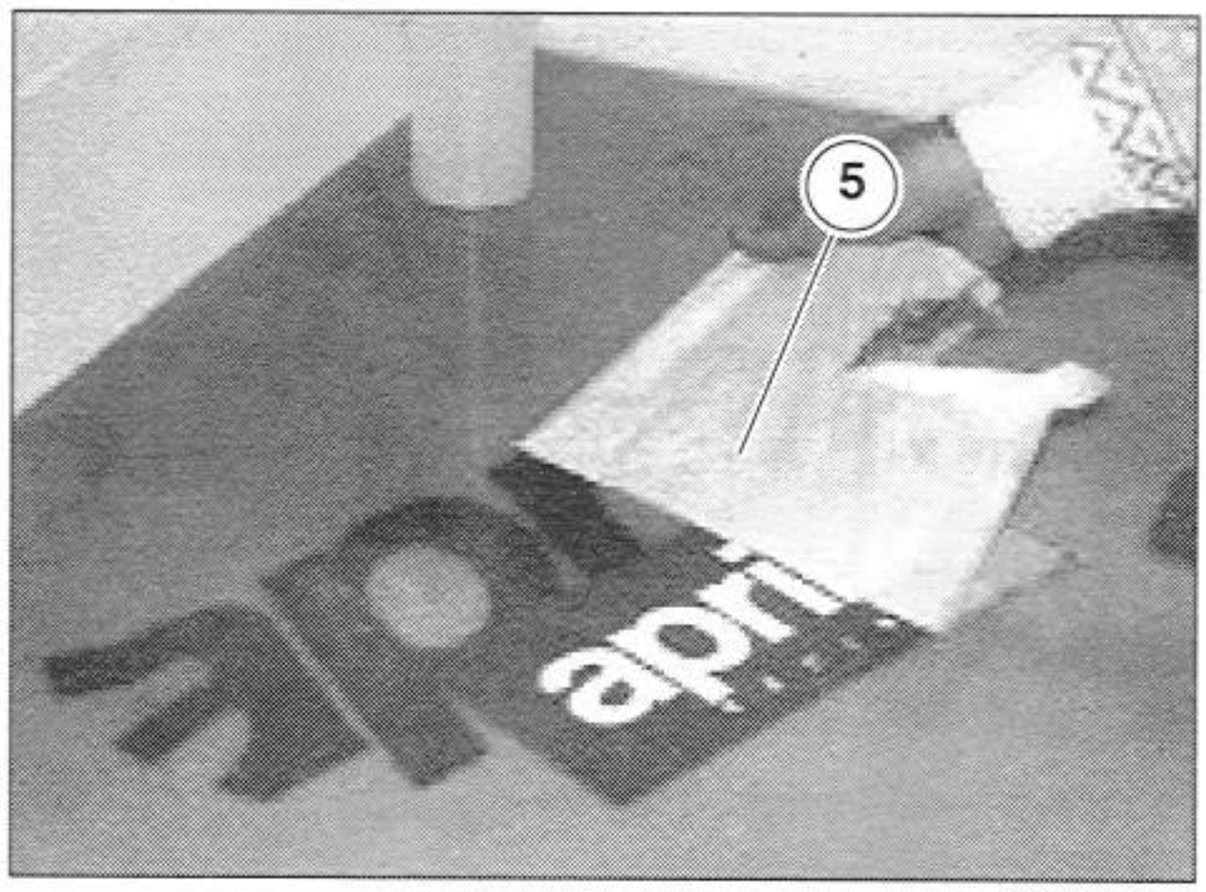

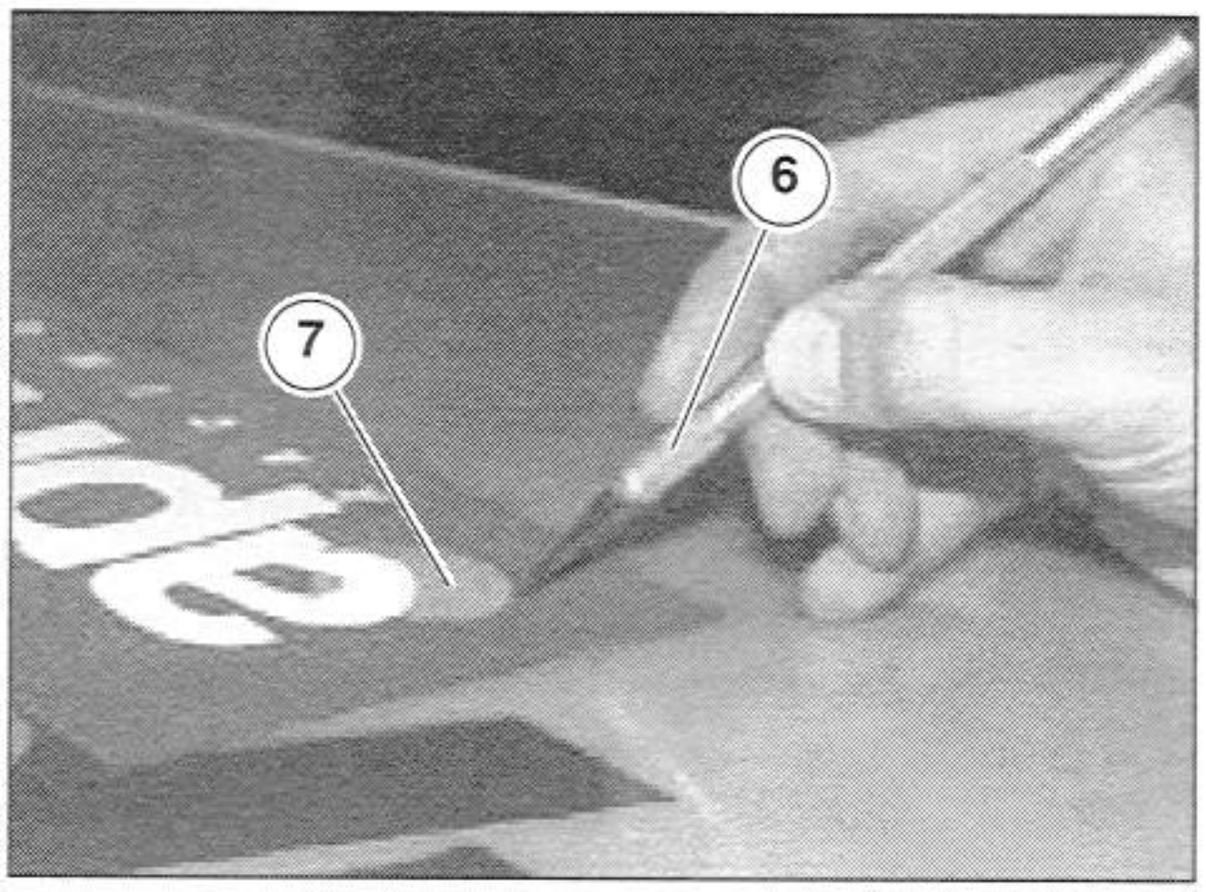

Application tape is used to facilitate the application of trademarks and letters, arranging them as desired on the surface to be decorated, and to add extra firmness to the adhesive backing during application.

1.17 FASTENERS

Carefully read 1.3.1

1.17.1 JOINTS WITH CLICK CLAMPS AND WITH SCREW-TYPE CLAMPS

⚠ WARNING

Remove ONLY the clamps indicated in the maintenance procedures.
The following text does not authorize the arbitrary removal of the clamps present on the vehicle.

⚠ DANGER

Before removing a clamp, make sure that the removal does not cause any fluid leakage; if so, have appropriate plugs to prevent such leakage on hand, and protect the other parts of the motorcycle which might come in contact with spilled fluid.

CLICK CLAMPS

Plain pliers are acceptable for removal, but a special installation tool is required.

These clamps are destroyed upon removal, so new ones must be used upon reinstallation.

NOTE Have the appropriate special tool OPT available: - **aprilia** part #0277295 (click clamp installation pliers).

⚠ WARNING

Upon installation, replace the click clamp that has been removed with a new click clamp having the same dimensions, see 0.4.2 (SPARE PARTS CATALOGUES).

Do not attempt to reinstall the removed click clamp, since it is unusable.
Do not replace the removed click clamp with a screw-type clamp or with other types of clamps.

⚠ WARNING

Proceed with care, in order not to damage the joint components.

- Using pliers on the head of the click clamp, squeeze it until it releases.

SCREW-TYPE CLAMPS

A screwdriver is used to remove and install screw type clamps. These clamps are reusable.

⚠ WARNING

Check the conditions of the screw-type clamp and if necessary replace it with a new screw-type clamp of the same dimensions, see 0.4.2 (SPARE PARTS CATALOGUES).

1.17.2 GENERAL VALUES OF TIGHTENING TORQUES

The following table shows tightening torques for screws and bolts with metric ISO threads, as is used in this vehicle. These are general values to be used if no specific value is given in this manual or other **aprilia** service literature.

Screw or bolt thread	Wrench	Tightening torque	
		ftlb	Nm
M 6	10	4.34	6
M 8	12	10.84	15
M 10	14	21.70	30
M 12	17	39.79	55
M 14	19	61.49	85
M 16	22	94.03	130

For specific fasteners, see 2.41 (FASTENERS). If not otherwise indicated, the tightening torques shown should be used for clean and dry threads, at room temperature.

NOTE To avoid damage to the threads, tighten screws and bolts as follows:

- Run up the fasteners finger tight.
- Applying half the prescribed tightening torque, tighten the fasteners that are diametrically opposite each other: (A) and (B); (C) and (D).
- Repeat, applying the prescribed tightening torque.

NOTE In this way the pressure exerted by the fasteners will be uniformly distributed across the joint surface.

Steel/aluminum fastening screw with similar coefficent of elasticity:

Screw	ftlb	Nm
M4	2.2	3
M5	4.4	6
M6	8.7	12
M8	18	25
M10	36	50
M12	58	80

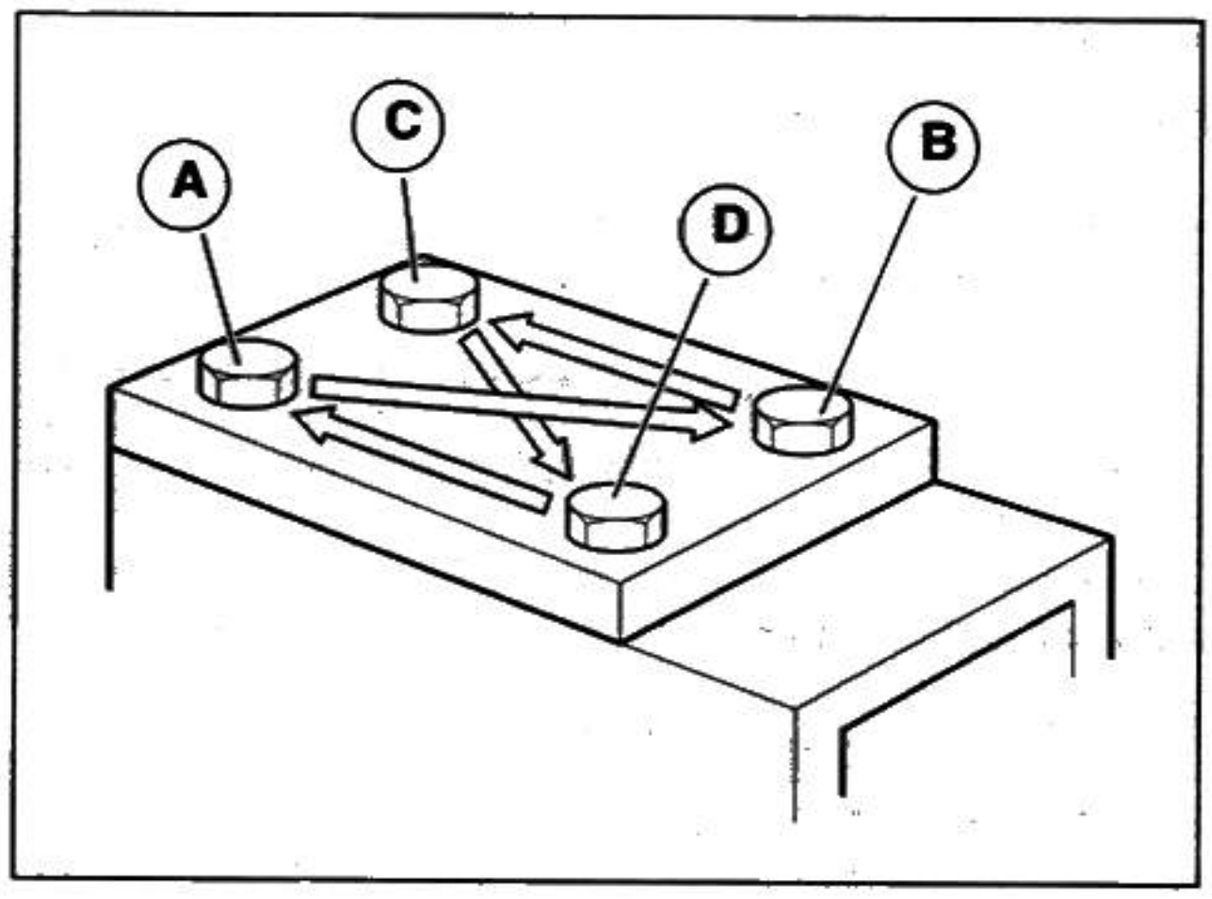

NOTE

NOTE

SCHEDULED MAINTENANCE AND TUNING OPERATIONS

2

SCHEDULED MAINTENANCE AND TUNING OPERATIONS

TABLE OF CONTENTS

2.1 SCHEDULED MAINTENANCE PLAN 2-4-00
2.1.1 SCHEDULED MAINTENANCE CHART 2-5-00
2.2 LUBRICATION POINTS 2-7-00
2.3 MULTIFUNCTION COMPUTER 2-8-00
2.3.1 LEGEND 2-8-00
2.3.2 PROGRAMMING KEYS 2-8-00
2.3.3 ADJUSTING THE DASHBOARD LIGHTS 2-8-00
2.3.4 TOTAL/TRIP ODOMETER (MILEAGE COUNTER) SWITCHING 2-9-00
2.3.5 SWITCHING BETWEEN KM/MI, L/GAL, °C/°F 2-9-00
2.3.6 SWITCHING THE FUEL LEVEL/AIR TEMPERATURE INDICATOR 2-9-00
2.3.7 SETTING THE CLOCK (HOURS AND MINUTES) 2-10-00
2.3.8 TABLE OF INSTRUMENTS AND INDICATORS 2-10-00
2.4 BATTERY 2-13-00
2.4.1 CHECKING AND CLEANING THE TERMINALS 2-14-00
2.4.2 RECHARGING THE BATTERY 2-15-00
2.4.3 EXTENDED BATTERY STORAGE 2-15-00
2.5 ELECTRICAL COMPONENTS 2-15-00
2.6 JUMP-STARTING 2-16-00
2.7 SPARK PLUGS 2-17-00
2.8 LIFTING THE FUEL TANK 2-19-00
2.9 DRAINING FUEL FROM THE TANK 2-20-00
2.10 AIR FILTER 2-21-00
2.11 THROTTLE 2-22-00
2.11.1 CHECKING THE OPERATION OF THE THROTTLE CONTROL 2-22-00
2.11.2 ADJUSTING THE IDLE SPEED 2-22-00
2.11.3 ADJUSTING THE THROTTLE CONTROL 2-23-00
2.12 CHECKING AND TOPPING UP THE ENGINE OIL LEVEL 2-24-00
2.13 CHANGING THE ENGINE OIL AND OIL FILTER 2-25-00
2.14 CHECKING AND TOPPING UP THE COOLANT 2-27-00
2.15 CHANGING THE COOLANT 2-28-00
2.16 CHECKING AND TOPPING UP THE FRONT BRAKE FLUID 2-29-00
2.17 CHECKING AND TOPPING UP THE REAR BRAKE FLUID 2-30-00
2.18 CHECKING AND TOPPING UP THE CLUTCH FLUID 2-32-00
2.19 BLEEDING THE BRAKE SYSTEMS 2-34-00
2.20 CLUTCH CONTROL SYSTEM BLEEDING 2-38-00
2.21 CHANGING THE FRONT BRAKE FLUID 2-39-00
2.22 CHANGING THE REAR BRAKE FLUID 2-40-00
2.23 CHANGING THE CLUTCH FLUID .. 2-41-00
2.24 ADJUSTING FRONT BRAKE LEVER AND CLUTCH CONTROL LEVER ... 2-41-00
2.25 ADJUSTING THE CLEARANCE OF THE REAR BRAKE LEVER 2-42-00
2.26 ADJUSTING THE GEARSHIFT LEVER 2-42-00
2.27 CHECKING THE BRAKE PAD WEAR 2-43-00
2.28 STEERING 2-44-00
2.28.1 CHECKING THE BEARING PLAY 2-44-00
2.28.2 ADJUSTING THE BEARING PLAY 2-45-00
2.29 INSPECTING THE FRONT SUSPENSION 2-47-00
2.29.1 FRONT SUSPENSION 2-47-00
2.29.2 ADJUSTING THE FRONT FORK 2-48-00
2.30 SWINGING ARM 2-49-00
2.30.1 ADJUSTING THE SWINGING ARM 2-49-00
2.31 INSPECTING THE REAR SUSPENSION 2-50-00
2.31.1 REAR SUSPENSION 2-50-00
2.31.2 REAR SHOCK ABSORBER ADJUSTMENT 2-50-00
2.31.3 CHECKING THE REAR SUSPENSION LINKAGE 2-51-00
2.32 FRONT WHEEL 2-52-00
2.33 REAR WHEEL 2-52-00
2.34 EXHAUST MANIFOLD NUTS 2-53-00
2.35 DRIVE CHAIN 2-54-00
2.35.1 CHECKING THE PLAY 2-55-00
2.35.2 CHECKING THE WEAR OF THE CHAIN AND SPROCKETS 2-56-00
2.35.3 ADJUSTING THE DRIVE CHAIN 2-56-00
2.35.4 INSPECTING THE DRIVE CHAIN GUIDE PLATE 2-57-00
2.35.5 INSPECTING THE DRIVE CHAIN SHOE 2-57-00
2.36 TIRES 2-58-00
2.37 FUEL LINES 2-59-00
2.38 BRAKE AND CLUTCH CONTROL LINES 2-59-00

2.39 COOLING SYSTEM PIPES..... 2-59-*00*

2.40 TIGHTENING NUTS AND BOLTS.. 2-60-*00*

2.41 FASTENERS..... 2-61-*00*

2.41.1 CLEANING AND LUBRICATION..... 2-67-*00*

This section describes the procedures for carrying out scheduled maintenance on the main vehicle components.

⚠ DANGER

Before beginning any maintenance work or inspecting the vehicle, stop the engine and remove the ignition key. Wait for the engine and exhaust system to cool completely. If possible, use the appropriate equipment to raise the vehicle, on a solid, level floor.
Be especially careful around any parts of the engine and exhaust system that may still be warm, to avoid burns. There are no parts of this vehicle that are safe for human consumption, therefore avoid the temptation of holding parts in your mouth while you are working on the vehicle. Some of the parts and coatings used in the manufacture of this vehicle are noxious, some are downright toxic. Keep all parts of the vehicle out of your mouth at all times.

2.1 SCHEDULED MAINTENANCE PLAN

To keep the vehicle in top running condition, **aprilia** recommends that you observe the prescribed maintenance intervals for the various components.

⚠ WARNING

The message "SERVICE" (1) will appear on the right-hand display after the first 625 mi (1,000 km) and every 4687 mi (7,500 km) thereafter.
When this occurs, carry out the operations listed in the scheduled maintenance chart; if the vehicle is used competitively, perform these operations more often, see 2.1.1 (SCHEDULED MAINTENANCE CHART)

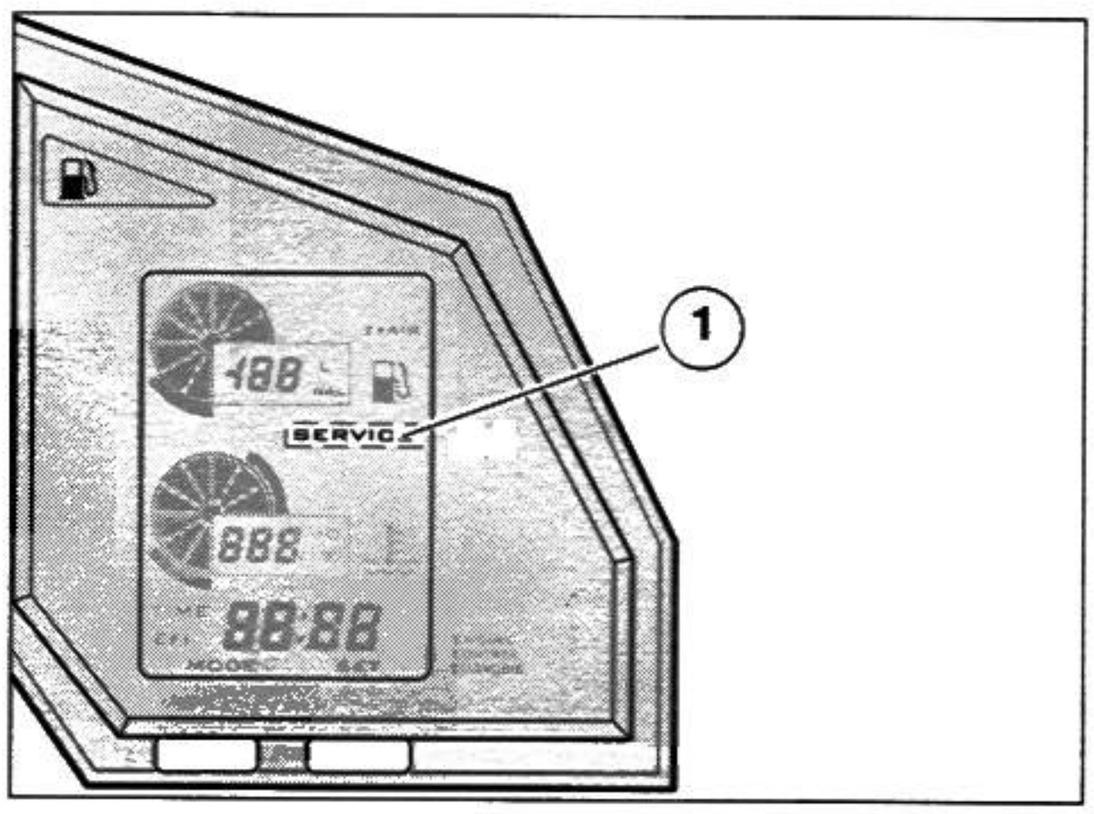

2.1.1 SCHEDULED MAINTENANCE CHART

Components	After break-in [625 mi (1000 km)]	Every 4687 mi (7500 km) or 12 months	Every 9375 mi (15000 km) or 24 months
Spark plugs		①(*)	③(*)
Side stand			
Throttle cables	①	①	
Rear suspension linkage bearings			①
Steering bearings and steering	①	①	
Wheel bearings		①	
Air filter		①	③
Engine oil filter	③(*)	③(*)	
Engine oil filter (on tank)	②		②
Fork	①		①
Light operation/direction		①	
Hardware clearance	R		④
Grease on throttle body pin	①	①	
Brake systems	①	①	
Cooling system		①	
Light system	①	①	
Safety switches	①	①	
Clutch fluid		①	
	every 2 years: ③		
Brake fluid		①	
	every 2 years: ③		
Coolant			①
	every 2 years: ③		
Fork oil	After the first 4687 mi (7500 km) and every 14000 mi (22500 km) thereafter: ③		
Engine oil	③	③(*)	
Brake pads	If worn: ③		
Pistons	every 3125 ml (5000 Km): ①(**)		
Tires	①	①	
Tire pressure	④	every 15 days:①	
Engine idle speed	④	④	
Tighten nuts and bolts	①	①	
Synchronize the cylinders	①	①	
Suspensions and riding position	①		①
Engine oil pressure LED	at every start-up:①		
Brake fluid bleeding	①		
Clutch fluid bleeding	①		

CONT'D ➤

Components	After break-in [625 mi (1000 km)]	Every 4687 mi (7500 km) or 12 months	Every 9375 mi (15000 km) or 24 months
Drive chain tension and lubrication	every 625 mi (1000 km): ①		
Battery terminals and clamps	①	①	
Fuel lines		①	every 4 years: ③
Final drive assembly (chain, sprocket countershaft sprocket		①	
Brake and clutch lines		①	every 4 years: ③
Cooling system lines		①	
Clutch wear		①(*)	
Brake pad wear	before every trip and every 1250 mi (2000 km): ①		

① = check and clean, adjust, lubricate or replace if necessary; ② = clean; ③ = replace; ④ = adjust.
Perform these maintenance operations more frequently if your vehicle is often used in rainy or very dusty conditions, on unpaved roads, or in any kind of competition.

( ) = OPERATIONS THAT MAY BE CARRIED OUT BY THE OWNER
(*) = For competitive use replace every 3750 km (2343 mi).
(**) = Only in case of: - intensive track/racing use.

2.2 LUBRICATION POINTS

Proper lubrication is essential for proper vehicle operation and long vehicle life.

NOTE Before lubricating, clean all parts thoroughly to remove any traces of rust, grease, dirt and dust.
Exposed parts that might rust must be protected using motor oil or grease, see 1.12 (LUBRICANT CHART).

The "LUBRICATION DIAGRAM" shows the lubrication points.

LUBRICATION DIAGRAM LEGEND

1) Steering bearings
2) Clutch lever pivot
3) Right rider foot rest pin
4) Left rider foot rest pivot
5) Left passenger foot rest pivot
6) Rear wheel axle and bearings
7) Drive chain
8) Rear suspension linkage
9) Side stand pivot
10) Right passenger foot rest pivot
11) Front wheel axle and bearings
12) Swinging arm pivot

■ = Grease
▲ = Oil

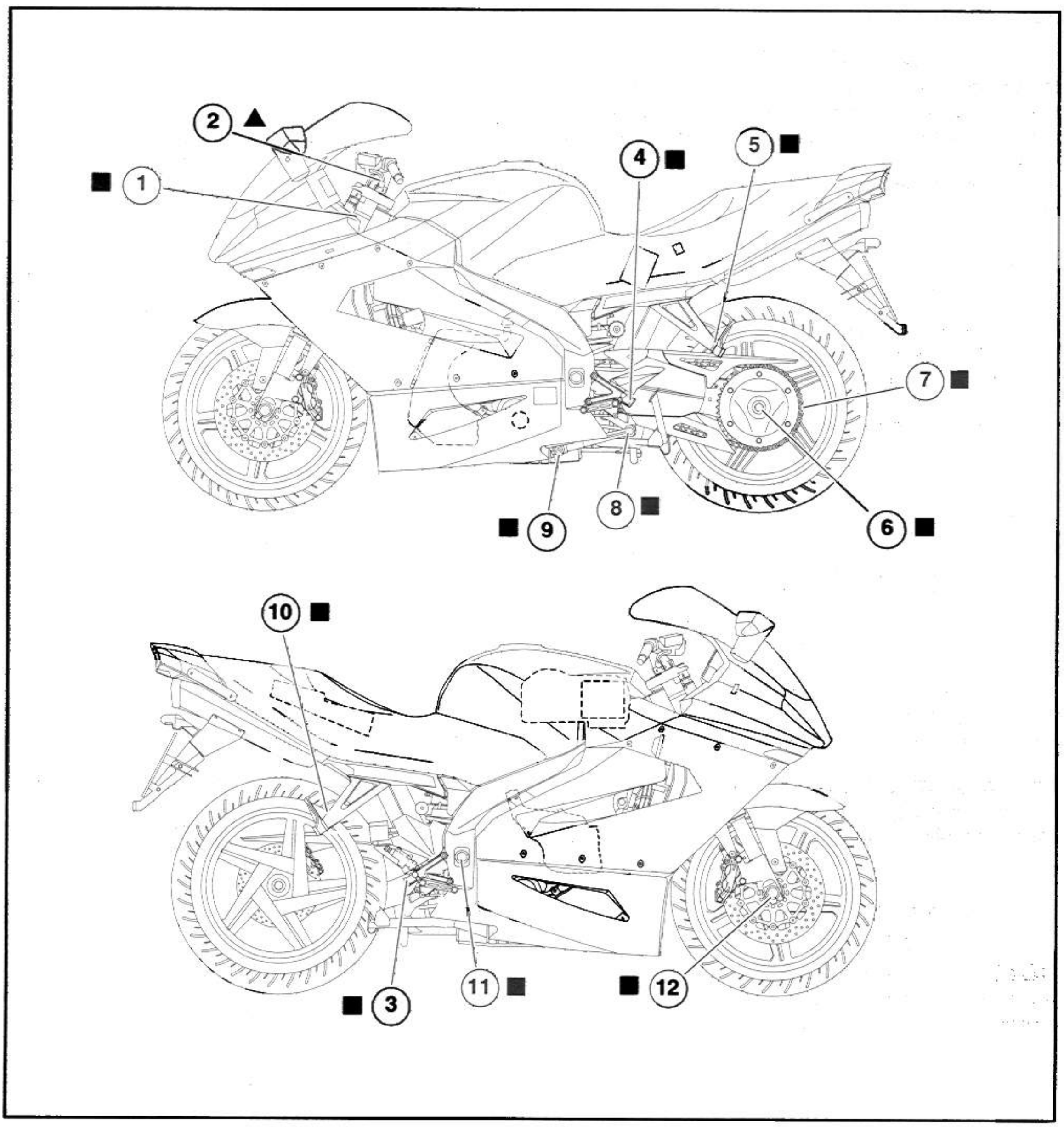

2.3 MULTIFUNCTION COMPUTER

2.3.1 LEGEND

A Left digital display (odometer- mileage counter)
B Right digital multifunction display (fuel level/air temperature - coolant temperature – clock/injection system error codes)
C SET and MODE programming keys.

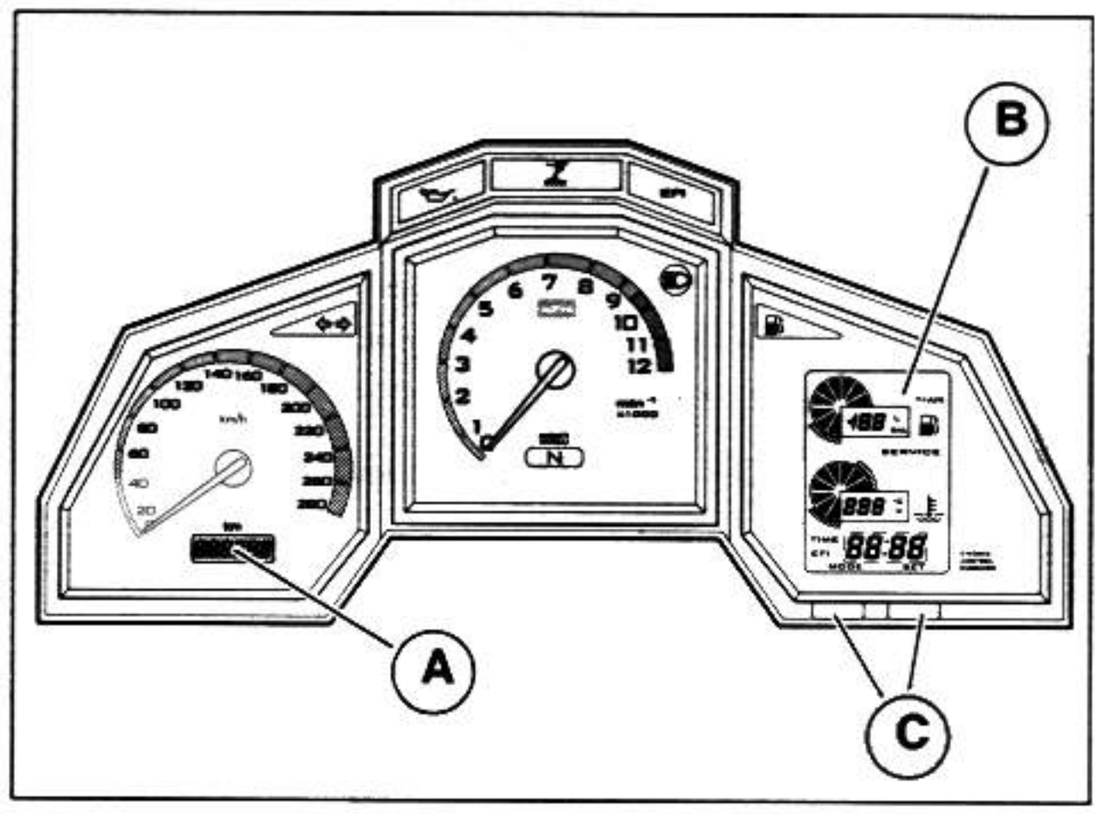

2.3.2 PROGRAMMING KEYS

⚠ WARNING

Do not attempt to program the computer while riding the motorcycle. This could lead to an upset with subsequent serious accident, serious injury or even death.

The operations described below should only be carried out with the vehicle stopped.
To do so while driving may lead to accidents.

NOTE All information below refers to operations to be carried out while the vehicle is shut off.

Within three seconds after turning the ignition key (1) to position "⊗", the following dashboard lights will come on:
- all LED warning lights;
- all backlit LEDs;
- all segments of the left display;
- all segments and messages on the right multifunction display;

This sequence of displays tests the proper operation of all LEDs, messages, sections and instruments.
After about three seconds have passed, on the dashboard only the engine oil pressure LED remains (2) (which will shut off only after the engine is started), and the following will appear on the display:
- total number of kilometers traveled (3);
- amount of fuel (4);
- coolant temperature (5) [up to 35° C (95° F) the symbol "---" is displayed];
- hour and minutes (6).

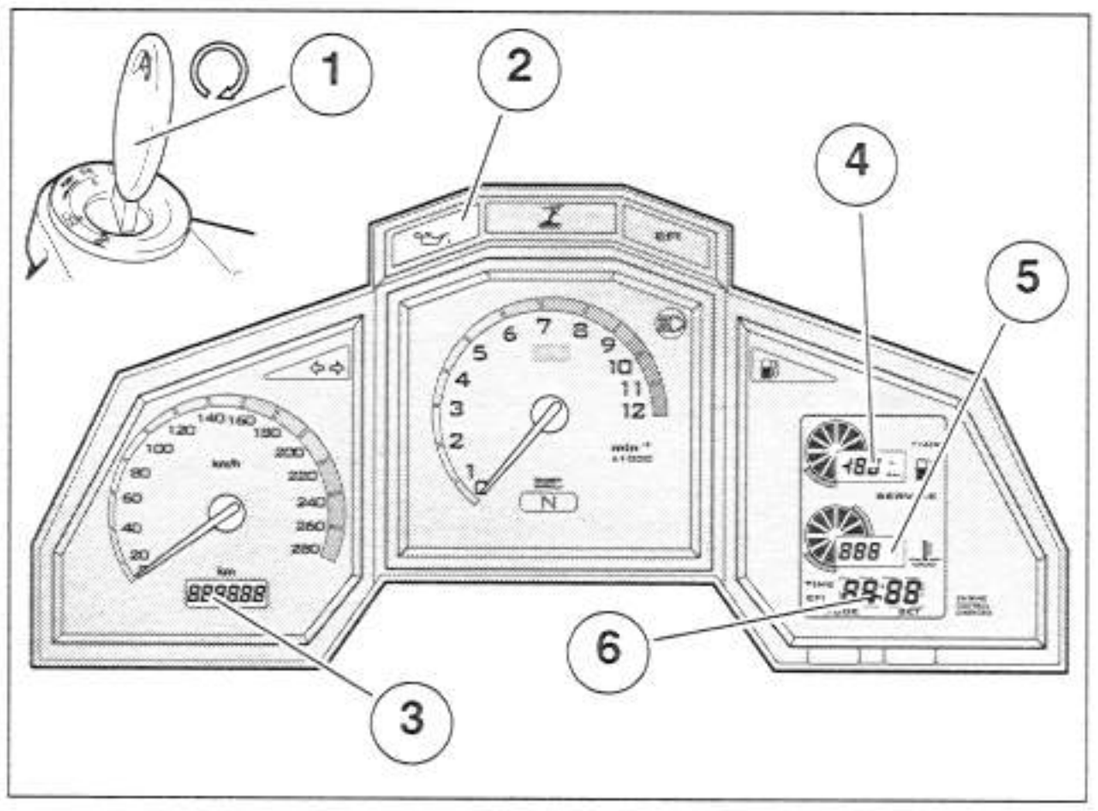

2.3.3 ADJUSTING THE DASHBOARD LIGHTS

You may select from among three different levels of dashboard light: 100%; 60%; 25%.

To adjust:

Set the light switch (1) to "";
Set to "" the light dimmer "-" (2).

NOTE Three seconds after the last selection, the **SET** key returns to total/trip odometer (mileage counter) switching mode.

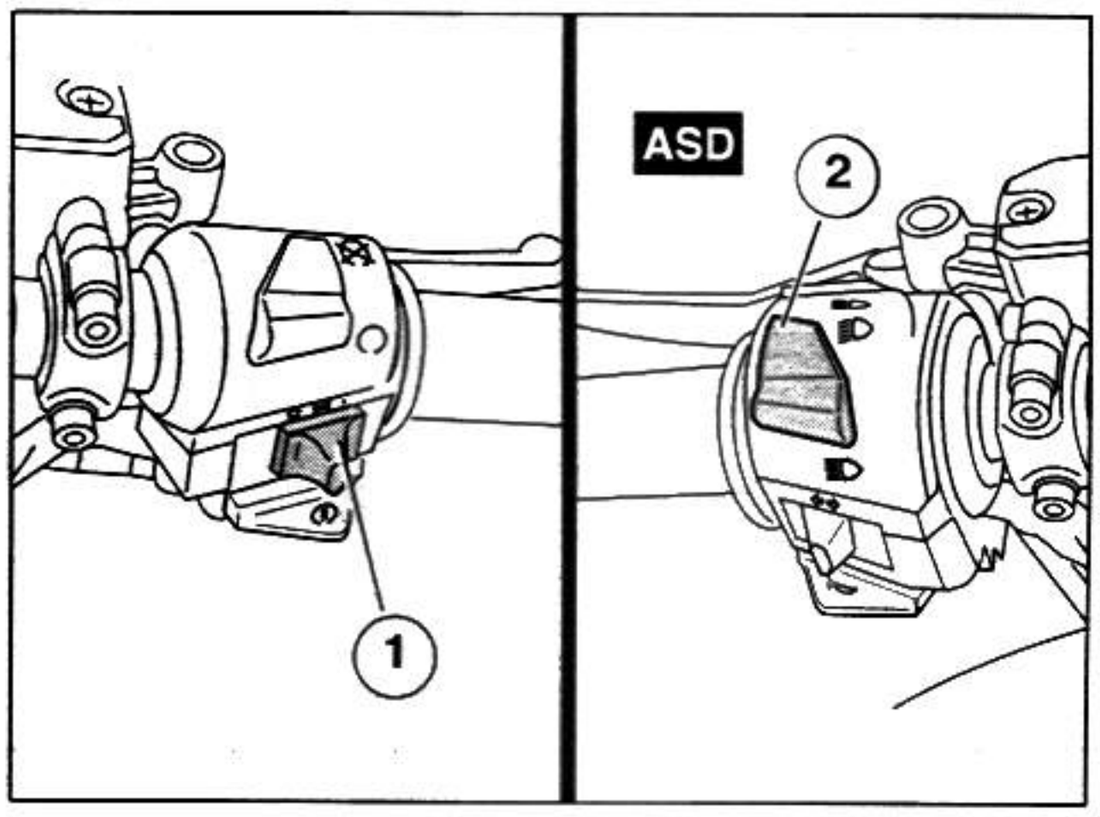

- Set the ignition switch to "⊗" and, within three seconds, press in sequence the **SET** key (3) to obtain the three levels of lighting.
- Select the desired lighting.

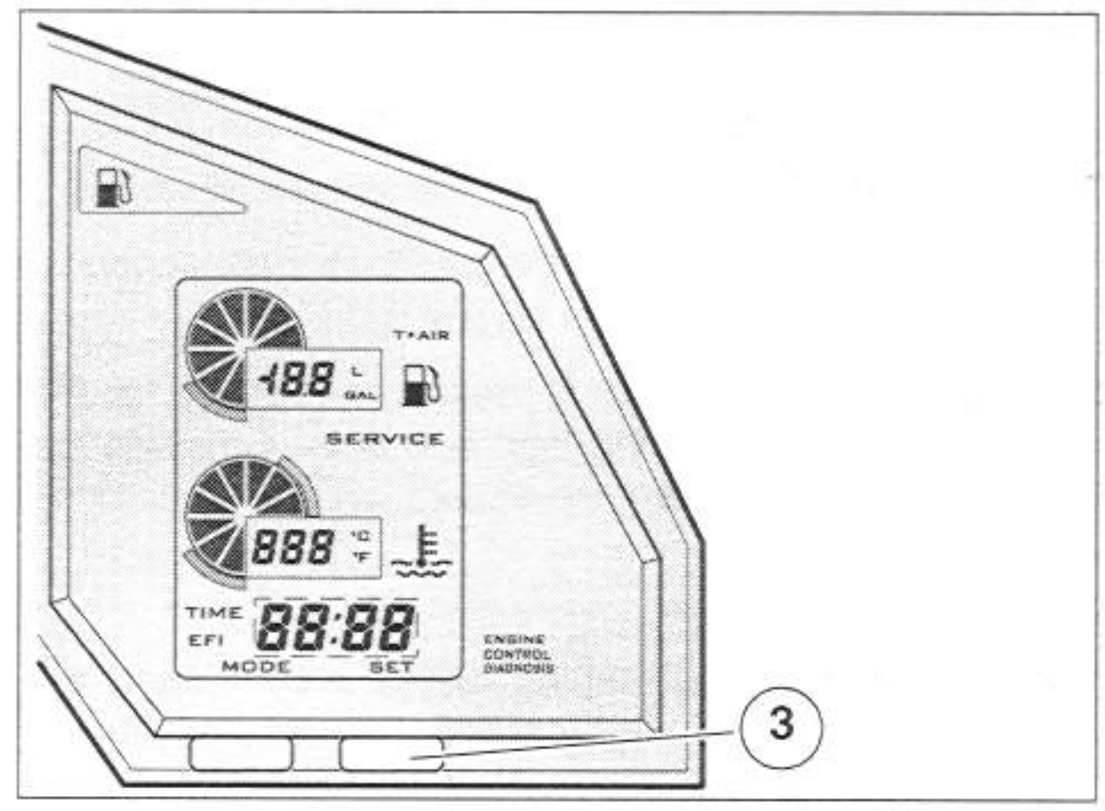

2.3.4 TOTAL/TRIP ODOMETER (MILEAGE COUNTER) SWITCHING

Left display

- Press and release the SET key (1); the corresponding total or trip kilometers (miles) traveled will appear on the display.

NOTE Each time the ignition switch is set to "⊗", the display will always show the total kilometers (miles).

To reset the trip odometer (mileage counter):

- Display the trip mileage.
- Press the SET key (1) for longer than three seconds; the segments (2) will be reset.

NOTE The trip kilometers are reset to zero if the battery is removed.

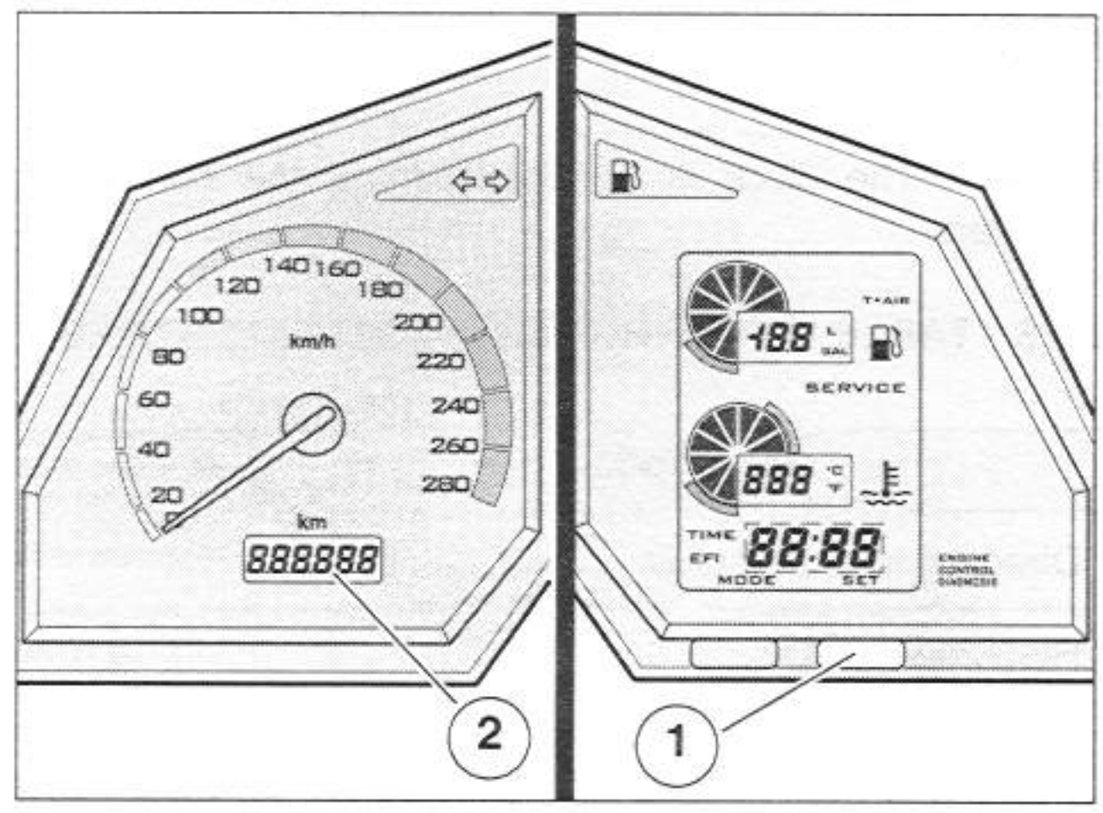

2.3.5 SWITCHING BETWEEN KM/MI, L/GAL, °C/°F

NOTE The km/mi, l/gal, °C/°F settings are set and locked by aprilia while manufacturing the vehicle, based on the country for which it is intended.
They cannot be changed later.

2.3.6 SWITCHING THE FUEL LEVEL/AIR TEMPERATURE INDICATOR

Right multifunction display

- Press and release the MODE key (1); the fuel level (2) or air temperature indicator (3) will appear on the display (numerical indication only).

NOTE Each time the ignition switch is set to "⊗", the display will always show the fuel level indicator (2).

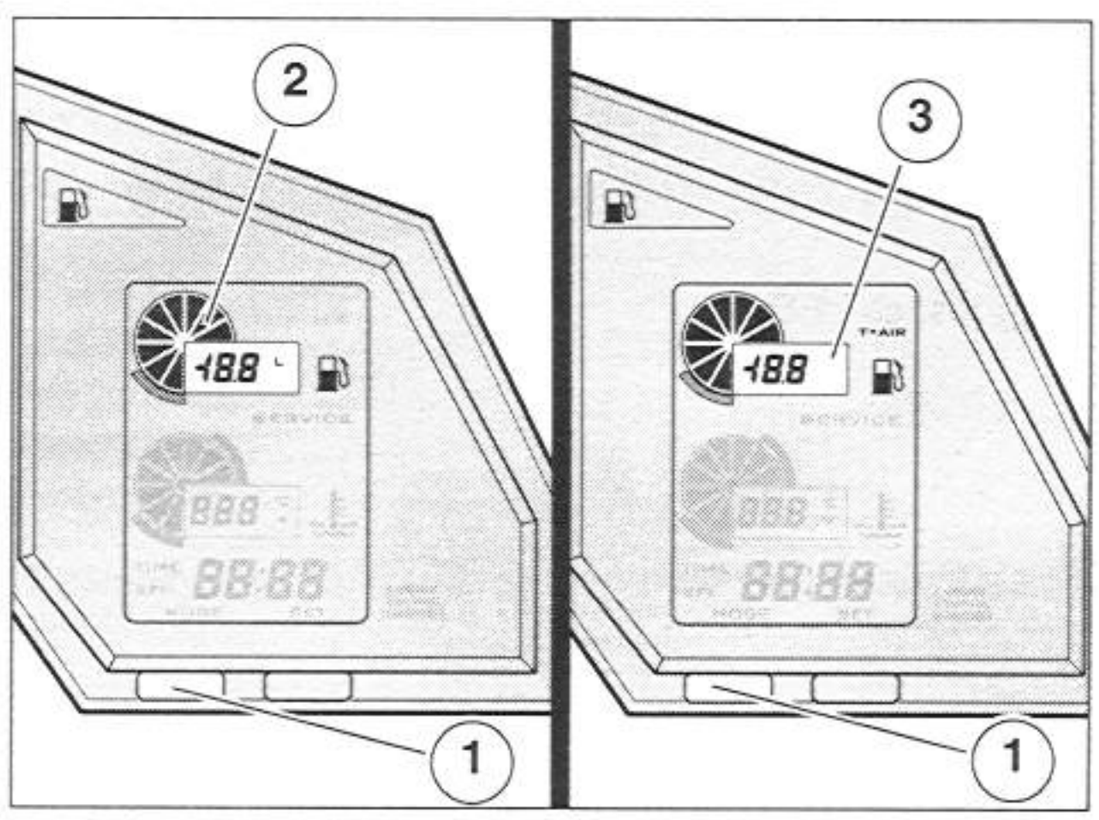

2.3.7 SETTING THE CLOCK (HOURS AND MINUTES)

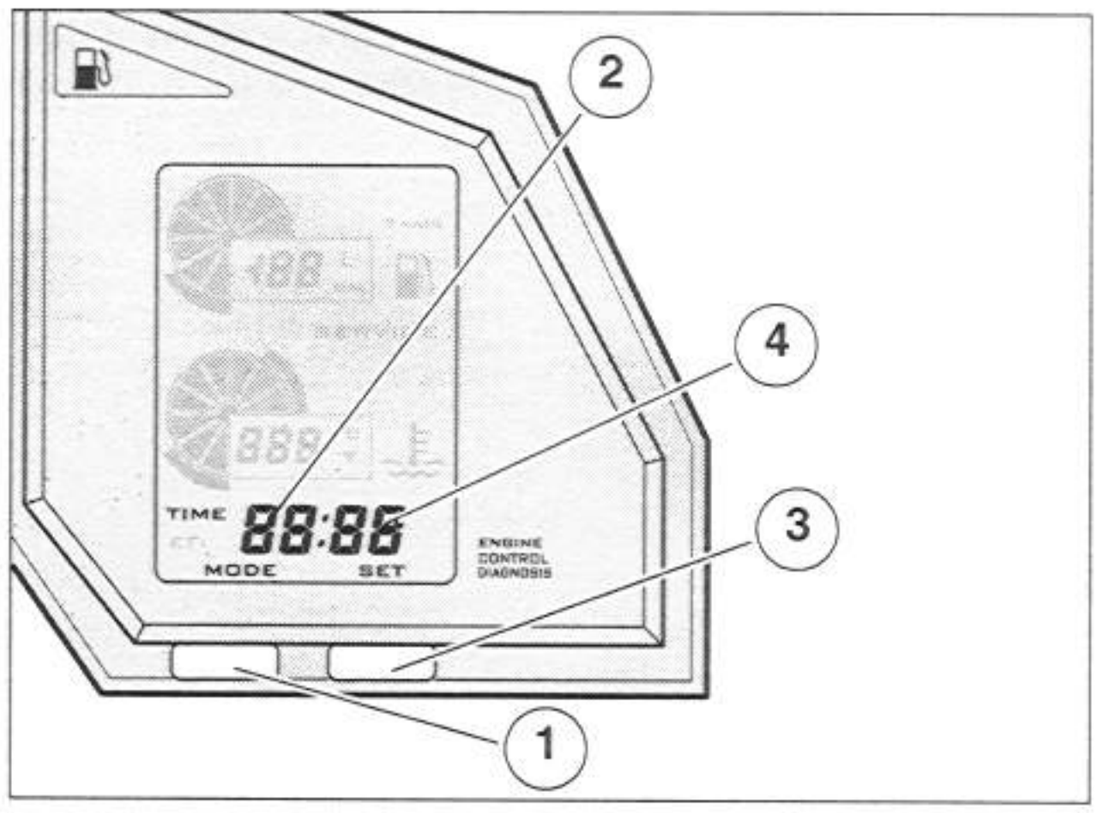

⚠ DANGER

The clock may be set only with the vehicle stopped.

- Press the MODE key (1) for longer than three seconds: the segments for the hours (2) will flash

NOTE If the SET key (3) is pressed and released, the change will take place one digit at a time; if instead the SET key (3) is held down, the figures will scroll quickly in a continuous cycle.

- Press the SET key (3) and select the hour.
- To confirm the hour setting, press and release the MODE key (1): the segments for the minutes (4) will flash.
- Press the SET key (3) and select the minutes.
- To confirm the minutes setting, press and release the MODE key (1).

NOTE The clock is reset to zero if the battery is removed.

2.3.8 TABLE OF INSTRUMENTS AND INDICATORS

Description	Function
Direction indicator LED	flashes when the turn signal is on.
High beam LED	Lights when the high beam headlight is turned on or flashed.
Tachometer (rpm)	Indicates the engine rpm. ⚠ WARNING **Do not exceed maximum RPM (red line).**
Fuel reserve LED	Lights when the fuel tank contains 1.05 ± 0.26 gal (4 ± 1 l) of fuel. **When this occurs, refuel as soon as possible.**
Side stand down LED	Lights when the side stand is lowered.
Engine oil pressure LED	Lights whenever the ignition switch is set to "⊗" and the engine is not running, to perform a lamp test. ⚠ WARNING **If the engine oil pressure LED " " remains on after starting the engine or comes on while the engine is running at engine speeds above idle, oil pressure is insufficient. Immediately stop riding and stop the motor. Failure to observe this warning can lead to an engine seizure with subsequent wheel seizure, loss of control, a serious accident, serious injuries, and even death**
Neutral gear **N** indicator LED	Lights when the gearshift is set to neutral.
Diagnostics LED EFI	Lights for approximately three seconds whenever the ignition switch is set to "⊗", to perform a lamp test. ⚠ WARNING **If the "EFI" diagnostics LED flashes, either at start-up or during the normal engine operation, it means that the electronic control unit has detected some kind of error. In many cases the engine continues to run, with limited performance. The message "EFI" appears on the multifunction digital only during tests carried out by an Aprilia Dealer.**
Speedometer [mi (km/h)]	Indicates the vehicle speed

CONT'D ➤

Description		Function	
Digital display (left side)	Odometer / mileage counter (km - mi)	Displays the trip or total mileage traveled.	
Multifunction digital display (right side)	Fuel level indicator	Displays the level of fuel in the tank. The amount fuel is displayed on the analogue scale, with the value expressed in gallons (numerical indication). When the fuel tank is full, the scale is completely highlighted, and the numerical indication displays the message "F". As the fuel level falls, the scale highlighting and value in gallons decrease. When no segment of the scale is highlighted, the numerical indication flashes the message "--" and the fuel reserve LED flashes, meaning that the fuel tank contains less than 4 ± 1 l (approx. 1 gallon). **Refuel as soon as possible.** **NOTE** When no segment of the scale is highlighted, the numerical indication flashes "8.8" and the fuel reserve LED flashes. **⚠ WARNING** **Running out of fuel with your vehicle can cause loss of control with subsequent accident, upset and serious injury or even death. Never allow the fuel level in your motorcycle to become so low that you will run out of fuel.** **NOTE** Alternatively, the digital sector may be used to display the air temperature (T°AIR), while the analogue indicator is left inactive	To alternate displays see 2.3.2 (PROGRAM MING KEYS)
Multifunction digital display (right side)	Air temperature indicator **T°AIR**	**⚠ WARNING** **When the digital display flashes a temperature of less than or equal to 3°C, it is possible that ice might form on the road. Slow down, avoid abrupt braking, and be aware that if ice forms on the road, traction is greatly reduced. Failure to observe this warning can lead to loss of control with subsequent upset, serious injury and even death.** Regardless of the function displayed (fuel level or air temperature), when the air temperature is less than or equal to 3 °C (37.4 °F) the display flashes the temperature for ten seconds (even if the temperature has returned above 3 °C (37.4 °F) in the meantime). If the temperature remains below 3 °C (37.4 °F), the above procedure is repeated three times at five-minute intervals. **NOTE** After the ten seconds have elapsed, the display always returns to the previously displayed version (fuel level or air temperature).	To alternate displays see 2.3.2 (PROGRAM MING KEYS)

CONT'D ➤

Description		Function	
Multifunction digital display (right side)	Coolant temperature indicator (°C / °F)	Displays the temperature of the coolant in the engine, see 2.3.2 (PROGRAMMING KEYS). The temperature is displayed on the analogue scale, with the value expressed in °F (digital indicator). Up to 97 °F, the symbol "---" is displayed. **⚠ WARNING** **The cooling fan power switch is turned on and off independently of the ignition switch position. To lower the coolant temperature, the cooling fans also run with the engine off, and shut off automatically.** **If the maximum allowed temperature is exceeded (257 °F), the engine could suffer serious damage.** If a temperature of 241-257 °F is displayed and the the next-to-last scale segment flashes, stop the engine, wait for the cooling valves to shut off, and check the coolant level, see 2.15 (CHANGING THE COOLANT). If a temperature of 259-275 °F is displayed and the last two segments of the scale flash, stop the vehicle and let the engine idle for approximately two minutes, to allow coolant to circulate regularly within the system; then set the engine stop switch to "⊗" and check the coolant level, see 2.15 (CHANGING THE COOLANT). If the same conditions remain after the checking the coolant level on the dashboard, do not start the vehicle.	To alternate displays see 2.3.2 (PROGRAM MING KEYS)
	Maintenance indicator "service"	The message "SERVICE" will appear after the first 625 mi (1,000 km) and every 4600 mi (15,000 km) thereafter. Carry out the operations listed in the scheduled maintenance chart, see 2.1.1 (SCHEDULED MAINTENANCE CHART).	
	Clock	Displays the hours and minutes based on settings, see 2.3.2 (PROGRAMMING KEYS).	

2.4 BATTERY

Carefully read 1.3.9 (PRECAUTIONS AND GENERAL INFORMATION).

There are two kinds of commercially available batteries:
- batteries **requiring maintenance** featuring cell caps;
- **maintenance-free** batteries without cell caps. There is no need to check or top up the electrolyte level.

NOTE This vehicle is equipped with a sealed maintenance-free battery. It requires no maintenance beyond occasional inspections and recharging if needed.

Always replace the battery with one of the same type.
For more information, see 6.14 (BATTERY).

⚠ WARNING

Never reverse the battery cable connections. Connect and disconnect the battery with the ignition switch set to "⊗".
First connect the cable positive (+), then the negative (-) cable.
Disconnect in reverse order.

NOTE Use a portable tester to check the battery voltage. If voltage is less than 12V, the battery must be recharged.
If the battery voltage drops below 8V, the electronic control unit will prevent the engine from running.

2.4.1 CHECKING AND CLEANING THE TERMINALS

Carefully read 2.4 (BATTERY).

- Make sure the ignition switch is set to "⊗".
- Remove the saddle, see 7.1.1 (REMOVING THE SADDLE).
- Move the red rubber boot (1).
- Make sure that the battery cable terminals (2) (3) are:
- in good condition (not corroded or encrusted with deposits);
- covered with neutral grease or Vaseline.

If necessary:

- Disconnect the negative cable (-) and positive cable (+), in that order.
- Clean with a wire brush to remove any traces of corrosion.
- Connect the positive cable (+) and negative cable (-), in that order.
- Coat the terminals with neutral grease or Vaseline.
- Replace the saddle, see 7.1.1 (REMOVING THE SADDLE).

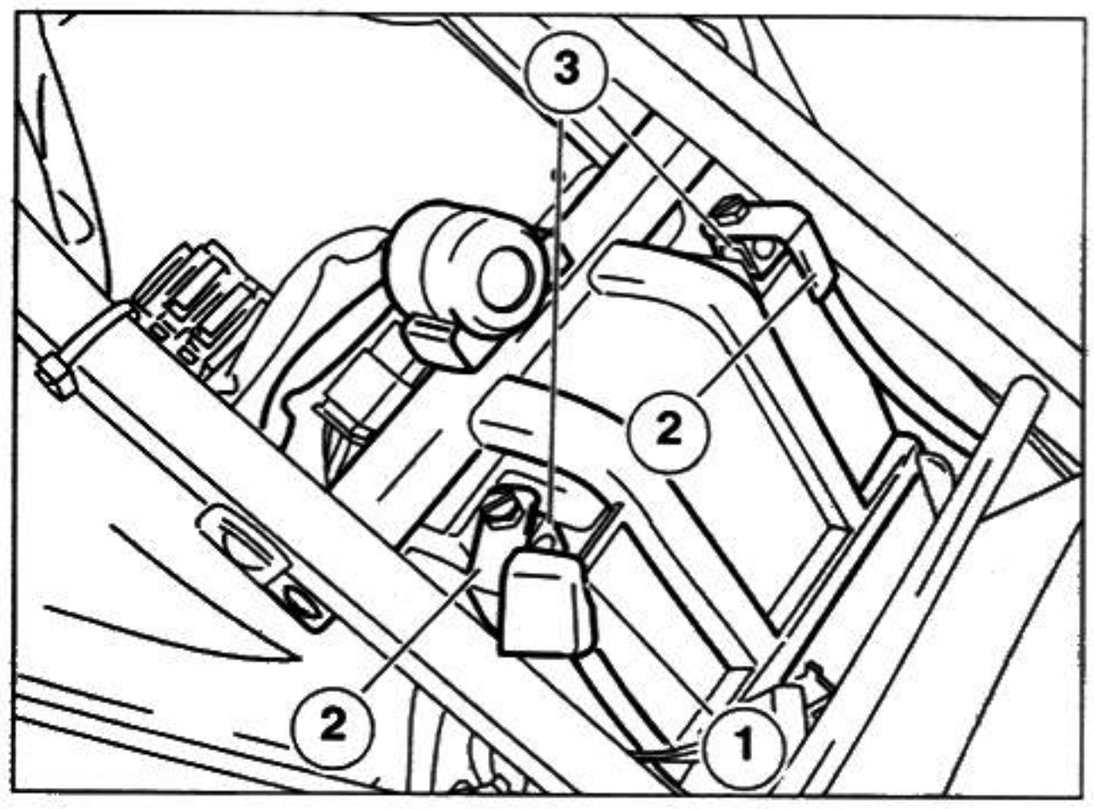

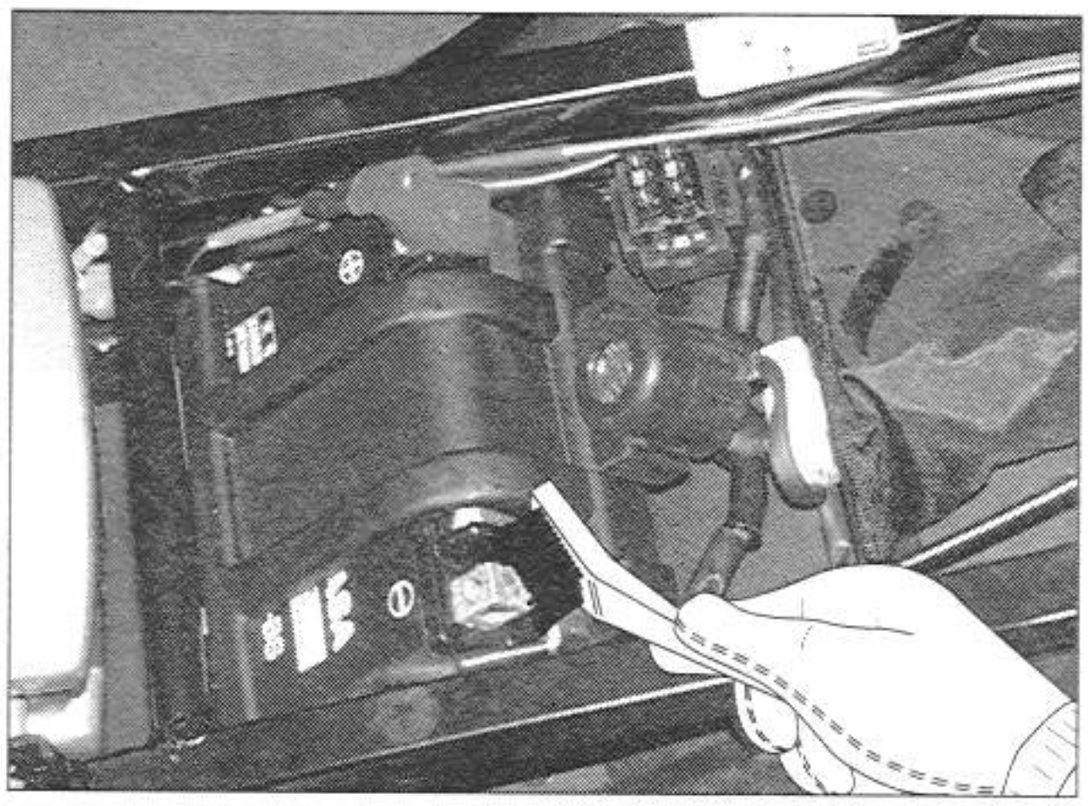

2.4.2 RECHARGING THE BATTERY

Carefully read 2.4 (BATTERY).

NOTE One symptom of a nearly dead battery is when you hear a vibrating noise from the starter relay, when the start button "⊗" is pressed.
Do not attempt to remove the battery caps; this could damage the battery.

- Remove the battery, see 7.1.9 (REMOVING THE BATTERY).
- Obtain a suitable battery charger.
- Prepare the battery charger for the type of recharging desired (see table).
- Connect the battery to a battery charger.

⚠ DANGER

Make sure the area is adequately ventilated during recharging or while running the engine; avoid inhaling the fumes emitted while recharging the battery.

- Switch on the battery charger.

Recharging	Voltage (Amperes)	Time (hours)
Normal	1.2	8 - 10
Fast	12	0.5

⚠ DANGER

Do not re-install the battery until 5/10 minutes after disconnecting from the charger, since the battery continues to produce fumes for a short time.

2.4.3 EXTENDED BATTERY STORAGE

Carefully read 2.4 (BATTERY).

⚠ WARNING

If this vehicle is not used for more than twenty days, disconnect the 30-A fuses. This will prevent the battery from running down due to the slight current consumption of the multifunction computer.
Removing the 30-A fuses will reset the functions: digital clock and red line setting.
To restore these functions, see 2.3 (MULTIFUNCTION COMPUTER).
If your vehicle remains unused for more than a couple of weeks, it will be necessary to recharge the battery, to avoid sulfur damage, see 2.4.2 (RECHARGING THE BATTERY).

- Remove the battery, see 7.1.9 (REMOVING THE BATTERY) and store it in a cool, dry place.

Over the winter, or whenever the vehicle remains unused, periodically check the battery charge (once a month or so), to prevent it from deteriorating.

- Recharge it completely using a normal charger, see 2.4.2 (RECHARGING THE BATTERY).

NOTE If the battery remains on the vehicle, disconnect the cables from the terminals.

2.5 ELECTRICAL COMPONENTS

Carefully read 1.3.9 (PRECAUTIONS AND GENERAL INFORMATION).

Check after the first 625 mi (1,000 km) and every 4687 mi (7,500 km) or every 8 months thereafter.

- Place the vehicle on the stand.
- Check to ensure that all lighting are working.
- Check the adjustment of the headlight beam, see 6.17 (ADJUSTING THE HEADLIGHT BEAM VERTICALLY). and 6.18 (ADJUSTING THE HEADLIGHT BEAM HORIZONTALLY).
- Make sure that all connectors are inserted properly.
- Make sure that all switches are correctly fastened and in proper working order:
  - see 6.8.5 (CHECKING THE SIDE STAND SWITCH);
  - see 6.8.7 (CHECKING THE SAFETY SYSTEM SWITCHES).
- Make sure that the air sensor and speedometer sensor are securely attached to their mounts.

⚠ DANGER

The sensing area of the sensors must always be kept clean. Any caked mud, dirt, etc. can affect their function.

2.6 JUMP-STARTING

Carefully read 2.4 (BATTERY).

⚠ DANGER

The vehicle should only be jump-started when the vehicle battery is partially or completely dead, and recharging is not possible.
Do not attempt to start the vehicle by pushing or towing it.
The vehicle providing the jump start must be equipped with a battery having the exact same rated voltage (as listed on the battery itself) as the battery of the vehicle to be started (12V).
Follow the procedure below to the letter so as to reduce the danger of the battery exploding and possibly injuring people and/or causing property damage. Failure to observe this warning will certainly damage the electrical components of both vehicles.

- Make sure the ignition switch is set to "⊗".
- Remove the saddle, see 7.1.1 (REMOVING THE SADDLE).

NOTE The battery cables of the vehicle to be started must not be disconnected.

⚠ WARNING

The terminals of one cable must never come into contact with those of the other.

- Pull back the red rubber boot (1).
- Connect the end of one jumper cable to the positive pole (+) of the battery on the on the vehicle providing assistance (A); the other end to the positive pole (+) of the battery on the vehicle to be started (B).
- Connect the end of the other jumper cable to the negative pole (-) of the battery on the vehicle providing aid (A); the other ends grounded on the frame (at a point far from battery) of the vehicle to be started (B).

DO NOT CONNECT TO THE NEGATIVE (-) POLE.

⚠ DANGER

The jumper cables must not be allowed near any moving parts on either vehicle.

NOTE The vehicle providing the jumpstart may keep its engine running during the starting phase.

- Starting the vehicle.

NOTE Attempts to start the vehicle should last for no more than ten seconds at a time, and be repeated if necessary at intervals of approximately one minute.
Once you have successfully jump-started the vehicle, keep both engines running for a couple of minutes.

- Stop both engines and disconnect the jumper cables, proceeding in reverse order.

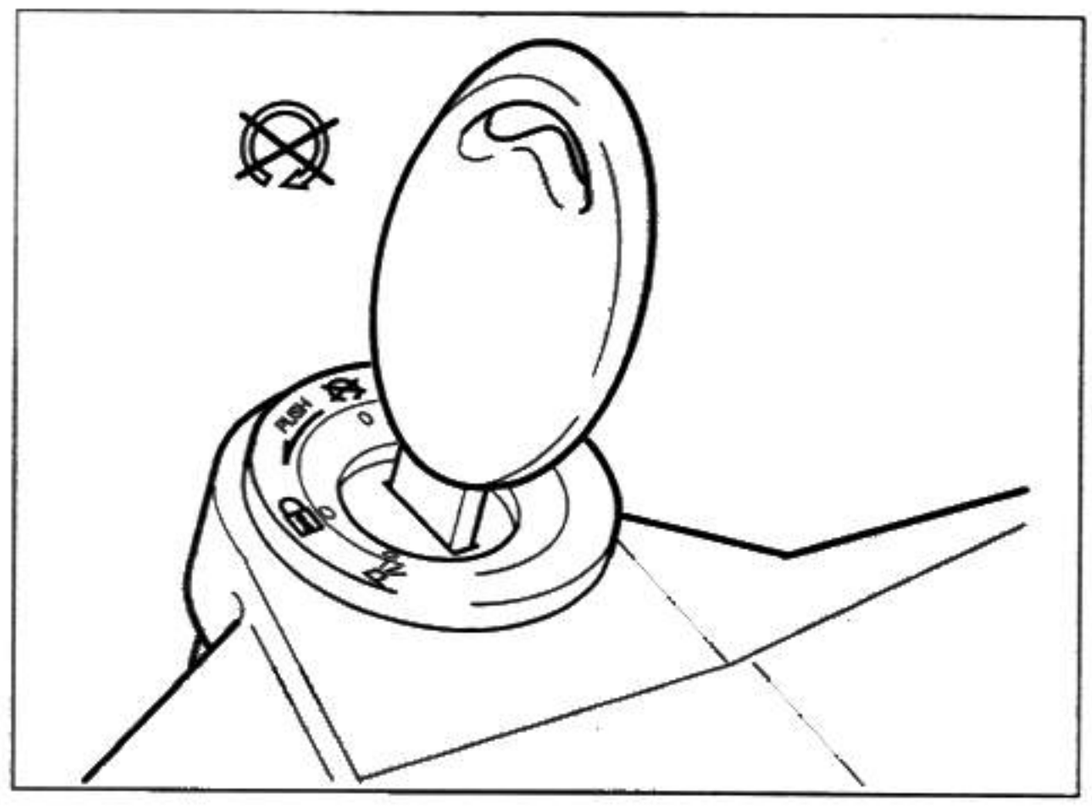

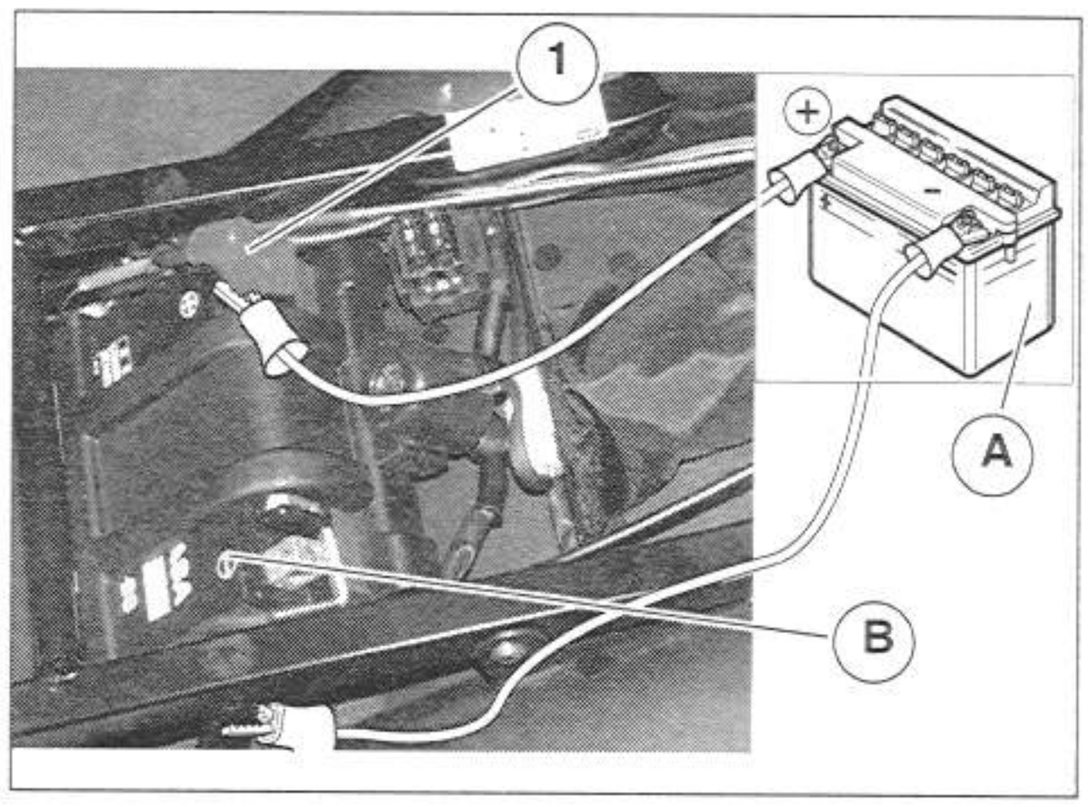

2.7 SPARK PLUGS

Carefully read 1.3.9 (PRECAUTIONS AND GENERAL INFORMATION).

Check the spark plugs every 4687 mi (7500 Km) or every 8 months; replace them every 9375 mi (15000 Km) or every 16 months.
Periodically remove the spark plugs, clean them to remove any carbon deposits, and replace if necessary.
For competitive use, replace the spark plugs every 4687 mi (7500 Km) .

To access the spark plugs:

⚠ DANGER

Let the engine cool down to ambient temperature.

- Raise the fuel tank, see 2.8 (LIFTING THE FUEL TANK).

NOTE The vehicle is equipped with two spark plugs per cylinder.
The following steps refer to a single spark plug, but are applicable to all.

To remove and clean:

⚠ DANGER

Never disconnect the spark plug cap while the engine is running, as you could receive a powerful electrical shock from the ignition system.

- Remove the spark plug cap (1).
- Remove all traces of dirt from the base of the spark plug.
- Place the special wrench supplied with the tool kit over the spark plug.
- Place the 13-mm open-end wrench supplied in the tool kit over the hexagonal seat of the special spark plug wrench.
- Unscrew the spark plug and remove it from its seat, being careful not to allow dust or other matter into the cylinder.

⚠ WARNING

This vehicle is fitted with spark plugs featuring platinum-type electrodes.
Never clean using metal brushes or abrasive products, only a blast of compressed air.

- center electrode (3);
- insulation (4);
- side electrode (5).

- Make sure that the spark plug electrodes and insulation show no carbon deposits or signs of corrosion. If necessary, clean using a blast of compressed air.

Replace the spark plug if the insulation is cracked, the electrodes are corroded, or the plug shows excessive deposits. If the center electrode (3) becomes rounded as shown in the figure, replace the spark plug.
Always replace spark plugs with new ones of the same standard.

Recommended spark plugs:
NGK R DCPR9E

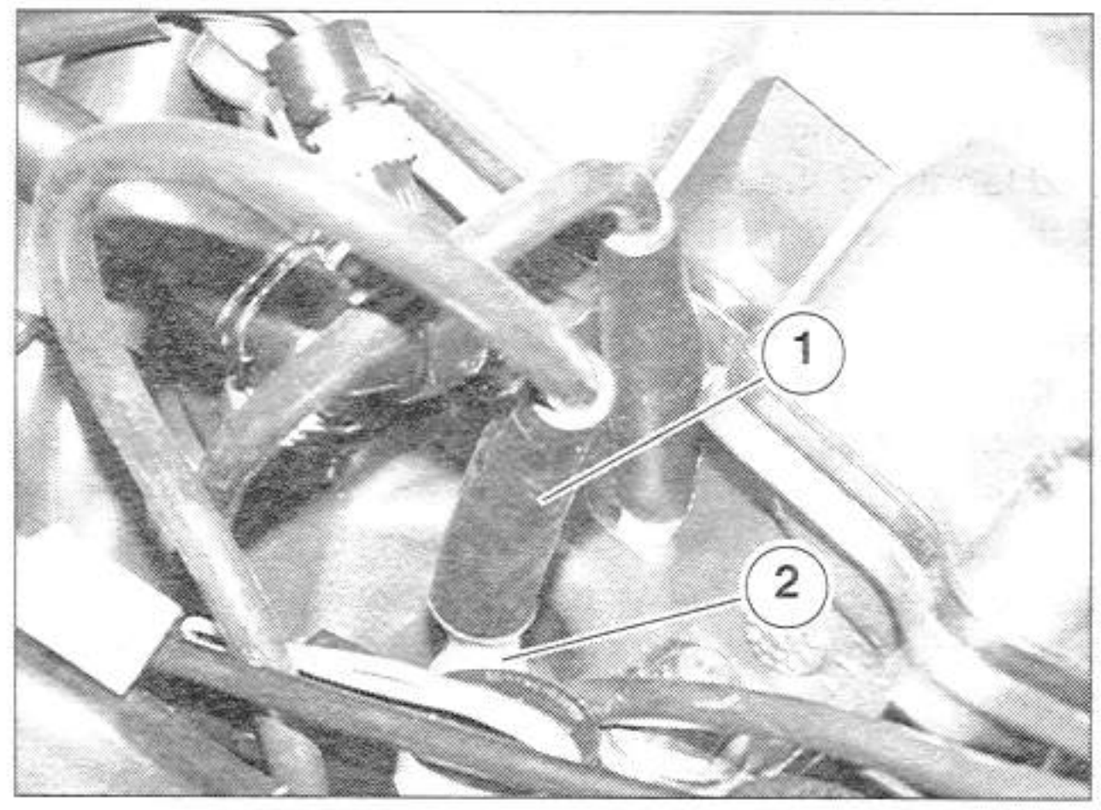

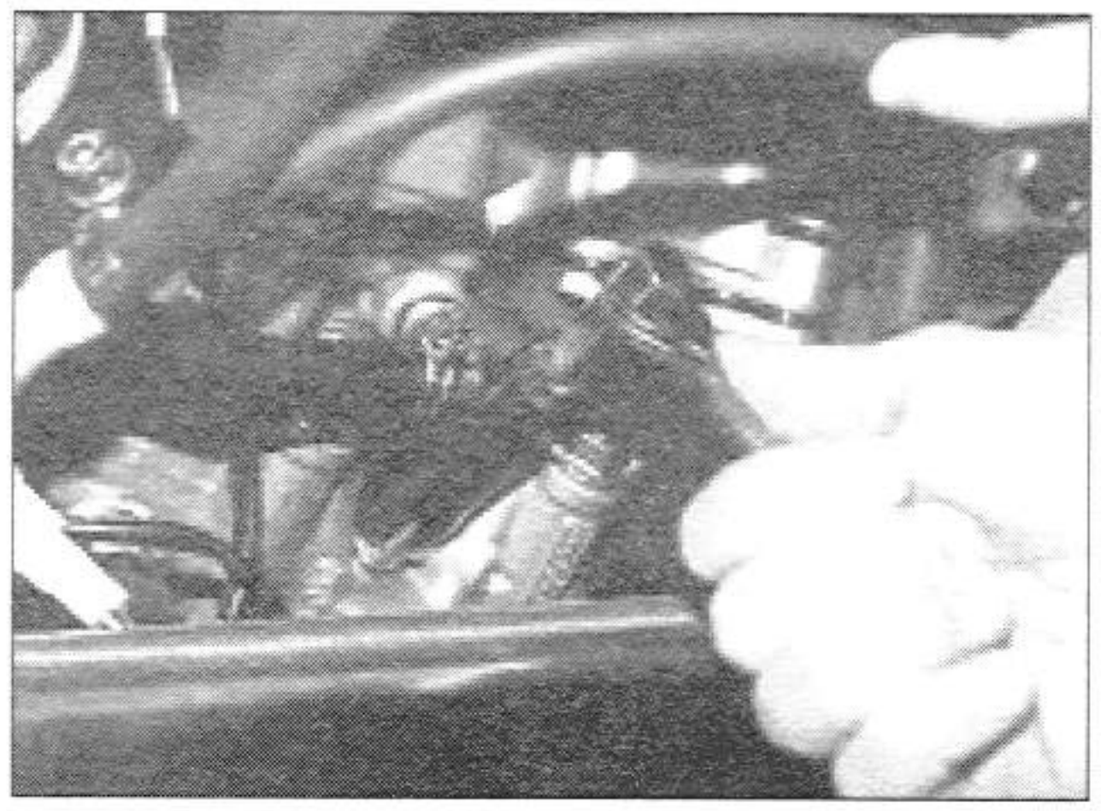

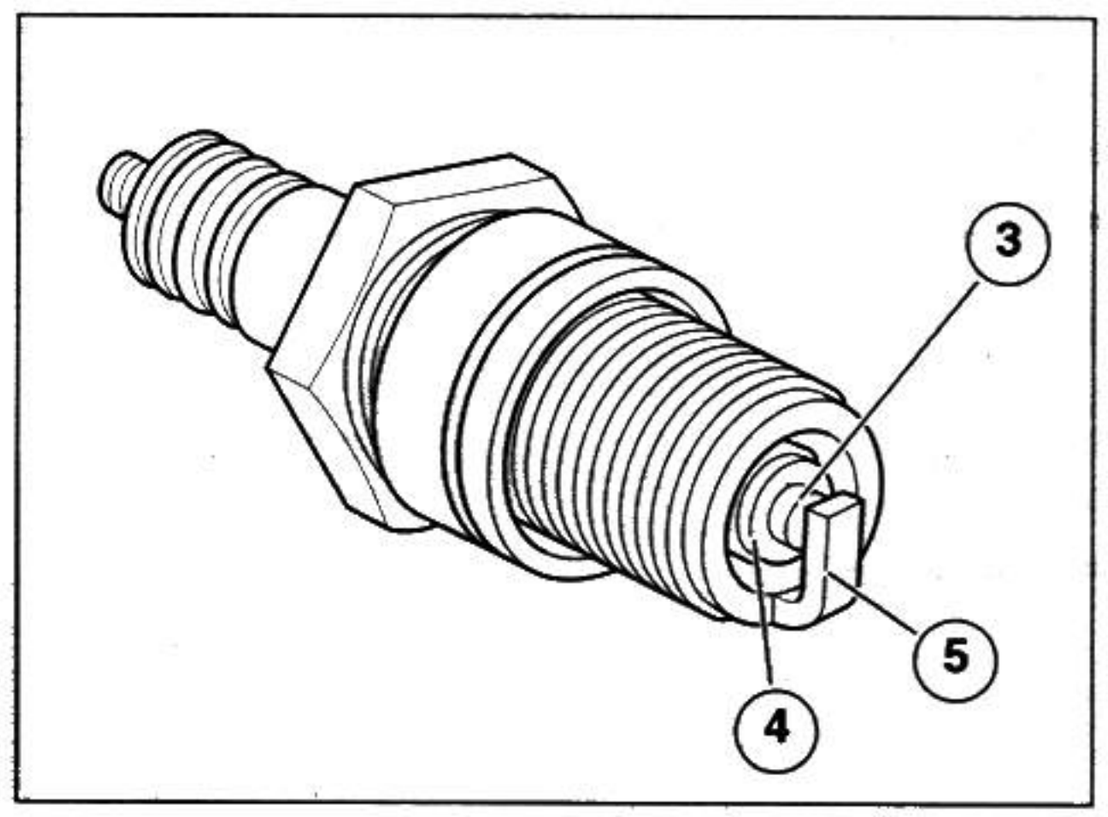

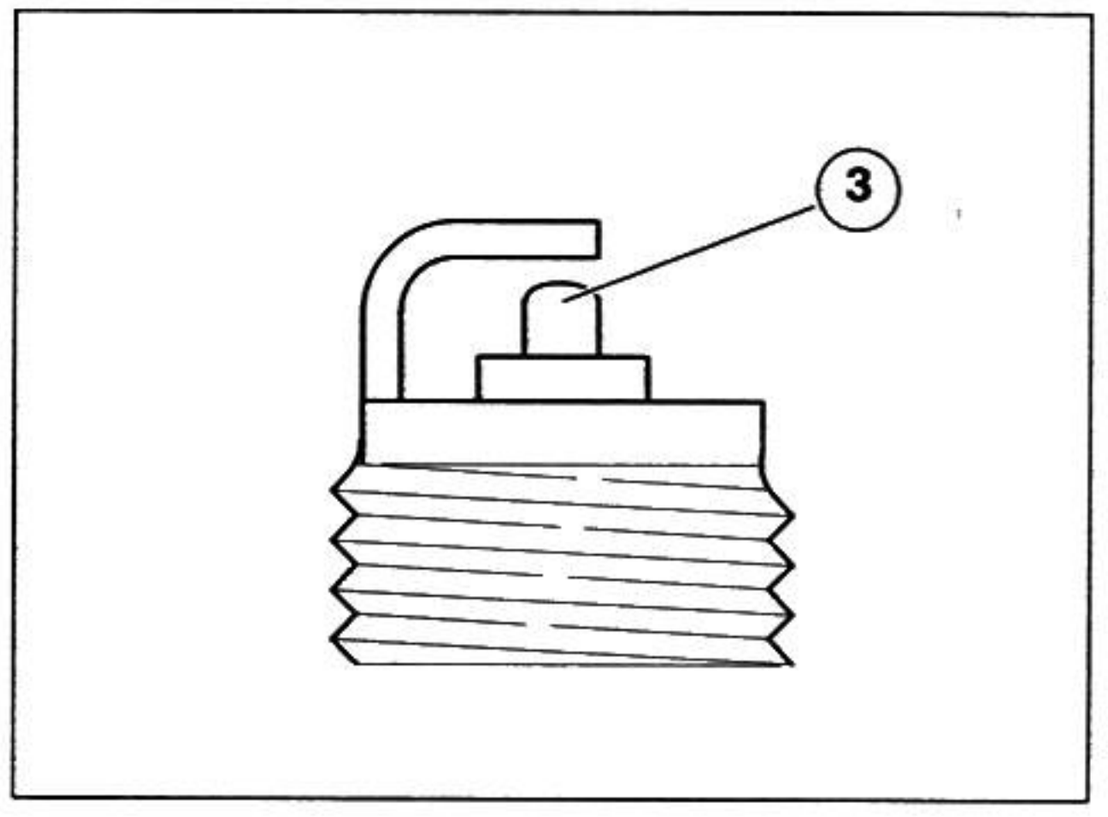

⚠ WARNING

When replacing a spark plug, always check the pitch and length of the thread.
If the threaded portion is too short, carbon deposits can build up on the internal thread of the head; this may damage to the engine when the appropriate kind is then installed.
Use only the recommended type of spark plugs, to avoid jeopardizing the performance and life-span of the engine.
Use a round wire feeler gauge (see figure) to check the spark plug gap, to avoid damaging the platinum coating.

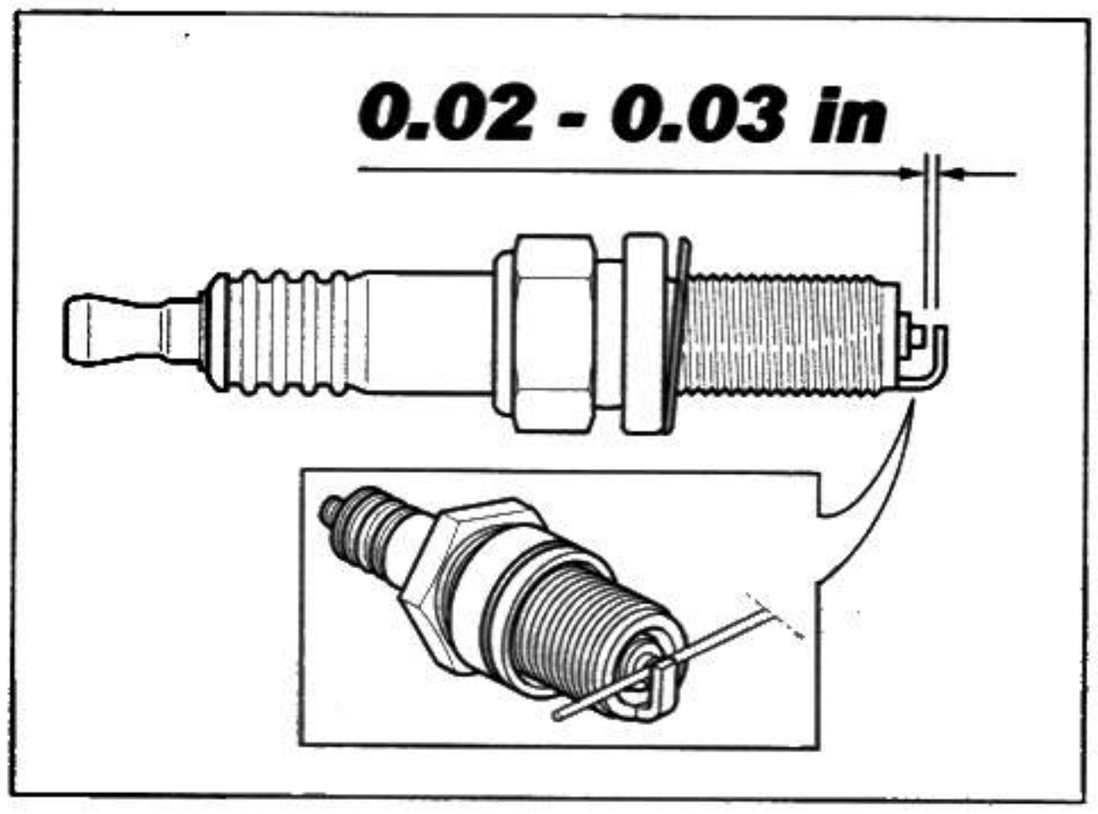

- Check the spark plug gap using a round wire feeler gauge.
  The gap should measure 0.02 - 0.03 in (0.6 - 0.7 mm). Adjust if needed, by carefully bending the earth electrode.
- Make sure that the gasket is in good condition. With the gasket in place, screw in the spark plug by hand to avoid damaging the thread.
- Tighten using the wrench provided in the tool kit, turning each spark plug 1/2 turn to compress the gasket.

Tightening torque for spark plug: 14 ftlb (20 Nm).

⚠ WARNING

The spark plug must be well tightened, otherwise the engine may overheat and be seriously damaged.

NOTE Upon reassembly, the rear cylinder spark plug cables must be placed inside the oil breather tube.

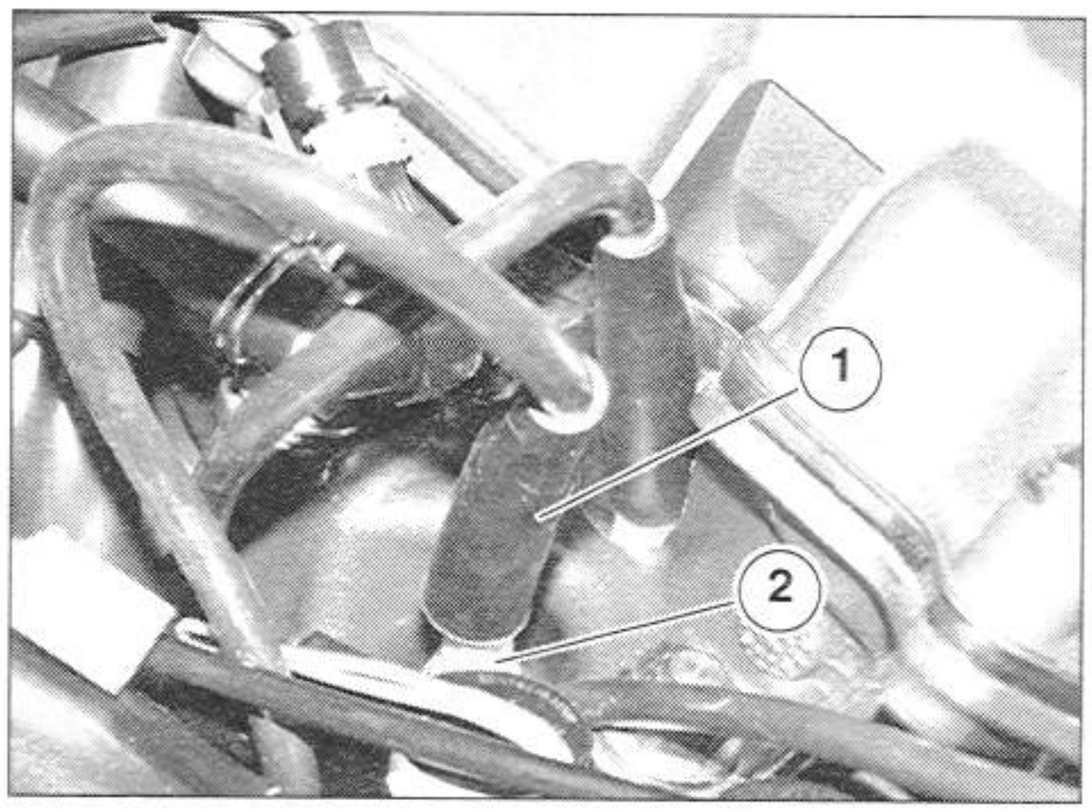

- Position the spark plug cap (1) correctly, so that it does not vibrate off.

⚠ DANGER

Make sure the cap (1) is correctly placed on the spark plug (2).

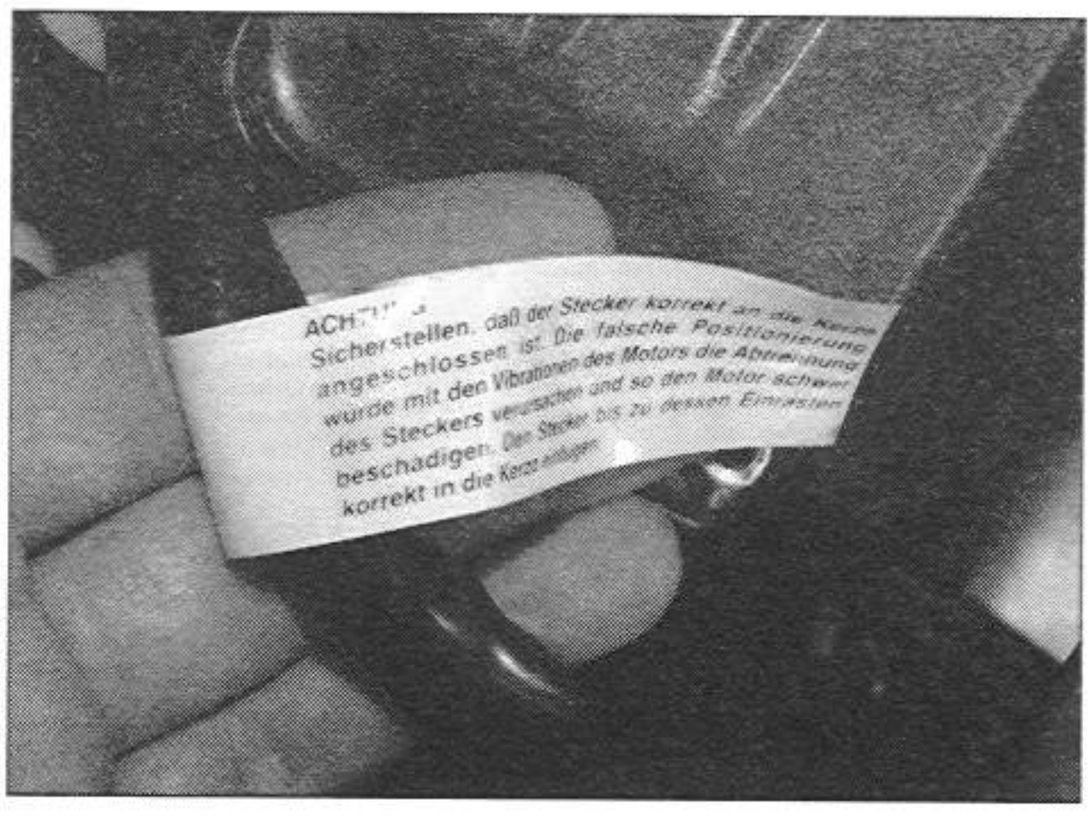

- Refit the fuel tank.

2.8 LIFTING THE FUEL TANK

Carefully read 1.4.1 (FUEL).

⚠ DANGER

Danger of fire.
Wait until the engine and exhaust silencer have completely cooled down.

- Unscrew and remove the two bolts (1).

Tightening torque for bolts (1): 2.21 ftlb (3 Nm)

- Remove the grille (2).
- Remove the saddle, see 7.1.1 (REMOVING THE SADDLE).
- Unscrew and remove the two bolts (3) that fasten the front part of the fuel tank (4). Recover the bushings and washers.

Tightening torque for bolts (3): 5.90 ftlb (8 Nm)

- Remove the fuel tank support rod (5) from the seats provided under the saddle.

NOTE The rubber-covered end of the rod (5) must be placed in the center hole of the steering head.

- Lift the front part of the fuel tank (4). Prop it into position using the rod (5) as shown in the figure.

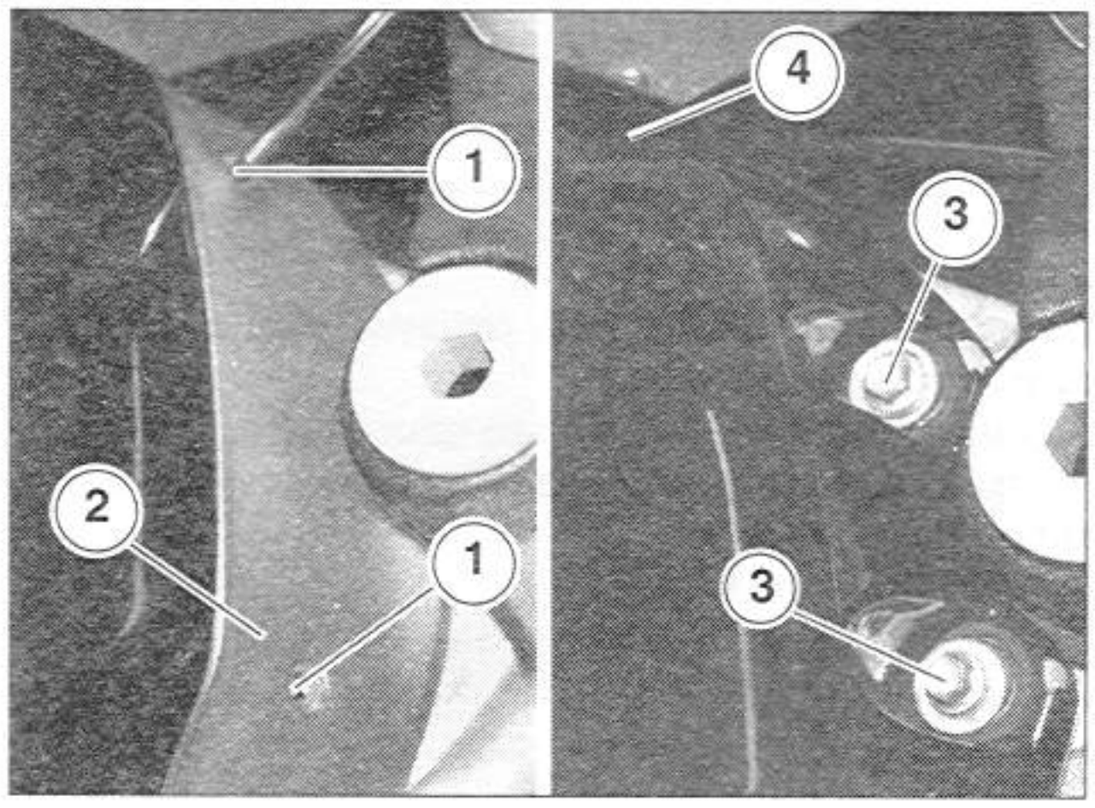

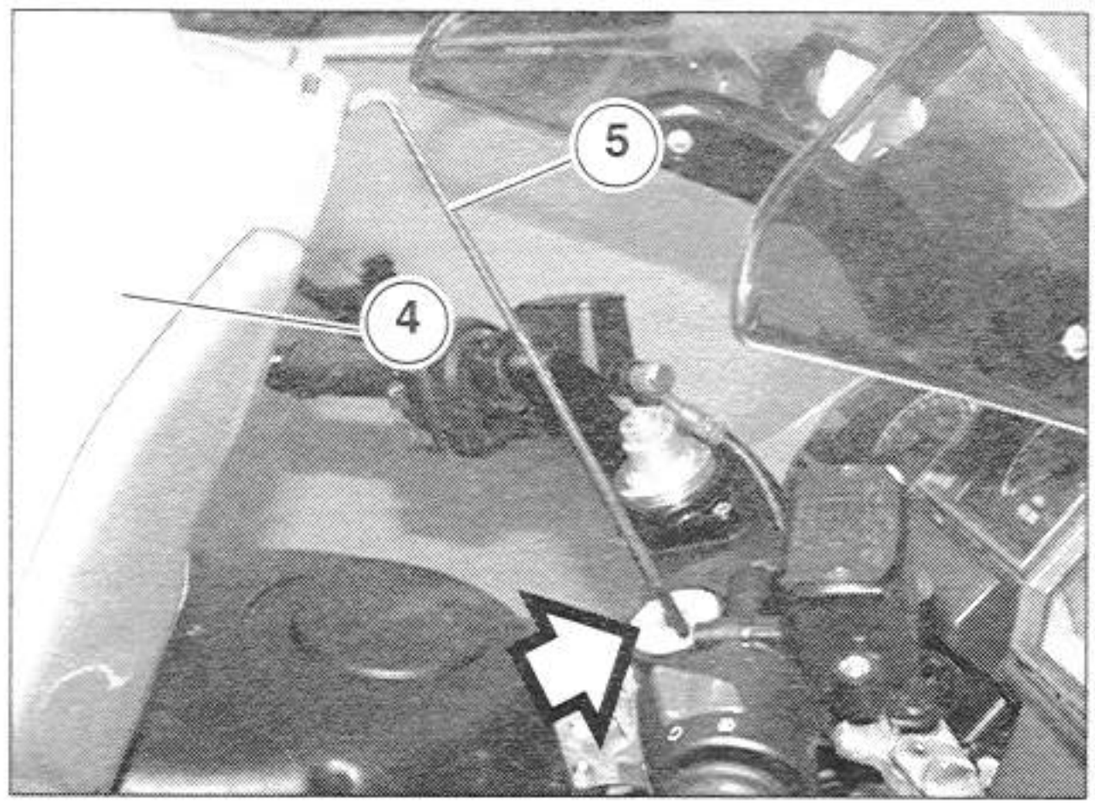

2.9 DRAINING FUEL FROM THE TANK

Carefully read 1.4.1 (FUEL).

⚠ DANGER

Danger of fire.
Wait until the engine and exhaust silencers have completely cooled down.
Gasoline fumes are harmful to your health.
Before proceeding, make sure that the work area has adequate ventilation.
Do not inhale the fuel fumes.
Do not smoke or use open flames.
Dispose of the fuel only at an approved fuel disposal site. Do not dump it down a storm drain, etc.

- Shut off the engine and wait for it to cool.
- Raise the fuel tank, see 2.8 (LIFTING THE FUEL TANK).
- Procure a container with a capacity greater than the amount of gasoline in the tank and place it on the floor on the left-hand side of the vehicle.

NOTE Place a cloth under the male quick-release coupling (1) to catch any spilled fuel.

- Disconnect the male quick-release coupling (1) from the container (2) by pressing the button.

NOTE Procure a hose complete with male quick-release coupling.

- Place the free end of the hose inside the container prepared beforehand.
- Insert the male quick-release coupling of the hose all the way into the quick-release container (2). The gasoline starts draining out immediately.
- Open the tank cap.
- Wait until all the gasoline has drained completely from the tank.

Once all the gasoline has drained out:

- Press the push-button to disconnect the male quick-release coupling from the container (2).
- Insert the male quick-release coupling (1) into the container (2).

NOTE Make sure that the male quick-release coupling (1) has been correctly inserted into the container (2).

- Refit the fuel tank.
- Close the tank cap.

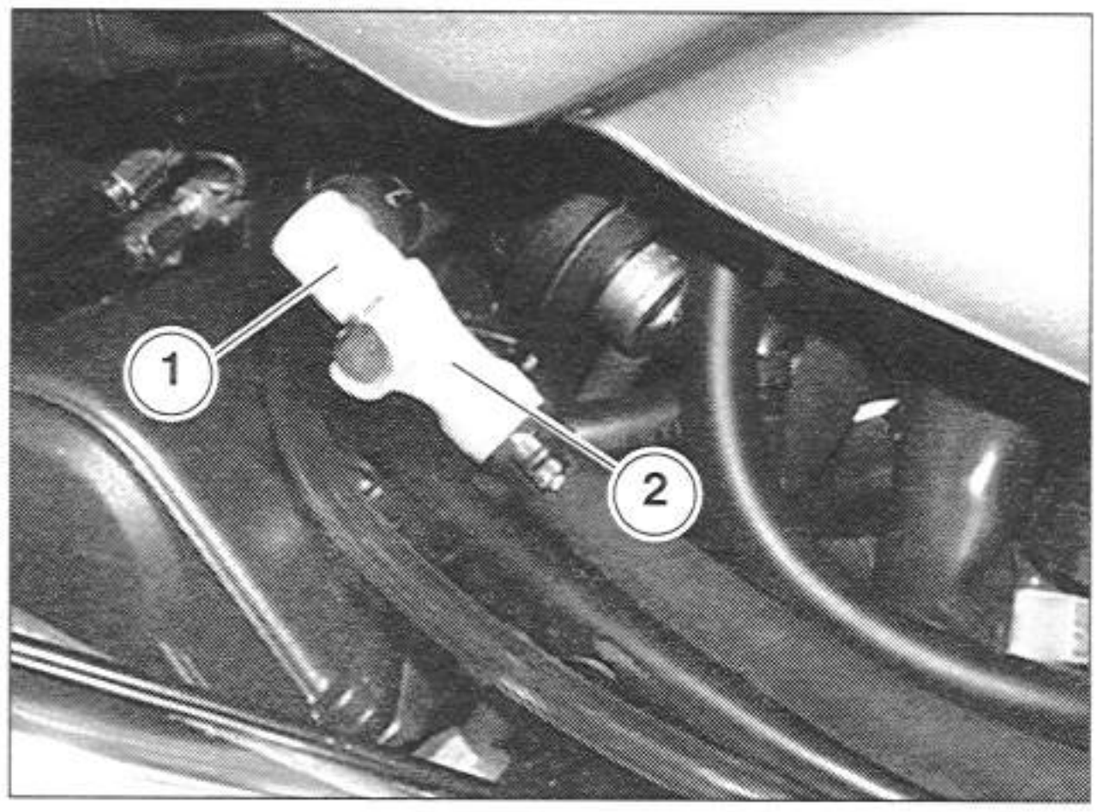

2.10 AIR FILTER

Carefully read 1.3.9 (PRECAUTIONS AND GENERAL INFORMATION).

Inspect the air filter every 4687 mi (7500 Km) or 8 months, and replace it every 9375 mi (15000 Km) or 16 months, or more frequently if the vehicle is used on dusty or wet roads.
In this case you may wish to partially clean the air filter after traveling on such roads.

⚠ WARNING

Partial cleaning of the air filter is no substitute for replacing the filter, nor does it postpone the need to do so. Do not start the engine with the air filter removed. Do not use gasoline or solvents to clean the filter; this could cause a fire in the fuel system. Use only a fire-proof solvent or detergent. This can cause serious burns or destruction of your vehicle.

REMOVAL

- Raise the fuel tank, see 2.8 (LIFTING THE FUEL TANK).
- Unscrew and remove the seven fastening screws (1) holding the filter case cover (2).

Tightening torque for screws (1): 1.47 ftlb (2 Nm).

- Remove the filter case cover (2).
- Extract the air filter (3).

⚠ WARNING

Thoroughly clean the air filter seat on the filter box to remove any foreign matter. Plug the throttle body and air filter seat openings with clean rags to prevent any foreign matter from entering the intake tubes.

- Make sure the gasket (5) is intact; replace if damaged.

PARTIAL CLEANING

⚠ WARNING

Do not press down or beat on the metal screen of the air filter (3). Do not use screwdrivers or similar tools on the filter itself.

- Hold the air filter (3) upright and strike it repeatedly against a clean surface.
- If necessary, clean the air filter (3) with a blast of compressed air (aiming it outwards from inside the filter).
- Clean the outside of the air filter (3) with a clean cloth.

CHANGING

- Replace the air filter (3) with another of the same kind.
- Every 7500 km (4687 mi), remove the plug (4) and remove any dirt that may have settled inside the filter case.

⚠ WARNING

Check the filtering element while cleaning to make sure there are no tears. If so, replace the filtering element. Make sure that the filtering element is correctly positioned so that it does not allow any unfiltered air to pass through. Remember that early wear on the piston rings and cylinder is often caused by a faulty or poorly positioned filtering element. Clean the filtering element more often if the vehicle is used in dusty areas. Using the vehicle without the filtering element, or with a damaged element, will considerably increase wear and tear on the engine.
Make sure that the filtering element is always in perfect condition, as long engine life depends on the air cleaner being in perfect condition.

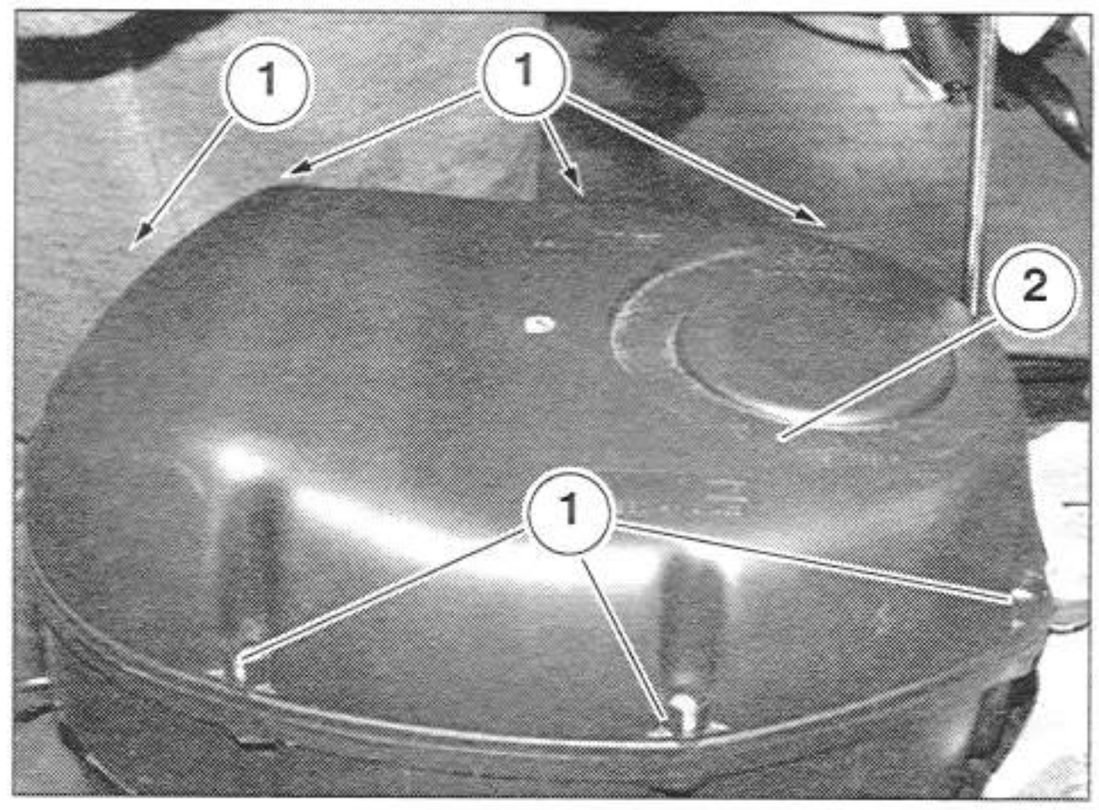

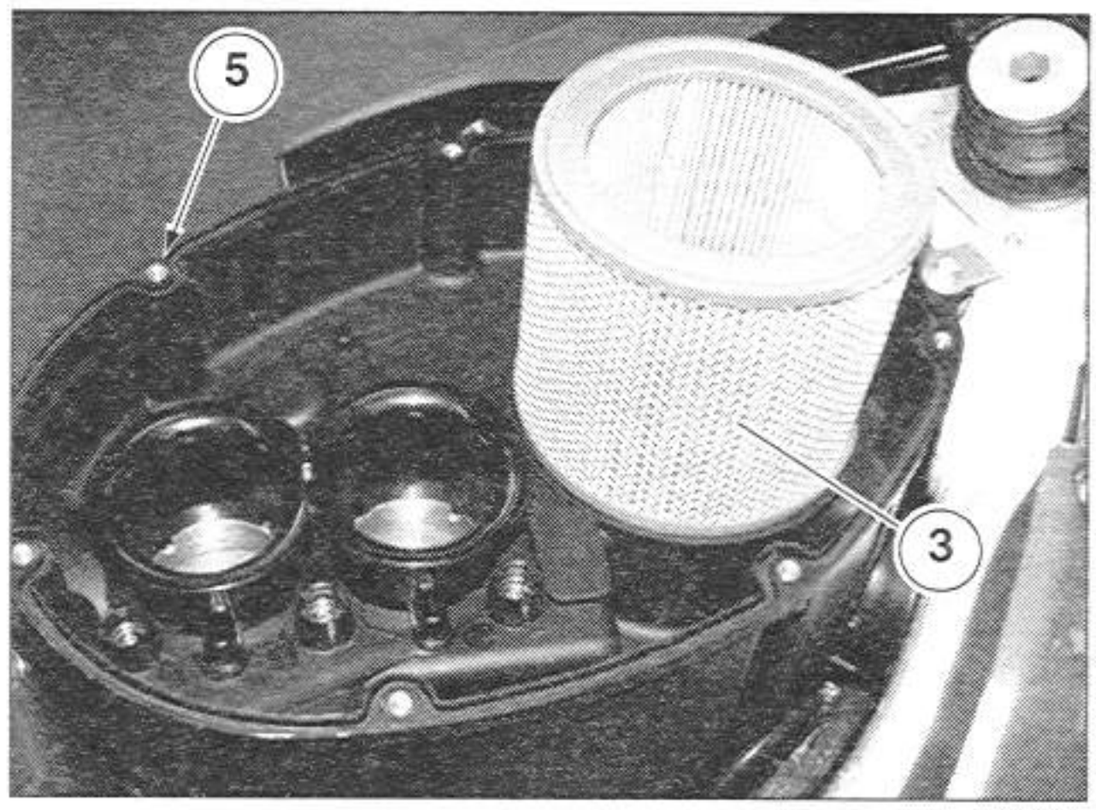

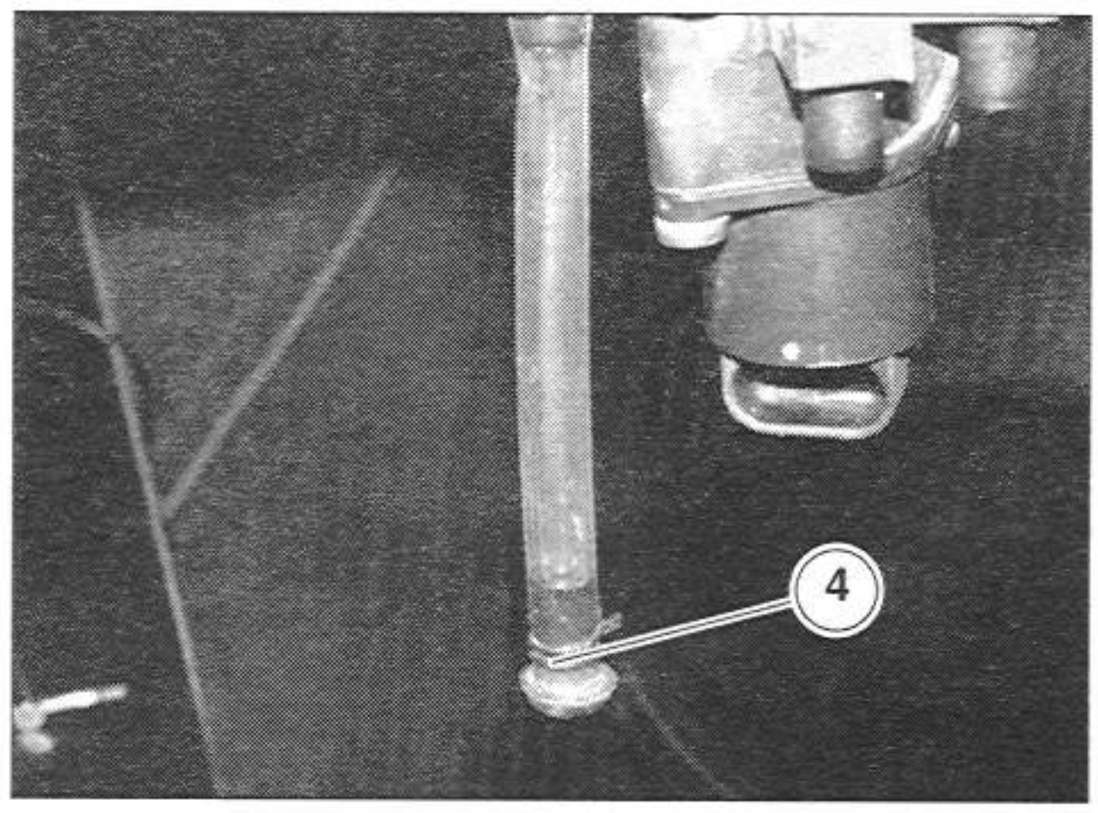

2.11 THROTTLE

Check after the first 625 mi (1,000 km) and then every 4687 mi (7,500 Km) or every 8 months thereafter.

2.11.1 CHECKING THE OPERATION OF THE THROTTLE CONTROL

⚠ DANGER

Using the vehicle with damaged, bent or tangled throttle cables may prevents the throttle from working properly, causing the rider to lose control of the vehicle while riding.

⚠ DANGER

This can lead to an upset, with subsequent accident, serious injury, or even death. Never ride your motorcycle unless the throttle cables are in perfect working order.

Make sure that turning the handlebar does not alter the engine idle speed, and that when the throttle is released it returns gently and automatically to its original position.

⚠ DANGER

If turning the handlebar alters the engine speed, do not ride the vehicle until you have rectified the problem. Failure to observe this warning can lead to a runaway engine, loss of control, and subsequent serious accident, injury, and even death.

If necessary:

- ◆ Check the correct position and the lubrication of the following components:
  - sheath;
  - throttle grip adjuster (1);
  - throttle body adjuster (2);
  - throttle body pin (3)
  - cable fittings (ends);
  - throttle control.
- ◆ Check the idle speed, see 2.11.2 (ADJUSTING THE IDLE SPEED).
- ◆ Check the throttle control adjustment, see 2.11.3 (ADJUSTING THE THROTTLE CONTROL).

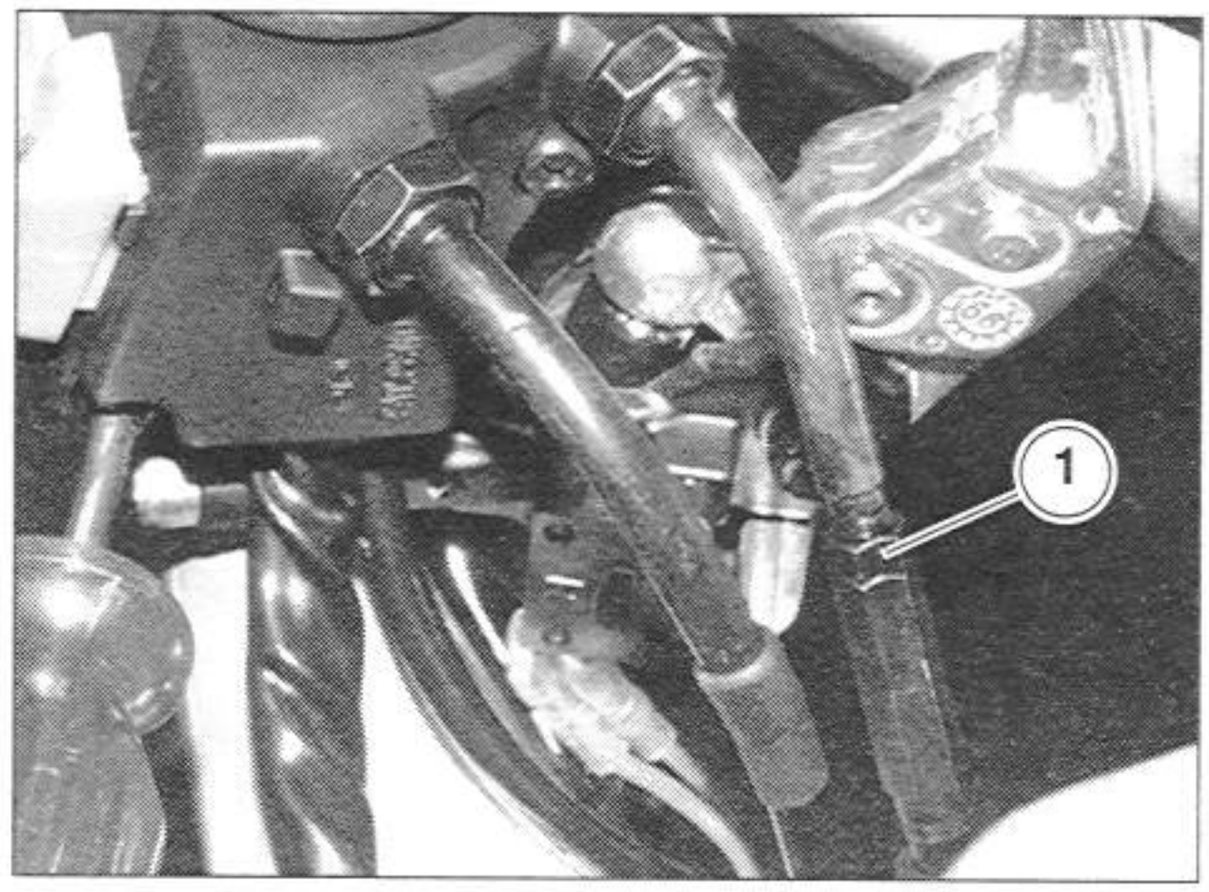

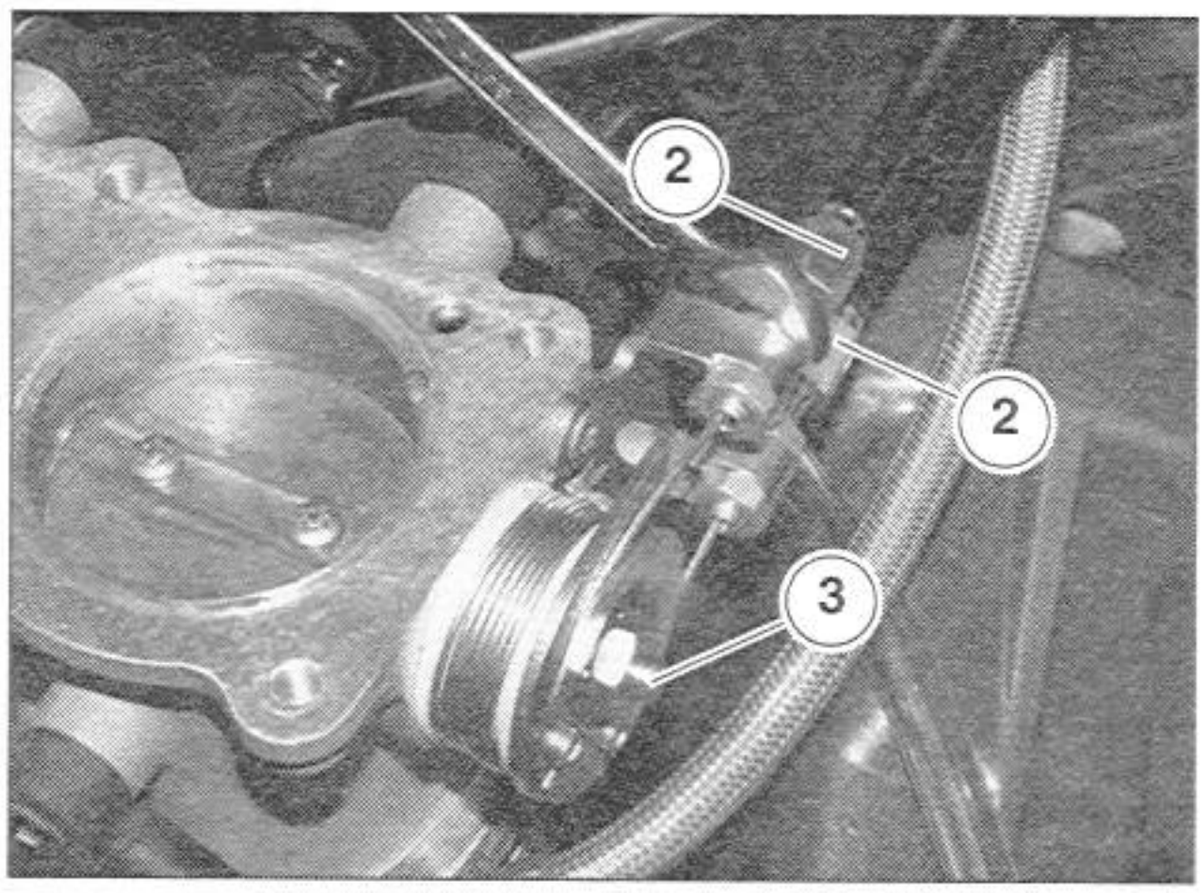

2.11.2 ADJUSTING THE IDLE SPEED

The idle speed may not be adjusted manually.

The idle speed is regulated by an electric step motor (1), which changes the air flow by means of a small piston.

The control unit decides whether to open or close the piston based on three parameters:
- position of the throttle valve.
- engine rpm.
- coolant temperature.

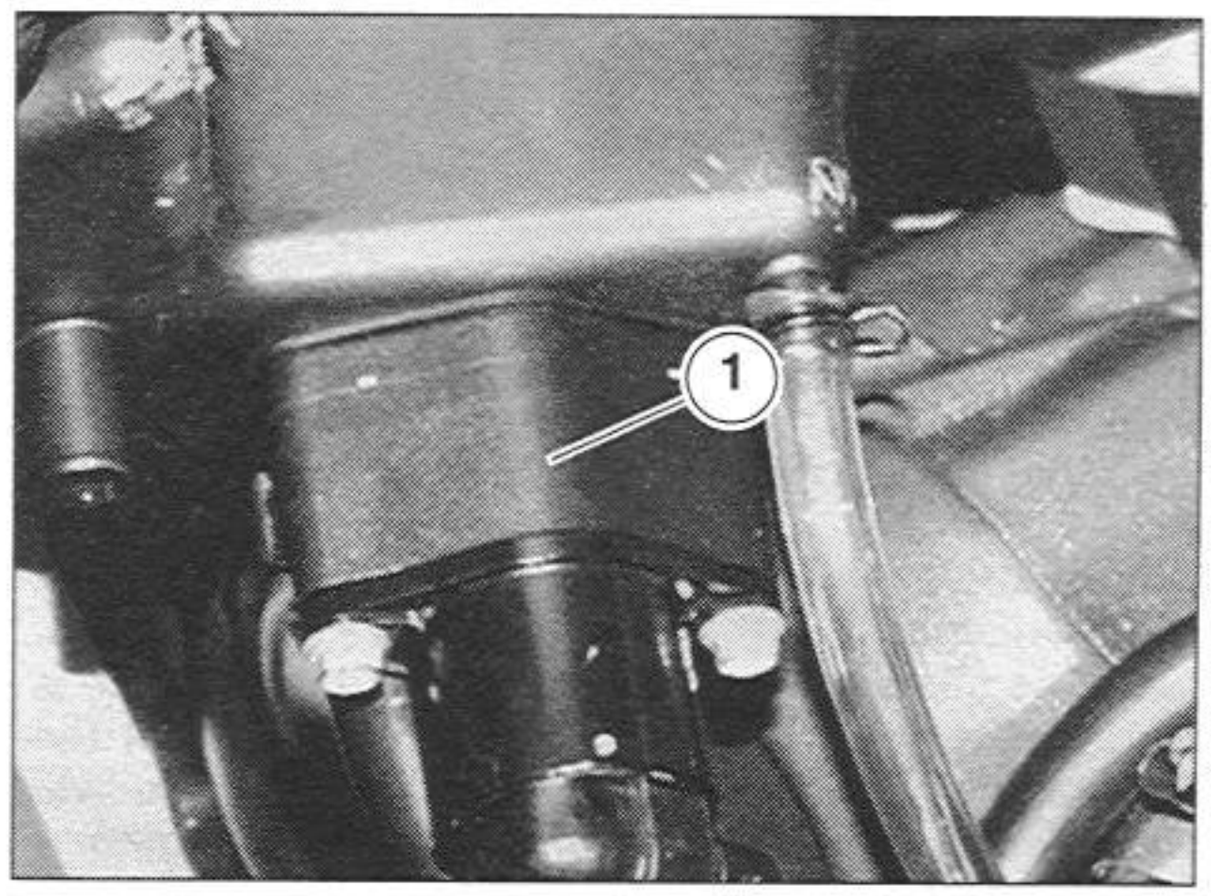

2.11.3 ADJUSTING THE THROTTLE CONTROL

Carefully read 1.3.9 (PRECAUTIONS AND GENERAL INFORMATION).

Check the throttle control cables after the first 625 mi (1,000 km) and every 4687 mi (7,500 Km) thereafter.
The play of the throttle adjuster must be **0.08 - 0.11 in (2–3 mm)**, measured at the edge of the grip.

If not:

- Place the vehicle on the stand.
- Pull back the rubber boot (1).
- Loosen the lock nut (2).
- Rotate the adjuster (3) so as to restore the proper play.
- After the adjustment, tighten the lock nut (2) and check the play again.
- Replace the rubber boot (1).

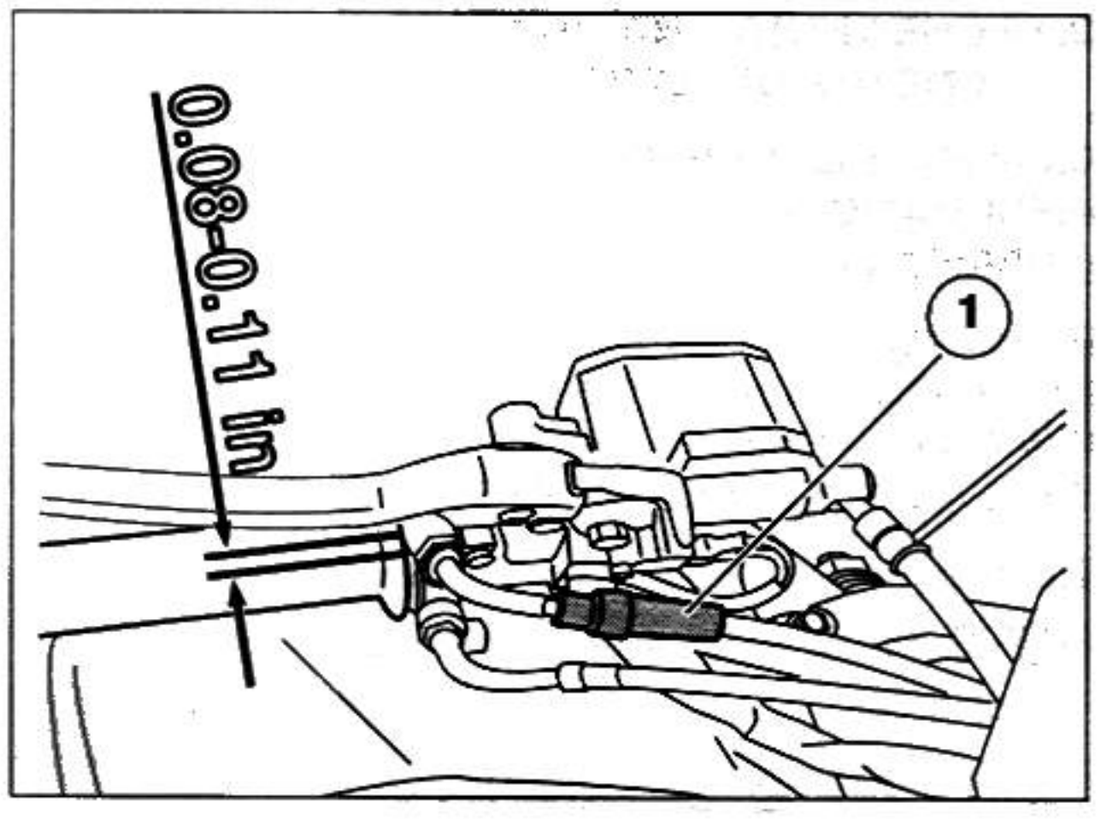

⚠ WARNING

After completing the adjustment, make sure that turning the handlebar does not alter the engine idle speed, and that when the throttle is released it returns gently and automatically to its original position. Failure to heed this warning can lead to a stuck throttle and runaway motor which can cause a serious accident with subsequent serious injury or even death.

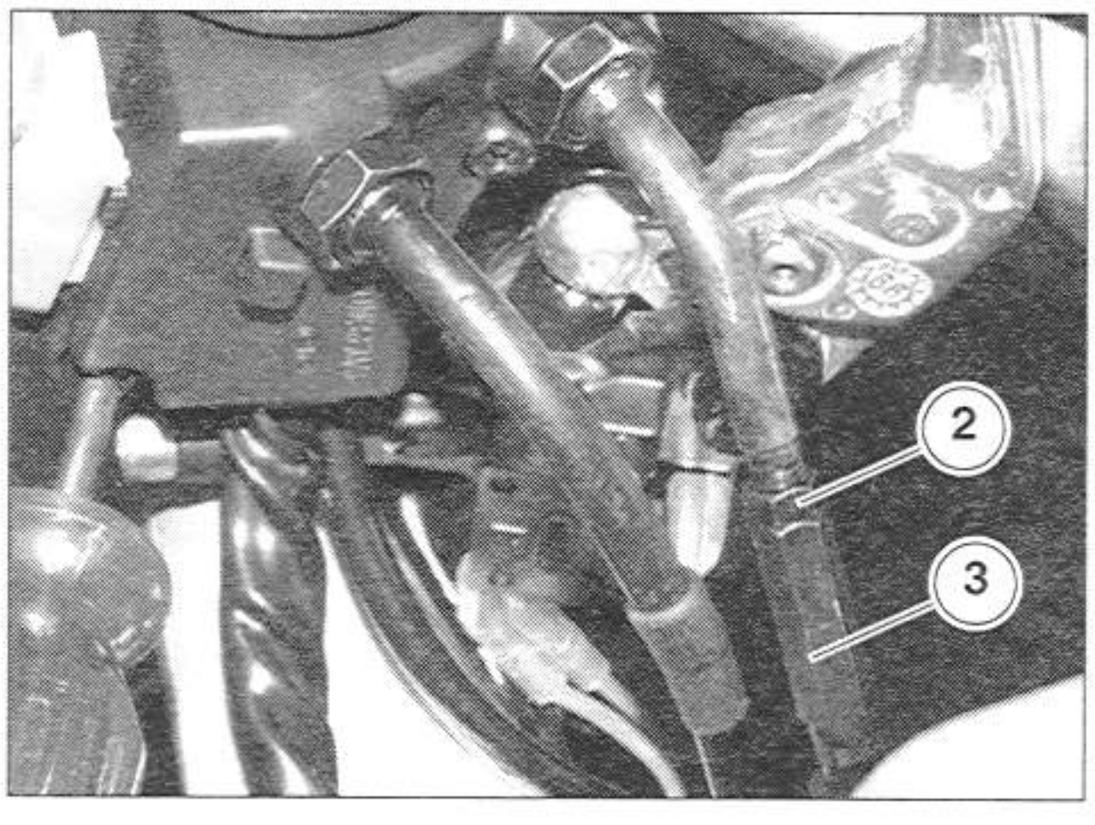

2.12 CHECKING AND TOPPING UP THE ENGINE OIL LEVEL

Carefully read 1.3.9 (PRECAUTIONS AND GENERAL INFORMATION), see 1.4.1 (FUEL) and 1.4.2 (LUBRICANTS).

Periodically check the engine oil level. Change the oil after the first 625 mi (1,000 km), and every 4687 mi (7,500 Km) or 8 months thereafter, see 2.13 (CHANGING THE ENGINE OIL AND OIL FILTER).

To check:

NOTE Place the vehicle on the center stand on a flat, hard surface.

⚠ WARNING

The engine oil level must be checked while the engine is warm.
If you check the engine oil level when the engine is cold, the oil might temporarily fall below the "MIN" level.
This is not a problem as long as the oil pressure LED " ⚠ " does not light.

- Start the engine.
- Ride the vehicle for approximately 10 miles, or 15-20 minutes.
- Shut off the engine.
- Place the vehicle on the center stand.
- Keep the vehicle upright with both wheels resting on the ground.
- Through the slot on the left fairing, check the engine oil level on the transparent tube (1).

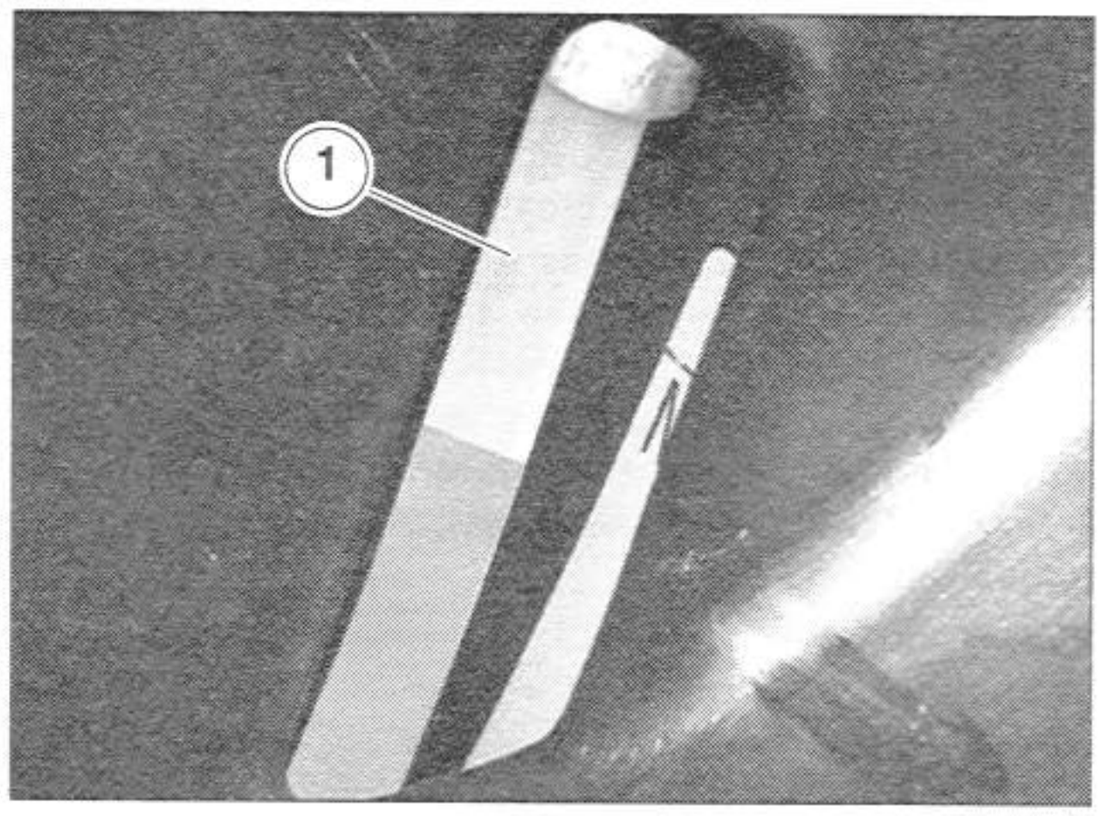

MAX = maximum level.
MIN = minimum level.

- The difference between **"MAX"** and **"MIN"** is approximately 30.51 cuin (500 cm³).
- The level is correct if it is around the **"MAX"** mark.

⚠ WARNING

Do not go above the "MAX" marking or below the "MIN" marking, as this could seriously damage the engine.
Do not add additives or other substances to the oil.
If using a funnel or other tool, make sure it is perfectly clean.

Top up the engine oil level if necessary:
- Unscrew and remove the screw (2).
- Remove the cover (3).
- Unscrew and remove the filler cap (4).
- Top up the reservoir to restore the proper level, see 1.12 (LUBRICANT CHART).

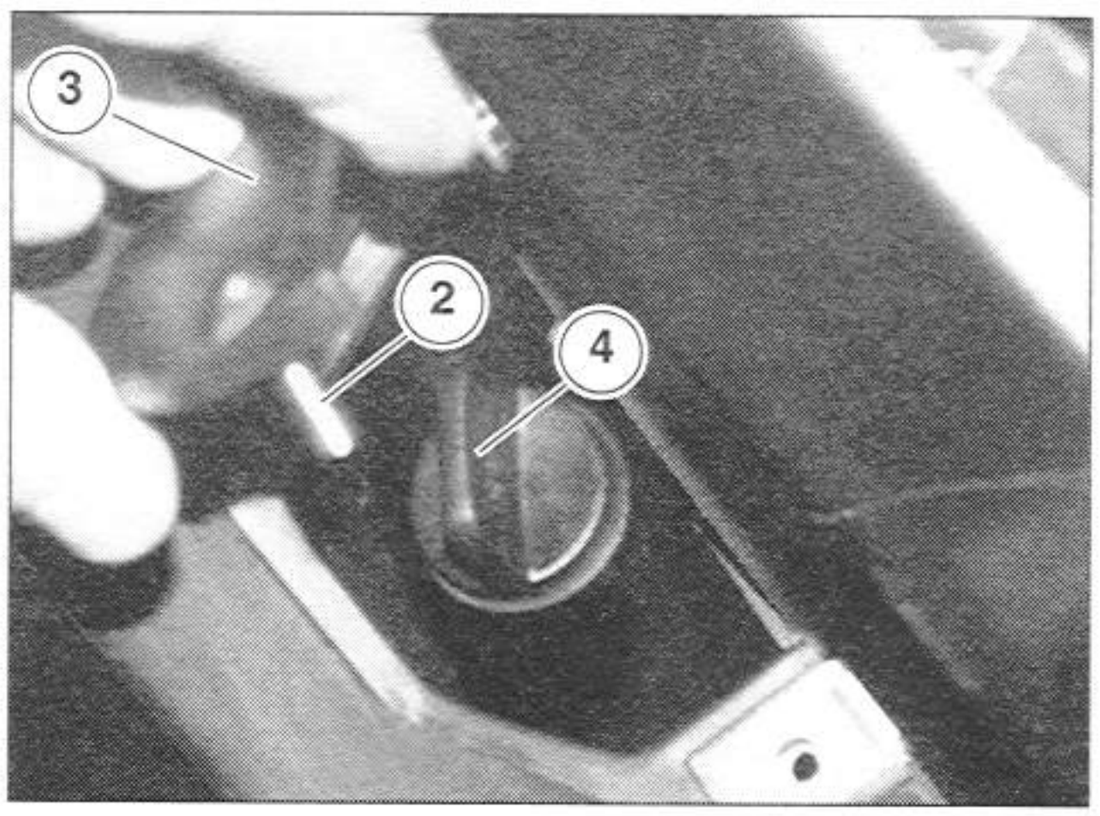

2.13 CHANGING THE ENGINE OIL AND OIL FILTER

Carefully read 1.3.9 (PRECAUTIONS AND GENERAL INFORMATION), see 1.4.1 (FUEL) and 1.4.2 (LUBRICANTS).

Periodically check the engine oil level. Change the oil after the first 625 mi (1,000 km), and every 4687 mi (7,500 Km) or 8 months thereafter, see 2.13 (CHANGING THE ENGINE OIL AND OIL FILTER).

⚠ WARNING

We recommend replacing the oil more often if the vehicle is used in dusty areas.
For competitive use replace every 2343 mi (3750 km).

TO CHANGE

NOTE It is best to change the oil after the vehicle has been thoroughly warmed up, that is, ridden at least 20 or 30 minutes.

⚠ DANGER

Before following the procedure described below, let the engine and muffler cool to ambient temperature, to prevent burns.

NOTE Place the vehicle on the center stand on a flat, hard surface.

- Remove the left fairing see 7.1.28 (REMOVING THE SIDE FAIRINGS).
- Remove the lower fairing, see 7.1.33 (REMOVING THE LOWER FAIRING).
- Place a container (1) with a capacity greater than 1 gallon (4000 cm³) under the drain plug (2) on the reservoir (3).
- Unscrew and remove the drain plug (2) from the reservoir (3).
- Unscrew and remove the filler cap (4).
- Drain the oil and let it drip for a few minutes into the container (1).
- Check the gasket of the drain plug (2) on the reservoir (3) and replace if necessary.
- Screw and tighten the drain plug (2).

Tightening torque for drain plug (2): 11.06 ftlb (15 Nm).

- Move the container (1) under the engine oil drain plug(4) on the engine.
- Unscrew and remove the drain plug (5) from the engine.
- Drain the oil and let it drip for a few minutes into the container (1).

⚠ WARNING

Always dispose of oil in compliance with environmental regulations.
Turn it over to the nearest firm specialized in recovering used oil, or to the supplier.

- Remove any metal residue stuck to the drain plug (5), reinstall and tighten the drain plug.

Tightening torque for drain plug (5): 8.85 ftlb (12 Nm).

- Use a cloth to wipe up any spilled or splashed oil.

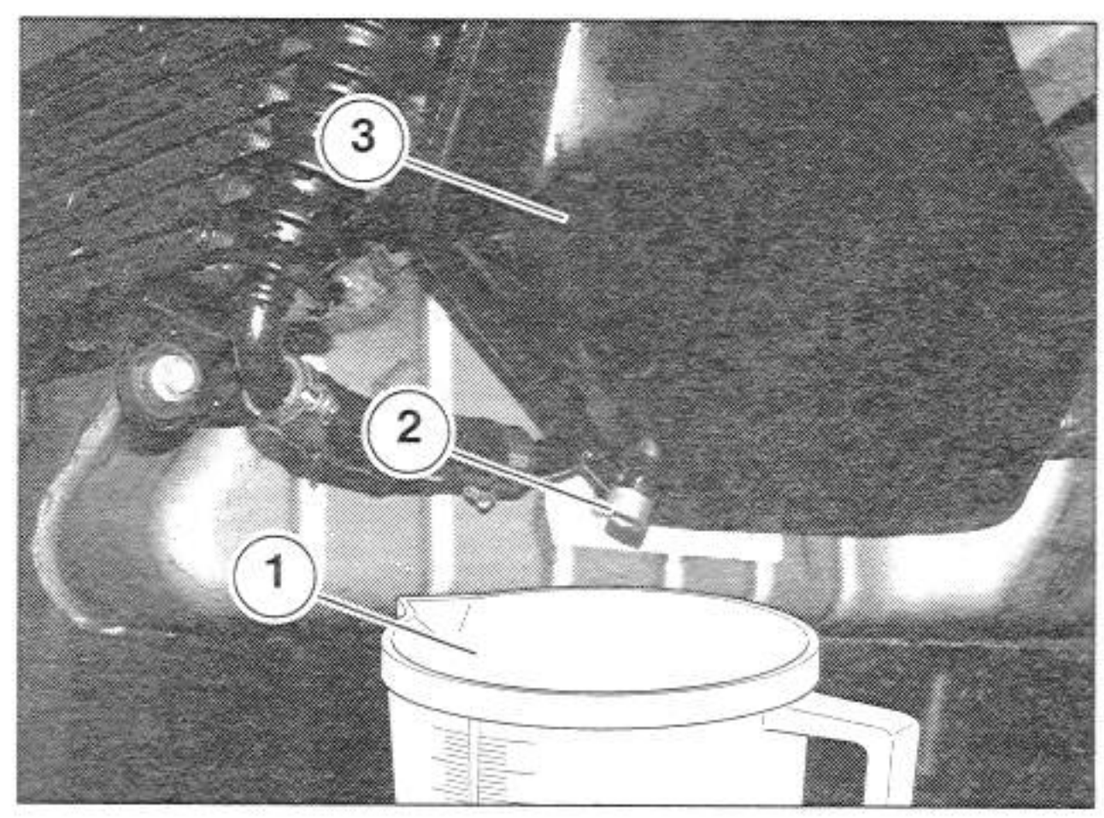

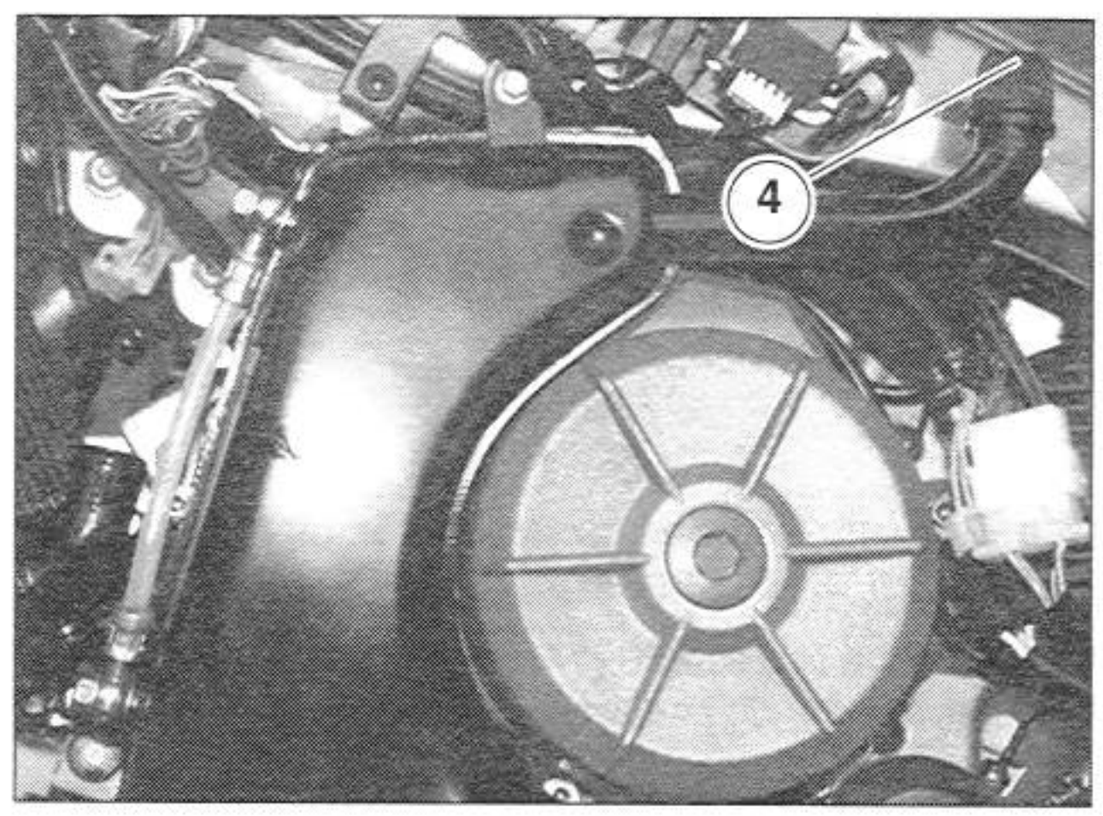

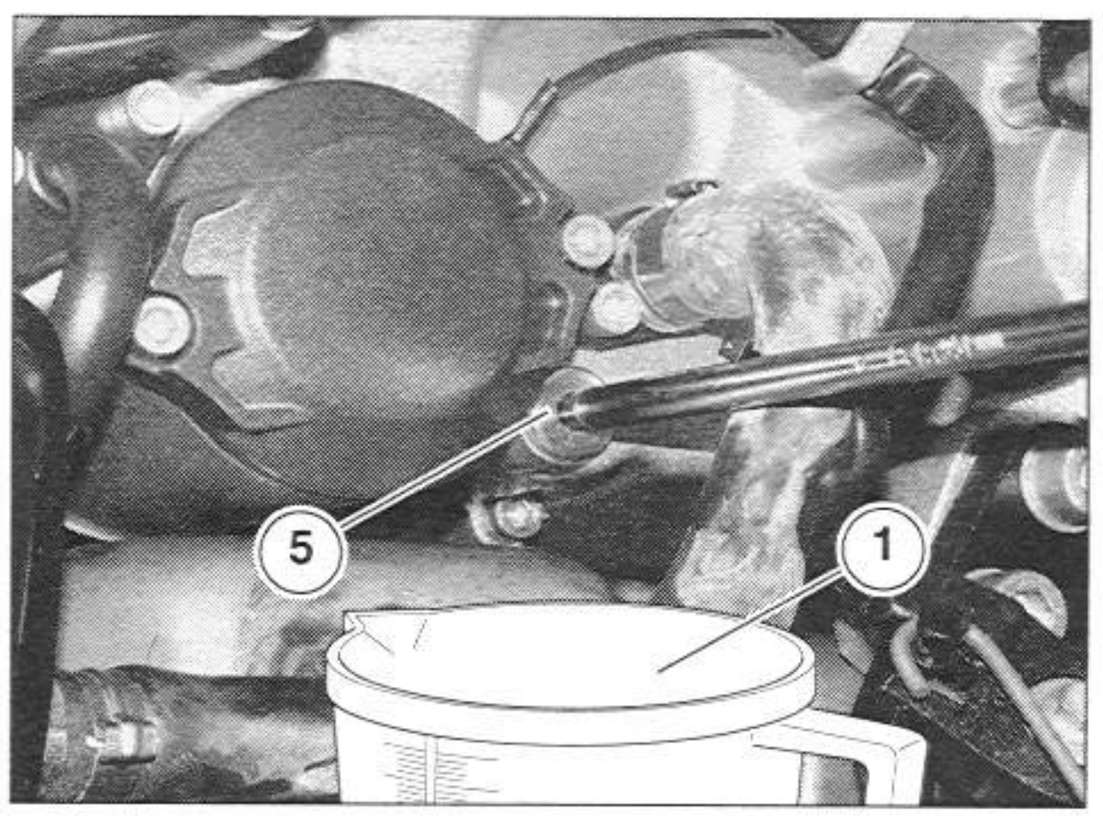

CHANGING THE ENGINE OIL FILTER

Change the engine oil filter after the first 625 mi (1,000 km) and every 4687 mi (7,500 Km) thereafter (or with each engine oil change).

- Unscrew the two screws (6) and remove the cover (7).
- Remove the engine oil filter (8).

⚠ WARNING

Do not re-use oil filters.

- Spread a thin film of oil on the O-ring (9) of the new engine oil filter.
- Insert the new engine oil filter.
- Reassemble the cover (7), install and tighten the two screws (6).

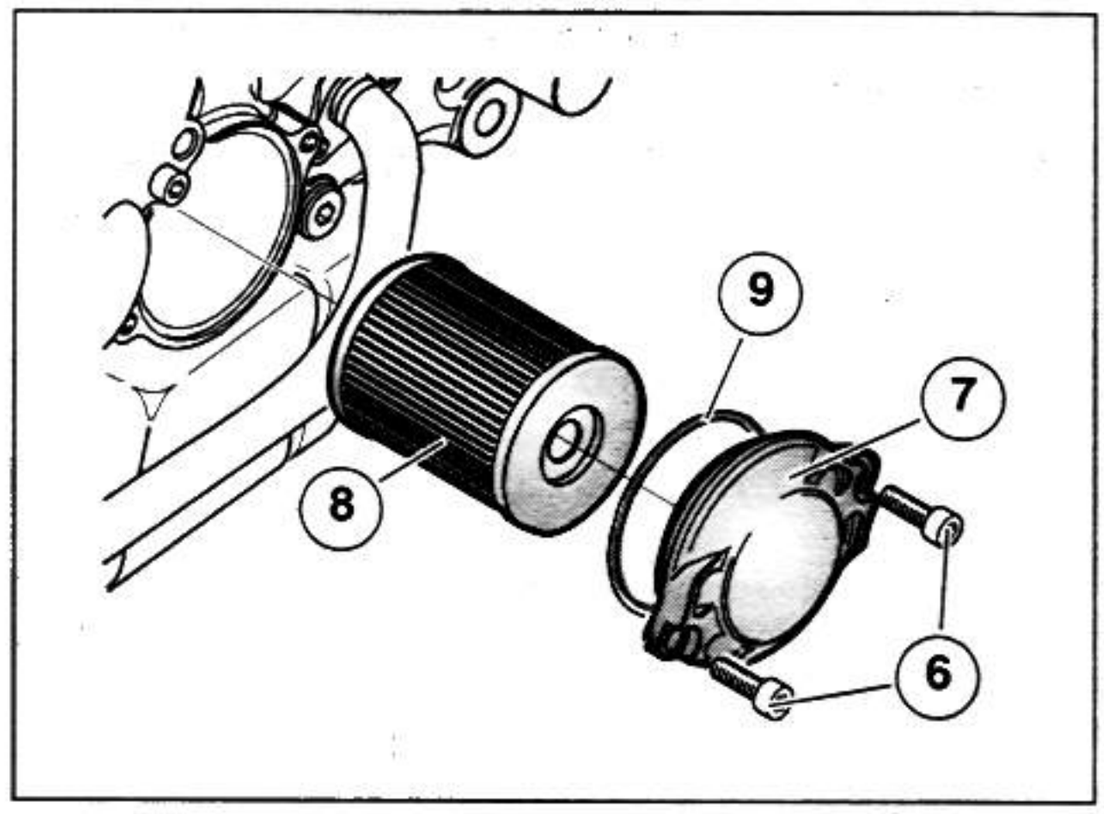

CLEANING THE OIL TANK FILTER

Clean the engine oil filter (10) on the tank every 9375 mi (15000 km) (or every two engine oil changes).

NOTE Use the special click clamp installation pliers (code 0277295); during reassembly, replace each clamp with a new one of the same kind.

- Loosen the clamp (12) and disconnect the hose (13).
- Unscrew and remove the oil tank filter (10) and clean with a blast of compressed air.

NOTE You must partially remove the engine oil tank (3) in order to slide out the engine oil filter.

- Unscrew and remove the two screws (14).
- Move the engine oil tank (3) outwards.
- Remove the engine oil filter (10) on the tank and clean with a blast of compressed air.

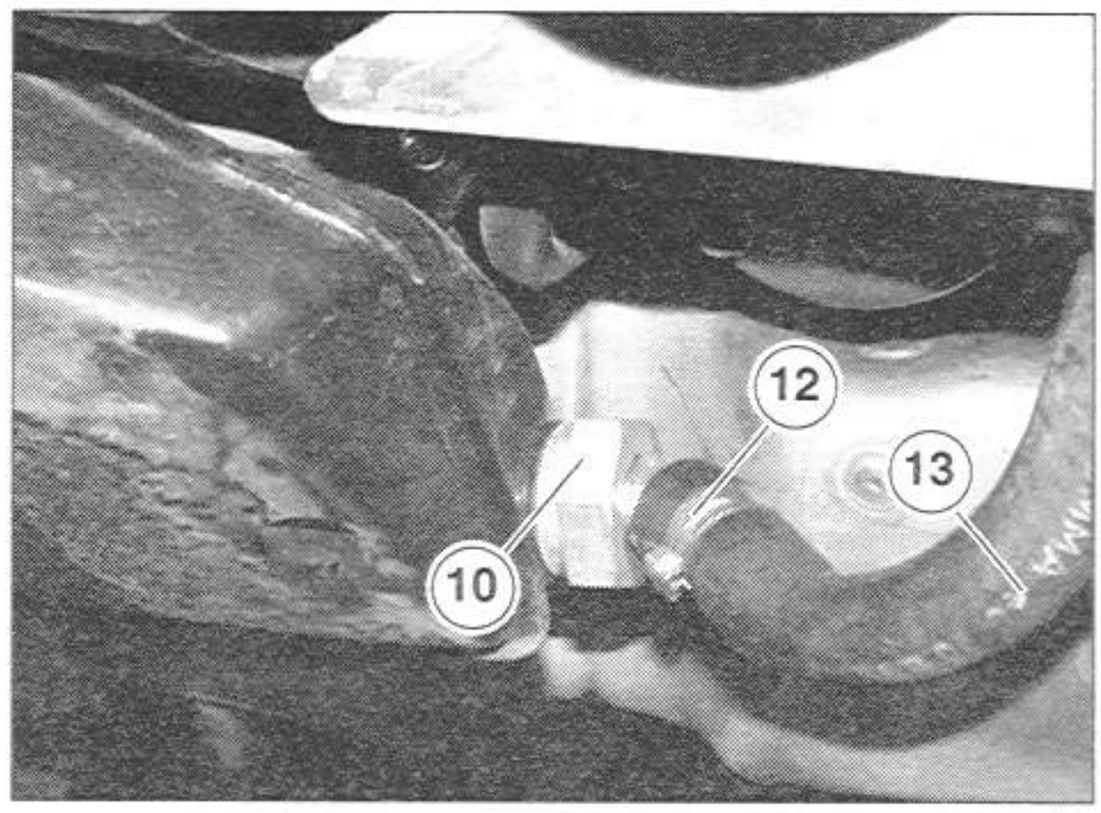

⚠ WARNING

When reassembling make sure that the fitting (15) of the filter oil (10) is facing outwards. The pipe (13) must not be in contact with the expansion tank.

- Carefully inspect the seal of the engine oil filter (10) on the tank; screw on and tighten.

Tightening torque for the engine oil filter (10) on the tank: 22.13 ftlb (30 Nm).

- Replace the two screws (14).
- Refit the pipe (13) and tighten the new clamps.

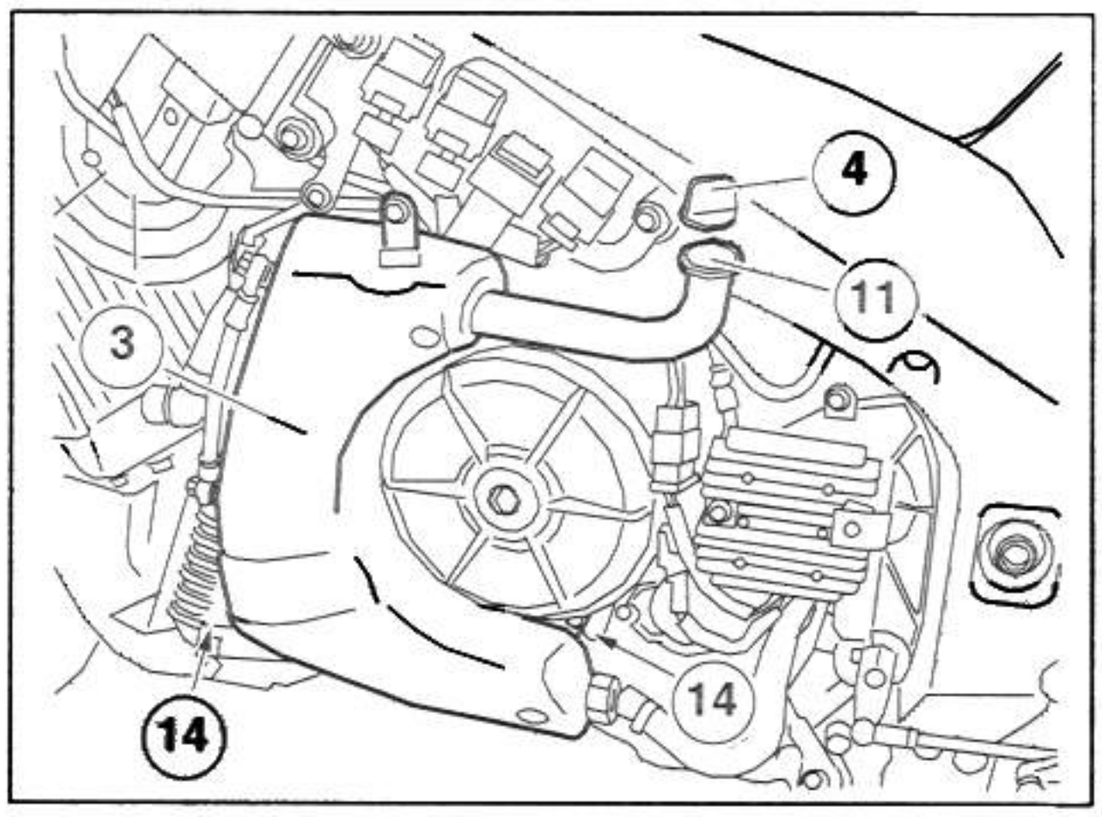

⚠ WARNING

Do not add additives or other substances to the oil. If using a funnel or other tool, make sure it is perfectly clean.

- Pour approximately 3½ quarts (3500 cm³) of engine oil through the filling opening (11), see 1.12 (LUBRICANT CHART).
- Screw on the filler cap (4).
- Start the engine and let it idle for around one minute, to allow the engine oil system to fill up completely.
- Check the engine oil level and top up if necessary, see 2.12 (CHECKING AND TOPPING UP THE ENGINE OIL LEVEL).

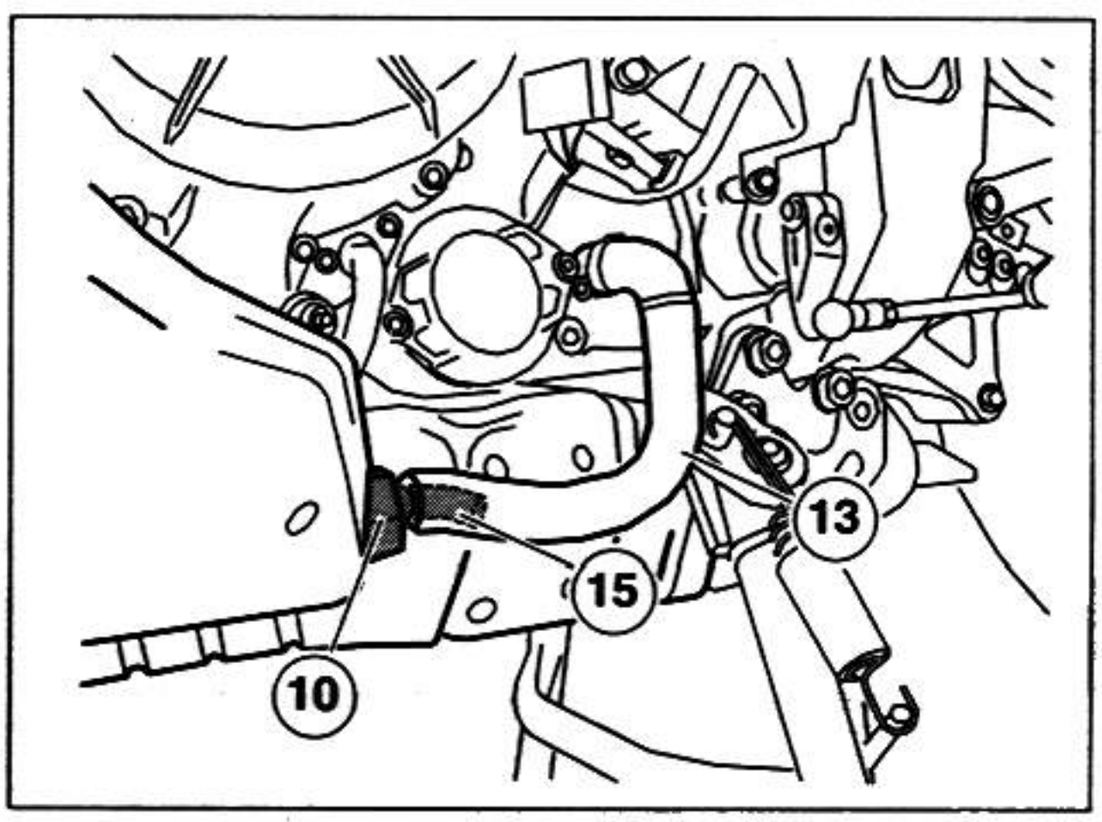

2.14 CHECKING AND TOPPING UP THE COOLANT

Carefully read 1.3.9 (PRECAUTIONS AND GENERAL INFORMATION) and 1.4.6 (COOLANT).

Always check the coolant level before riding, and change it every 2 years.

⚠ WARNING

The coolant level should be checked and topped up only while the engine is cold.

- Shut off the engine and wait for it to cool.

NOTE Place the vehicle on the center stand on a flat, hard surface.

- Keep the vehicle upright with both wheels resting on the ground.
- Check through the slot provided on the right fairing to make sure that the level of fluid in the expansion tank (1) is between the **"FULL"** and **"LOW"** marks.

FULL = maximum level
LOW = minimum level

If not:

- Unscrew and remove the screw (2).
- Remove the cover (3).
- Unscrew and remove the filler cap (4).

⚠ DANGER

Coolant is harmful if swallowed; contact with skin or eyes may cause irritation.
Do not insert your finger or any foreign objects to check for coolant.
See Safety Warnings, Section 1.2 (SAFETY WARNINGS).

⚠ WARNING

Do not add additives or other substances to the fluid. If using a funnel or other tool, make sure it is perfectly clean.

- Top up with coolant, see 1.12 (LUBRICANT CHART) until the level of fluid approximately reaches the **"FULL"** mark.
- Do not exceed this level, to keep fluid from leaking out while the engine is running.
- Replace the filler cap (4).

⚠ WARNING

If coolant is used up too quickly and the expansion tank (1) becomes empty, check for leaks in the circuit.

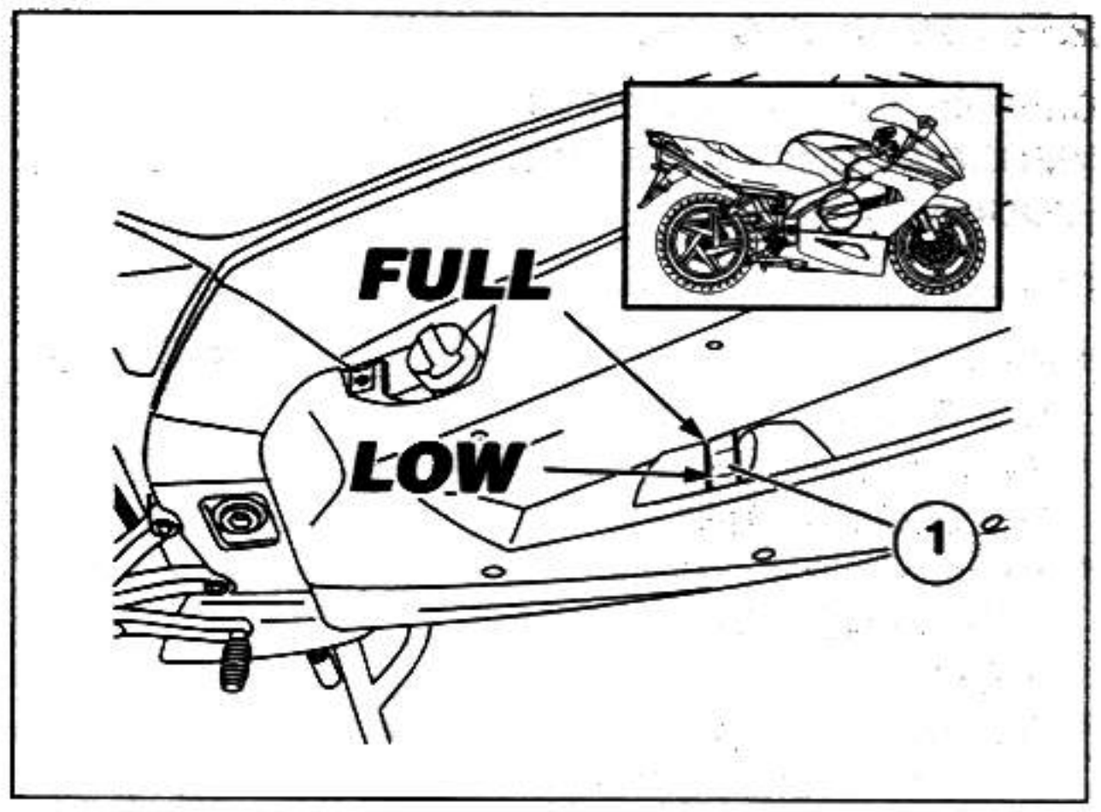

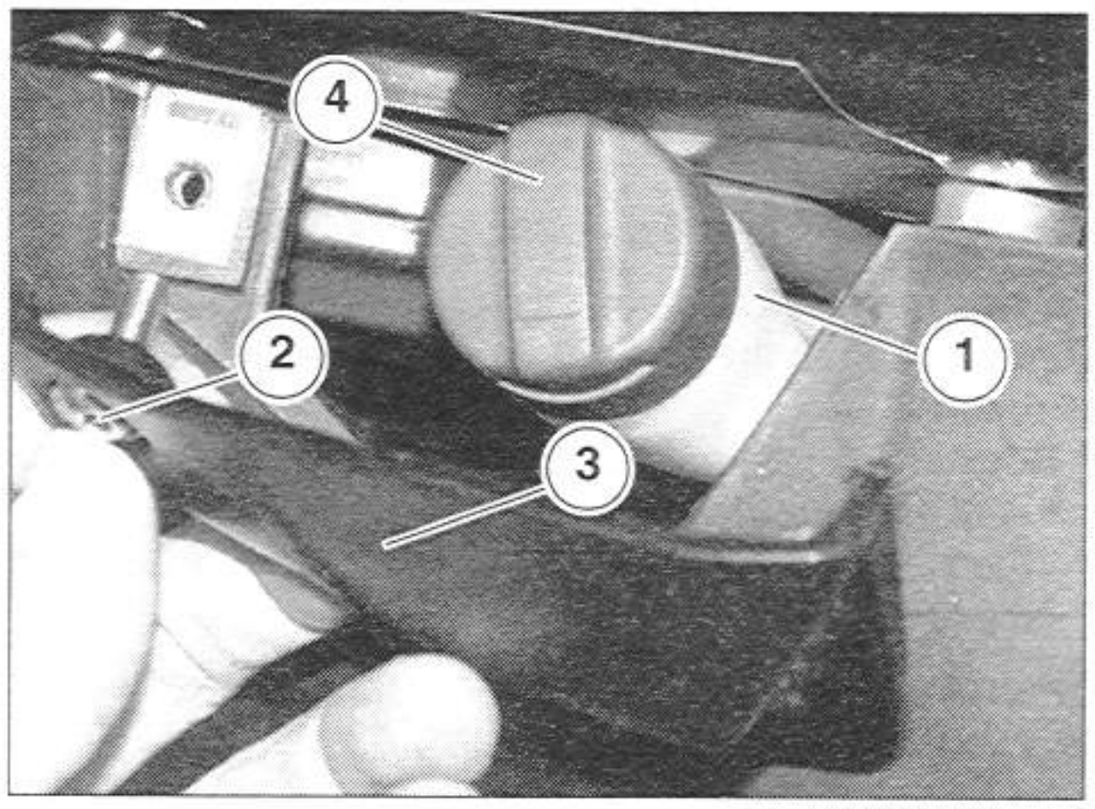

2.15 CHANGING THE COOLANT

Carefully read 1.3.9 (PRECAUTIONS AND GENERAL INFORMATION), 1.4.6 (COOLANT) and sect. 5 (COOLING SYSTEM).

Change the coolant every 2 years.

- Remove the right air duct, see 7.1.31 (REMOVING THE RIGHT AIR DUCT).
- Remove the lower fairing, see 7.1.33 (REMOVING THE LOWER FAIRING).
- Remove the front spray-guard, see 7.1.32 (REMOVING THE FRONT FAIRING LOWER LOCKUP).
- Remove the expansion tank, see 5.8 (REMOVING THE EXPANSION TANK).
- Place a container (2) under the drain plug (1) to catch the coolant; (capacity greater than 2.6 quarts).
- Unscrew and remove the drain plug (1) and retrieve the aluminum washer.

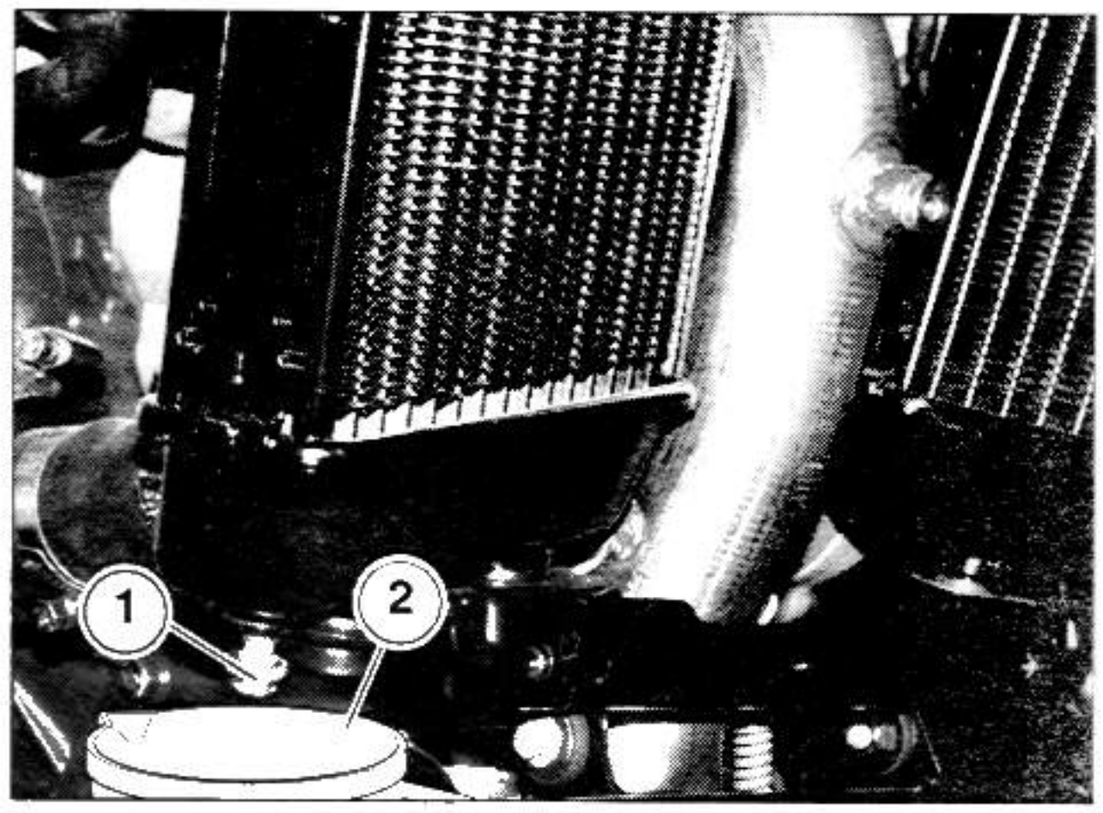

⚠ WARNING

Do not remove the filler cap (3) while the engine is warm, because the coolant is under pressure at high temperatures.

- Remove the filler cap (3) to allow the fluid to flow more freely from the system.
- When all of the fluid has drained out, empty the left radiator.

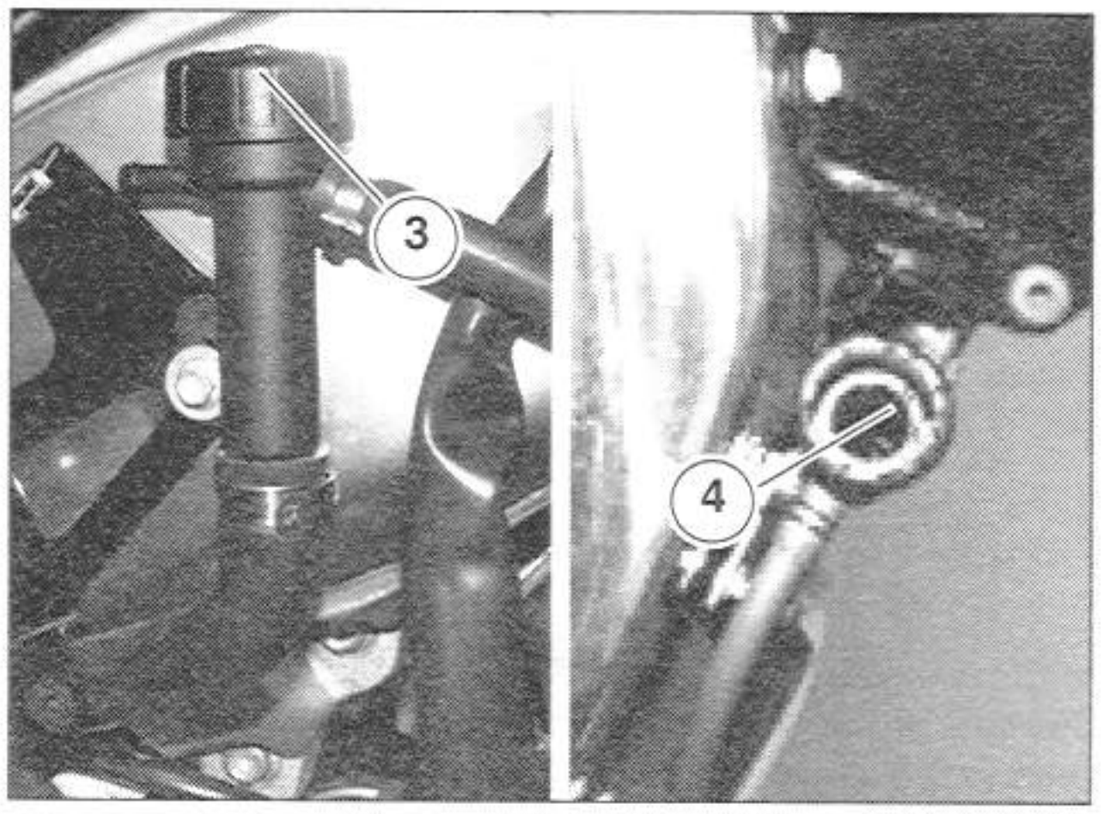

DISPOSE OF THE FLUID IN COMPLIANCE WITH ENVIRONMENTAL REGULATIONS.

NOTE When reassembling apply LOCTITE® 572 to the thread of the two radiator drain plugs.

- ★ Reassemble the drain plug (1) with a new aluminum washer.

Tightening torque for drain plug (1): 7.3 ftlb (10 Nm).

- Reassemble the expansion tank.
- Top up from the filler neck (4) until full.
- Squeeze and release the radiator hoses (5-6) a few times to create a slight pressure and
- enable the coolant to flow into the hoses.
- Top up again until full.

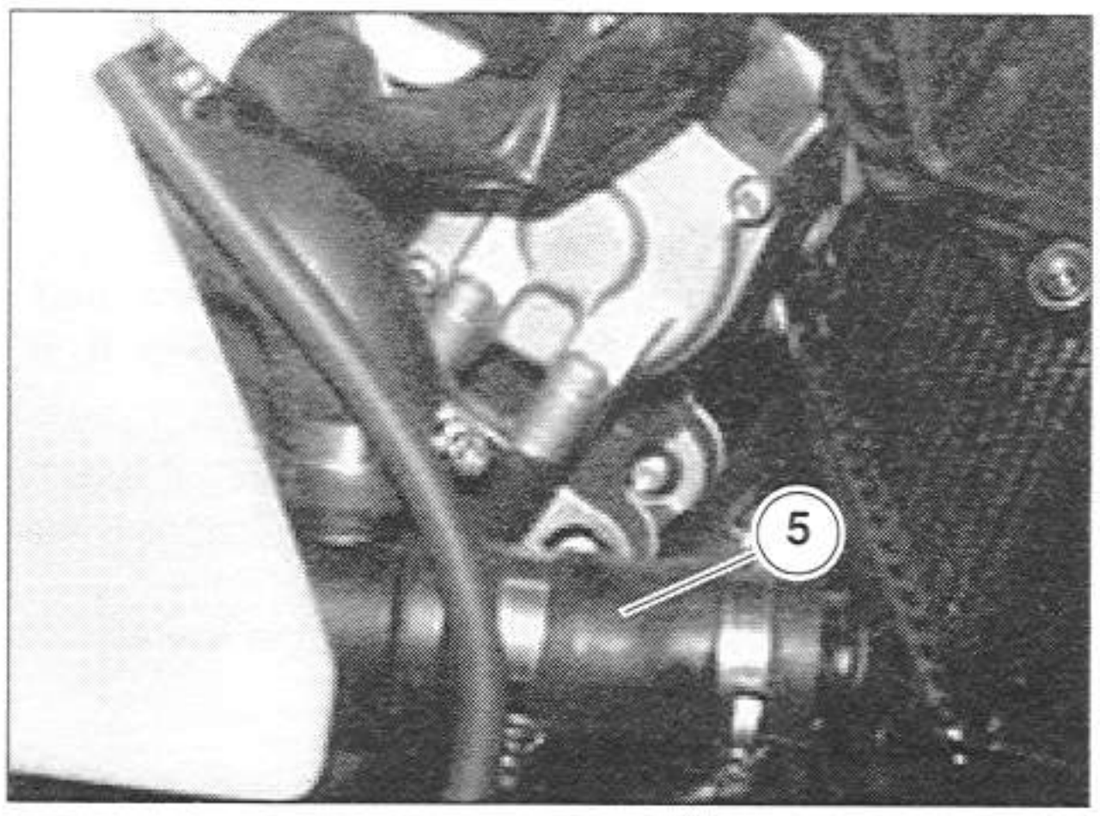

NOTE The right level has been reached when the level of fluid stabilizes just below the filler neck (4).

- Replace the filler cap (3).
- Top up to restore the proper level of fluid in the expansion tank, see 2.14 (CHECKING AND TOPPING UP THE COOLANT).
- Start the engine and let it run until the cooling fan kicks in. Let it cool, then check the level of fluid in the expansion tank again.
- Top up if necessary, see 2.14 (CHECKING AND TOPPING UP THE COOLANT).

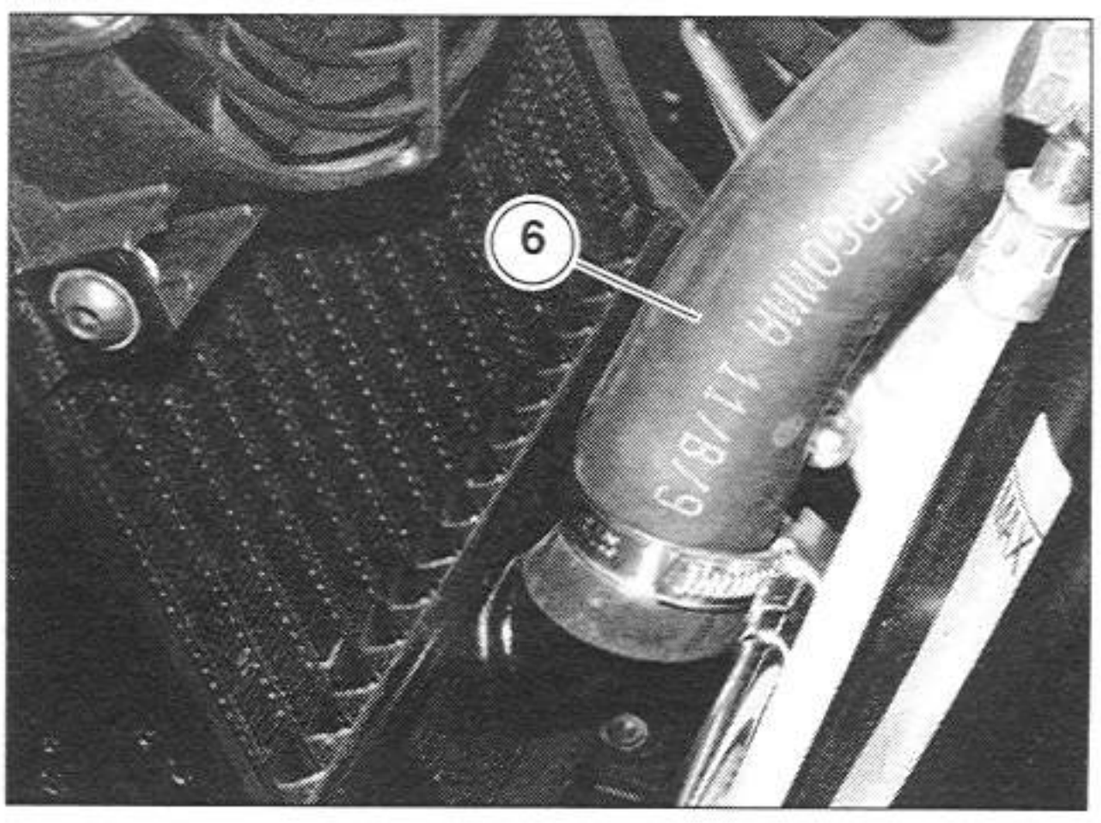

Total amount:

0.66 gal (2.6 quarts) (including the expansion tank).

NOTE It is not necessary to bleed the cooling system on this vehicle.

2.16 CHECKING AND TOPPING UP THE FRONT BRAKE FLUID

Carefully read see 1.3.9 (PRECAUTIONS AND GENERAL INFORMATION) and 1.3.5 (BRAKE FLUID).

Check the brake fluid every 4687 mi (7500 km) or 8 months, and change it every two years.

⚠ WARNING

If you notice that the brake lever has excessive free play, any sponginess or air bubbles in the system, bleed the brake system, see 2.19 (BLEEDING THE BRAKE SYSTEMS).
Brake fluid will damage the painted and plastic surfaces.
Before riding, inspect the lines to make sure they are not twisted or cracked, and that the fittings do not leak.
Do not use or mix together different types of fluids with a silicone or petroleum base.
Do not use brake fluid taken from old containers or those that have been left standing open.
Take care to prevent water and dust from accidentally entering the system.

CHECK

NOTE Place the vehicle on the center stand on a flat, hard surface.

- Turn the handlebar all the way to the right.
- Make sure the fluid contained in the reservoir exceeds the **"MIN"** mark.

MIN = minimum level.
MAX = maximum level.

- If the fluid does not at least reach the **"MIN"** mark, top up the reservoir.

TOPPING UP

⚠ WARNING

Danger of brake fluid leaking.
Do not operate the front brake lever with the screw (1) loose or, especially, with the cover of the brake fluid reservoir removed. This can cause fluid to squirt a great distance, even into your eyes. Failure to observe this warning could result in serious physical injury.

- Use a short Philips screwdriver to unscrew the screw (1) of the brake fluid reservoir (3).

⚠ WARNING

Do not unscrew the screw (2) with the handlebar wheel turned to the right, as fluid will leak out.

- Turn the handlebar all the way to the left.
- Unscrew the screw (2).

⚠ WARNING

Avoid prolonged exposure of the brake fluid to open air.
The brake fluid is hygroscopic and absorbs moisture in contact with air.
Leave the brake fluid reservoir open ONLY as long as necessary for topping up.

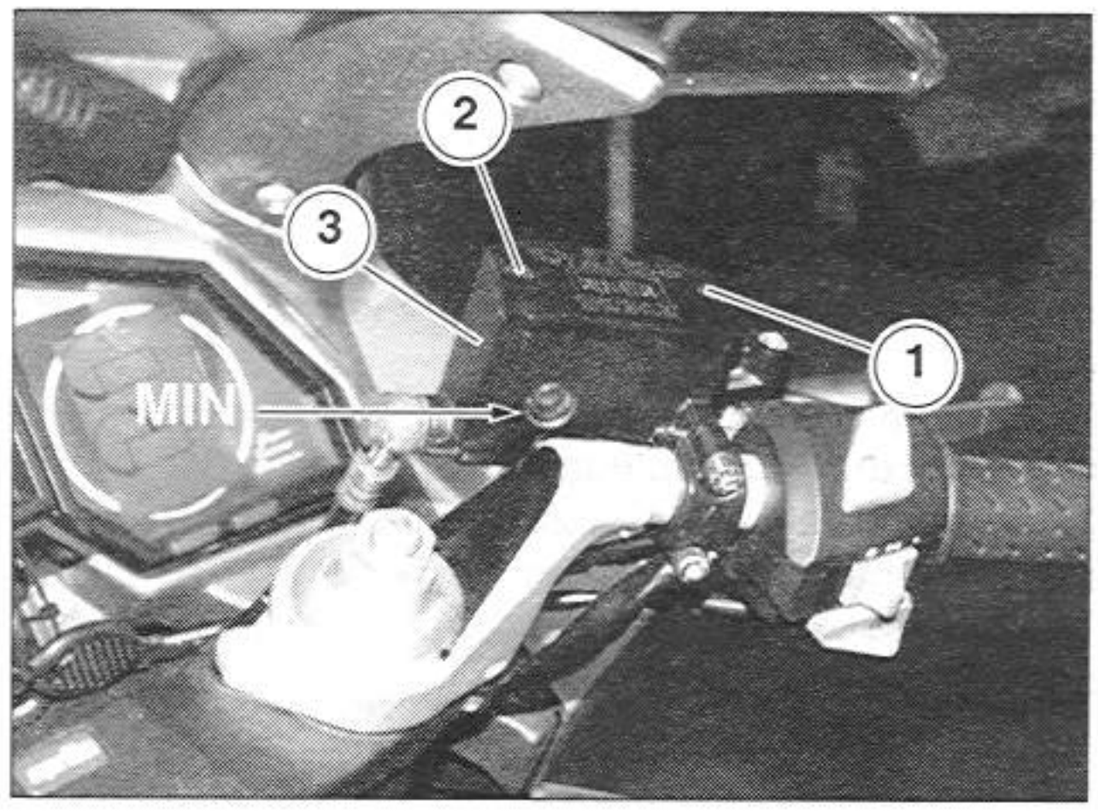

- Raise and remove the cover (4) complete with screws (1-2).
- Recover the guide cover (5).
- Remove the gasket (6).

NOTE Avoid shaking the vehicle to keep from spilling brake fluid while topping up.

⚠ WARNING

Do not add additives or other substances to the fluid. If using a funnel or other tool, make sure it is perfectly clean. .

NOTE As a reference point for reaching the **"MAX"** level, top up just until the edge of the glass (7) is covered, with the rim of the brake fluid reservoir parallel to the ground.

- Top up the reservoir (3) with brake fluid, see 1.12 (LUBRICANT CHART) until you have reached the right level between the two markers, **"MIN"** and **"MAX"**

⚠ WARNING

Never top up past the "MAX" level. Top up to "MAX" only when new pads are installed. The level of fluid gradually decreases as the pads become worn.

- To reassemble the components, follow the procedure in reverse order.

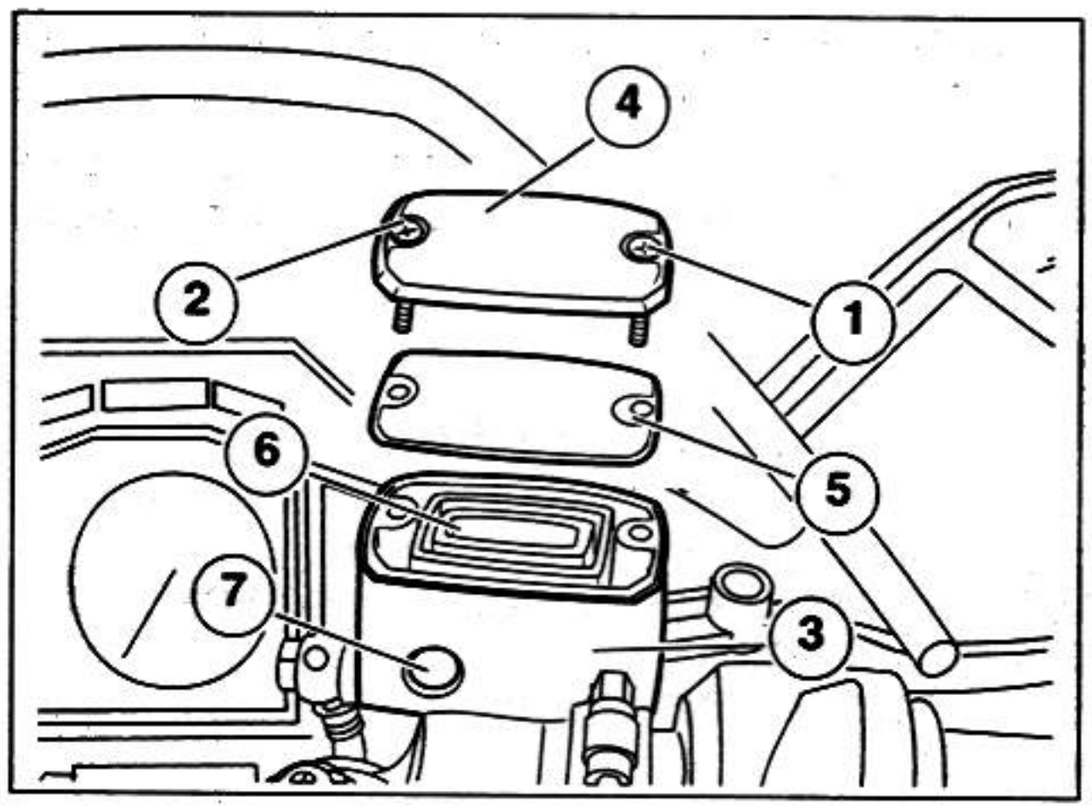

2.17 CHECKING AND TOPPING UP THE REAR BRAKE FLUID

Carefully read 1.3.9 (PRECAUTIONS AND GENERAL INFORMATION) and 1.3.5 (BRAKE FLUID).

Check the brake fluid every 4687 mi (7500 km) or 8 months, and change it every two years.

⚠ WARNING

If you notice that the brake lever has excessive free play, any sponginess or air bubbles in the system, bleed the brake system, see 2.19 (BLEEDING THE BRAKE SYSTEMS).
Brake fluid will damage the painted and plastic surfaces.
Before riding, inspect the lines to make sure they are not twisted or cracked, and that the fittings do not leak.
Do not use or mix together different types of fluids with a silicone or petroleum base.
Do not use brake fluid taken from old containers or those that have been left standing open.
Take care to prevent water and dust from accidentally entering the system.

CHECK

NOTE Place the vehicle on the center stand on a flat, hard surface.

- Make sure the fluid contained in the reservoir exceeds the **"MIN"** mark.

MIN = minimum level.
MAX = maximum level.

- If the fluid does not at least reach the **"MIN"** mark, top up the reservoir.

TOPPING UP

⚠ WARNING

Danger of brake fluid leaking.
Do not operate the rear brake lever with the brake fluid reservoir cap loosened or removed.

⚠ DANGER

Avoid prolonged exposure of the brake fluid to open air.
The brake fluid is hygroscopic and absorbs moisture in contact with air.
Leave the brake fluid reservoir open ONLY as long as necessary for topping up.

- Use a short Philips screwdriver to unscrew the two screws (1) of the brake fluid reservoir (2).
- Raise and remove the cover (3) complete with screws (1) and gasket (4).

NOTE To keep from spilling brake fluid while topping up, keep the fluid in the reservoir parallel to the reservoir rim (horizontal).

⚠ WARNING

Do not add additives or other substances to the fluid. If using a funnel or other tool, make sure it is perfectly clean.

- Top up the reservoir (1) with brake fluid, see 1.12 (LUBRICANT CHART) until you have reached the right level between the two markers, **"MIN"** and **"MAX"**

⚠ WARNING

Top up to "MAX" only when new pads are installed. The level of fluid gradually decreases as the pads become worn.

- To reassemble the components, follow the procedure in reverse order.

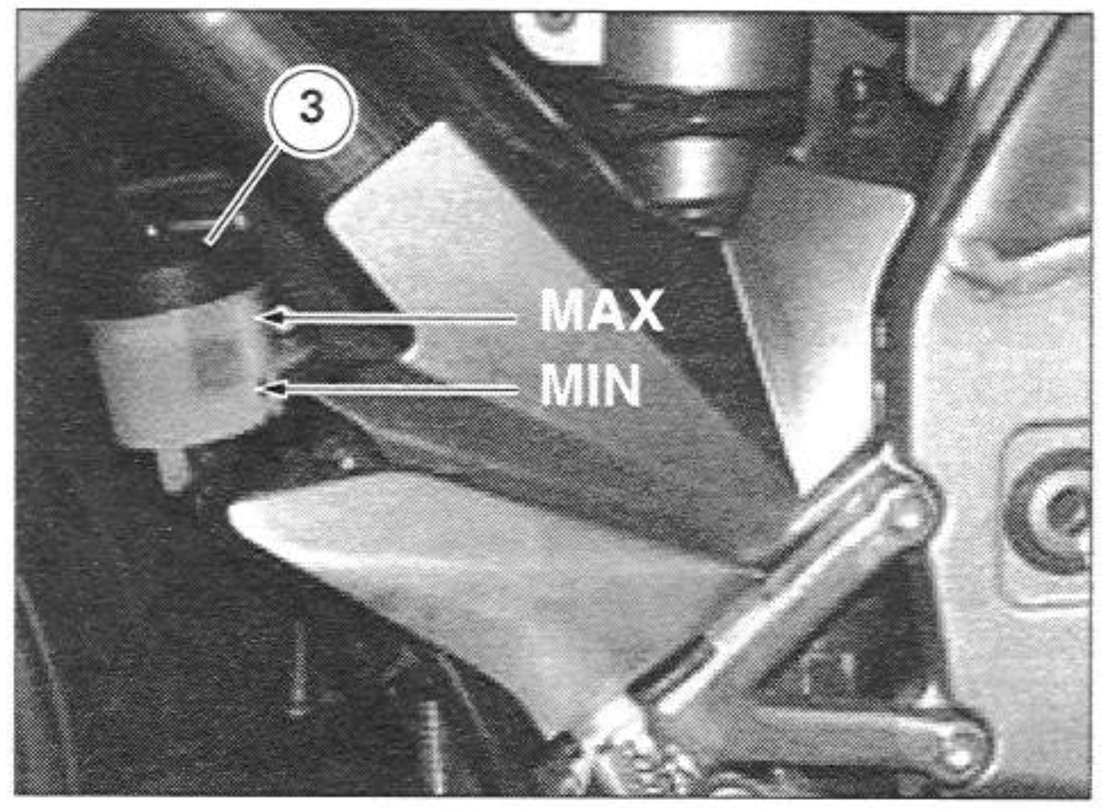

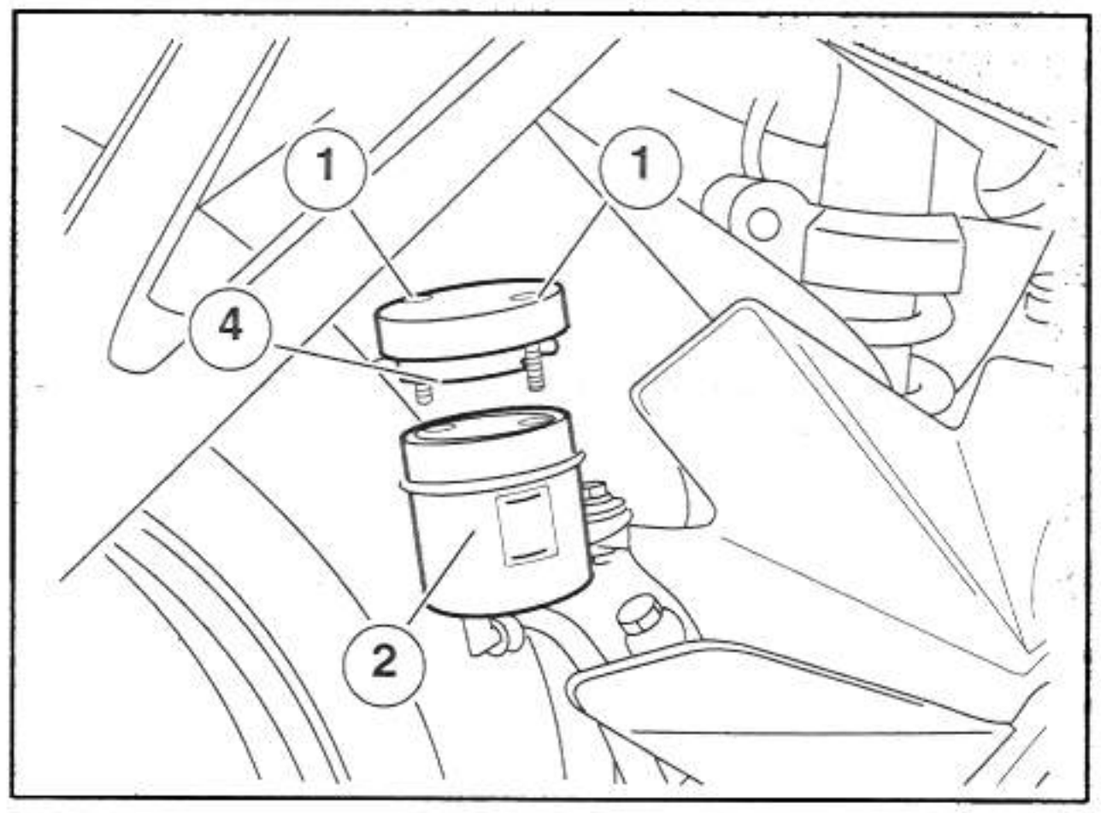

2.18 CHECKING AND TOPPING UP THE CLUTCH FLUID

Carefully read 1.3.9 (PRECAUTIONS AND GENERAL INFORMATION) and 1.4.5 (CLUTCH CONTROL FLUID).

Check the clutch fluid every 7500 km (4687 mi) or 8 months, and change it every two years.

⚠ WARNING

If you notice that the clutch lever has excessive free play, any sponginess or air bubbles in the system, bleed the clutch system, see 2.20 (CLUTCH CONTROL SYSTEM BLEEDING).
Clutch fluid will damage the painted and plastic surfaces.
Before riding, inspect the lines to make sure they are not twisted or cracked, and that the fittings do not leak.
Do not use or mix together different types of fluids with a silicone or petroleum base.
Do not use clutch fluid taken from old containers or those that have been left standing open.
Take care to prevent water and dust from accidentally entering the system.

CHECK

NOTE Place the vehicle on the center stand.

- Turn the handlebar all the way to the left.
- Make sure the fluid contained in the reservoir exceeds the **"MIN"** mark.

MIN = minimum level.
MAX = maximum level.

- If the fluid does not at least reach the **"MIN"** mark, top up the reservoir.

TOPPING UP

⚠ WARNING

Danger of fluid leaking.
Do not operate the clutch lever with the fluid reservoir cap loosened or removed. This can cause fluid to squirt a great distance, even into your eyes. Failure to observe this warning could result in serious physical injury.

⚠ DANGER

Avoid prolonged exposure of the clutch fluid to open air.
The clutch fluid is hygroscopic and absorbs moisture in contact with air.
Leave the clutch fluid reservoir open ONLY the time necessary for topping up.

⚠ WARNING

Place a cloth under the clutch fluid reservoir to catch any spills.

- Turn the handlebar all the way to the left.
- Use a short Philips screwdriver to unscrew the screw (1).

⚠ WARNING

Do not unscrew the screw (2) with the handlebar wheel turned to the left, as fluid will leak out.

- Turn the handlebar all the way to the right.
- Unscrew the screw (2).

⚠ WARNING

Avoid shaking the vehicle to keep from spilling fluid while topping up.
Do not add additives or other substances to the fluid.
If using a funnel or other tool, make sure it is perfectly clean.

- Raise and remove the cover (3) complete with screws (1-2).
- Remove the gasket (4).
- Top up the reservoir (5) with clutch fluid, see 1.12 (LUBRICANT CHART) until you have reached the right level between the two markers, **"MIN"** and **"MAX"**.

Never top up past the "MAX" level.

- To reassemble the components, follow the procedure in reverse order.

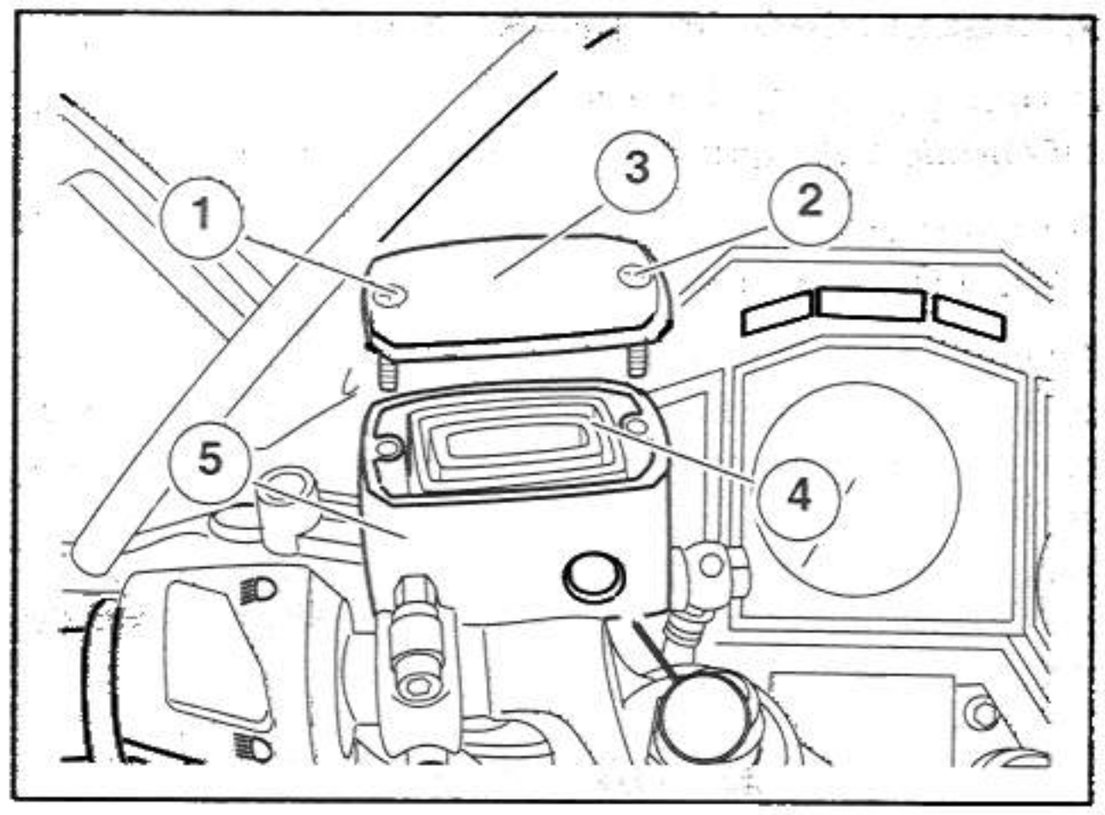

2.19 BLEEDING THE BRAKE SYSTEMS

Carefully read 1.3.9 (PRECAUTIONS AND GENERAL INFORMATION) and 1.3.5 (BRAKE FLUID).

For the maintenance intervals, see 2.1.1 (SCHEDULED MAINTENANCE CHART).

If there is air in the brake hydraulic system, it will act as a cushion, absorbing the pressure developed by the master cylinder. This will severly limit the effectiveness of the brakes.
You can tell when air is present, because the brake control will feel spongy and braking effectiveness will be reduced.

⚠ DANGER

After servicing the brakes, always check them for function. If the stroke of the lever or pedal is excessive, or if you detect that the effectiveness of the brakes is reduced in any way, may be necessary to bleed the system, or there may be some other problem with the brake system.

Never ride your vehicle in traffic immediately after servicing the brakes. Always apply the brake pedal or lever several times before riding your vehicle. Then, try your vehicle in a parking lot or other safe area with little traffic to ensure that the brakes are working properly. Failure to observe this warning can lead to a serious accident with subsequent serious injury or death.

DISPOSE OF THE FLUID IN COMPLIANCE WITH ENVIRONMENTAL REGULATIONS.

KEEP OUT OF REACH OF CHILDREN.

⚠ WARNING

Handle brake fluid with care. Especially do not spill it on painted or plastic parts. It can irreparably damage the finish of such parts. It is also destructive to rubber and other non-metallic materials used in the vehicle. Do not dispose of brake fluid improperly. Do not pour it into drains or storm sewers. Brake fluid should be disposed of only at an approved recycling center.

NOTE This vehicle is equipped with front and rear disc brakes, with separate hydraulic circuits.

The front brake system is double disc (right and left side).
The rear brake system is single disc (right side).

FRONT BRAKE SYSTEM

The front brake system is equipped with two bleeder nipples:
- one nipple (1) on each of the two front brake calipers.

Repeat the BLEEDING OPERATIONS on both nipples (1).

REAR BRAKE SYSTEM

The rear brake system is equipped with a single bleeder nipple (2), on the rear brake caliper.

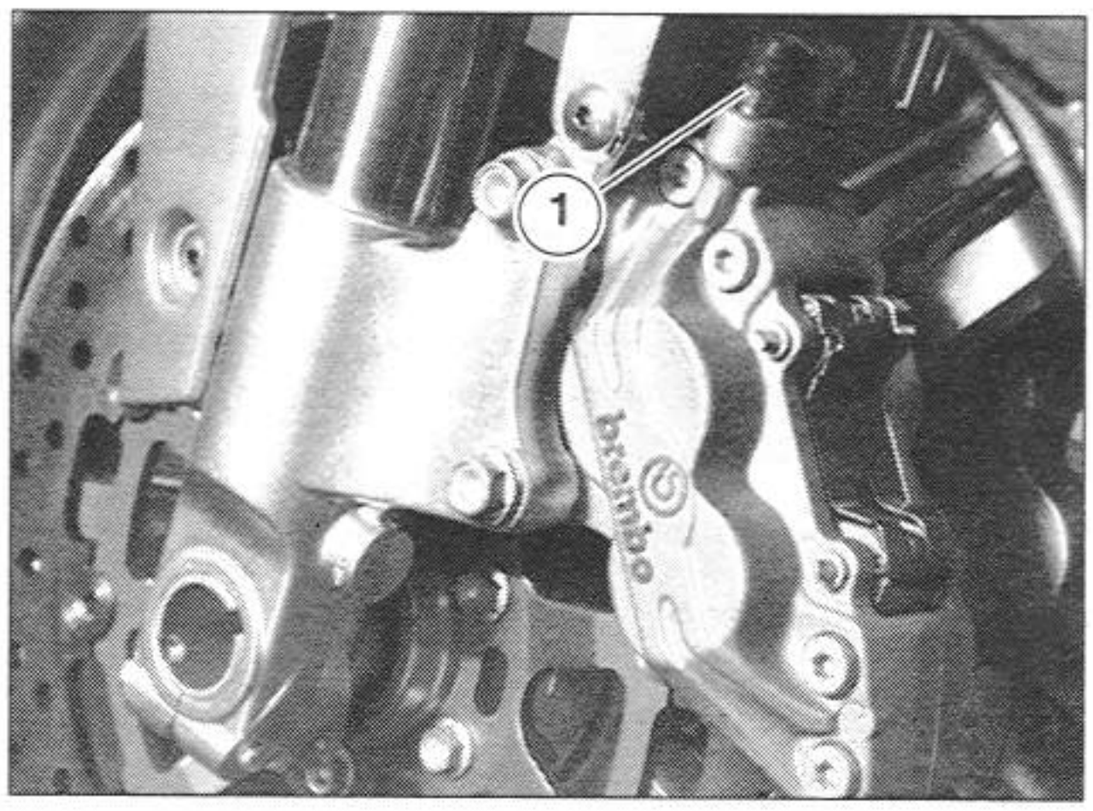

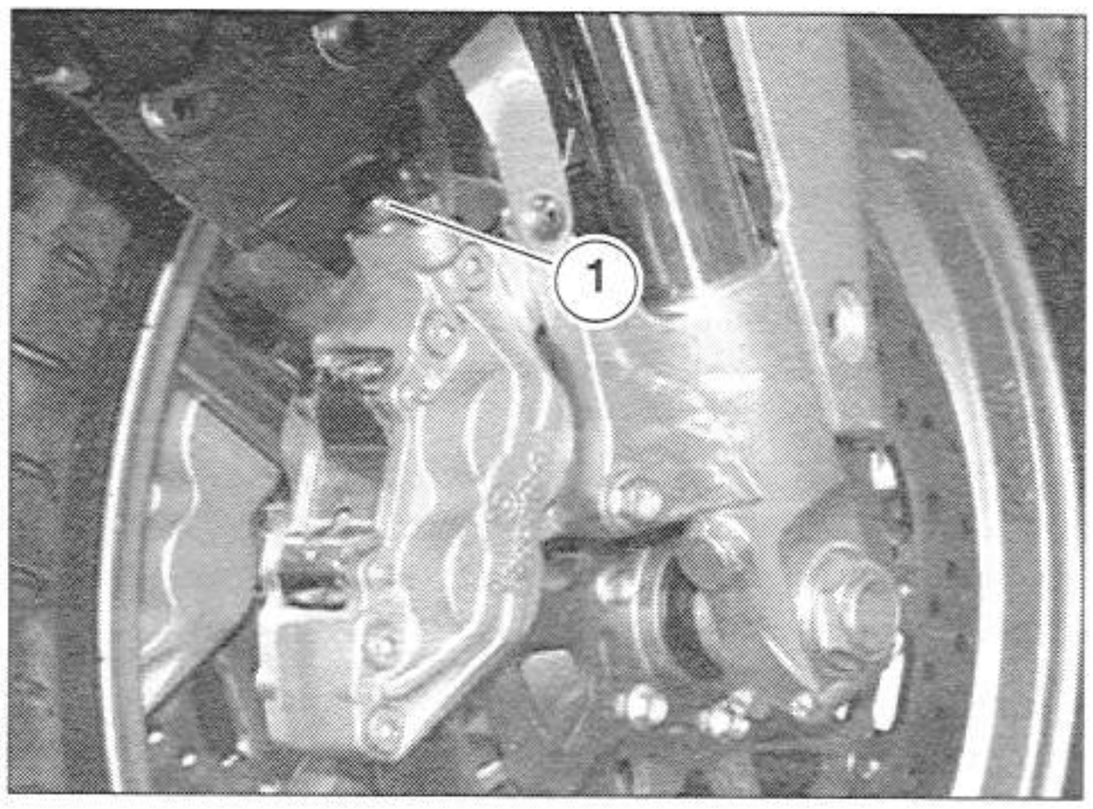

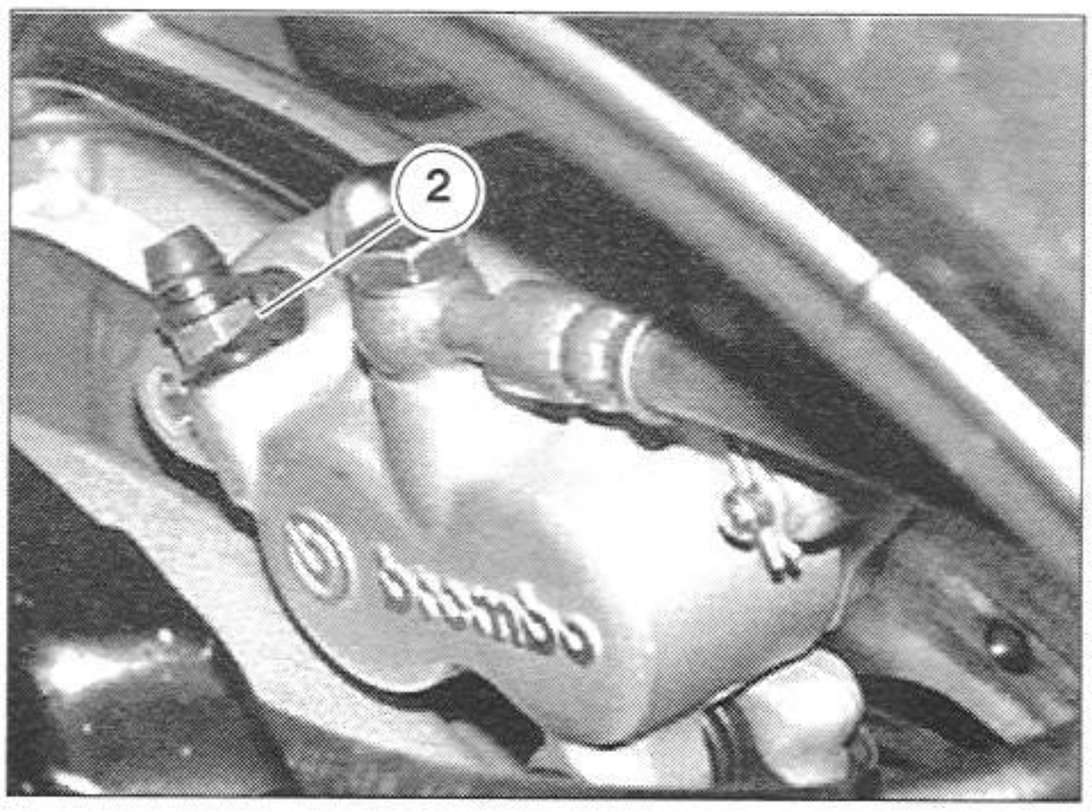

BLEEDING OPERATIONS

There are three types of bleeding procedures, to be carried out in the order listed below:
1st BRAKE SYSTEM BLEEDING

NOTE The description of the system bleeding procedures also includes instructions on how to determine whether it is necessary to bleed the brake caliper and the brake master cylinder.
2nd BRAKE CALIPER BLEEDING
3rd BRAKE MASTER CYLINDER BLEEDING

⚠ WARNING

Do not reverse the above order. To do so will result in improper bleeding of the brakes. Follow the instructions exactly. Failure to heed this warning can lead to failure of the brake system, with subsequent serious accident, serious injury, or even death.

GENERAL RULES

Before proceeding, make sure that:

NOTE Carry out the bleeding procedures with the vehicle placed on the side stand and only on a firm, flat surface.

A the master cylinder must be higher than any line or caliper (C);
B the fluid reservoir must be higher than the master cylinder (A);
C the caliper bleeder nipple (1-2) is higher than the caliper itself;
D the brake line has no bends in the shape of an overturned "U".

NOTE To bleed the rear brake system you must first remove the rear brake caliper, see 7.6.2 (REMOVING THE REAR BRAKE CALIPER).

- Top up the brake fluid in the reservoir, see 2.16 (CHECKING AND TOPPING UP THE FRONT BRAKE FLUID) and 2.17 (CHECKING AND TOPPING UP THE REAR BRAKE FLUID).
- Remove the dust cover.
- Fit a piece of transparent plastic tubing over the clamp bleeder nipples (1-2), and insert the other end into a container.
- Squeeze and release the brake lever several times, and then hold it fully squeezed.
- Loosen the bleeder nipple by 1/4 turn so that the brake fluid flows into the container; this will eliminate tension from the brake lever and bring it to the end of its stroke.
- Tighten the bleeder nipple, squeeze the lever several times, then hold it fully squeezed and loosen the bleeder nipple again.
- Repeat the operation until the fluid that flows into the container is completely free of air bubbles.

NOTE Fill the reservoir with brake fluid as needed while bleeding the hydraulic system. Throughout this operation, make sure brake fluid is always present in the reservoir.

- Tighten the bleeder nipple and remove the tubing.

Tightening torque for bleeder nipples (1): 6.64 ftlb (9 Nm).

Tightening torque for bleeder nipple (2): 10.33 ftlb (14 Nm).

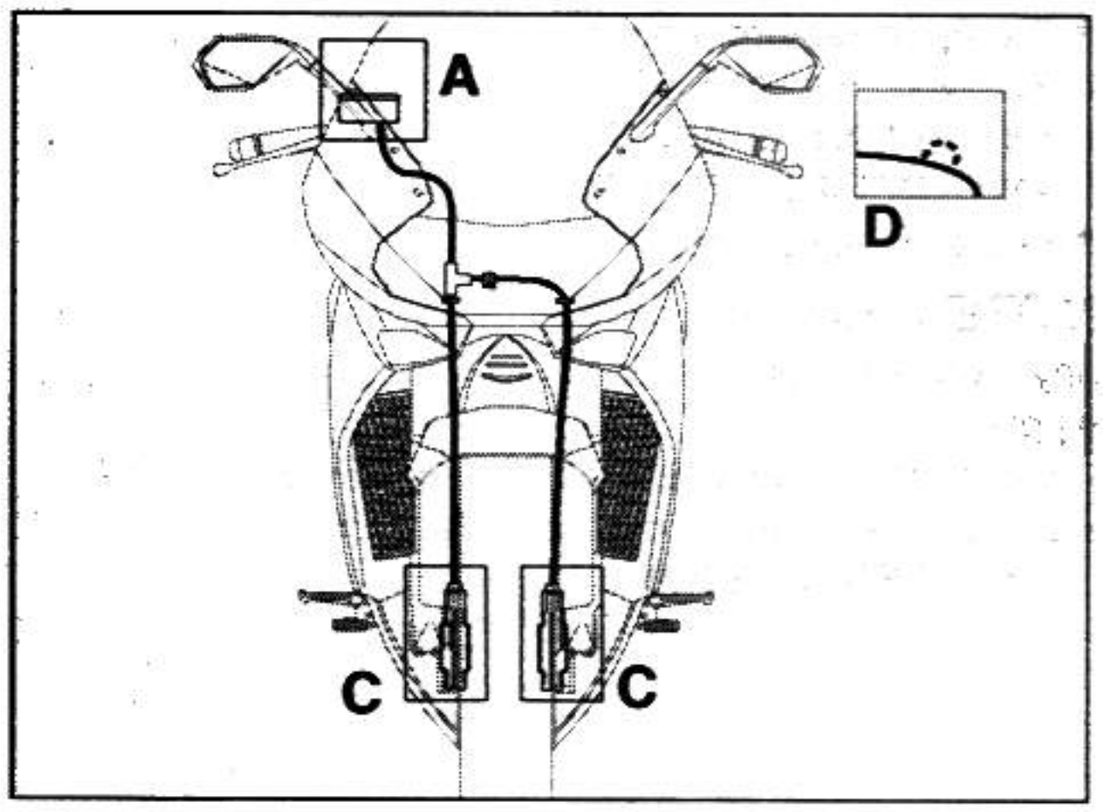

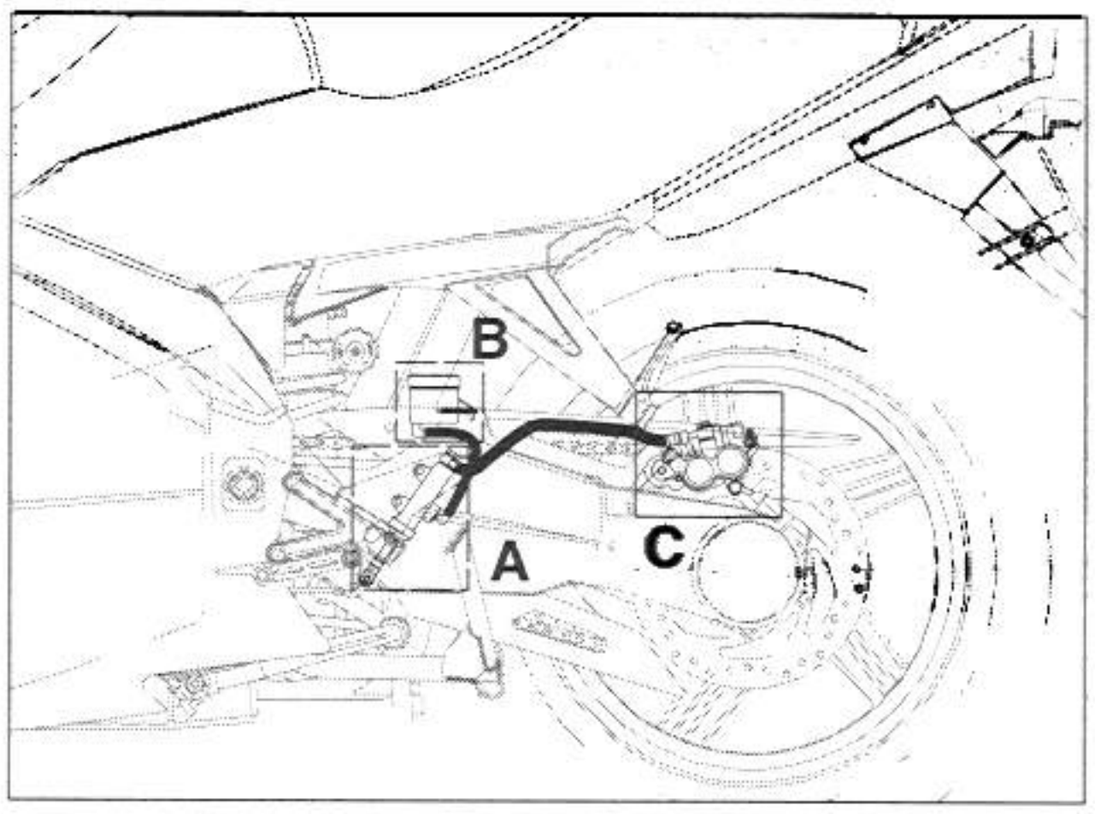

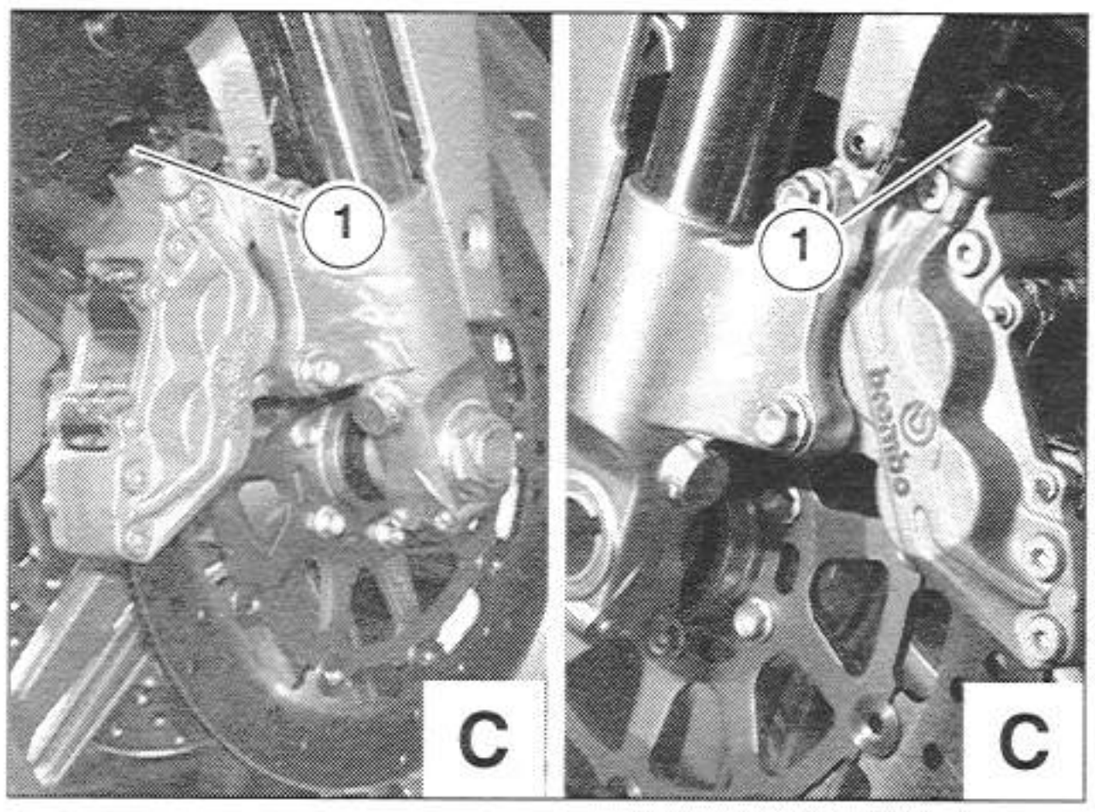

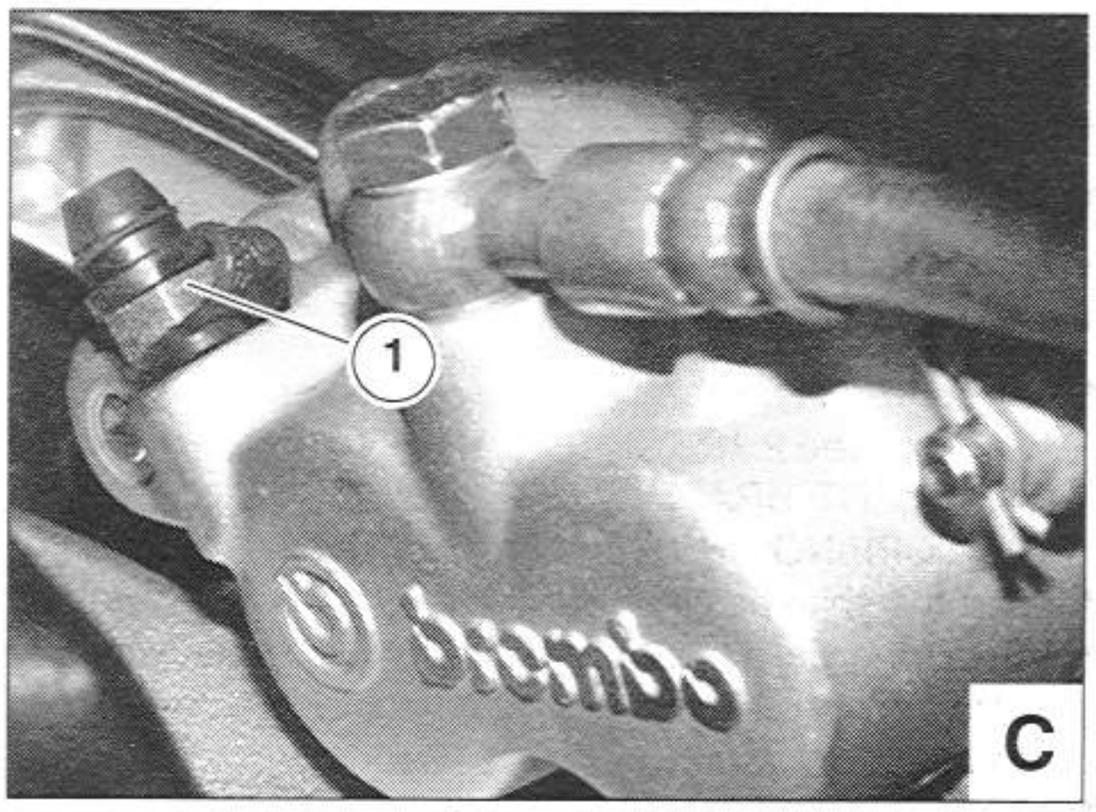

- Top up to restore the proper level of brake fluid in the reservoir, see 2.16 (CHECKING AND TOPPING UP THE FRONT BRAKE FLUID) and 2.17 (CHECKING AND TOPPING UP THE REAR BRAKE FLUID).
- Replace the dust cover.

NOTE If the lever is still spongy, even if you do not see any more air bubbles in the fluid flowing from the bleeder nipple:
- bleed the caliper, see BRAKE CALIPER BLEEDING;
- bleed the master cylinder, see BRAKE MASTER CYLINDER BLEEDING;

BRAKE CALIPER BLEEDING

NOTE Do not operate the two brake systems simultaneously. The following steps refer to a single brake system, but are applicable to both (with the variations described).
For the front brake system, carry out the steps described on both brake calipers.
Do not remove the two front brake calipers at the same time.

- **For the front brake system only:**
- partially remove the brake caliper, see 7.2.1 (REMOVING THE COMPLETE WHEEL) and position it so that the bleeder nipple (1) is higher than the caliper itself.

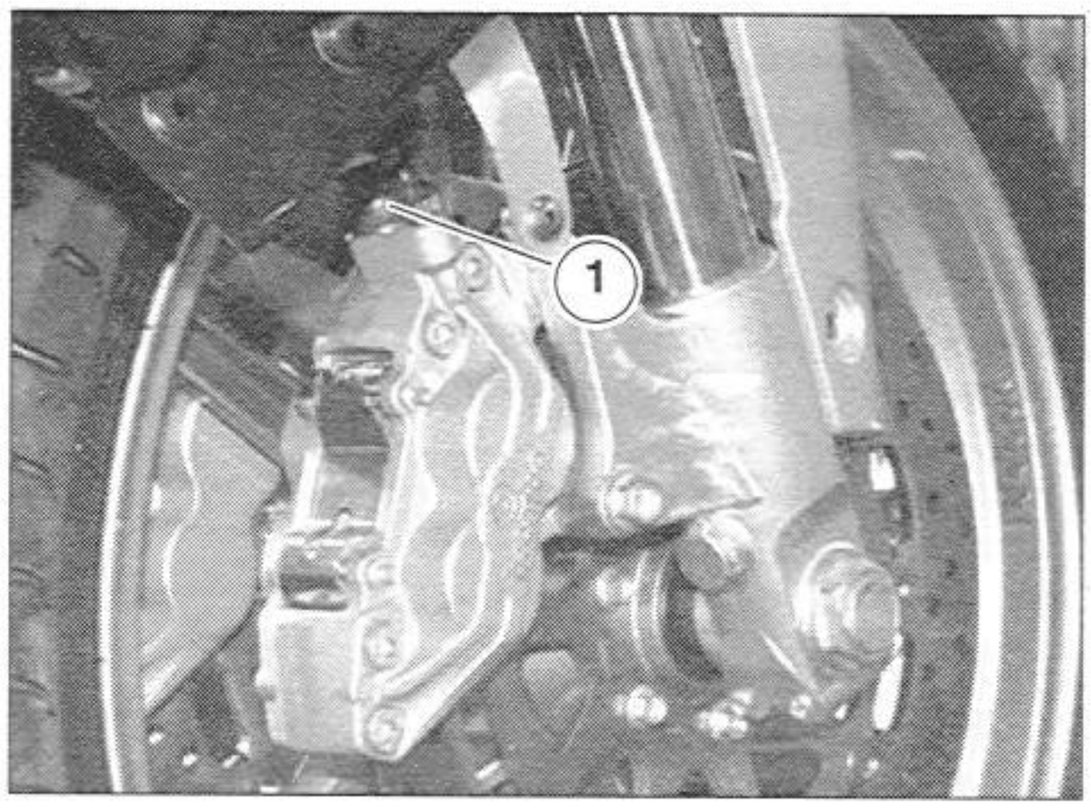

- **For the rear brake system only:**
- the rear brake caliper has already been removed during the system bleeding procedure;
- unscrew and remove the screw (3), retrieving the nut;
- you will need the help of a second mechanic to keep the brake fluid reservoir (4) higher than the master cylinder.

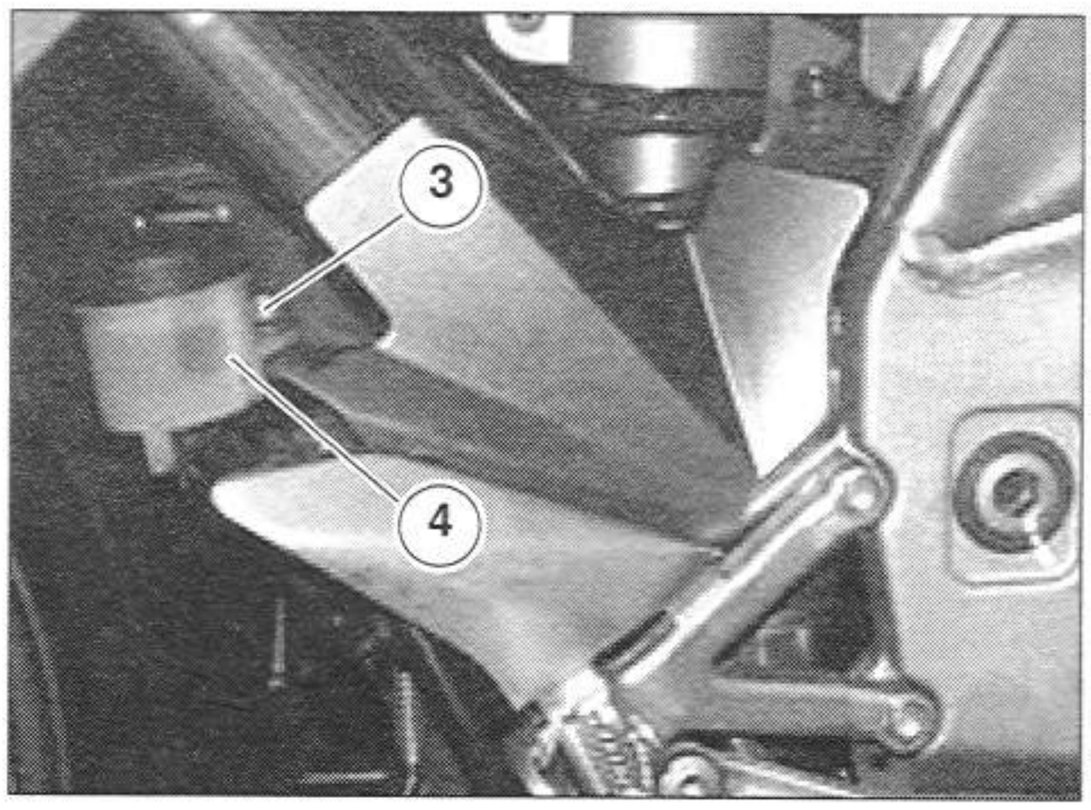

NOTE Have an (approximately 3 mm thick) shim to place between the brake pads.

- Place the shim between the pads and operate the lever a few times.
- Use the spacer or other tool to widen the caliper pistons.

⚠ WARNING

Never adjust the caliper pistons directly, always on the pads. Work gently to avoid damaging the pads.

- Simultaneously open and close the bleeder nipple.

NOTE It is important that the caliper pistons be widened and the valve opened and closed take place simultaneously.

- Top up to restore the proper level of brake fluid in the reservoir, see 2.16 (CHECKING AND TOPPING UP THE FRONT BRAKE FLUID) and 2.17 (CHECKING AND TOPPING UP THE REAR BRAKE FLUID).
- Insert the shim between the pads. Squeeze the lever.
- Spread the caliper pins again, loosening the bleeder nipple and checking whether air bubbles escape along with the fluid.
- If there are still air bubbles, repeat the procedure until there are no more bubbles in the fluid.

NOTE Fill the reservoir with brake fluid as needed while bleeding the brake caliper.
Throughout this operation, make sure brake fluid is always present in the reservoir.

BRAKE MASTER CYLINDER BLEEDING

NOTE You may now bleed the brake master cylinder using the same procedure as for bleeding the caliper.

- Place the shim between the pads and operate the lever a few times to pressurize the system.
- Use the spacer or other tool to widen the caliper pistons .

⚠ WARNING

Never adjust the caliper pistons **directly, always on the pads. Work gently to avoid damaging the pads.**

- Check whether any air bubbles escape into the reservoir along with the fluid.
- If there are still air bubbles, repeat the procedure until there are no more bubbles in the fluid.

NOTE Fill the reservoir with brake fluid as needed while bleeding the hydraulic system.
Throughout this operation, make sure brake fluid is always present in the reservoir.

- Now you can be certain that all air bubbles have been bled from the master cylinder.

2.20 CLUTCH CONTROL SYSTEM BLEEDING

Carefully read 1.3.9 (PRECAUTIONS AND GENERAL INFORMATION) and 1.4.5 (CLUTCH CONTROL FLUID).

If necessary bleed air from the system after the first 625 mi (1000 km).
Any air in the hydraulic system will act as a cushion, absorbing much of the pressure exerted by the master cylinder and limiting the effectiveness of the clutch cylinder.
You can tell when air is present because the clutch will feel "spongy", and operating capacity will be reduced.

⚠ WARNING

Handle clutch fluid with care. Especially do not spill it on painted or plastic parts. It can irreparably damage the finish of such parts. It is also destructive to rubber and other non-metallic materials used in the vehicle. Do not dispose of clutch fluid improperly. Do not pour it into drains or storm sewers. clutch fluid should be disposed of only at an approved recycling center.

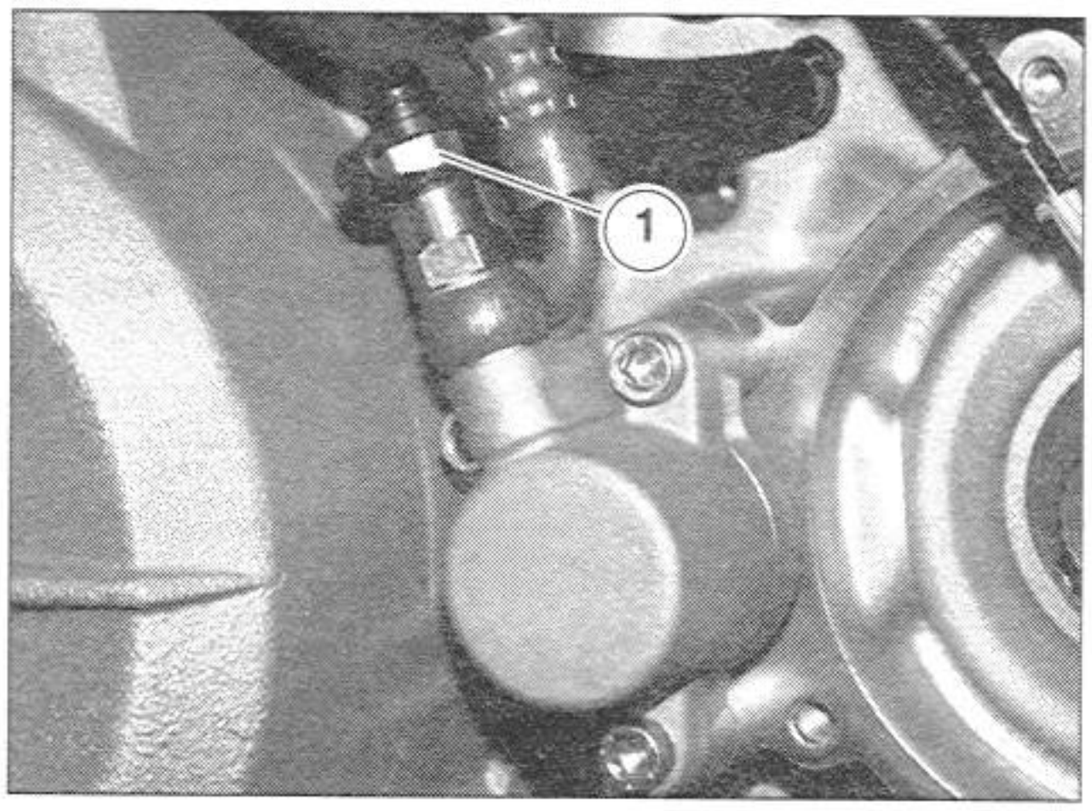

- Top up the clutch fluid in the reservoir, see 2.18 (CHECKING AND TOPPING UP THE CLUTCH FLUID).
- Remove the left fairing, see 7.1.28 (REMOVING THE SIDE FAIRINGS).
- Remove dust cover.
- Fit a piece of transparent plastic tubing over the bleeder nipple (1), and insert the other end into a container.
- Squeeze and release the lever several times, and then hold it fully squeezed.
- Loosen the bleeder nipple by 1/4 turn so that the fluid flows into the container; this will eliminate tension from the lever and bring it to the end of its stroke.
- Tighten the bleeder nipple (1), squeeze the lever several times, then hold it fully squeezed and loosen the bleeder nipple again.
- Repeat the operation until the fluid that flows into the container is completely free of air bubbles.

NOTE Fill the reservoir with clutch fluid as needed while bleeding the hydraulic system.
Throughout this operation, make sure there is always fluid present in the reservoir.

- Tighten the bleeder nipple (1) and remove the tubing.

Tightening torque for bleeder nipple (1): 6.64 ftlb (9 Nm).

- Top up to restore the proper level of clutch fluid in the reservoir, see 2.18 (CHECKING AND TOPPING UP THE CLUTCH FLUID).
- Replace the dust cover.

2.21 CHANGING THE FRONT BRAKE FLUID

Carefully read 1.3.9 (PRECAUTIONS AND GENERAL INFORMATION) and 1.3.5 (BRAKE FLUID).

Change the front brake fluid every two years.

⚠ WARNING

Handle the fluid with care: it can chemically alter paint and plastic or rubber parts, etc.
DISPOSE OF THE FLUID IN COMPLIANCE WITH ENVIRONMENTAL REGULATIONS.

- ★ Remove the dust cover.
- ★ Fit a piece of transparent plastic tubing over the bleeder nipple (1) on the clamp, and insert the other end into a container.
- ★ Loosen the bleeder nipple (1) by approximately one turn.

NOTE Throughout this operation, make sure there is always fluid present in the reservoir; otherwise, after the operation you will need to bleed the system, see 2.19 (BLEEDING THE BRAKE SYSTEMS).

- Watch the reservoir (2) as the fluid flows out and tighten the bleeder nipple (1) before it empties entirely.
- Top up the reservoir (2), see 2.16 (CHECKING AND TOPPING UP THE FRONT BRAKE FLUID).
- ★ Loosen the bleeder nipple (1) again by approximately half a turn.
- ★ Watch as the fluid flows out through the tube. As soon as you observe that the fluid flowing through the tube is clear, and no longer dark, tighten the bleeder nipple(1) again and remove the tube.

Tightening torque for bleeder nipple (1): 6.64 ftlb (9 Nm).

- ★ Replace the dust cover.
- Top up to restore the proper level of fluid in the reservoir (2), see 2.16 (CHECKING AND TOPPING UP THE FRONT BRAKE FLUID).

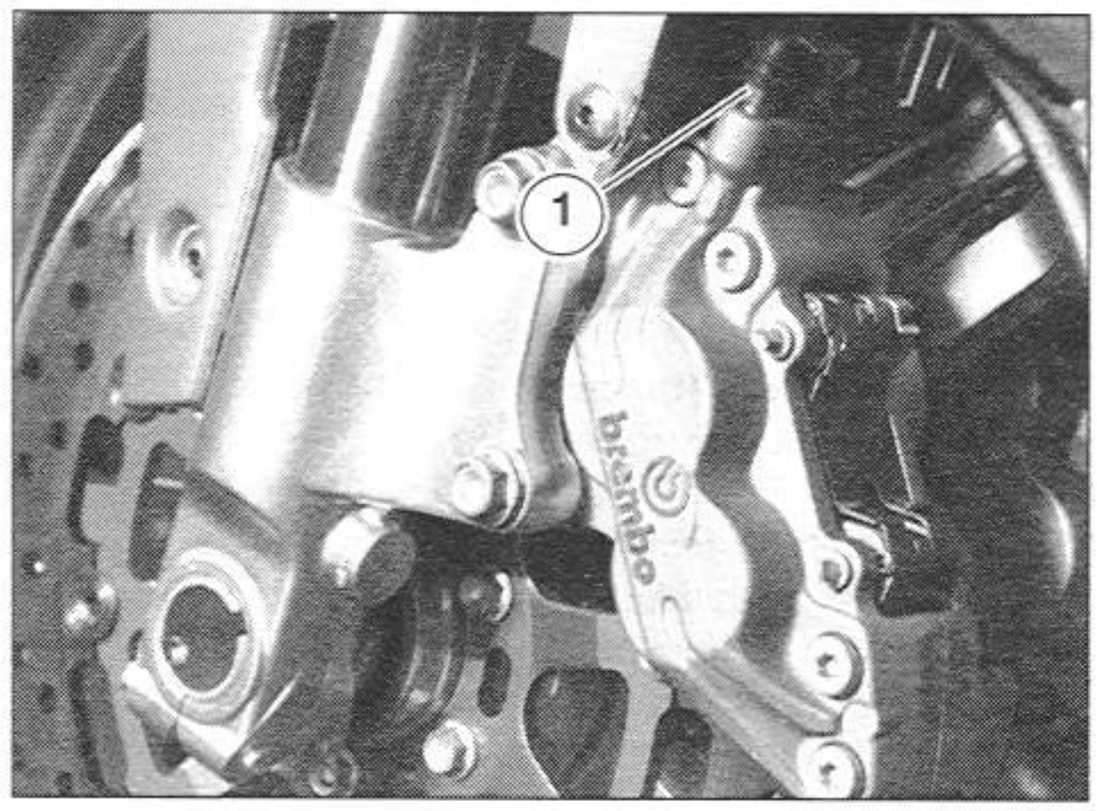

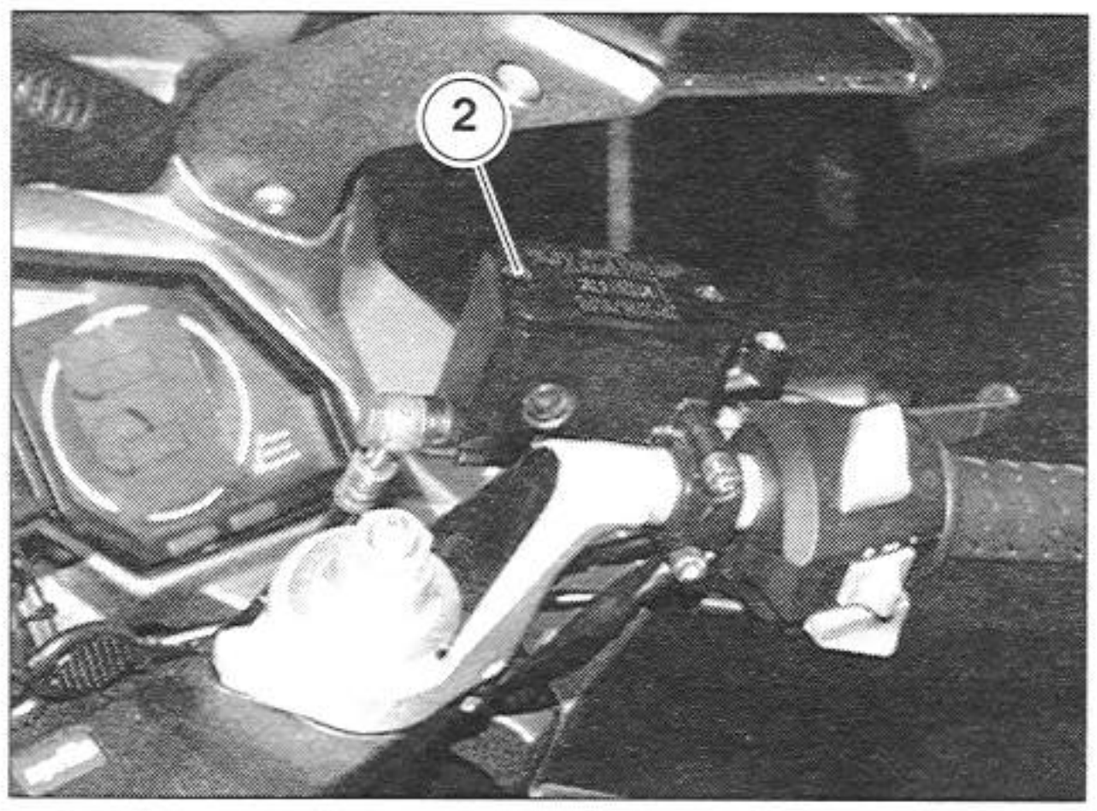

2.22 CHANGING THE REAR BRAKE FLUID

Carefully read 1.3.9 (PRECAUTIONS AND GENERAL INFORMATION) and 1.3.5 (BRAKE FLUID).

Change the rear brake fluid every two years.

⚠ WARNING

Handle the fluid with care: it can chemically alter paint and plastic or rubber parts, etc.
DISPOSE OF THE FLUID IN COMPLIANCE WITH ENVIRONMENTAL REGULATIONS.

- Remove the dust cover.
- Fit a piece of transparent plastic tubing over the bleeder nipple (1) on the clamp, and insert the other end into a container.
- Loosen the bleeder nipple (1) by approximately one turn.

NOTE Throughout this operation, make sure there is always fluid present in the reservoir (2); otherwise, after the operation you will need to bleed the system, see 2.19 (BLEEDING THE BRAKE SYSTEMS).

- Watch the reservoir (2) as the fluid flows out and tighten the bleeder nipple (1) before it empties entirely.
- Top up the reservoir (2), see 2.19 (BLEEDING THE BRAKE SYSTEMS).
- Loosen the bleeder nipple (1) by approximately half a turn.
- Watch as the fluid flows out through the tube. As soon as you observe that the fluid flowing through the tube is clear, and no longer dark, tighten the bleeder nipple(1) again and remove the tube.

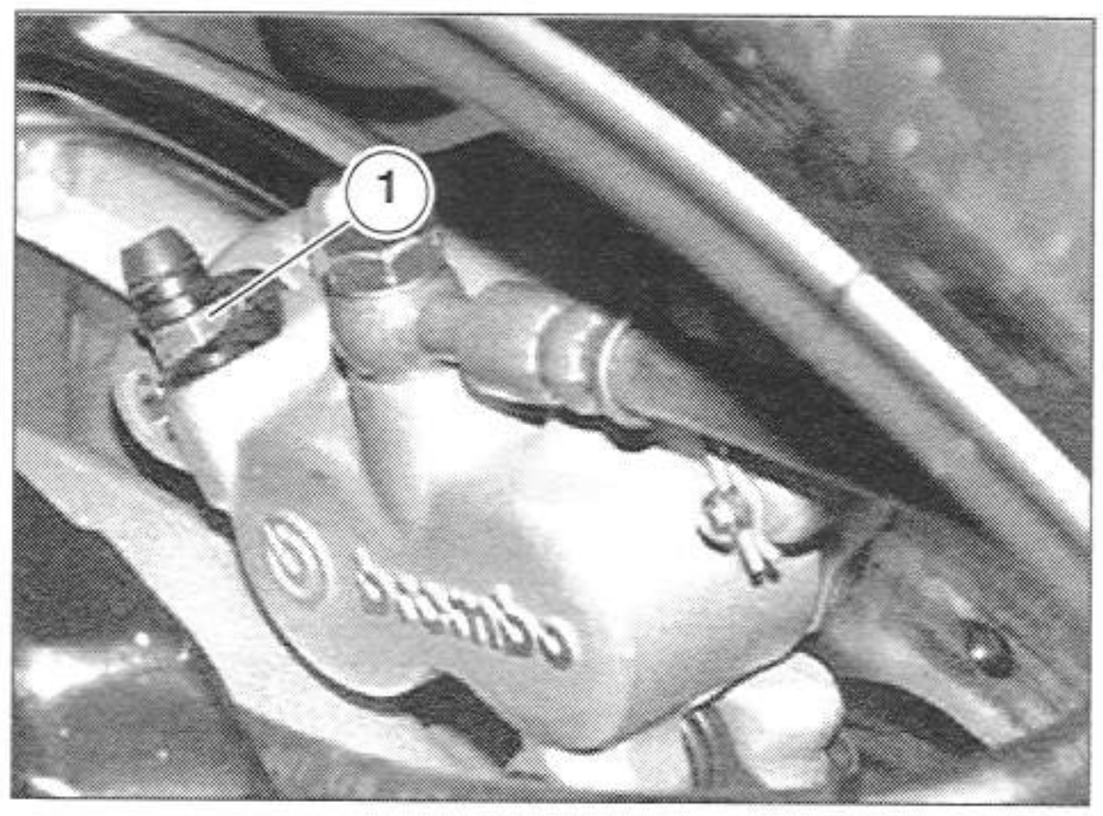

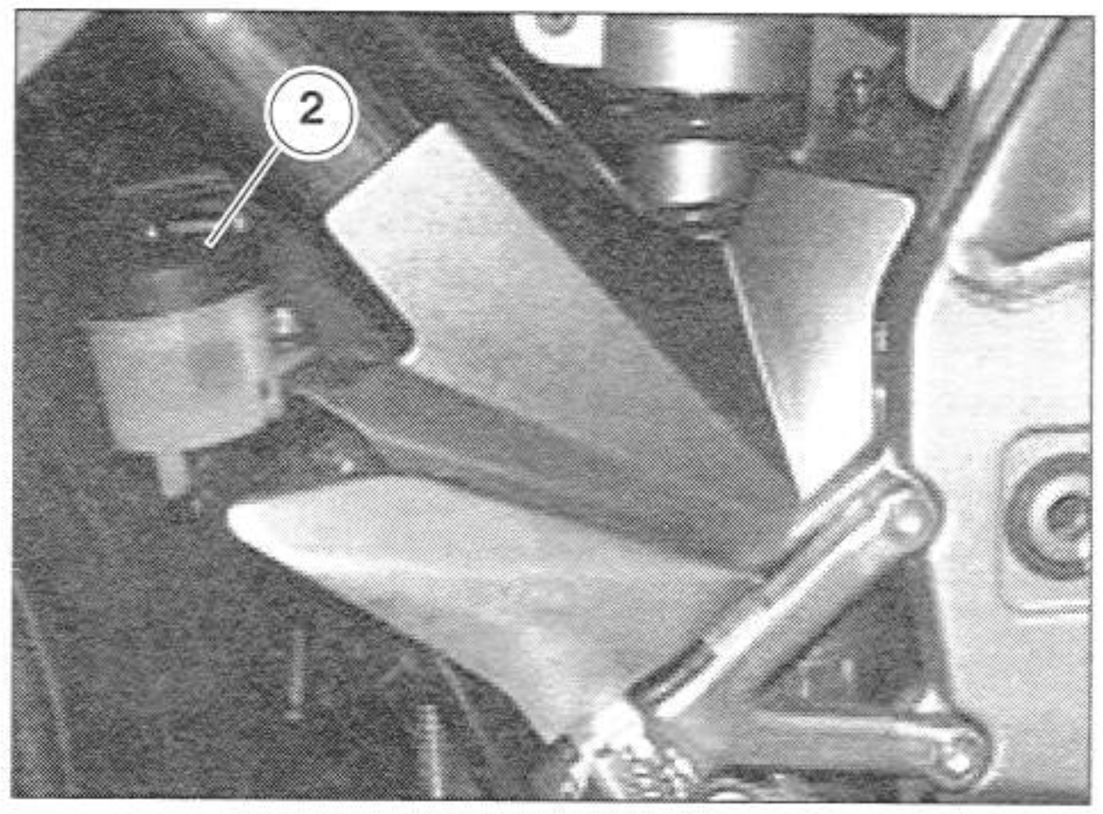

Tightening torque for bleeder nipple (1):
10.33 ftlb (14 Nm).

- Replace the dust cover.
- Top up to restore the proper level of fluid in the reservoir (2), see 2.17 (CHECKING AND TOPPING UP THE REAR BRAKE FLUID).

2.23 CHANGING THE CLUTCH FLUID

Carefully read 1.3.9 (PRECAUTIONS AND GENERAL INFORMATION) and 1.4.5 (CLUTCH CONTROL FLUID).

Change the clutch fluid every two years.

⚠ WARNING

Handle the fluid with care: it can chemically alter paint and plastic or rubber parts, etc.
DISPOSE OF THE FLUID IN COMPLIANCE WITH ENVIRONMENTAL REGULATIONS.

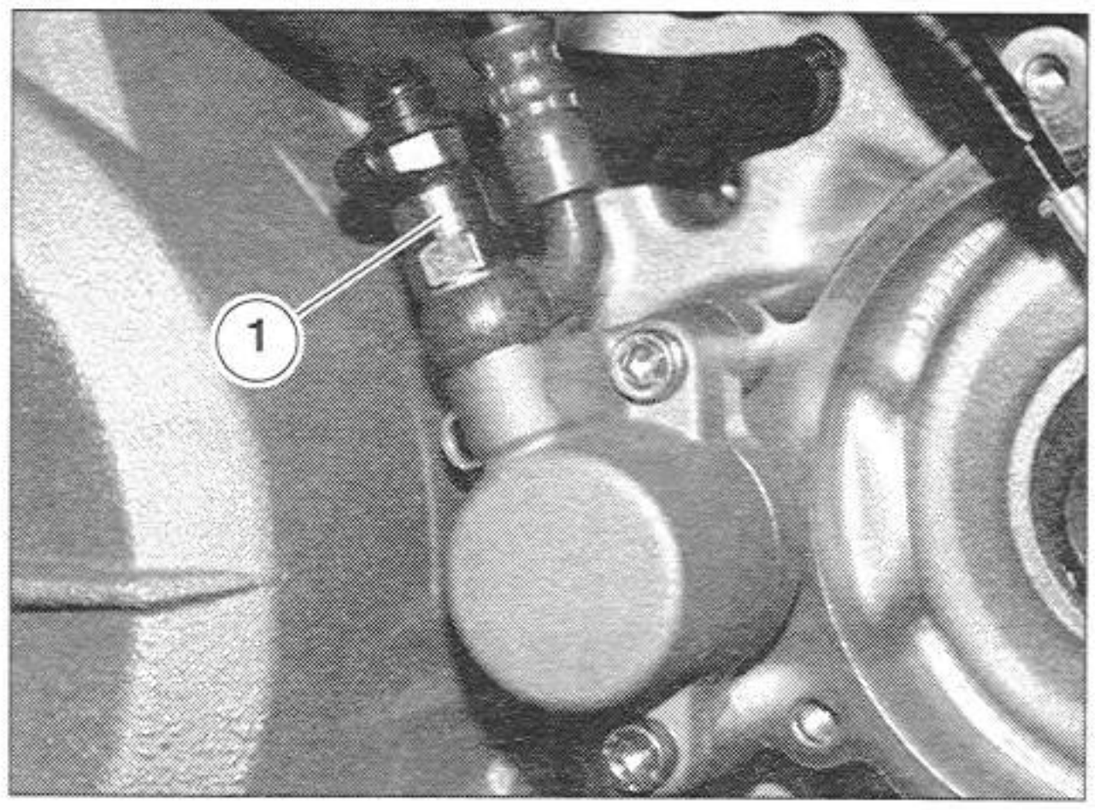

- Remove the dust cover.
- Fit a piece of transparent plastic tubing over the bleeder nipple (1), and insert the other end into a container.
- Loosen the bleeder nipple (1) by approximately one turn.

NOTE Throughout this operation, make sure there is always fluid present in the reservoir; otherwise, after the operation you will need to bleed the system, see 2.20 (CLUTCH CONTROL SYSTEM BLEEDING).

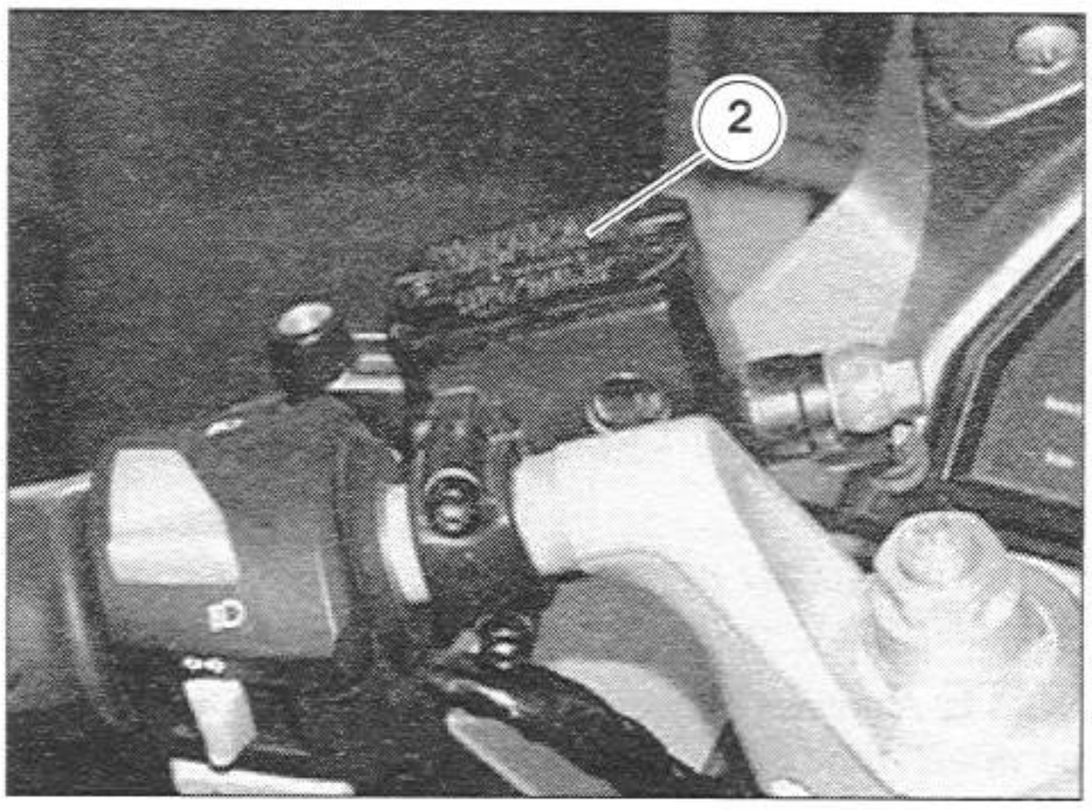

- Watch the reservoir (2) as the fluid flows out and tighten the bleeder nipple (1) before it empties entirely.
- Top up the reservoir (2), see 2.18 (CHECKING AND TOPPING UP THE CLUTCH FLUID).
- Loosen the bleeder nipple (1) again by approximately half a turn.
- Watch as the fluid flows out through the tube. As soon as you observe that the fluid flowing through the tube is clear, and no longer dark, tighten the bleeder nipple(1) again and remove the tube.

Tightening torque for bleeder nipple (1): 14.75 ftlb (20 Nm).

- Replace the dust cover.
- Top up to restore the proper level of fluid in the reservoir (2), see 2.18 (CHECKING AND TOPPING UP THE CLUTCH FLUID).

2.24 ADJUSTING FRONT BRAKE LEVER AND CLUTCH CONTROL LEVER

You can adjust the distance between the end of the lever (1) and the knob (2), turning the adjuster (3).
The positions **"1"** and **"4"** refer to an approximate distance, between the ends of the lever and knob, of 105 and 85 mm, respectively.
Positions **"2"** a **"3"** refer to intermediate distances.

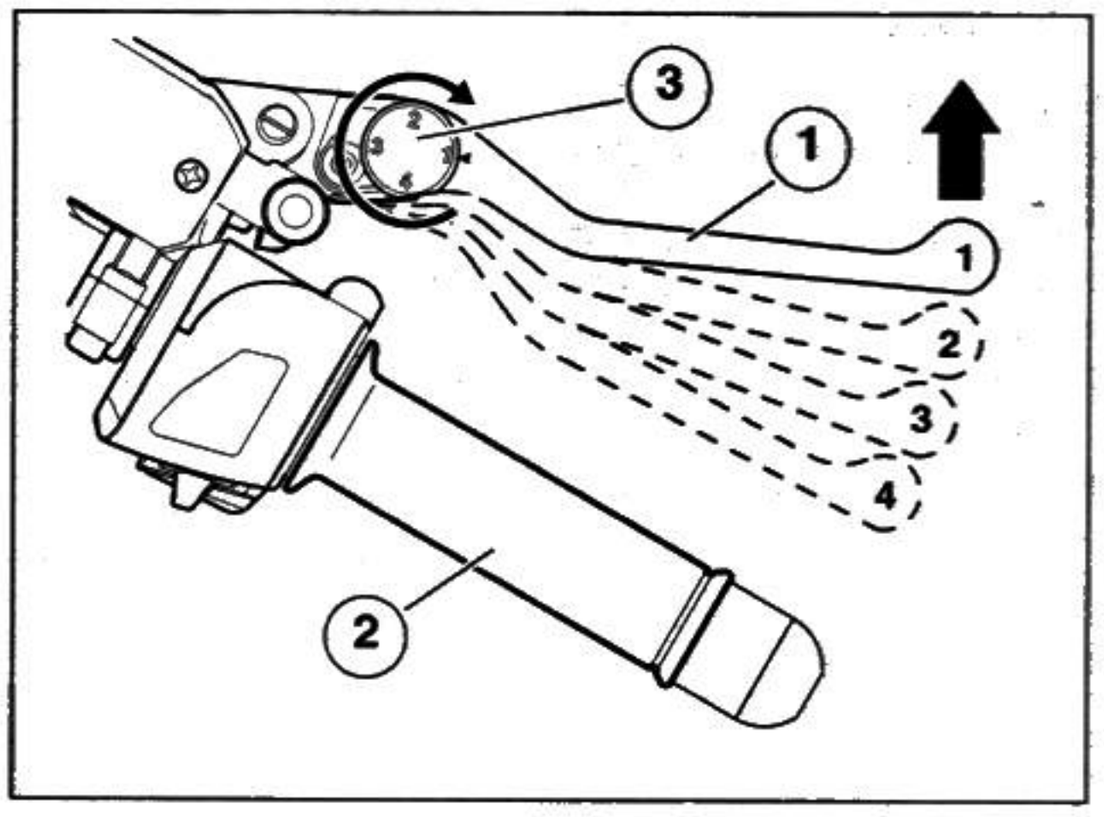

- Push the control lever (1) forward and turn the adjuster (3) until the desired number is aligned with the arrow.

2.25 ADJUSTING THE CLEARANCE OF THE REAR BRAKE LEVER

The brake lever is ergonomically positioned to suit most riders during vehicle manufacture.
If you wish to customize the brake lever position:

- Loosen the lock nut (1).
- Fully tighten the brake adjuster (2).
- Fully tighten the lock nut (3) on the master cylinder push rod (4).
- Tighten the master cylinder push rod (4) all the way, then unscrew 3-4 turns to loosen.
- Unscrew the brake adjuster (2) until the brake lever is at the desired height.
- Fix the brake adjuster (2) in place using the lock nut (1).
- Unscrew the master cylinder push rod (4) until it just contacts the master cylinder piston.
- Screw in the push rod to ensure a minimum clearance of 0.02 - 0.04 in (0.5 - 1 mm) between the master cylinder push rod (4) and the master cylinder piston.

NOTE Make sure there is enough play on the lever (5). If not, the brake will remain slightly applied, causing the brake components to wear out prematurely. Lever (5) clearance: 0.16 in (4 mm) (measured at the end of the lever).

- Lock the master cylinder push rod in place using the lock nut (3).

NOTE After completing the adjustment, make sure that the wheel turns freely when the brake is released.

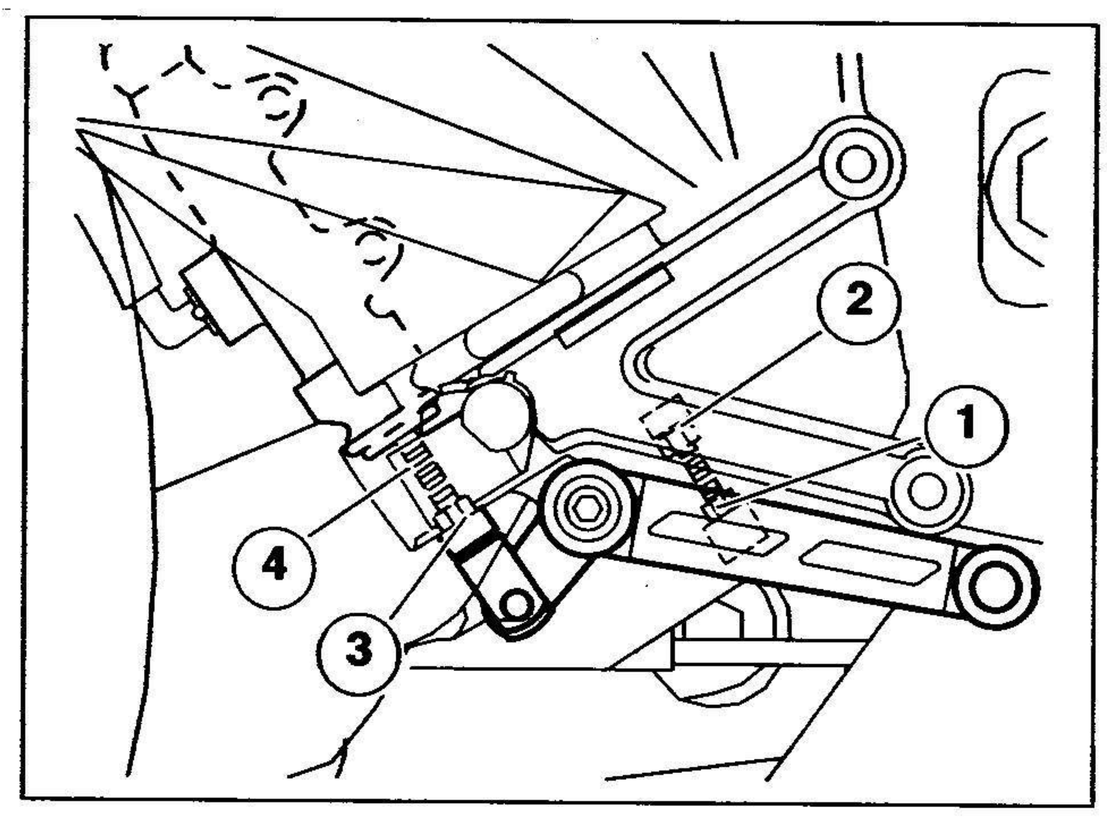

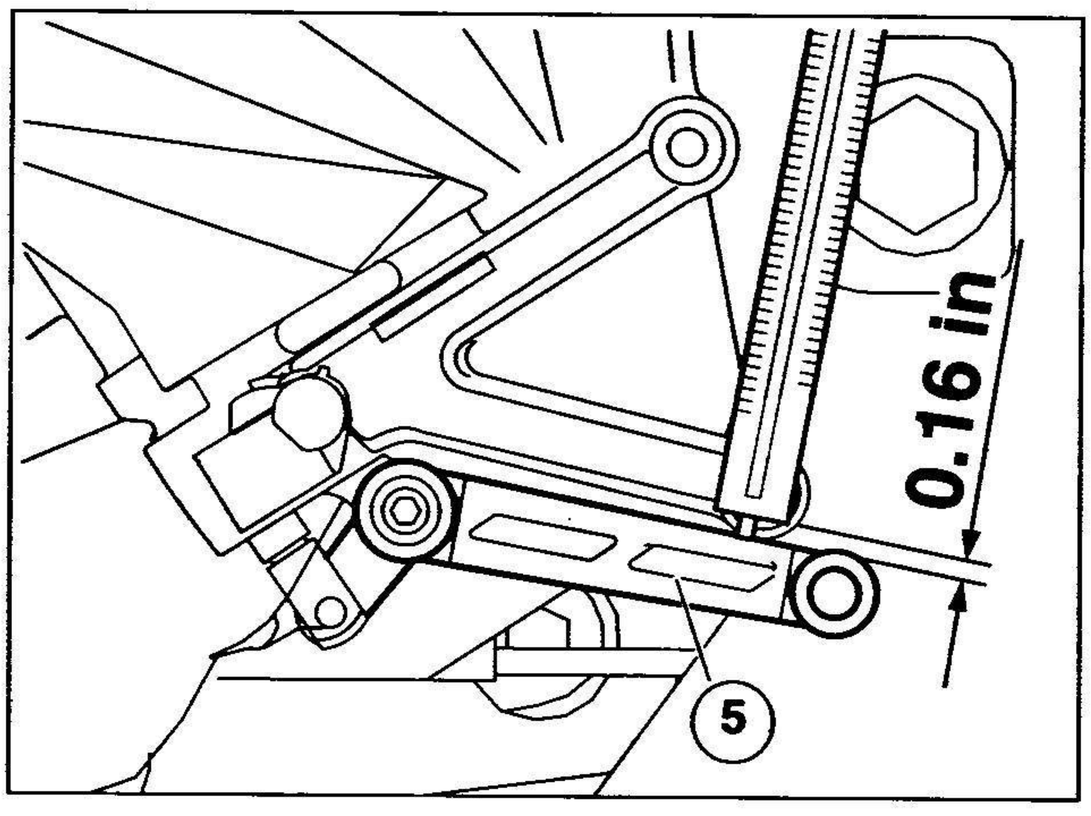

2.26 ADJUSTING THE GEARSHIFT LEVER

You may adjust the position of the gearshift lever using the eccentric rod (1) as follows:

- Place the vehicle on the center stand.
- Lower the stand (2) for easier operation.
- Loosen the nuts (3) 1 and (4).
- Rotate the eccentric rod and adjust the height of the gearshift lever.
- Tighten the nuts (3) 1 and (4).

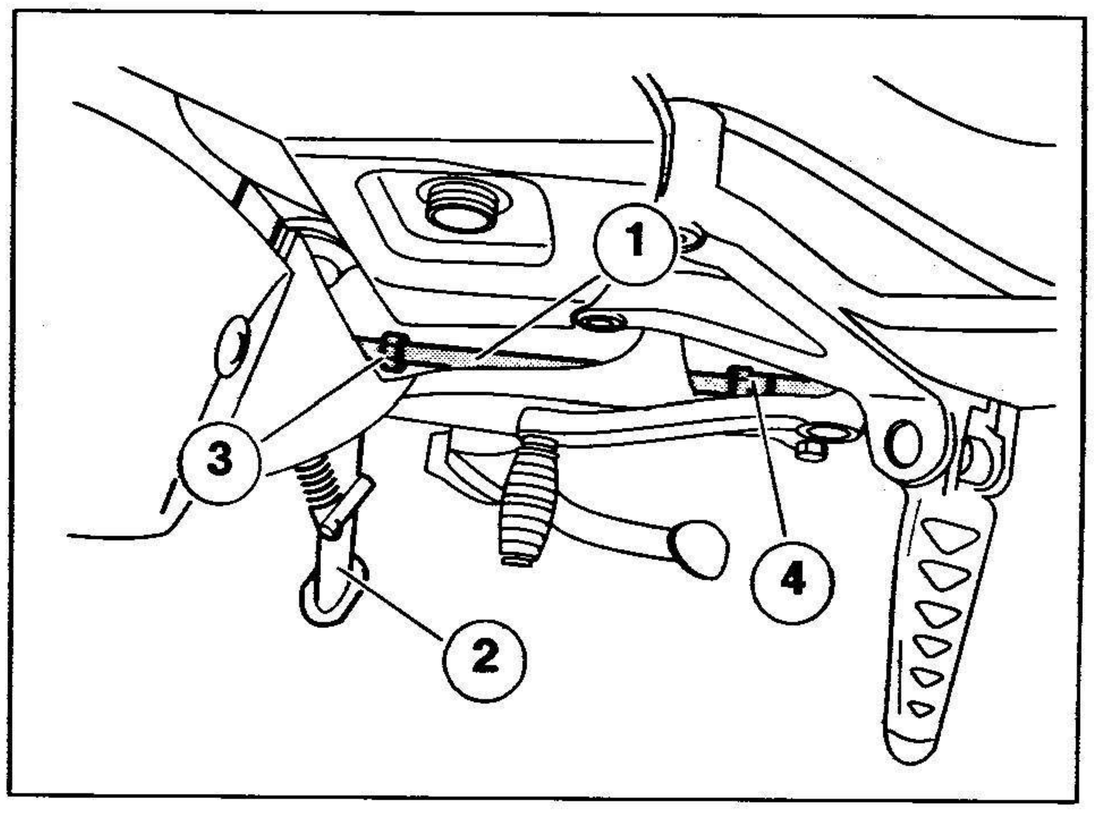

2.27 CHECKING THE BRAKE PAD WEAR

The amount of wear that the brake pads experience depends on how the vehicle is used, how aggressively it is ridden, and the condition of the roads upon which it is operated.

NOTE The following information may refer to a single brake system, but is applicable to both.

To quickly check the wear on the pads:

- Place the vehicle on the stand.
- Visually inspect between the disc and pads, working:
- from the bottom front for the front brake calipers (1);
- from the bottom rear for the rear brake caliper (2).

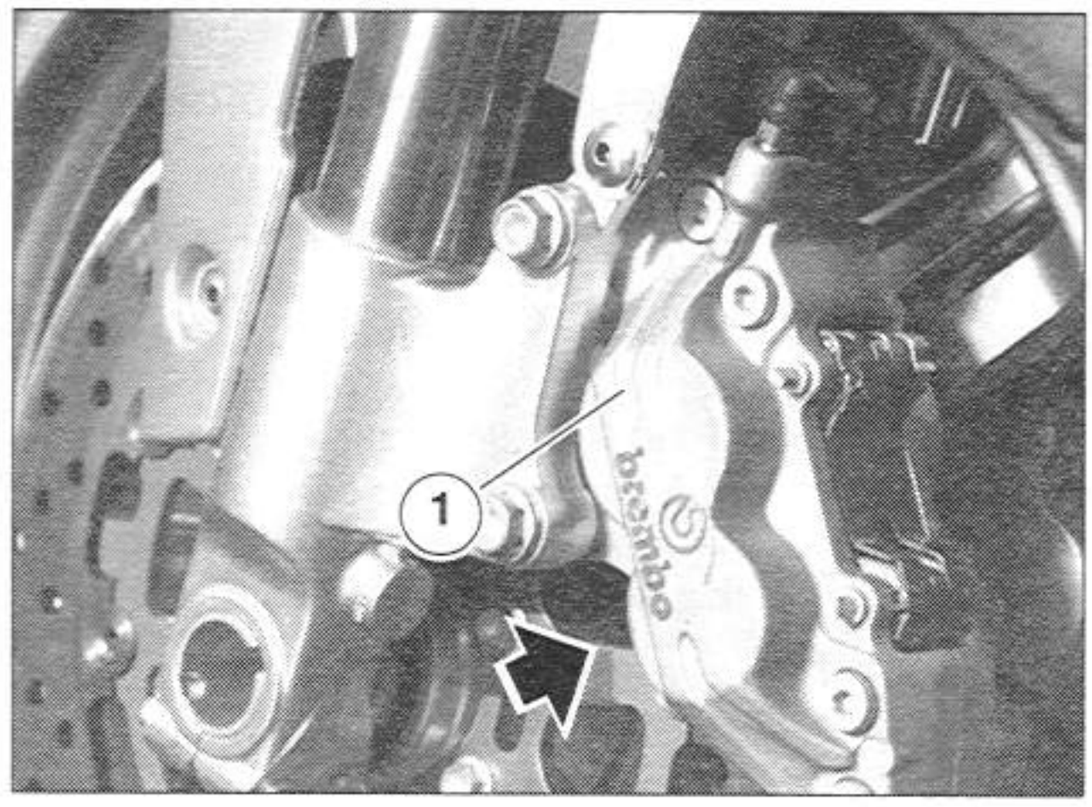

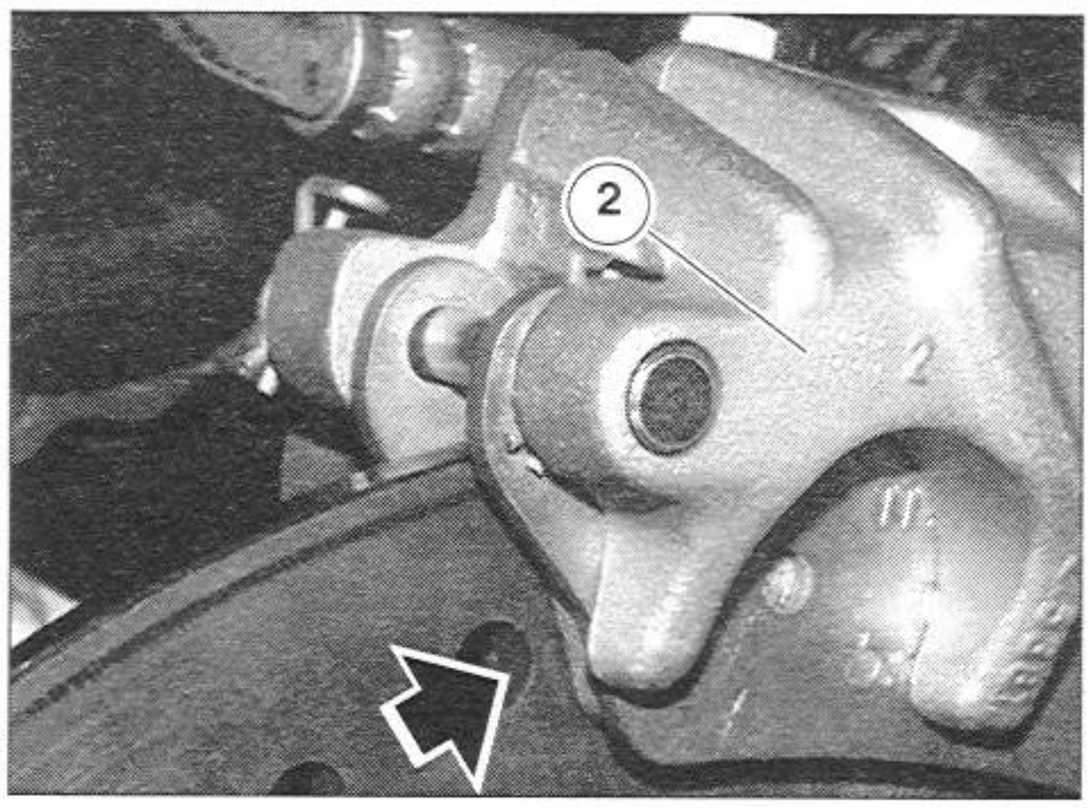

⚠ DANGER

Excessive wear on the pad friction material would cause the metal pad support to come into direct contact with the disc, creating a metallic grinding noise and producing sparks from the clamp; the braking effectiveness, safety and integrity of the disc would thus be compromised. Never ride a motorcycle with worn out brake pads. Failure to observe this warning can lead to loss of braking effectiveness, with a collision, upset, and serious injury or even death.

- If the thickness of the friction material (even of a single pad) is reduced to approximately 0.04 in (1 mm) (or if even only one of the wear indicators is no longer visible), replace both pads.
- Front pads (3), see 7.5.1 (CHANGING THE BRAKE PADS).
- Rear pads (4) see 7.6.1 (CHANGING THE BRAKE PADS).

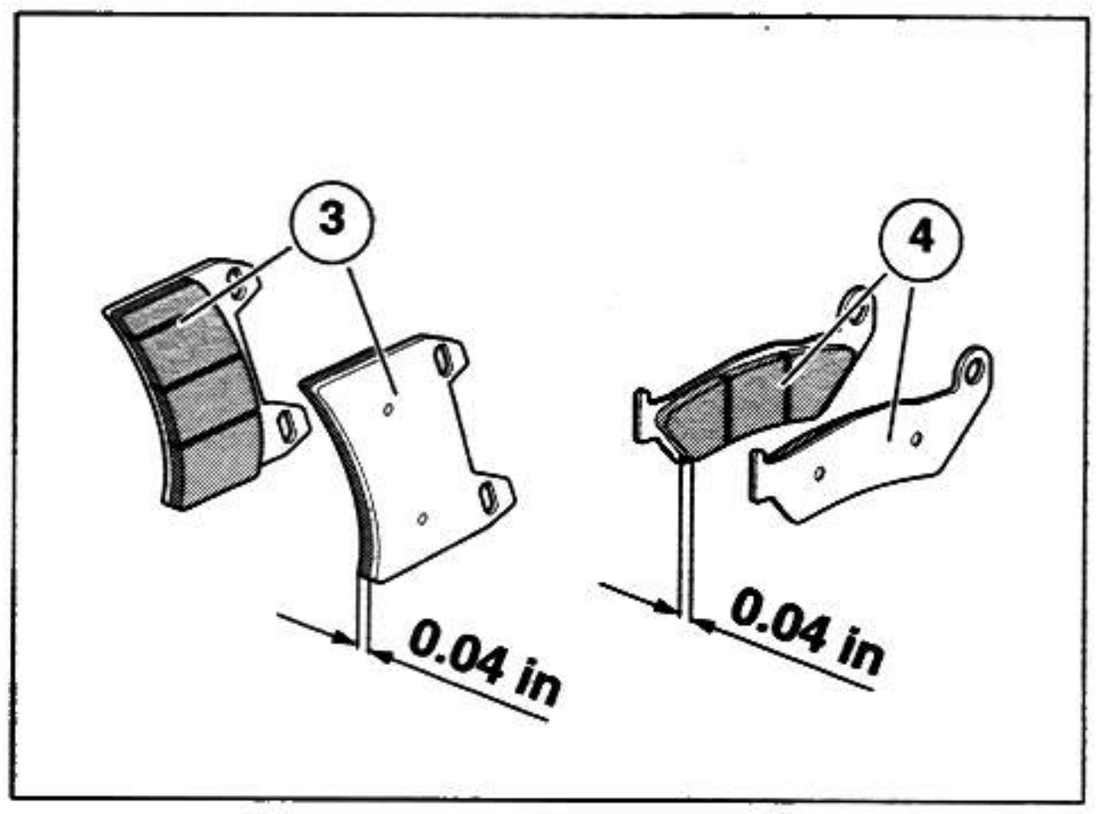

⚠ DANGER

Never replace just one brake pad in a set. Always replace them by pairs. Failure to observe this warning can lead to loss of braking with resultant collision, upset, and consequent serious injury or even death.

2.28 STEERING

Carefully read 0.5.1 (PRECAUTIONS AND GENERAL INFORMATION).

Check after the first 937 mi (1,500 km) and then after every 4687 mi (7,500 km), or every 8 months.
To assure superior handling, the steering is equipped with rolling bearings.
The steering must be adjusted correctly to provide smooth rotation of the handlebar and safe driving. Tight steering hinders the smooth rotation of the handlebar, whereas play steering reduces stability.

2.28.1 CHECKING THE BEARING PLAY

- Place the vehicle on the center stand.
- Shake the fork fore and aft.
- There should be no play. If you detect any play, adjust the bearing, see 2.28.2 (ADJUSTING THE BEARING PLAY).

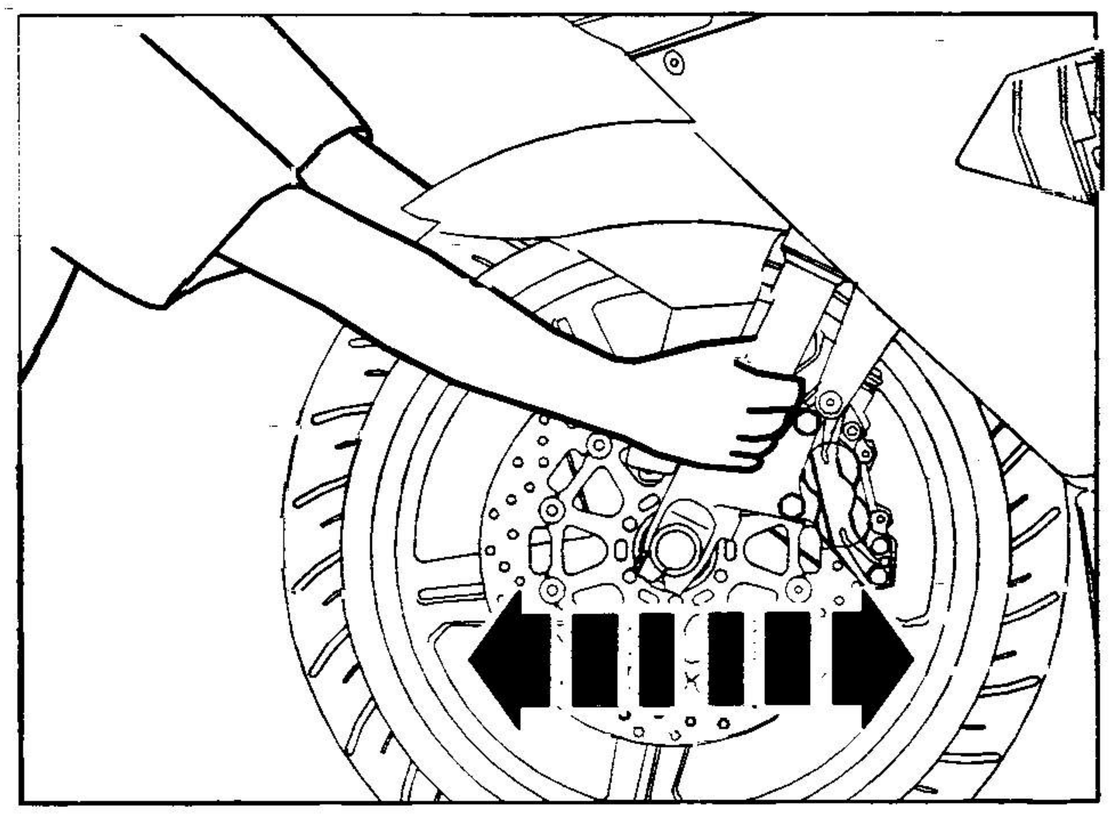

2.28.2 ADJUSTING THE BEARING PLAY

carefully read 1.3.9 (PRECAUTIONS AND GENERAL INFORMATION).

- To make it easier to adjust the bearing play, we recommend that you perform the three operations listed below:
- Remove both knobs, see 7.1.11 (REMOVING THE HANDGRIP FROM THE LEFT HANDLEBAR) and 7.1.14 (REMOVING THE THROTTLE CONTROL);
- Remove the electrical control on the left handlebar, see 7.1.13 (REMOVING ELECTRICAL CONTROLS ON THE LEFT HANDLEBAR);
- Remove both brake controls, see 7.1.12 (REMOVING THE CLUTCH CONTROL) and see 7.1.15 (REMOVING THE FRONT BRAKE CONTROL).

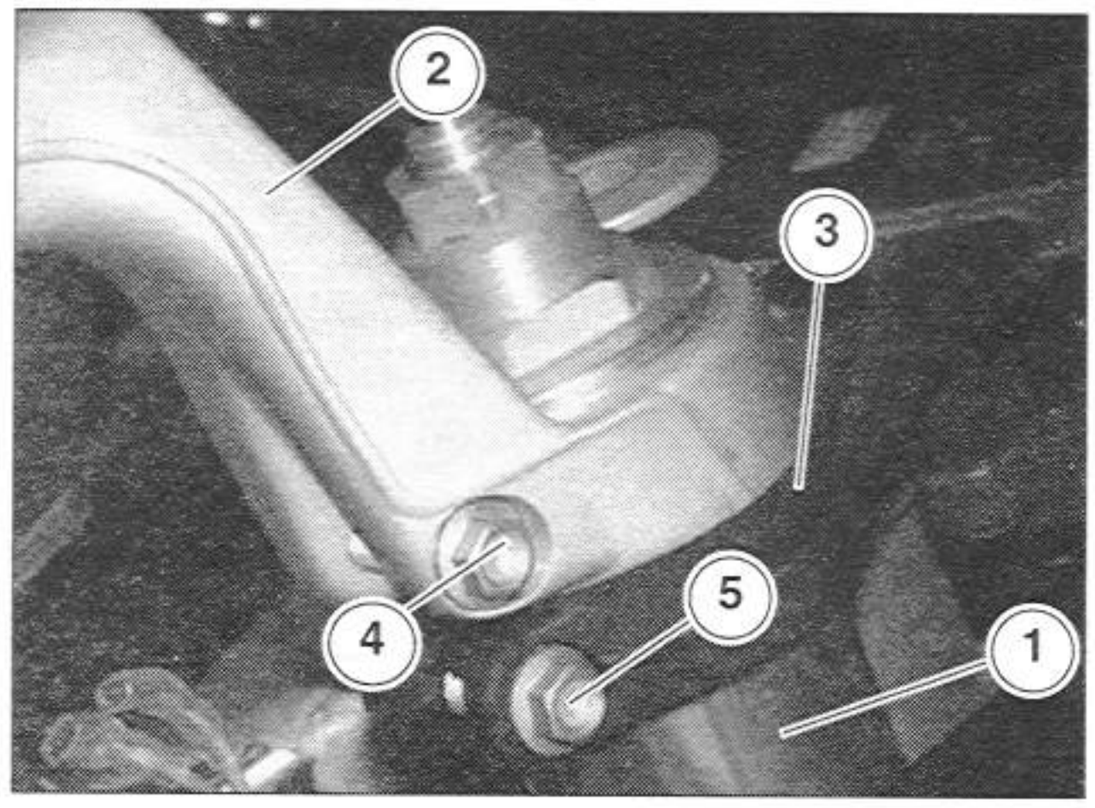

- Partially unscrew the bolt (4) fastening the handlebar (2) to the fork (1).
- Partially unscrew the bolt (5) fastening the fork head (3) to the fork (1).
- Unscrew and remove the upper bushing (6), retrieving the spring washer (7).
- Using a plastic mallet, tap from the bottom, pushing the fork head (3) out from the top, complete with steering lock ignition switch.
- Bend the fork head (3) forward, inserting a cloth to keep from damaging the dashboard.
- Use a small blade screwdriver, straighten the tabs (the ones folded upward) of the lock plate (9).

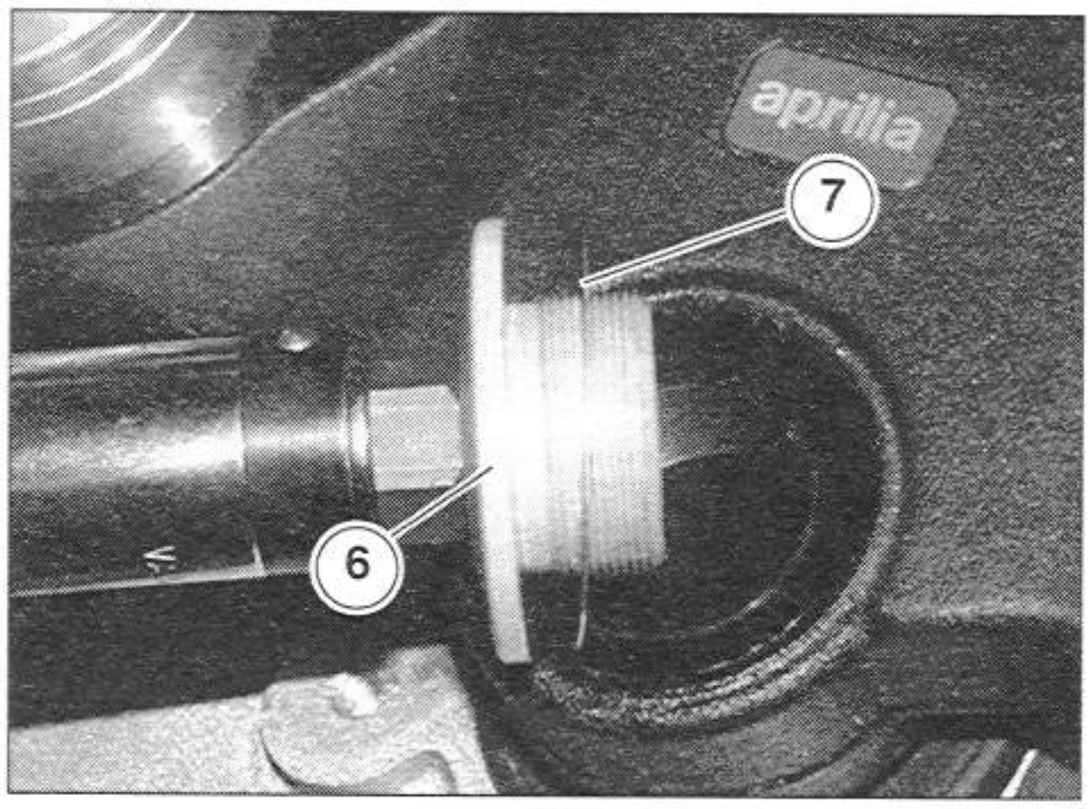

NOTE Have on hand the special tool OPT code 8140203 (steering adjustment socket wrench).

- Use the special socket wrench to loosen and remove the ring-nut (10).
- Remove the lock plate (9).

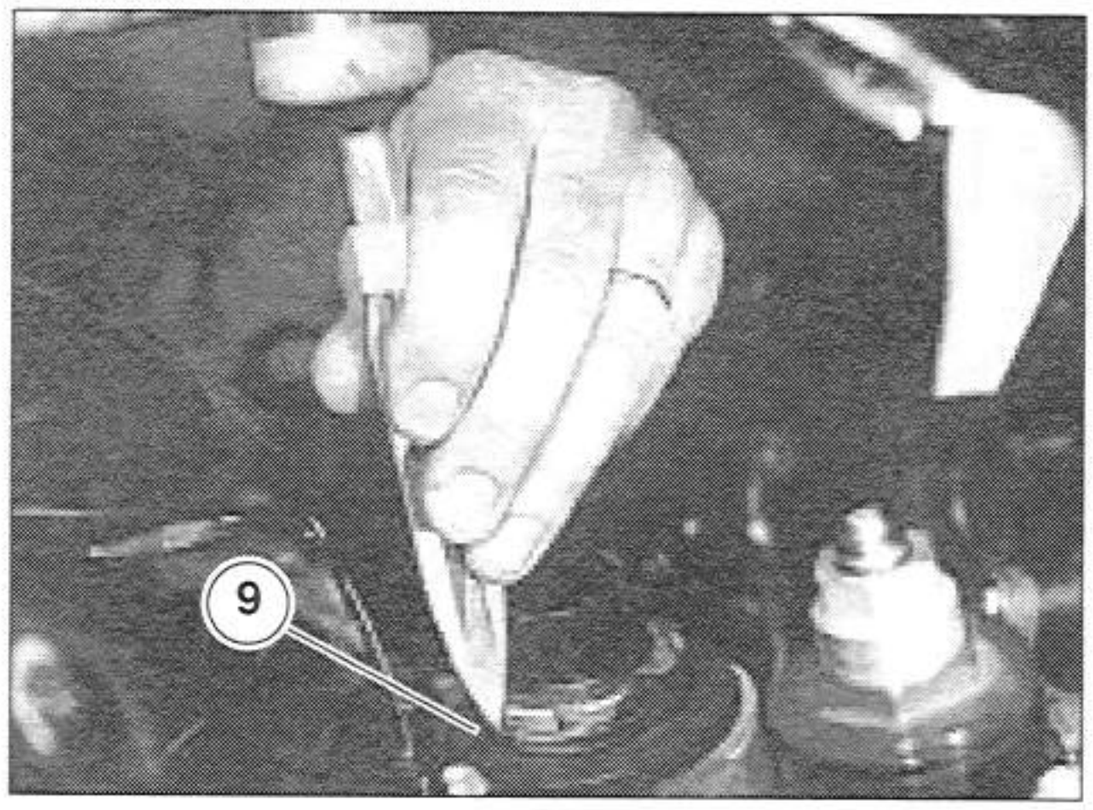

⚠ DANGER

During reassembly, the lock plate (9) must be replaced. Never reuse a lock plate. Always replace the lock plate removed with a new one. Failure to observe this warning can result in loss of steering integrity with subsequent loss of control of the motorcycle, upset, serious injury, or even death.

- Use the special socket wrench to tighten the adjusting ring nut (8) to obtain the appropriate clearance.

Tightening torque for adjusting ring nut (8): 40 Nm (4.0 kgm).

- Replace the lock plate (9) in such a way that the tabs match up with the grooved sectors of the ring-nut (8).
- Use the special socket wrench to tighten the locking ring nut (10).

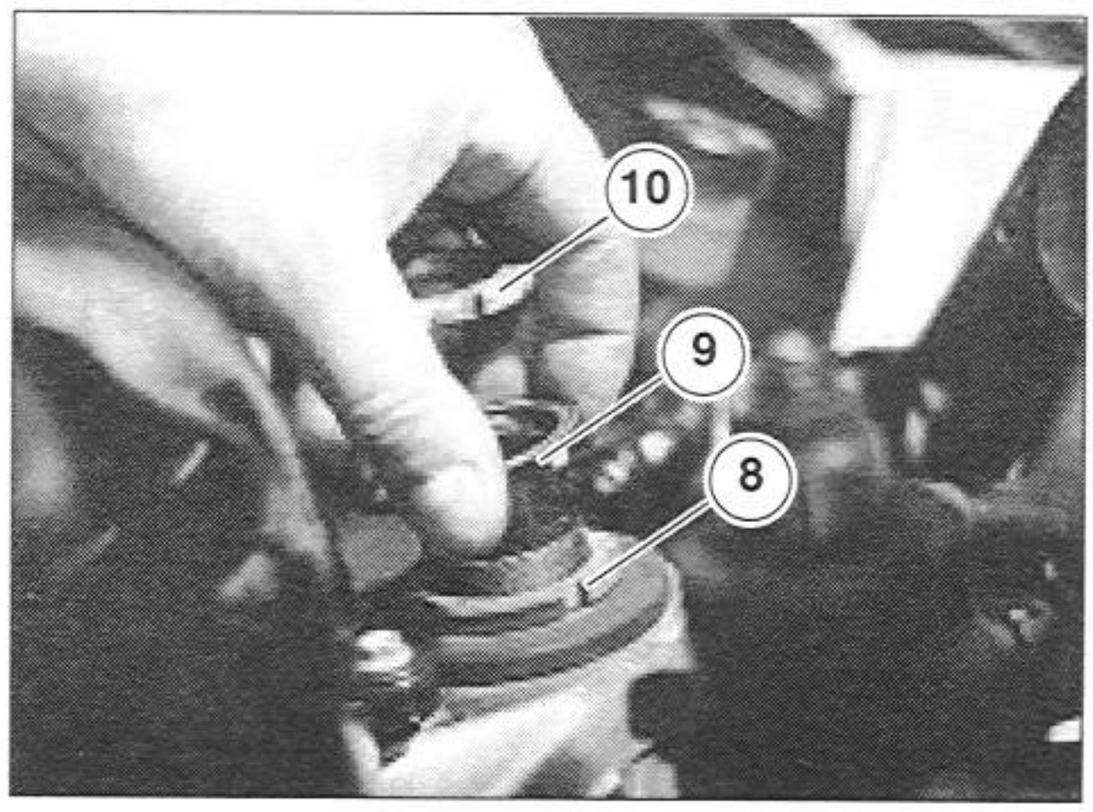

Locking ring nut tightening torque (10): manually until contact + 1/4 turn.

NOTE Bend the tabs of the lock plate (9) upwards.

- Bend the four tabs of the lock plate (9) upwards on the grooved sector of the locking ring nut (10).
- Replace the fork head (3), installing it correctly.

- Lubricate the thread and base of the bushing (6) with motor oil, see 1.12 (LUBRICANT CHART).
- Tighten the upper bushing (6), correctly replacing the spring washer (7).

Tightening torque for upper bushing (6): 88.50 ftlb (120 Nm).

- ★ Insert and tighten the screw (5).

Tightening torque for screw (5): 18.44 ftlb (25 Nm).

NOTE When reassembling lubricate the thread and under the head of the screw (4).

- ★ Insert and tighten the screw (4).

Tightening torque for screw (4): 18.44 ftlb (25 Nm).

⚠ WARNING

After everything has been tightened, make sure the handlebars rotate smoothly in both directions. If not, they may damage the sliding seats and adversely affect vehicle handling.

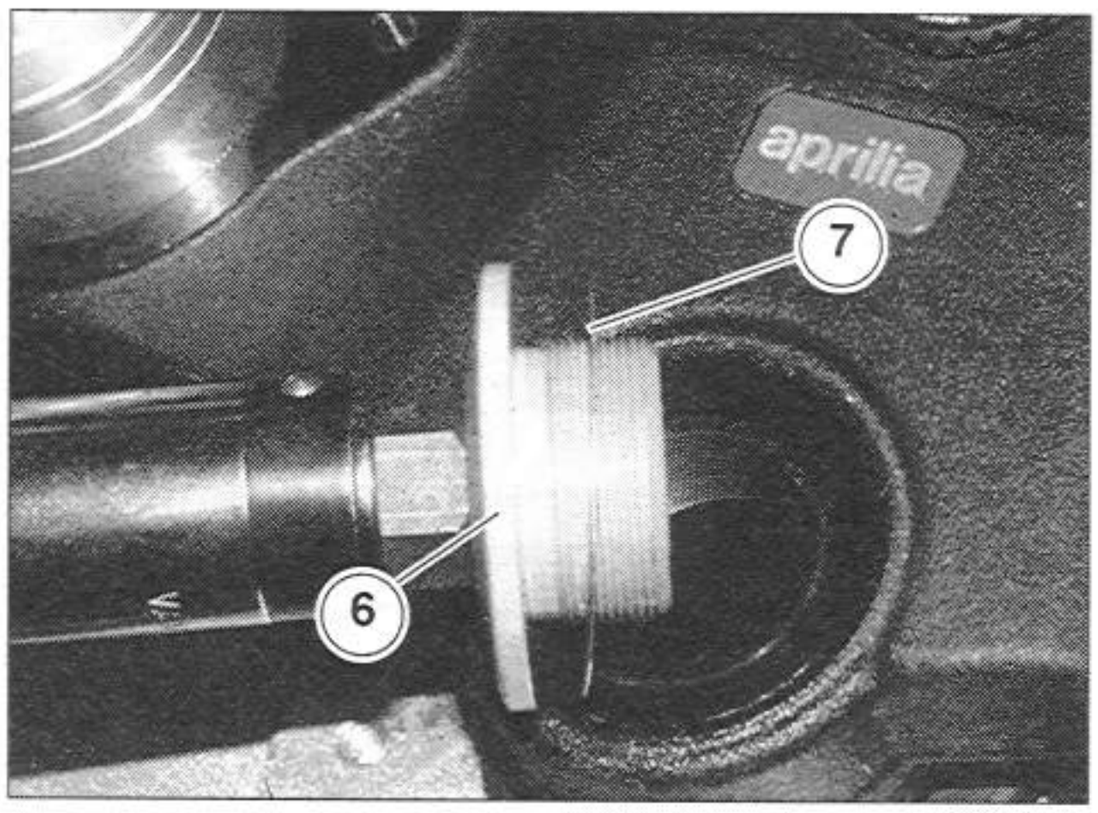

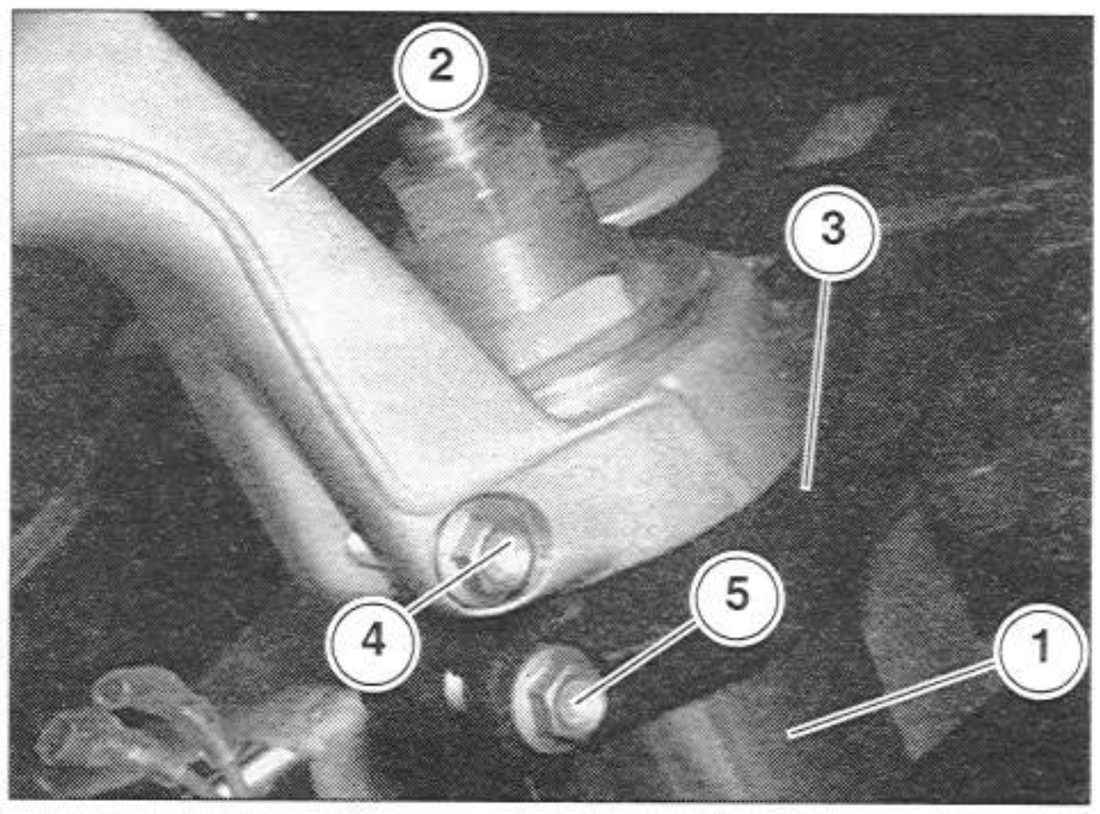

2.29 INSPECTING THE FRONT SUSPENSION

2.29.1 FRONT SUSPENSION

The front suspension is made up of a hydraulic fork connected by two plates to the steering column.
To adjust the vehicle attitude, each tube of the fork is equipped with an upper screw (1) to adjust the hydraulic damping on extension, and a lower screw (2) to adjust the spring preload.
The vehicle attitude, or riding position, may be further adjusted by changing the height of the front fork.

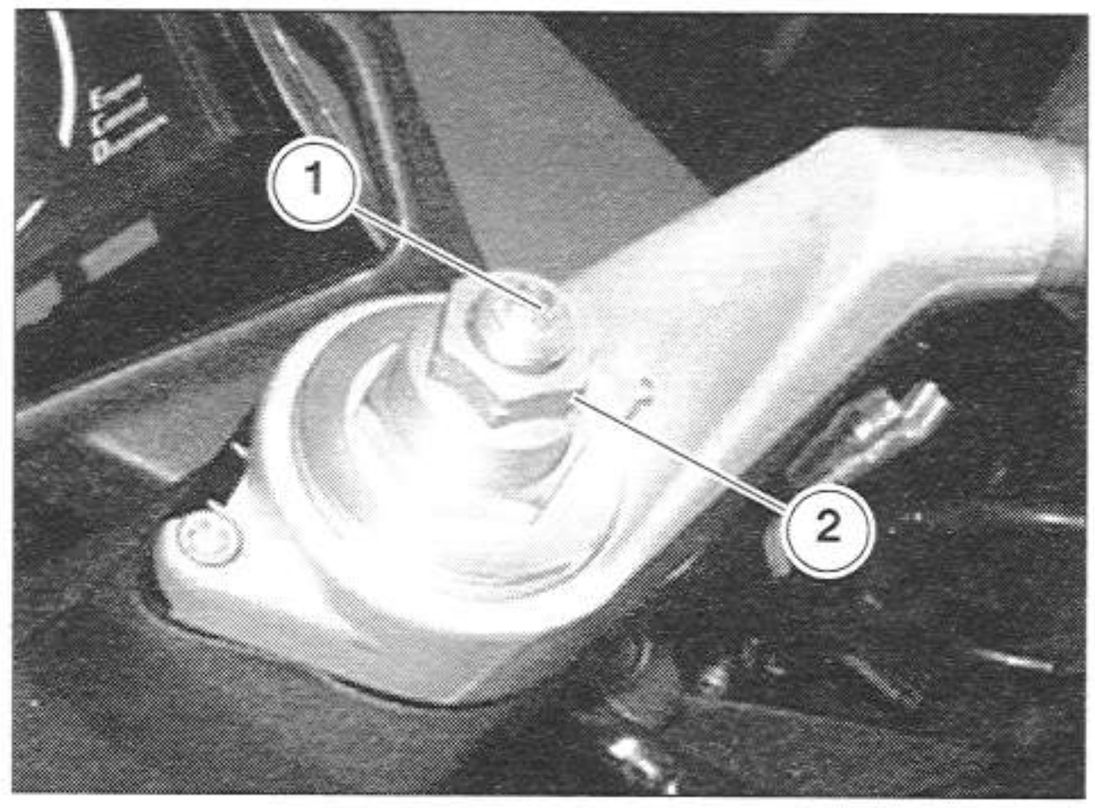

Carefully read 0.5.1 (PRECAUTIONS AND GENERAL INFORMATION).

Change the front fork oil after the first 4687 mi (7500 km), and every 14,000 mi (22,500 km) thereafter.

Every 4687 mi (7500 km) carry out the following checks:

- Applying the front brake lever, press on the handlebar repeatedly to push the fork down.
  The fork must slide smoothly and evenly, and there must be no traces of oil on the fork tubes.

If the fork tends to "bottom out", adjust as needed, see 2.29.2 (ADJUSTING THE FRONT FORK) and change the oil if necessary, see 7.8.1 (CHANGING THE FORK OIL).
Make sure that the fork does not leak oil and that the outer surface of the tubes is not scratched or grooved.
Front fork components normally cannot be repaired, but must be replaced, see 7.8.3 (DISASSEMBLING THE LOWER FORK TUBE/UPPER FORK TUBE UNIT).

- Make sure that all parts are properly tightened and that the front suspension is in good working order.

2.29.2 ADJUSTING THE FRONT FORK

The front fork is adjusted at the factory to suit most riding conditions for most riders at low and high speeds, with light or heavy vehicle loads. However, it is possible to customize the fork setting to accommodate the full range of operating conditions that the vehicle is intended to be used for.

NOTE Choose the type of adjustment desired, based on the information in the table, before touching the adjusters.

SETTINGS:

Standard setting:
for normal loads (for example, rider and luggage).
Medium setting:
for heavy loads (for example passenger, rider and luggage).
Rigid setting:
for competitive riding.
Full-load setting:
for touring.

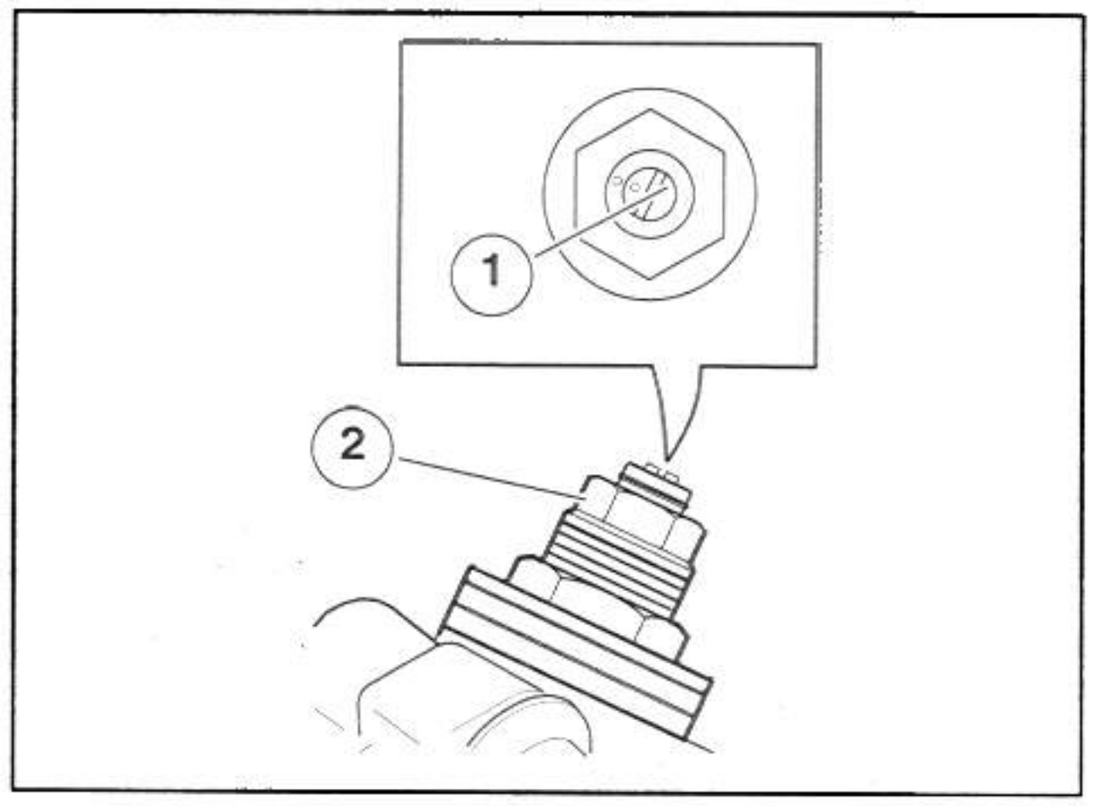

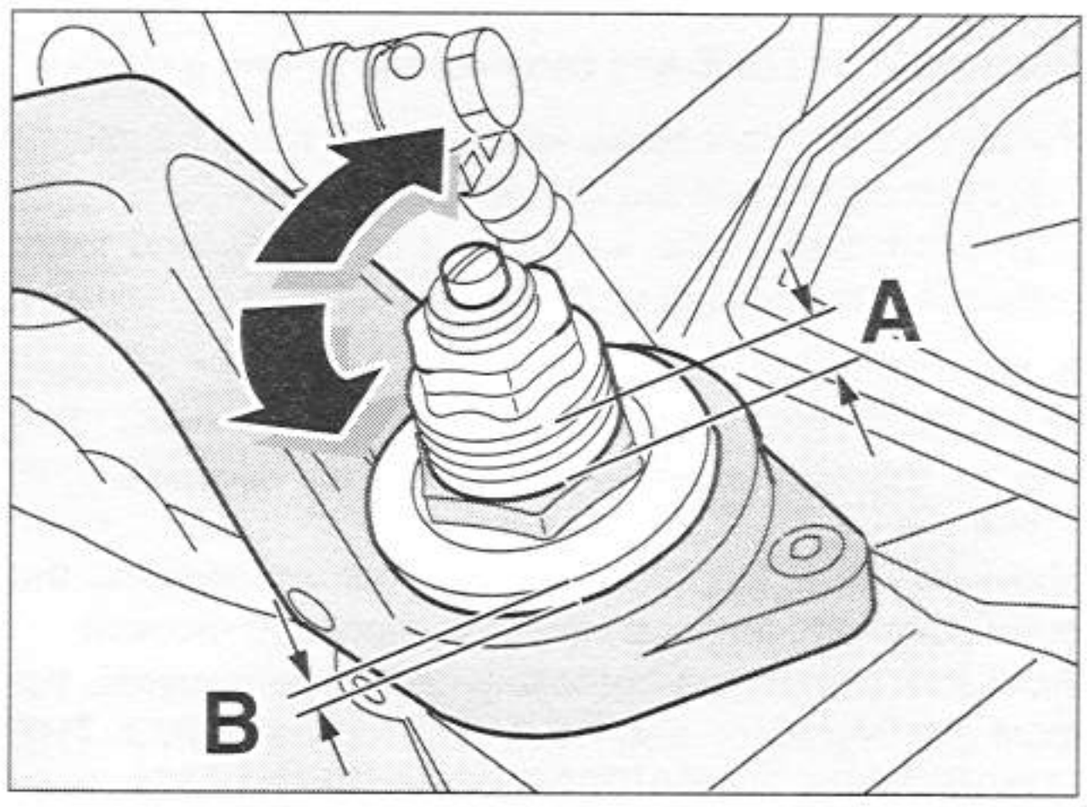

⚠ WARNING

Do not force the adjuster screw (1) to turn beyond the end of its stroke in both directions, to avoid damaging the vehicle.
Ensure that the spring preload and hydraulic damping is the same for both sides: the vehicle will become less stable if there are different settings on the two sides.
When the spring preload is increased, it is necessary to also increase the hydraulic damping, to avoid harshness while riding.

⚠ WARNING

When adjusting, always start from the most rigid setting [screw (1) turned fully clockwise].
Use the notches provided on the adjuster screw (1) as reference marks for adjusting of hydraulic damping on extension.
Gradually rotate the adjuster screw (1) 1/ 8 turn at a time.
Test the vehicle repeatedly on the road until you have determined the optimum setting.

⚠ WARNING

There is no adjustment available for the protrusion of fork tubes (B). It is strictly prohibited to change the riding position by adjusting this protrusion.
The standard setting has the fork tube (B) protruding as far as the first notch.

TABLE

Front suspension	Standard setting	Soft setting	Rigid setting	Full-load adjustments
Hydraulic adjustment in extension, screw (1)	from fully closed (*) open (**) 1.25 turns	from fully closed (*) open (**) 1.5 turns	from fully closed (*) open (**) 1 turn	from fully closed (*) open (**) 1.25 turns
Spring preload, nut (2) [notch reference mark (A)]	to the 6th notch	to the 7th notch	to the 5th notch	to the 7th notch

(*) = clockwise
(**) = counter-clockwise

2.30 SWINGING ARM

Carefully read 1.3.9 (PRECAUTIONS AND GENERAL INFORMATION).

Make sure the pivot bearings in the swinging arm are firmly tightened..

To check:

- Place the vehicle on the center stand.
- Shake the wheel up and down, then from side to side (see figure).
- if you feel any extra play, proceed with adjusting the swinging arm, see 2.30.1 (ADJUSTING THE SWINGING ARM).
- If the play persists, replace the bearings, see 7.9.2 (DISASSEMBLING THE SWINGING ARM).

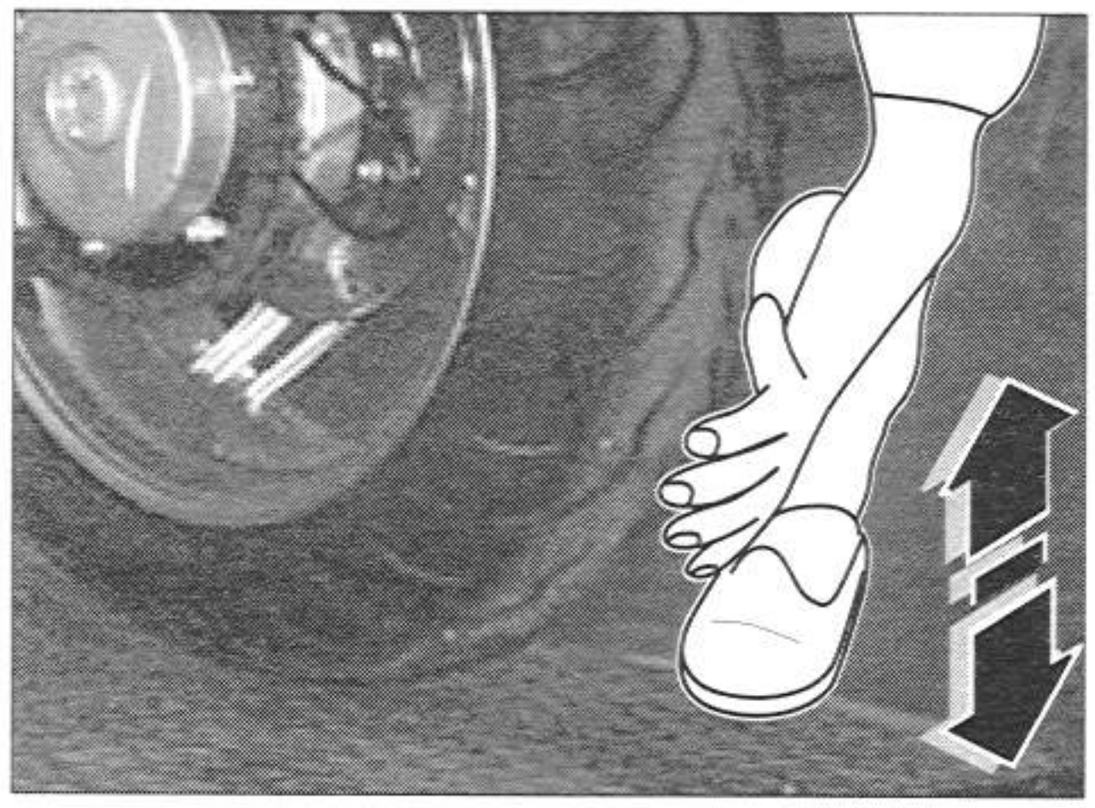

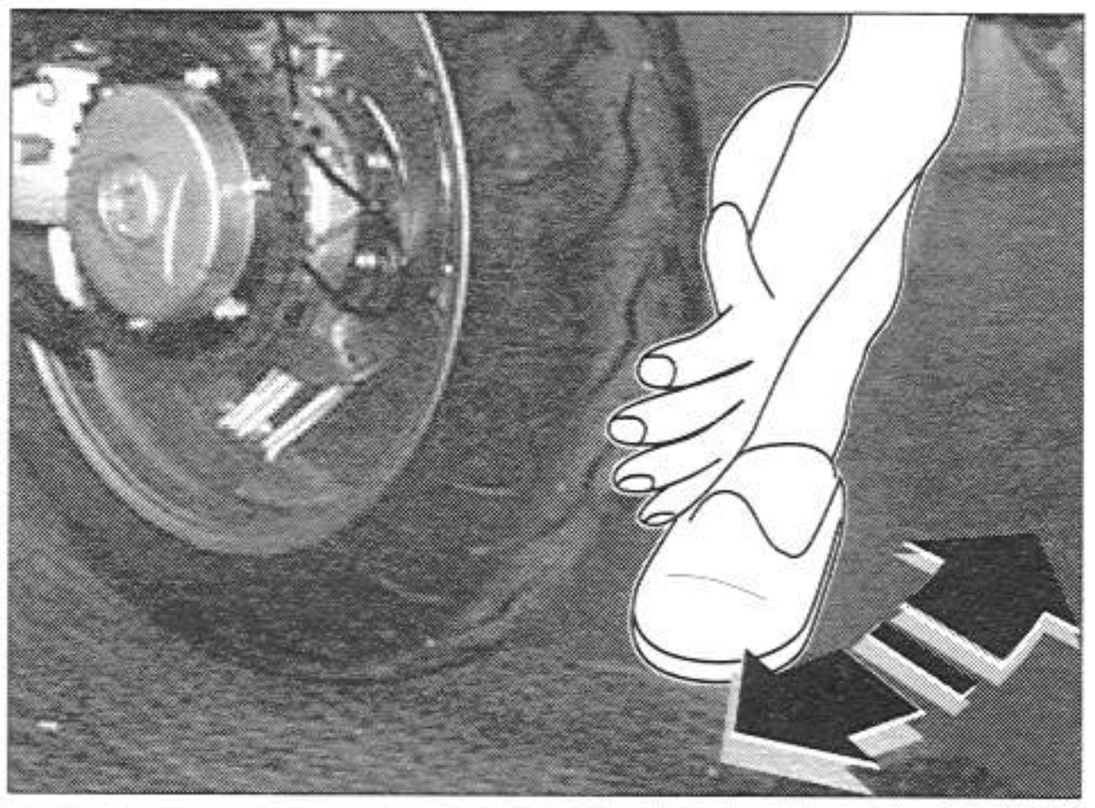

2.30.1 ADJUSTING THE SWINGING ARM

Carefully read 1.3.9 (PRECAUTIONS AND GENERAL INFORMATION).

- Place the vehicle on the center stand.
- Completely loosen the nut (1).

NOTE Have on hand the special tool OPT code 8140203 (socket wrench for adjusting swinging arm pivot - engine mounts).

- Use the special socket wrench to completely loosen the locking ring-nut (2).
- Working from the right-hand side of the vehicle, rotate the swinging arm pivot (3) clockwise, which will cause the adjuster bushing (4) to rotate with it and push against the swinging arm.

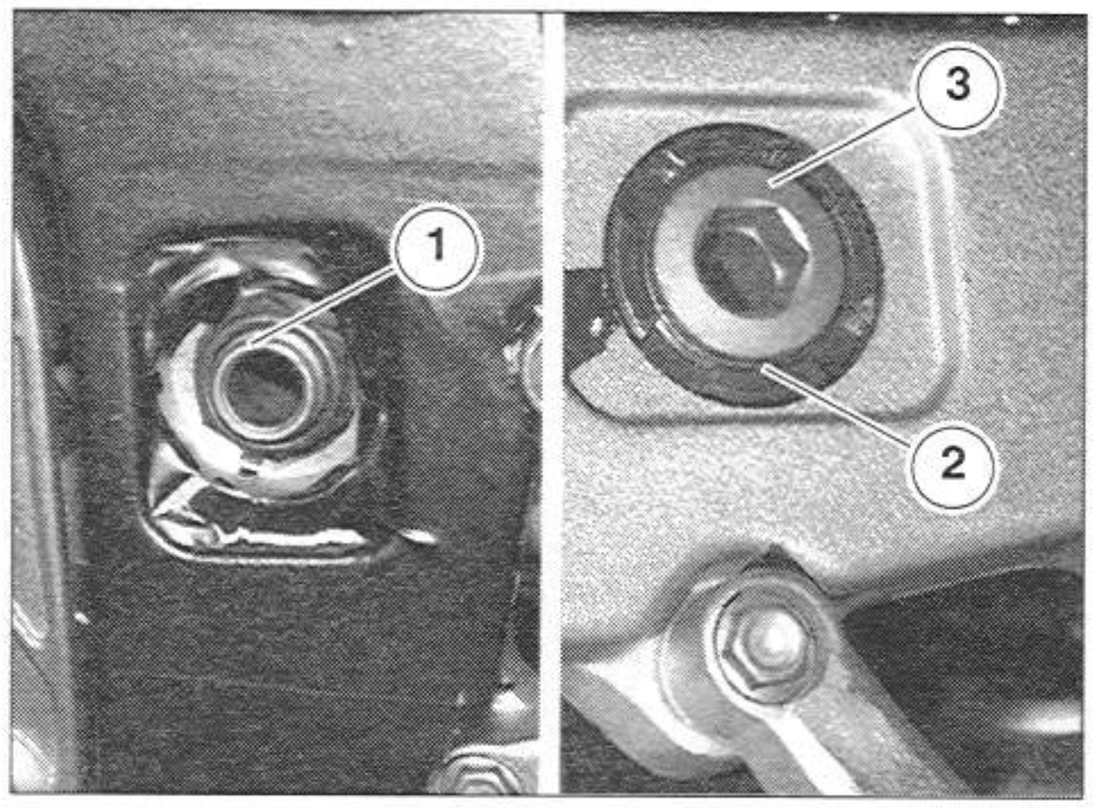

Tightening torque to apply to the pins (3): 8.85 ftlb (12 Nm).

- Use the special socket wrench to tighten the locking ring-nut (2).

Tightening torque for the lock nut (2): 44.25 ftlb (60 Nm).

- Tighten the nut (1).

Tightening torque for nut (1): 66.38 ftlb (90 Nm).

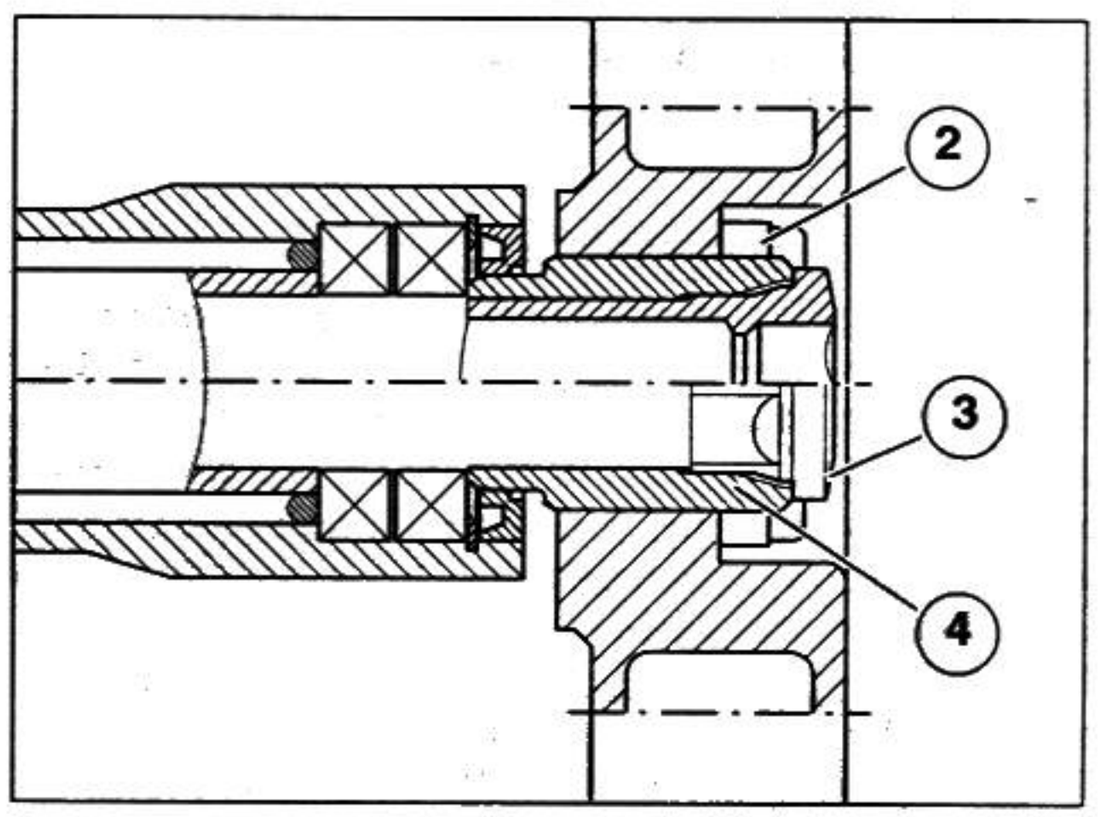

2.31 INSPECTING THE REAR SUSPENSION

2.31.1 REAR SUSPENSION

The rear suspension is made up of a shock absorber-spring assembly, connected to the frame by silent-block and to the swinging arm by a system of levers. To adjust the riding height of the vehicle, the shock absorber is equipped with an adjuster screw (1) to adjust the hydraulic damping on extension, and an adjuster knob (2) to set the spring preload (3).

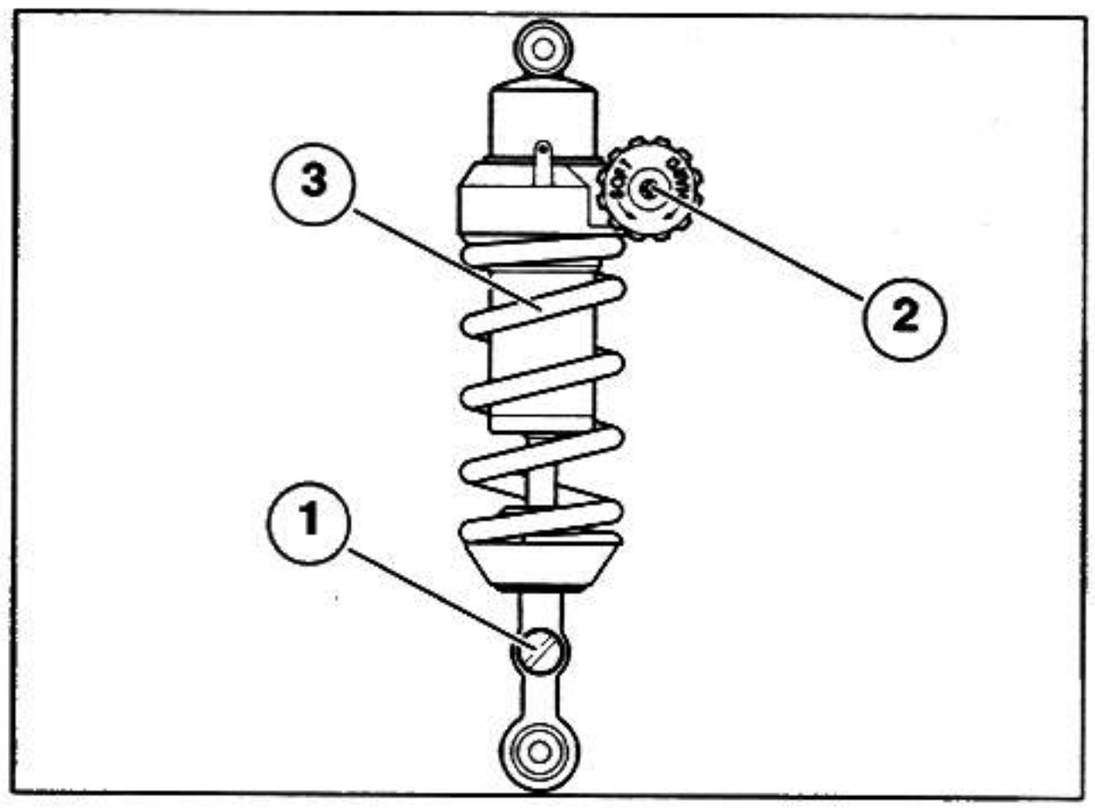

Carefully read 1.3.9 (PRECAUTIONS AND GENERAL INFORMATION).

Check after the first 625 mi (1,000 km) and then after every 9375 mi (15,000 km), or every 16 months.

- Make sure that all of the fasteners on the rear suspension are correctly tightened and that the pivot points are properly lubricated." (I don't really understand what is asked for here.

2.31.2 REAR SHOCK ABSORBER ADJUSTMENT

The rear shock absorber is adjusted at the factory to suit most riding conditions for most riders at low and high speeds, with light or heavy vehicle loads.
It is, however, possible to customize the setting to best suit the way in which the vehicle is to be used.

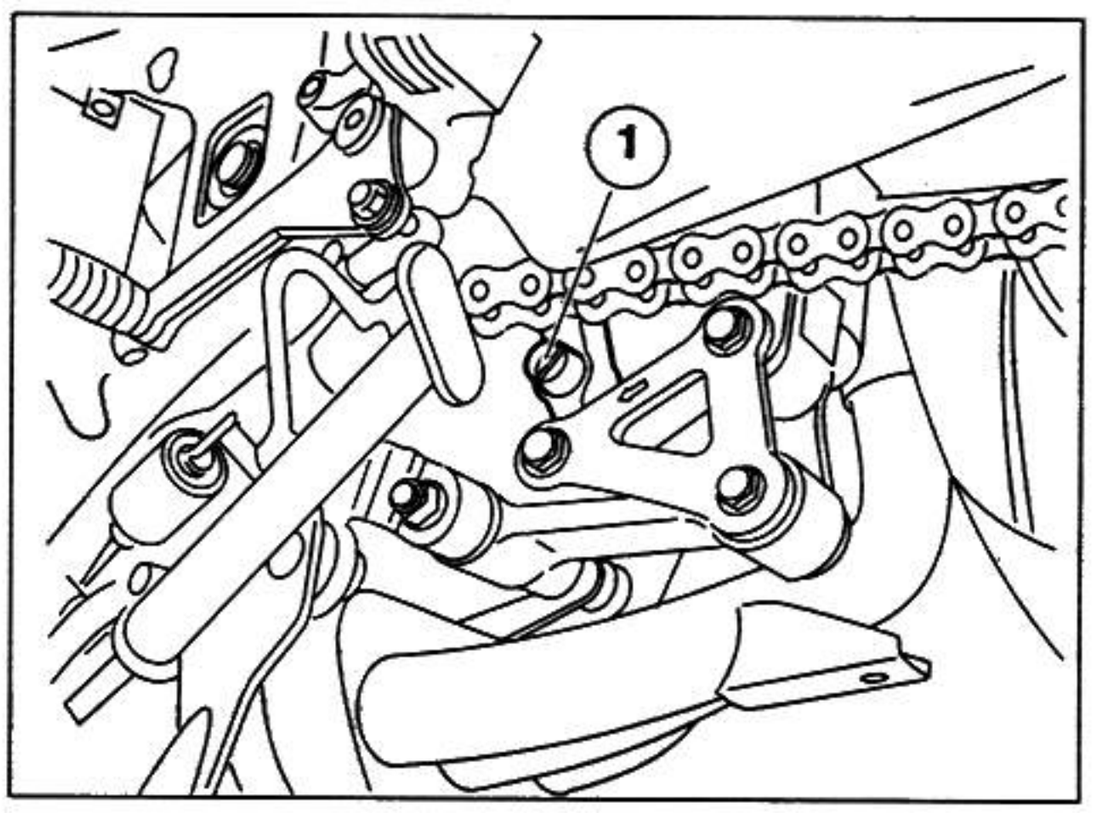

⚠ WARNING

When adjusting, always start from the most rigid setting; in this case, with the adjuster screw (1) and adjuster knob (2) turned all the way clockwise.
Do not turn the adjuster screw (1) beyond its maximum position, to avoid damaging the thread.
Make sure that the adjuster screw (1) is always set to a notch and not in an intermediate position.

- Turn the screw (1) to adjust the hydraulic damping on extension of the shock absorber (see table).
- Turn the knob (2) to adjust the hydraulic damping on compression (see table).

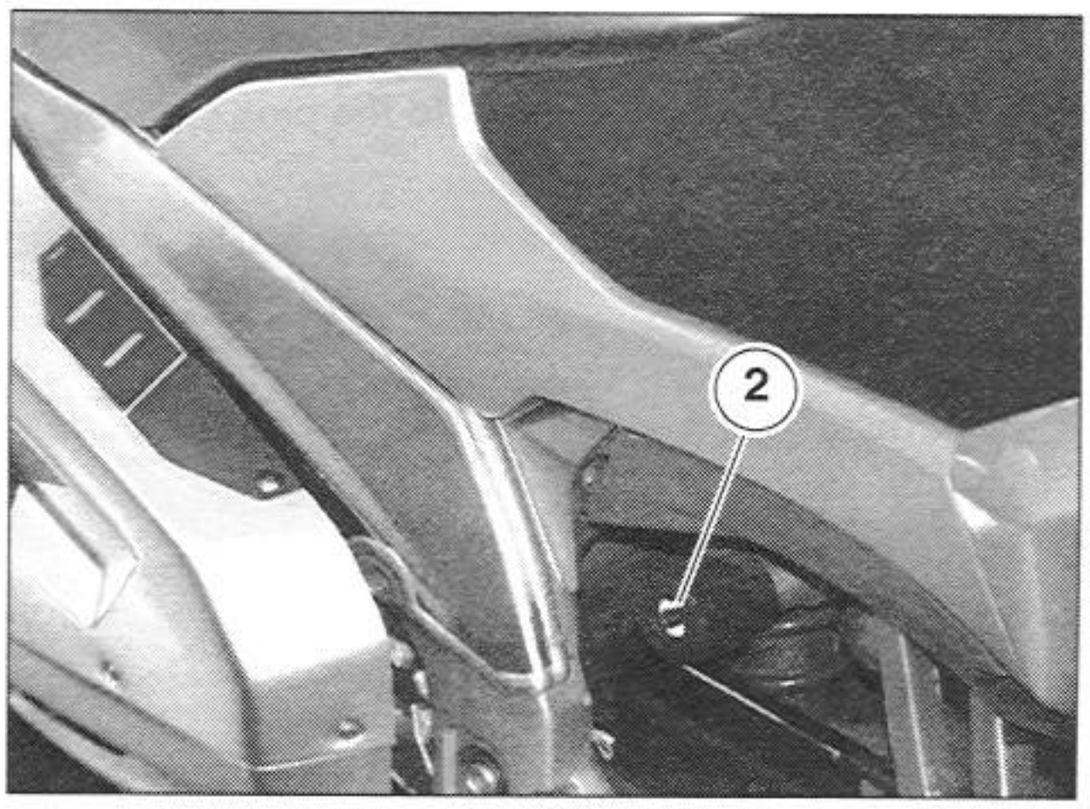

⚠ WARNING

Adjust the spring preload and hydraulic damping on extension of the shock absorber based on the conditions in which the vehicle is used.
When the spring preload is increased, it is necessary to also increase the hydraulic damping, both on extension and compression, to avoid a jerky, unsteady shock action while riding.
Gradually turn the adjuster screw (1) 2-3 notches at a time and the adjuster knob (2) 5-6 notches at a time.
Test the vehicle repeatedly on the road until you have determined the optimum setting.

⚠ DANGER

Do not remove the plug (4) for any reason. Do not tamper with the valve. Doing either of these things will destroy the function of shock absorber which can lead to an unstable, unsteady ride, with subsequent upset, accident and serious injury or even death. Observe the instructions above. Never ride your motorcycle with a defective or improperly adjusted rear shock absorber.

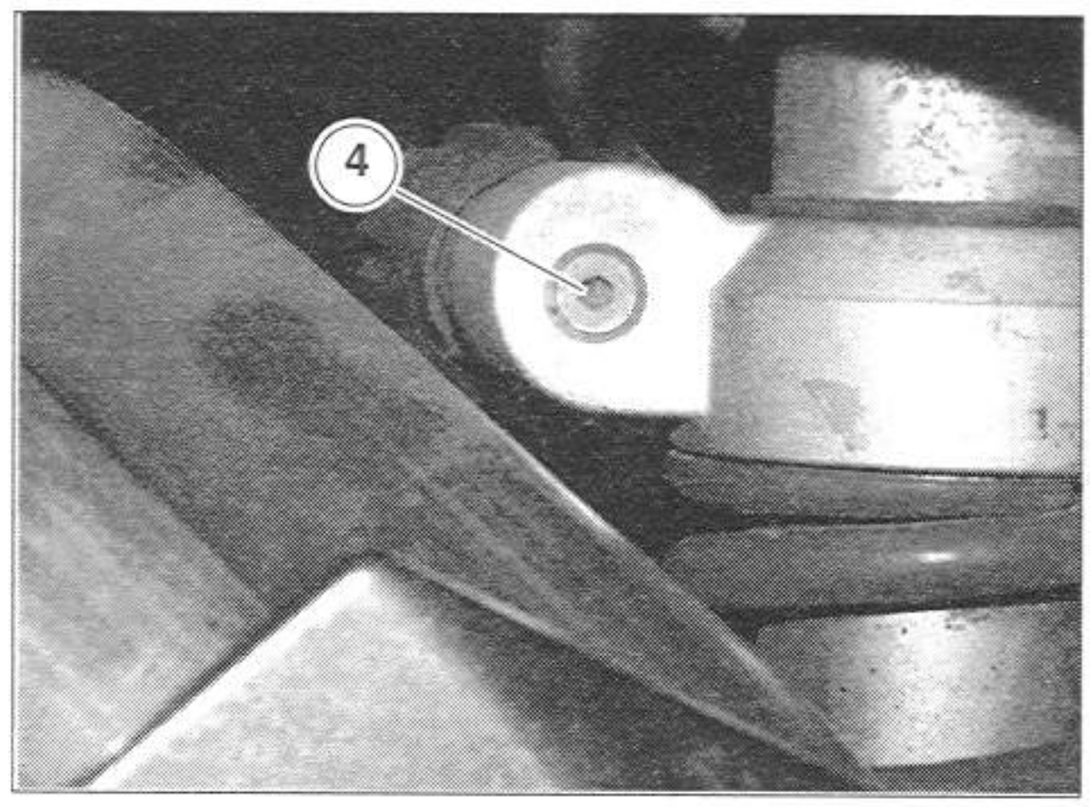

REAR SHOCK ABSORBER ADJUSTMENT TABLE

Rear suspension	Standard setting	Soft setting	Rigid setting	Medium setting
Hydraulic adjustment in extension (1)	from fully closed (*) open (**) 9 notches	from fully closed (*) open (**) 10 notches	from fully closed (*) open (**) 8 notches	from fully closed (*) open (**) 7 notches
Spring preload knob (2)	from fully open (**) close (*) 14 notches	from fully open (**) close (*) 4 notches	from fully open (**) close (**) 22 notches	from fully open (**) close (**) 34 notches

(*) =clockwise
(**) =counter-clockwise

2.31.3 CHECKING THE REAR SUSPENSION LINKAGE

Carefully read 1.3.9 (PRECAUTIONS AND GENERAL INFORMATION).

Check the condition of the bearings every 30,000 km (18,750 mi).

NOTE Ask someone to help you hold the vehicle upright.

- Firmly grasp the rear of the vehicle, press downward and release several times.
- If the movement is not smooth and is accompanied by creaking, and/or if you notice any play, replace the bearings of the rear suspension linkage, see 7.10.2 (DISASSEMBLING THE REAR SUSPENSION LINKAGE).
- If, after you pressed the vehicle downwards, it returns to its original position very slowly, check whether the rear suspension is adjusted correctly, see 2.31.2 (REAR SHOCK ABSORBER ADJUSTMENT).

If the problem persists even after adjusting, it means that the shock absorber is discharged; you should therefore recharge it.

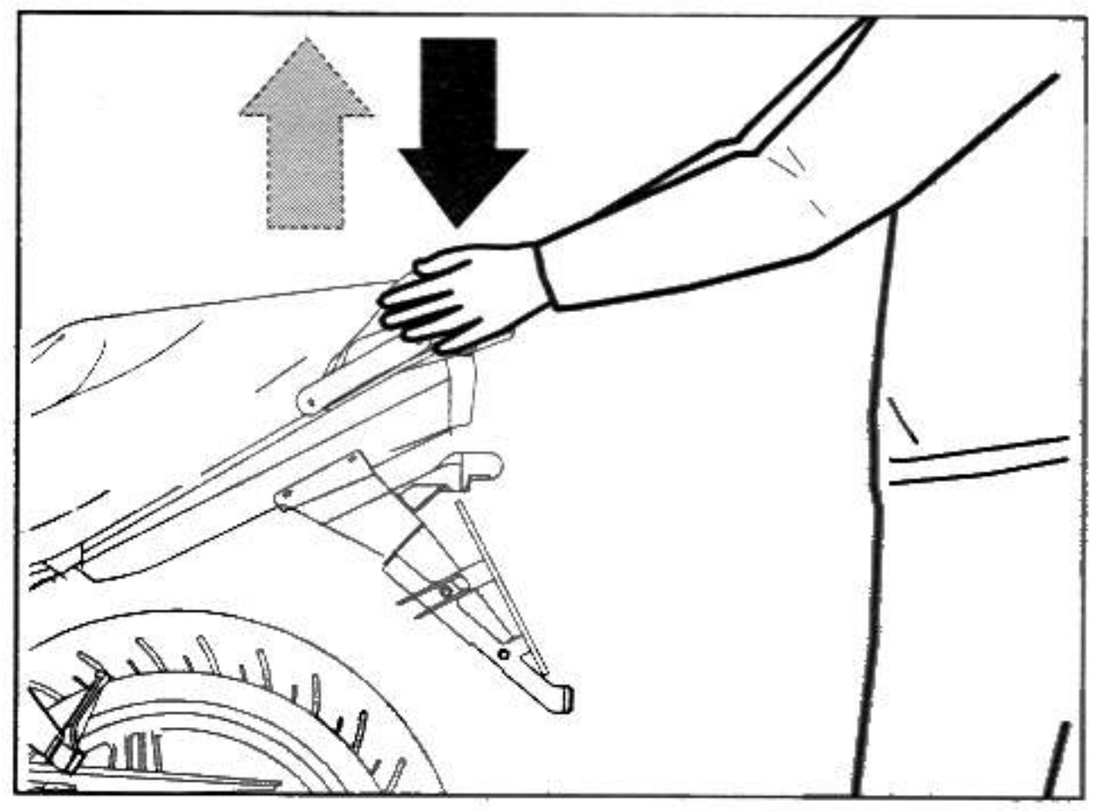

2.32 FRONT WHEEL

Carefully read 1.3.9 (PRECAUTIONS AND GENERAL INFORMATION).

Check every 4687 mi (7500 km).

- Place the vehicle on the appropriate front support stand OPT, see 1.15.1 (PLACING THE VEHICLE ON THE FRONT SUPPORT STAND).
- Spin the wheel in both directions by hand.
- Make sure the wheel turns smoothly and without interference and/or noise. If not, replace the bearings, see 7.2.2 (DISMANTLING THE WHEEL).
- Should you notice any wobble as the wheel spins, check the components in question, see 7.2.3 (CHECKING THE COMPONENTS).
- If, after repeated spinning, the wheel comes to a stop in the same position, it must be balanced.

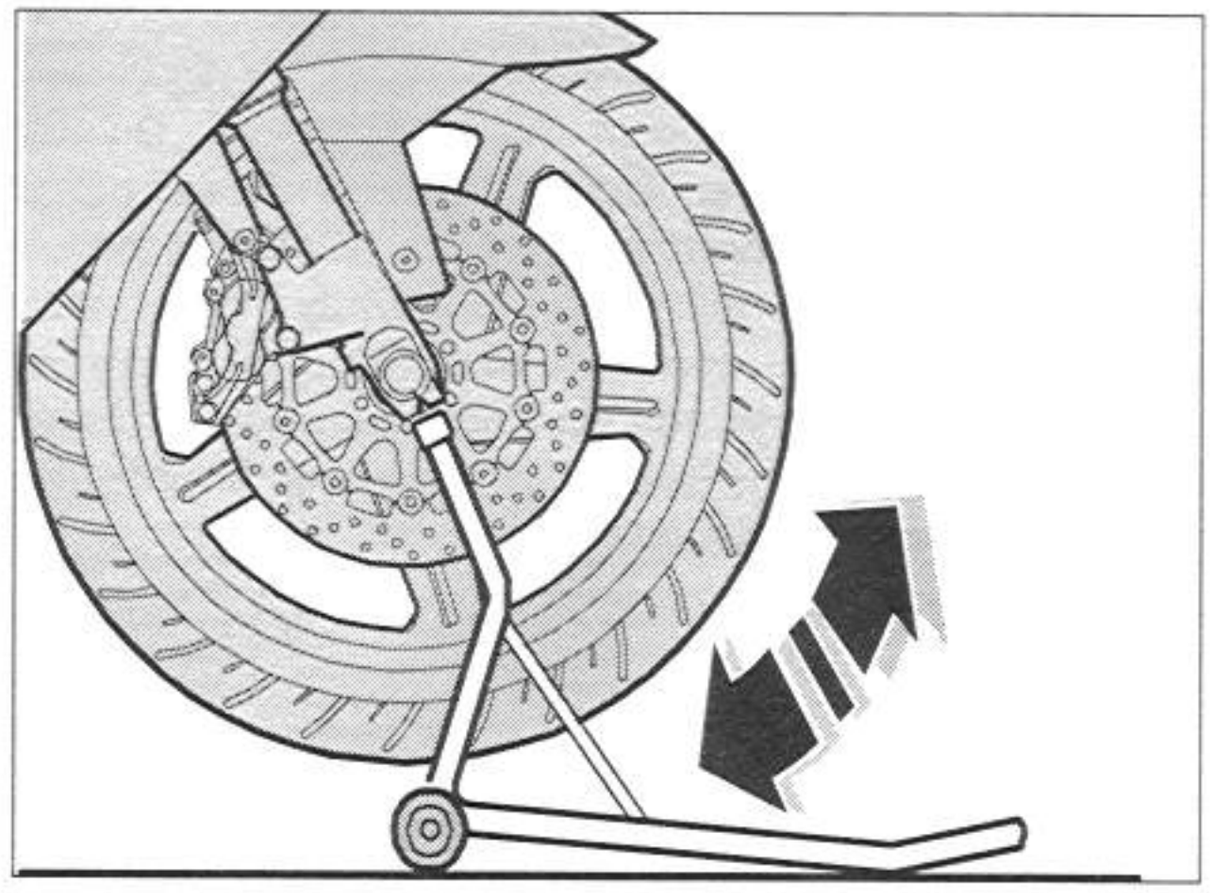

2.33 REAR WHEEL

Carefully read 0.5.1 (PRECAUTIONS AND GENERAL INFORMATION).

Check every 4687 mi (7500 km).

- Place the vehicle on the center stand.
- Spin the wheel in both directions by hand.
- Make sure the wheel turns smoothly and without interference and/or noise. If not, replace the bearings, see 7.2.2 (DISMANTLING THE WHEEL).
- Should you notice any wobble as the wheel spins, check the components in question, see 7.2.3 (CHECKING THE COMPONENTS).
- If, after repeated spinning, the wheel comes to a stop in the same position, it must be balanced.

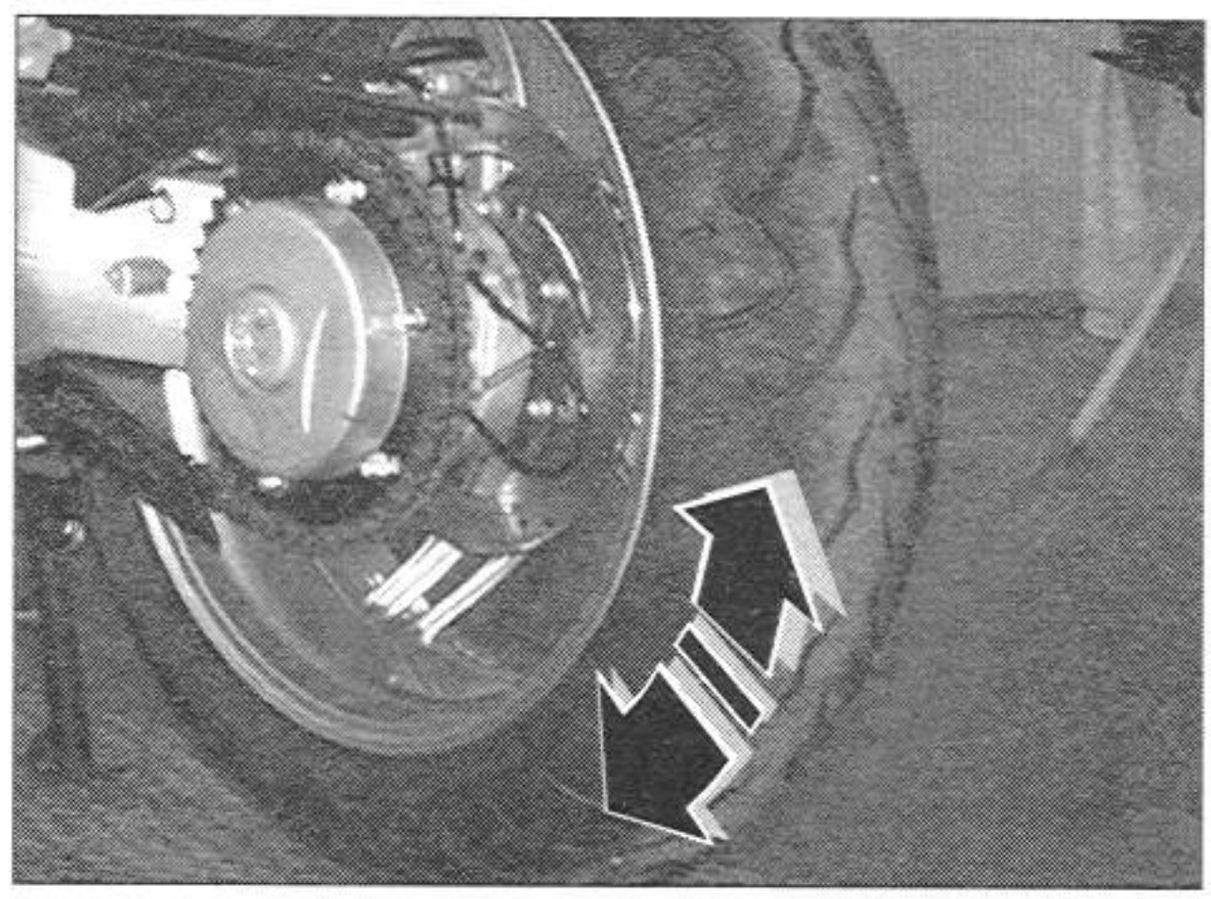

2.34 EXHAUST MANIFOLD NUTS

Carefully read see 1.3.9 (PRECAUTIONS AND GENERAL INFORMATION).

Tighten the exhaust manifold nuts after the first 625 mi (1000 km), and every 4687 mi (7500 km) or 8 months thereafter.

⚠ DANGER

Let the engine cool down to ambient temperature.

- Remove the side fairings, see 7.1.28 (REMOVING THE SIDE FAIRINGS).
- Remove the front grille, see 7.1.35 (REMOVING THE RADIATOR SPOILER).
- Torque the three nuts (1) of the front cylinder exhaust manifold to specification.
- Torque the three nuts (2) of the rear cylinder exhaust manifold to specification.

Tightening torque for nuts (1-2): 18.44 ftlb (25 Nm).

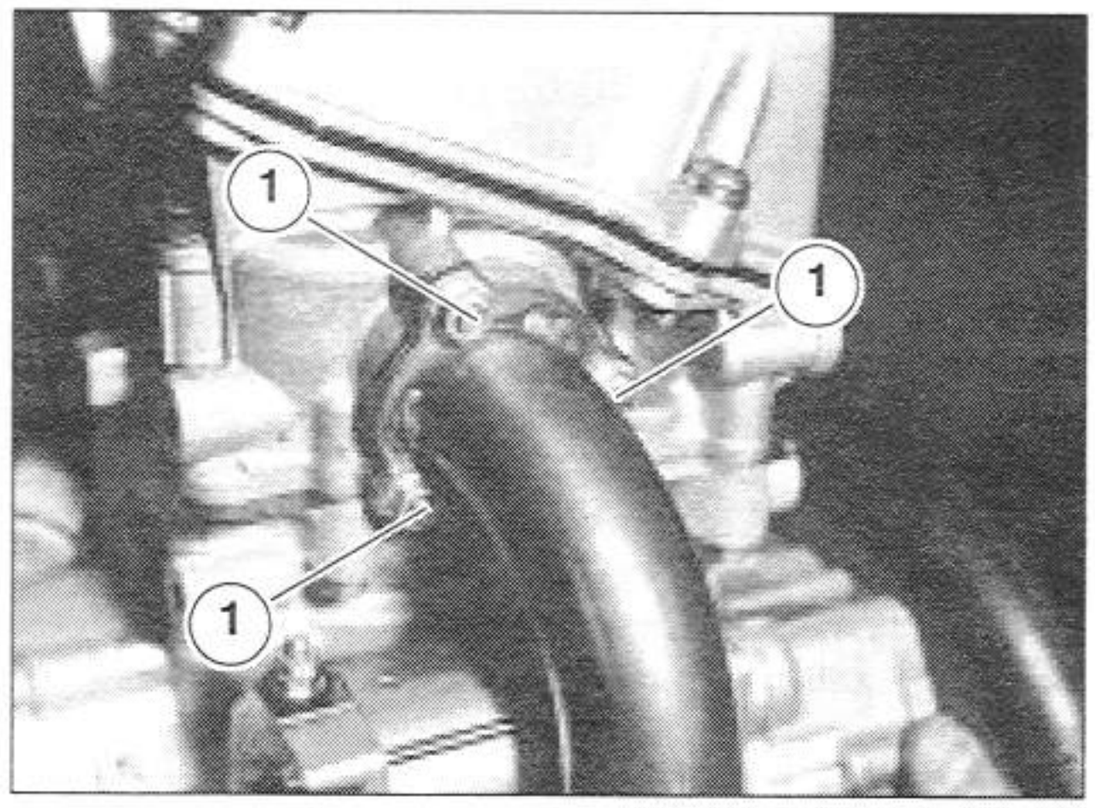

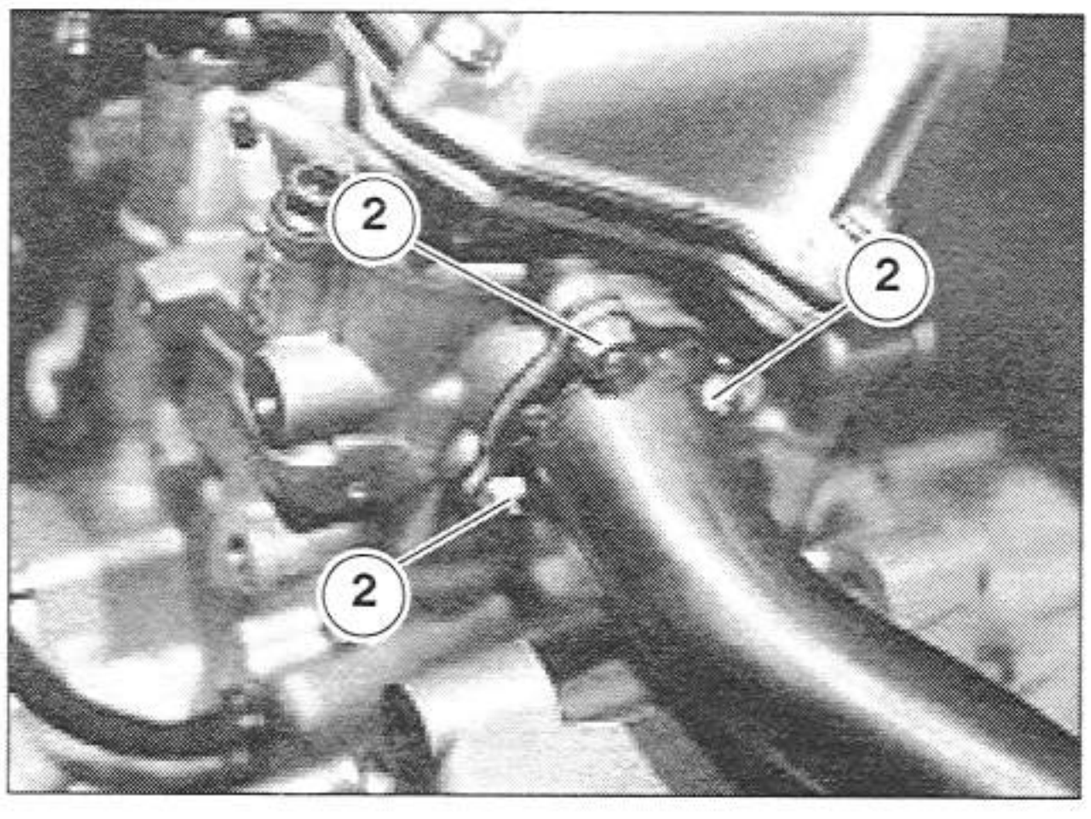

2.35 DRIVE CHAIN

Carefully read 1.3.9 (PRECAUTIONS AND GENERAL INFORMATION).

⚠ DANGER

Riding your motorcycle with a worn-out, improperly adjusted, dirty, rusty, or otherwise defective chain can cause the chain to come off of either the front or rear sprocket, which will jam and cause the rear wheel to lock. This can lead to loss of control, an upset, and subsequent accident with serious injury or even death. Carefully observe the precautions and instructions given below. Never attempt to substitute a different type of chain for the original type of chain.

Check the drive chain every 625 mi (1000 km) and lubricate if needed. The vehicle is equipped with an endless chain. There is no master link used.
Type of chain: 525

⚠ WARNING

The drive chain is equipped with O-ring gaskets between the links, to keep the grease inside. Use utmost care when adjusting, lubricating, washing and changing the chain. Failure to observe this warning can destroy your chain.

- Place the vehicle on the center stand.
- Set the gearshift lever to neutral.
- Turn the rear wheel to check the chain play in other positions.
- Visually inspect the chain, making sure that the chain and sprockets show none of the defects listed below:
  - damaged rollers;
  - loose pins;
  - dry, rusted, crushed or seized links;
  - excess wear;
  - missing O-rings;
  - sprocket teeth excessively worn or damaged.

A quick check to determine the condition of the chain and sprockets may be made by grasping the chain and attempting to pull it away from the rear sprocket. If you can pull the chain away from the sprocket to the point where you can see between the chain side plates and the sprocket, the sprocket and chain are worn out, and both must be replaced.

⚠ DANGER

Keep your fingers and clothing well clear of the chain while you are adjusting it. Should you happen to get any body part pinched between the chain and the sprocket while you are turning the rear wheel, that body part will be severely mangled. Pay particular attention to keep your fingers clear. You will easily lose a finger, should you pinch it between the chain and the sprocket. We recommend wearing heavy leather gloves when carrying out these operations, however, be aware that even heavy leather gloves will not protect your fingers from being mangled, should they be caught between the chain and the sprocket.

⚠ WARNING

If the chain rollers are damaged, the pins loose and/ or the O-rings damaged or missing, you must replace the entire assembly (both sprockets and chain), see 7.4.1 (REMOVING THE FINAL DRIVE ASSEMBLY).

2.35.1 CHECKING THE PLAY

To check the chain play:

- Place the vehicle on the center stand.
- Set the gearshift lever to neutral.
- Make sure that the play is approximately 0.98 in (25 mm), at a point between the sprocket and countershaft sprocket in the lower chain run.
- Move the vehicle forward, to check the chain play in other positions as well; the clearance must remain constant throughout the wheel rotation.

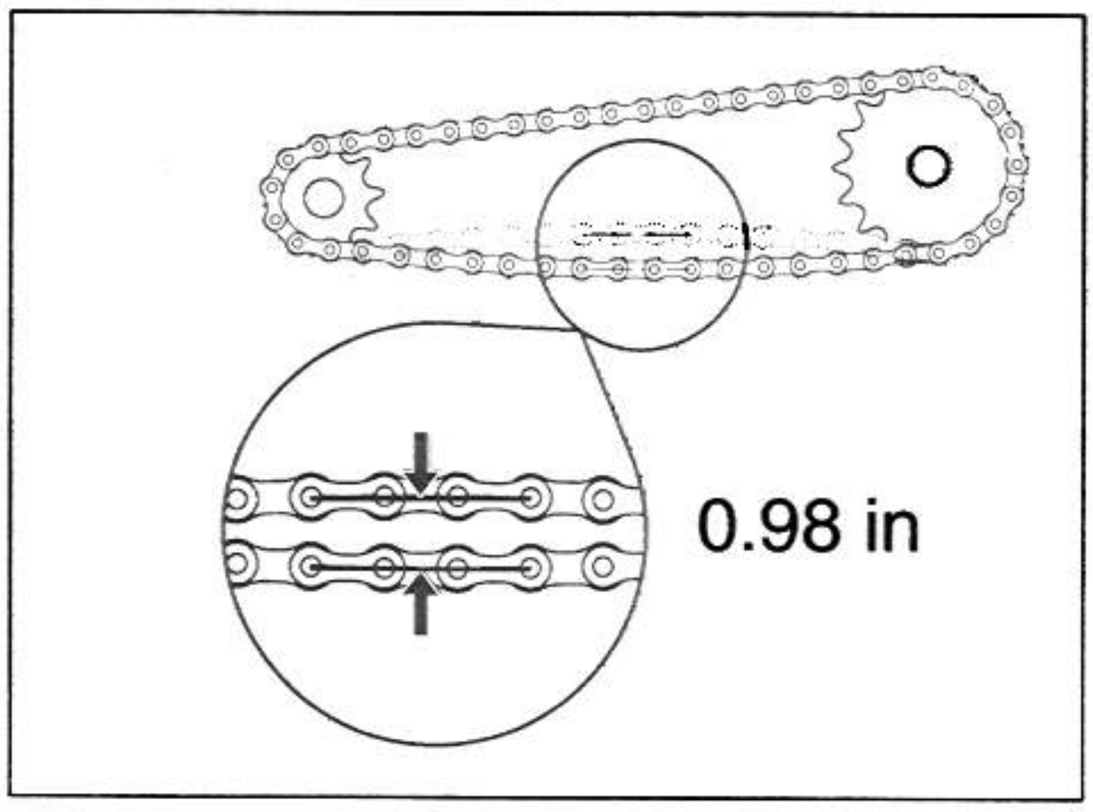

⚠ WARNING

If the clearance is greater in certain positions, this means that some of the links are crushed or seized up. To prevent the risk of seizing, lubricate the chain frequently, see 2.41.1 (CLEANING AND LUBRICATION).

If the clearance is even but more or less than 0.98 in (25 mm), adjust as needed, see 2.35.3 (ADJUSTING THE DRIVE CHAIN).

⚠ WARNING

An excessively loose chain may cause noise or make the chain rattle, with consequent wear of the shoe and of the chain guide plate. Lack of or incorrect maintenance can cause premature wear of the chain and/or damage the sprockets. Perform maintenance operations more frequently if the vehicle is used in harsh conditions, or on dusty, wet and/or muddy roads.

2.35.2 CHECKING THE WEAR OF THE CHAIN AND SPROCKETS

- Stretch the chain completely, see 2.35.3 (ADJUSTING THE DRIVE CHAIN).
- On one branch of the chain, count 17 pins (16 links) in the area between the sprockets, and measure the distance between the first and 17th pins.

If the distance is greater than the limit indicated below, replace the chain, see 7.11 (DISASSEMBLING THE DRIVE CHAIN).

Limit of wear: 10.06 in (255.5 mm) (MAX 0.5%).

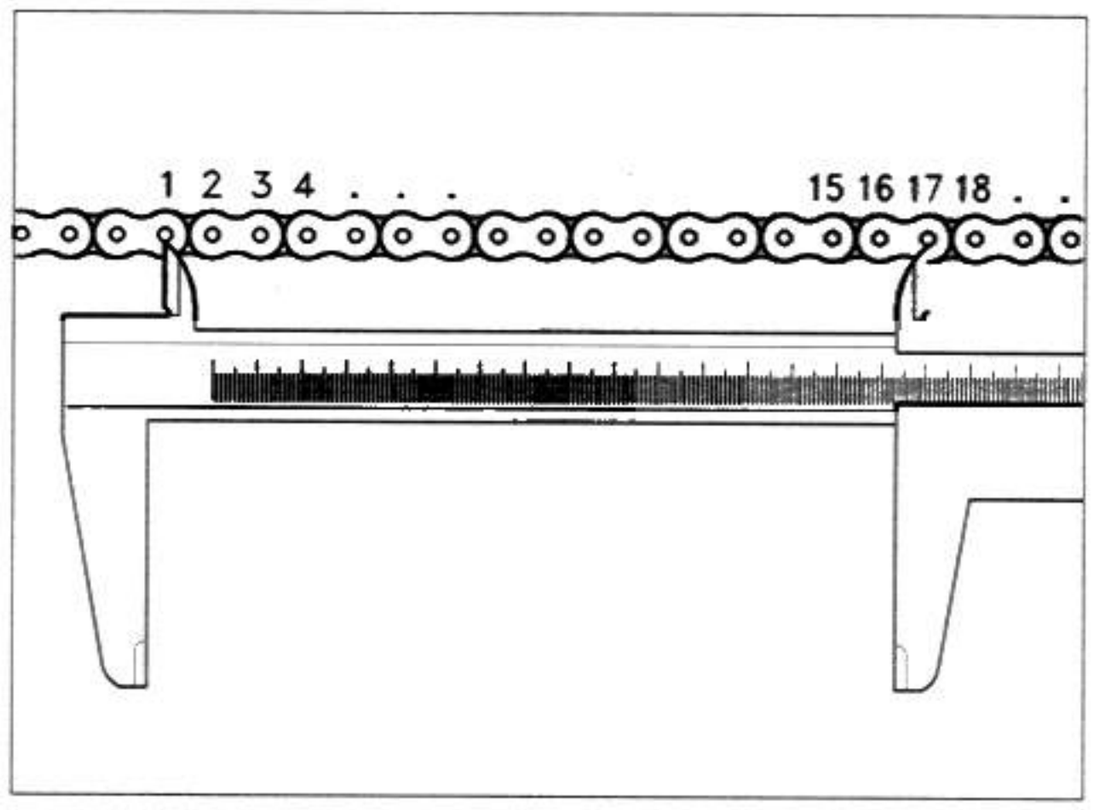

2.35.3 ADJUSTING THE DRIVE CHAIN

If the checks reveal the need to adjust the chain tension:

- Place the vehicle on the center stand.
- Loosen the bolts (1) completely.

NOTE Have on hand the pin wrench (2) supplied with the tool kit.

To loosen the chain:

- Insert the pin wrench (2) as shown in figure (A).

To tighten the chain:

- Insert the pin wrench (2) as shown in figure (B).

With the pin wrench (2) correctly inserted,

- hook the pin wrench (2) to the ring-nut (3).
- Insert the extension (4) in the pin wrench.
- Use the pin wrench (2) to adjust the chain clearance.
- Check the chain play, see 2.35.1 (CHECKING THE PLAY).
- Tighten the two screws (1).

Tightening torque for bolts (1): 25.81 ftlb (35 Nm).

Lubricate the chain every 625 mi (1000 km) and whenever necessary.

⚠ WARNING

After letting the chain dry, lubricate it thoroughly with spray grease specifically developed for O-ring chains, see 1.12 (LUBRICANT CHART).

NOTE Do not use the vehicle immediately after lubricating the chain, give the lubricant a chance to dry, otherwise the chain will spray the lubricant all over you and your vehicle.

⚠ WARNING

There are some chain lubricants available containing substances that will destroy the O-rings in your chain.
The standard chain is type 525.
When replacing the chain, use the same kind.

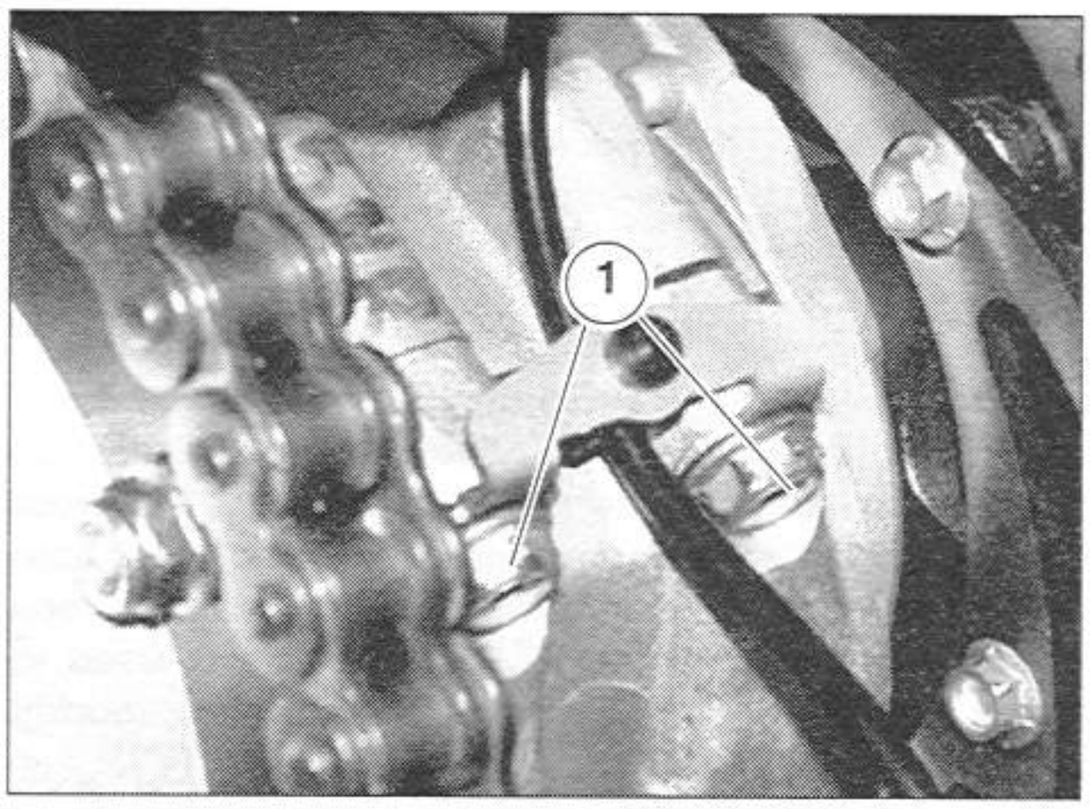

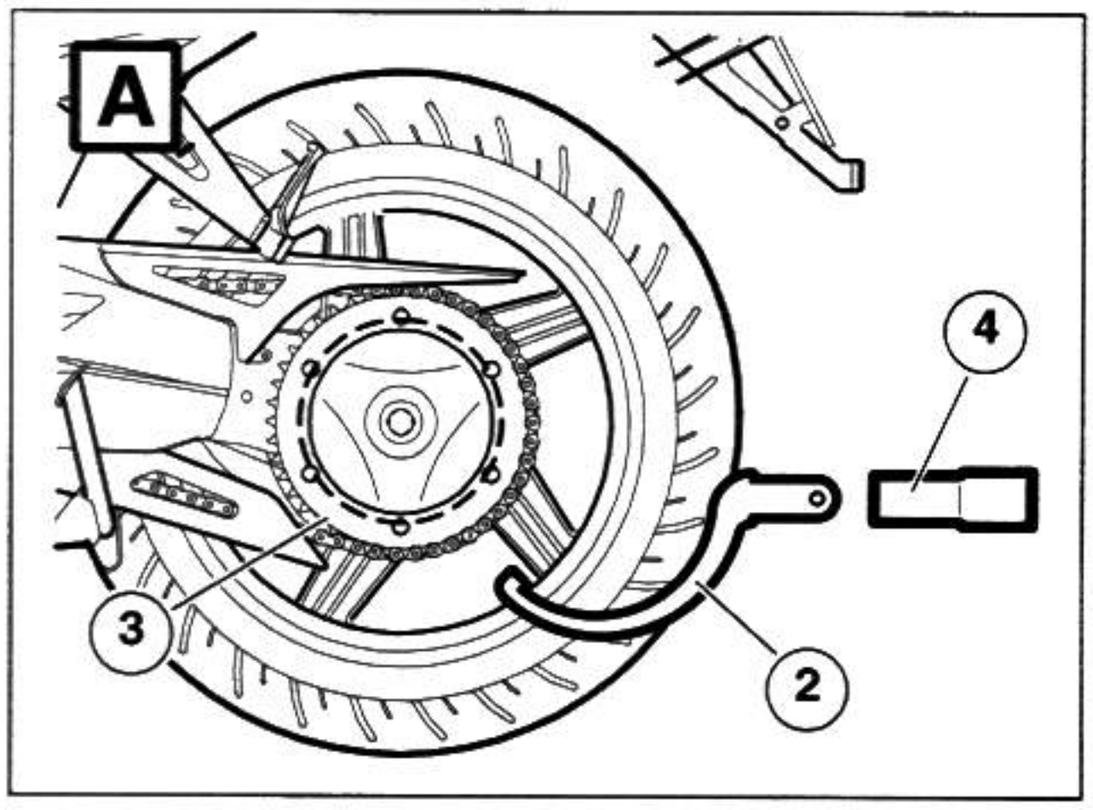

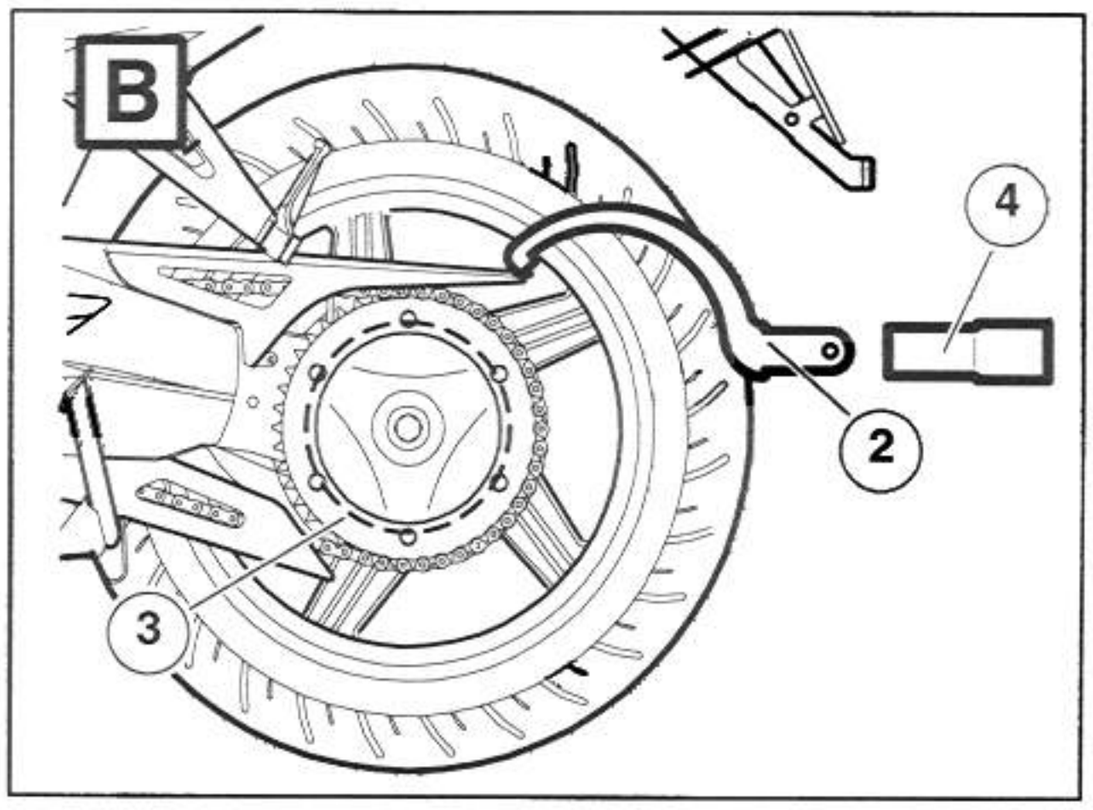

2.35.4 INSPECTING THE DRIVE CHAIN GUIDE PLATE

Carefully read 1.3.9 (PRECAUTIONS AND GENERAL INFORMATION).

- Place the vehicle on the stand.
- Remove the lower fairing, see 7.1.33 (REMOVING THE LOWER FAIRING).
- Unscrew and remove the two bolts (1).

Tightening torque for bolts (1): 7.37 ftlb (10 Nm).

- Remove the voltage regulator (2), leaving it connected to the main wiring.
- Remove the guard (3).
- Unscrew and remove the three screws (4) holding the voltage regulator mount (5).

Tightening torque for screws (4): 8.85 ftlbv (12 Nm).

- Retrieve the three bushings (6) and three shock mount grommets (7).
- Remove the housing (5) to retrieve the bushings.
- Loosen the screw (8) and extract the gearshift lever (9)
- Remove the clutch cylinder, see 3.2.1 (REMOVING THE CLUTCH CYLINDER).

NOTE Release the side stand switch cable.

- Remove the countershaft sprocket cover (10).
- Remove the guide plate (11).
- Make sure that the guide plate (11) is not worn or damaged; if so, replace it with a new one.

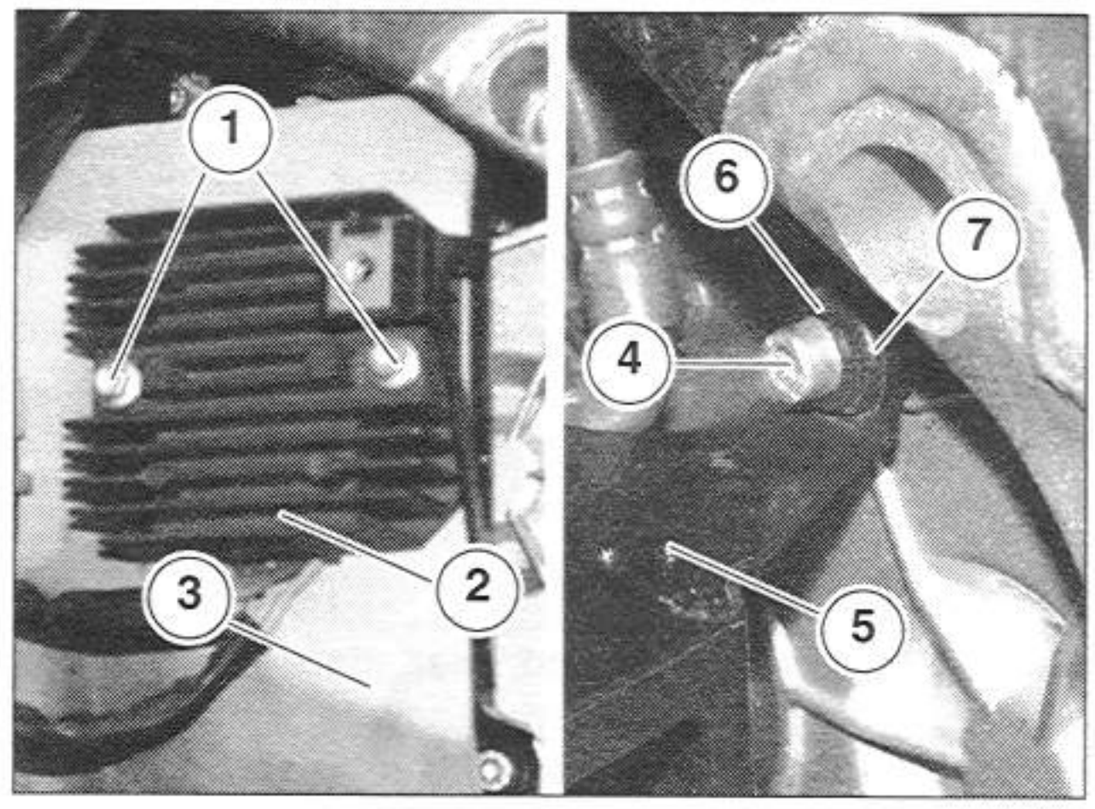

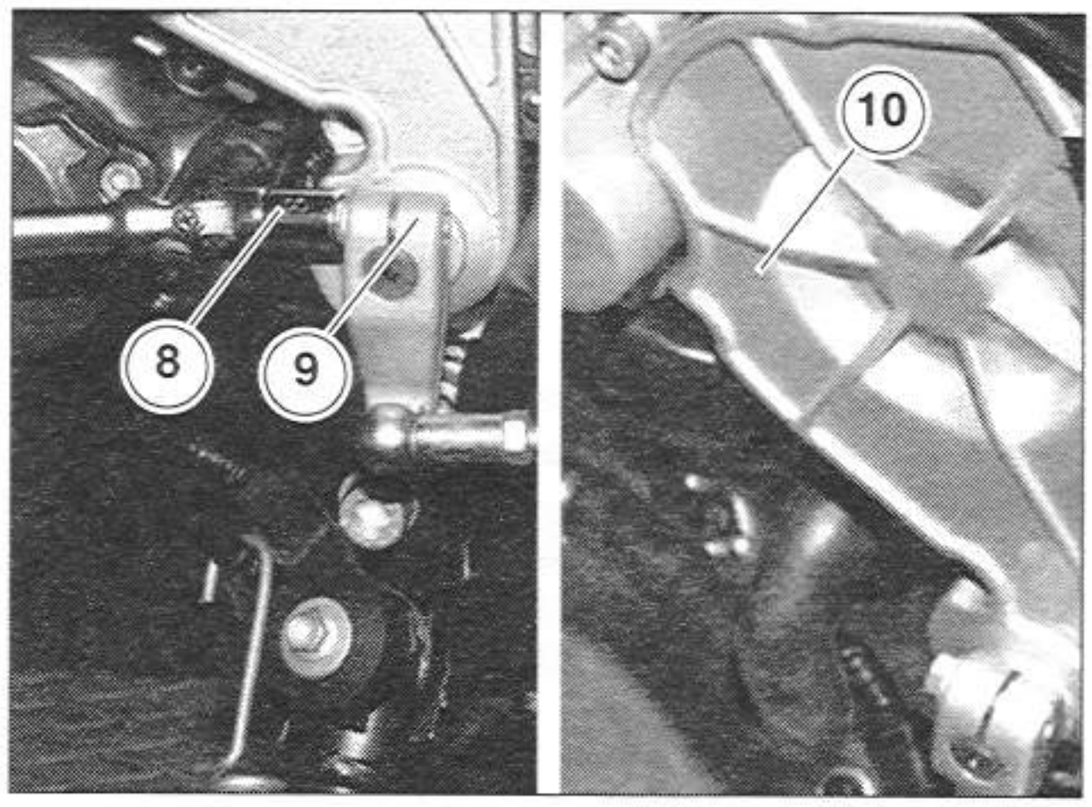

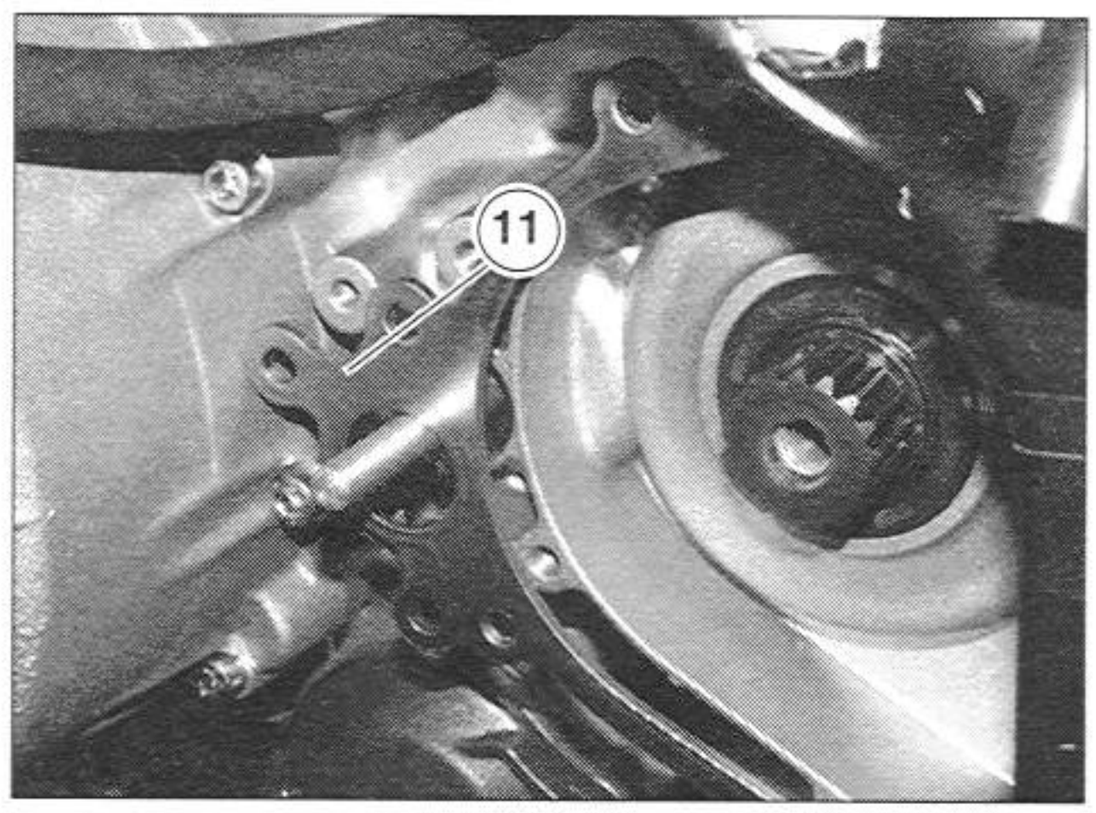

2.35.5 INSPECTING THE DRIVE CHAIN SHOE

- Place the vehicle on the center stand.
- Make sure that the shoe (1) is not worn or damaged. If so, replace it with a new one, see 7.1.57 (REMOVING THE DRIVE CHAIN SHOE).

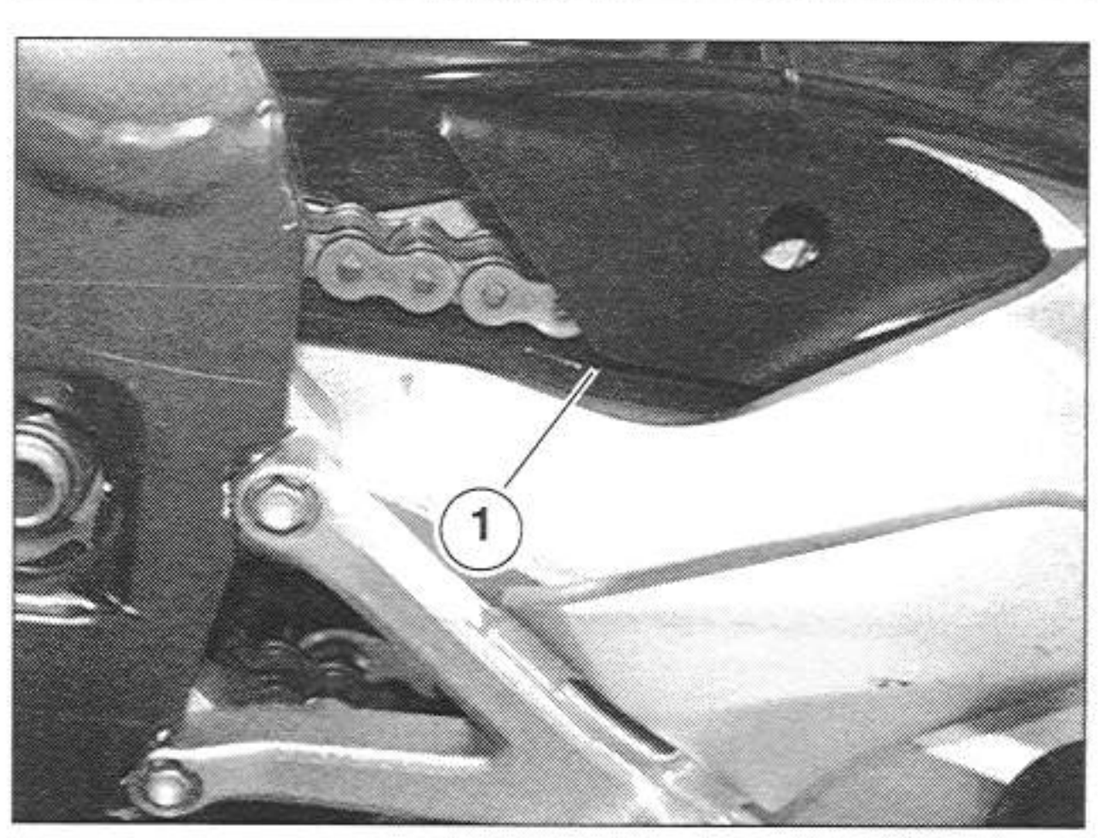

2.36 TIRES

Carefully read 1.3.9 (PRECAUTIONS AND GENERAL INFORMATION).

Check after the first 625 mi (1,000 km) and then every 4687 mi (7,500 km), or every 8 months, thereafter.
Check the inflation pressure every month, at ambient temperature.
This vehicle is equipped with tubeless tires.

TREAD CONDITION

⚠ WARNING

Check the surface state and wear, since tires in poor condition do not adhere properly to the road and adversely affect vehicle handling.
Replace the tire if worn or if the tread area contains any puncture larger than 5 mm across. Some types of tires, approved for use on this vehicle, come equipped with wear indicators.
Various kinds of wear indicators are available.
Ask your local dealer for instructions on how to check for wear.
Do not install tires with inner tube on rims for tubeless tires and vice-versa. Make sure the inflation valves (1) are always capped, to prevent the tires from deflating suddenly.
Changing, repairing, maintaining and balancing the tires are all very important tasks; they must therefore be carried out using the appropriate tools and expertise.
MINIMUM TREAD DEPTH LIMIT (A):

front e rear ..... 0.12 in (3 mm).

INFLATION PRESSURE

Periodically check the inflation pressure of the tires at ambient temperature.
If the tires are warm, the measurement will not be correct. Always measure before and after any long trips.
If the inflation pressure is too high, the shocks of rough terrain are not absorbed and are transmitted to the handlebars, making for an uncomfortable ride and also diminishing the vehicle's ability to adhere to curves.
If the tire is underinflated (pressure is too low), the sidewalls (2) are under greater stress and the tire itself may slip or detach from the rim with consequent loss of control. The tires may slip off the rims if the rider brakes suddenly.
Finally, the vehicle may skid on curves.

Inflation pressure, see 1.11 (SPECIFICATIONS).

⚠ WARNING

After repairing a tire, have the wheel balanced.
If the tires are new, they may be covered with a slippery coating; drive carefully for the first few miles.

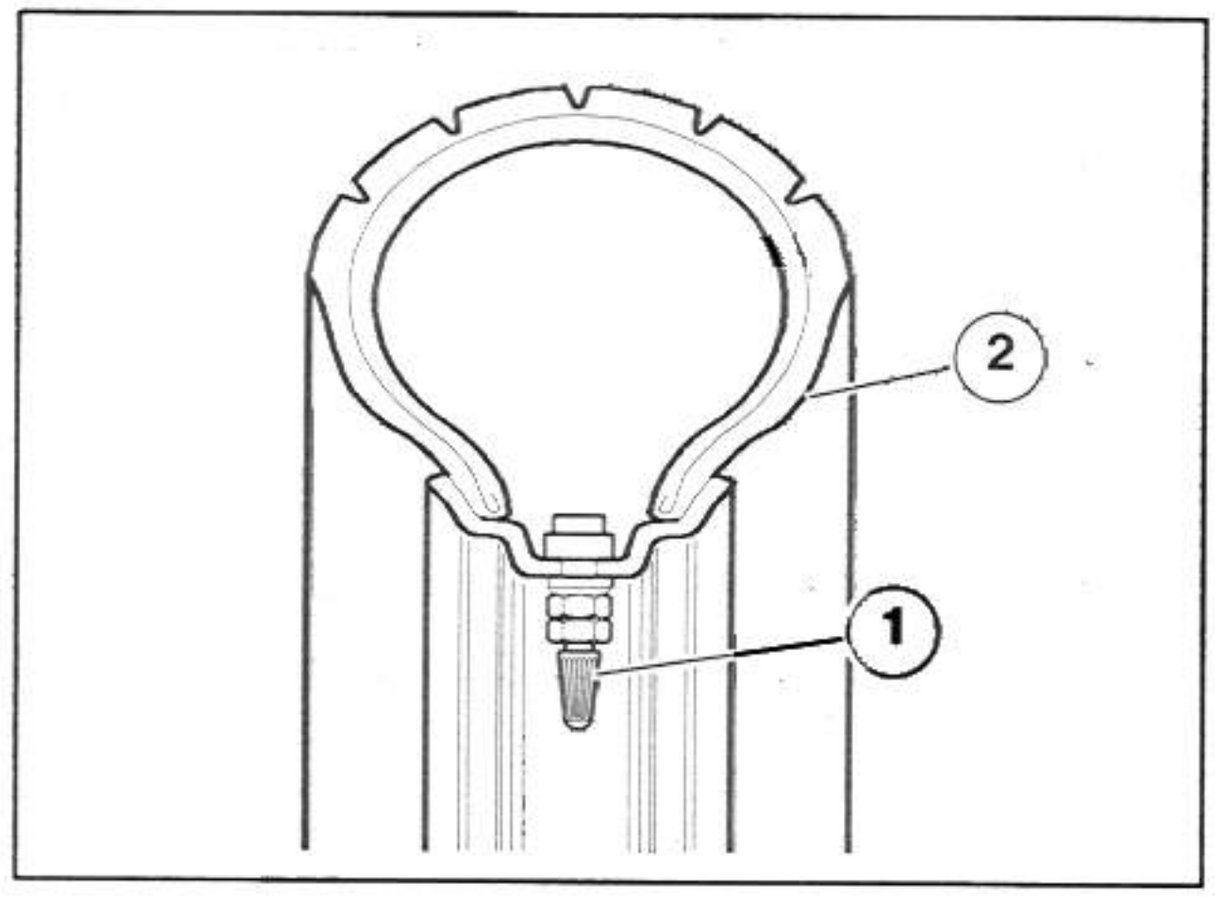

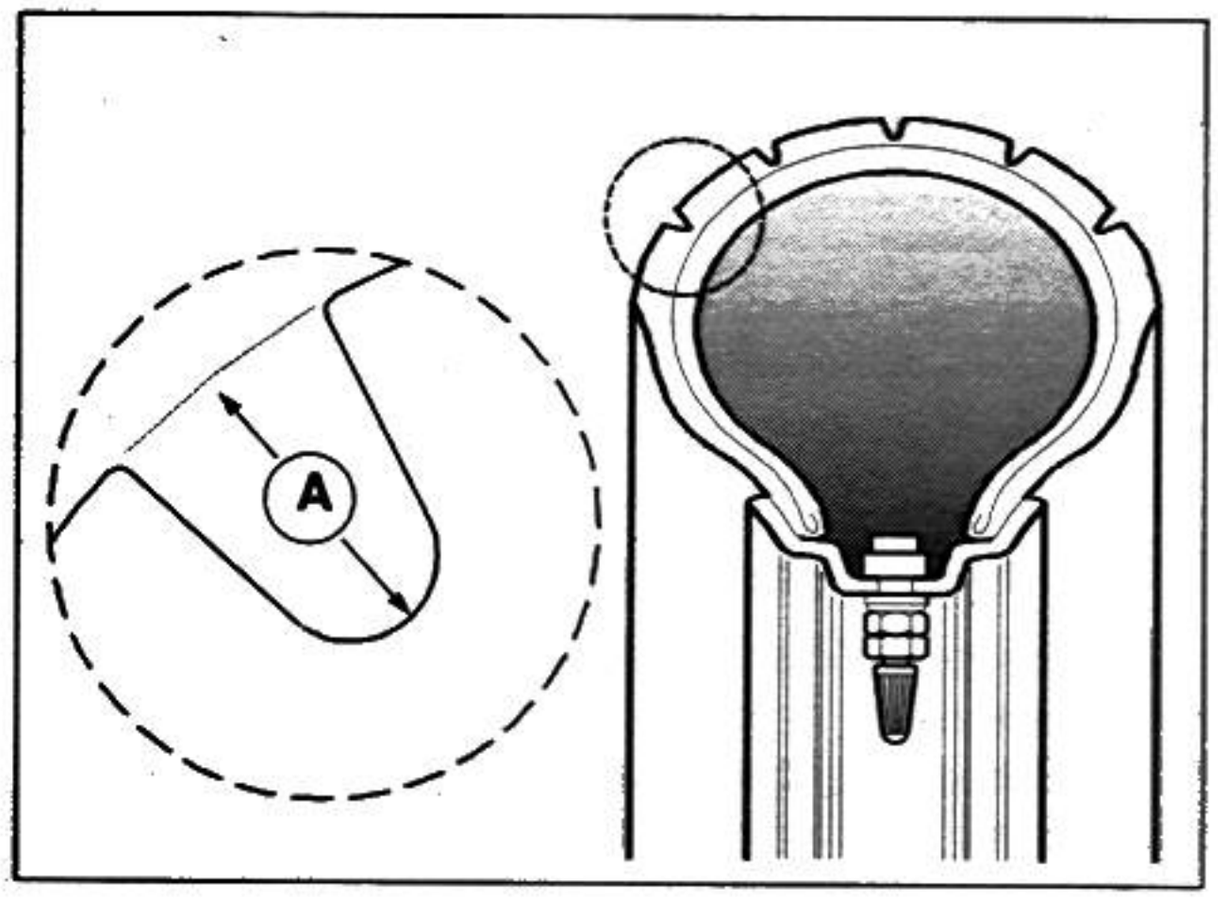

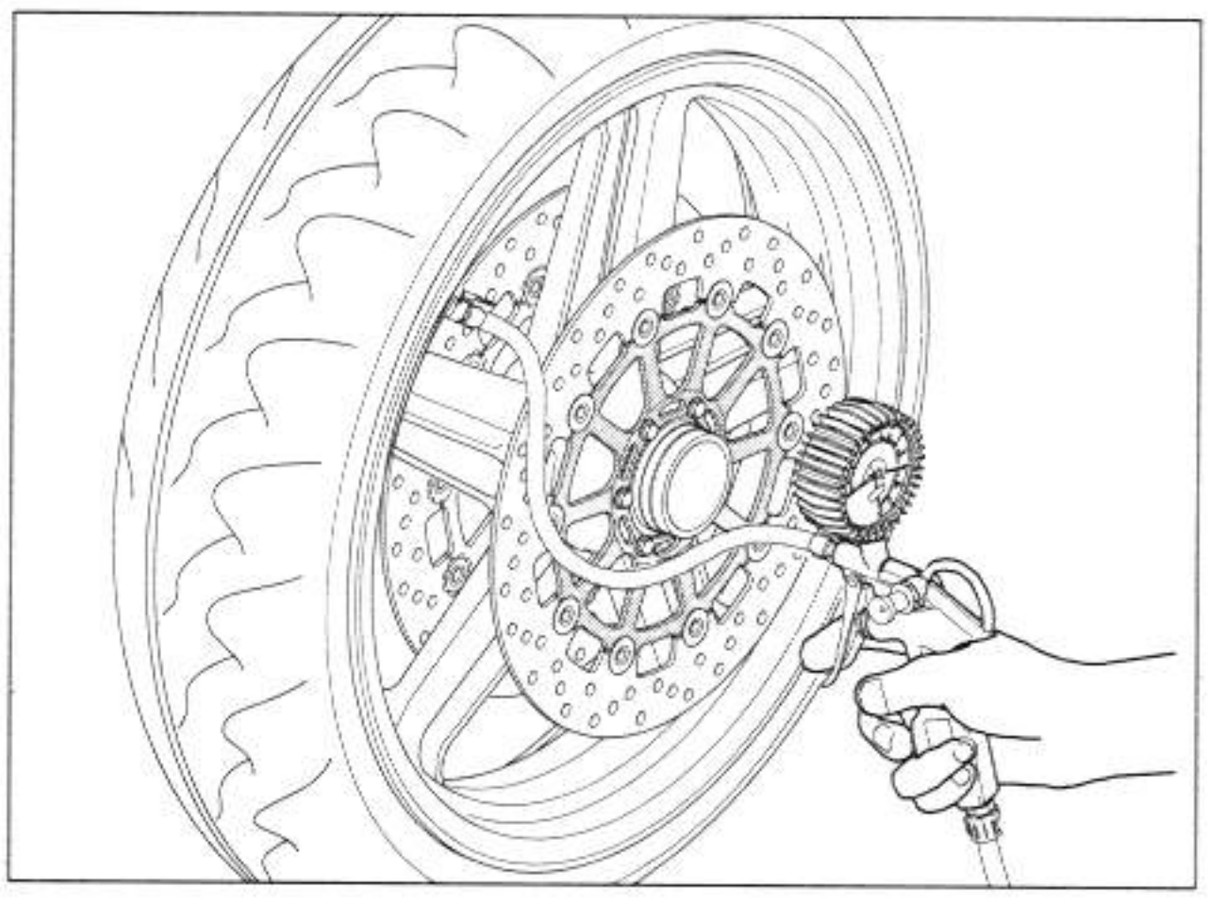

Do not grease the tires with inappropriate substances.
The appropriate tire size is listed on the vehicle registration. It is a punishable offense to use any other size tire.
The use of tires other than those indicated may adversely affect the handling and overall safety of the vehicle.
Use only the tires originally selected by aprilia, see 1.11 (SPECIFICATIONS).

2.37 FUEL LINES

Carefully read 1.4.1 (FUEL).

Check the fuel lines every 4687 mi (7500 km) or every 8 months.
Replace every four years.
Replace the fuel lines if you find any signs of wear, cracks, etc.
- High-pressure delivery line (1) [~ 4.7 PSI(450 kpa) (4.5 bar)].
- Return line (2).

NOTE Make sure that the male quick-release coupling (3) has been correctly inserted into the container (4).

For more information, see sect. 4 (FUEL SYSTEM).

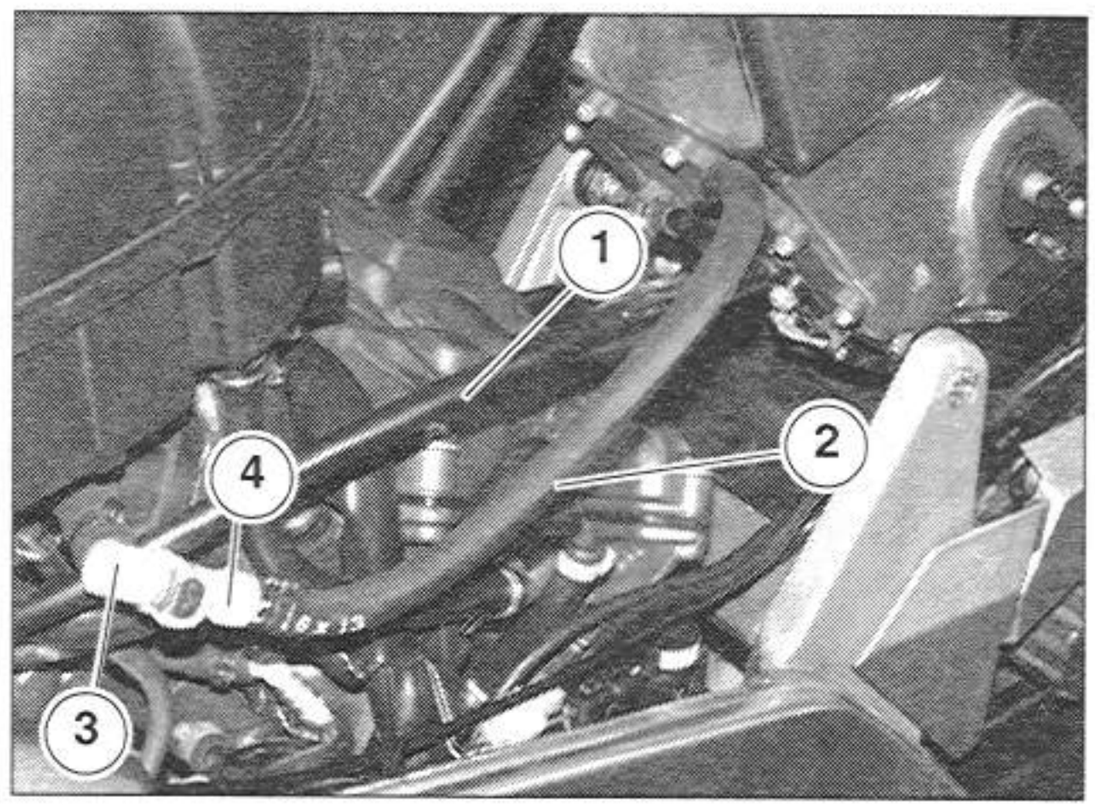

2.38 BRAKE AND CLUTCH CONTROL LINES

Carefully read 1.4.3 (BRAKE) and 1.4.5 (CLUTCH CONTROL FLUID).
Check the lines every 4687 mi (7500 km) or every 8 months.
Replace every four years.

Replace the lines if you find any signs of wear, cracks, etc.

2.39 COOLING SYSTEM PIPES

Carefully read 1.4.6 (COOLANT).

Check the cooling system pipes every 4687 mi (7500 km), or every 8 months.

Replace the cooling system lines if you find any signs of wear, cracks, etc.

2.40 TIGHTENING NUTS AND BOLTS

Carefully read 1.3.9 (PRECAUTIONS AND GENERAL INFORMATION).

Check after the first 625 mi (1,000 km) and then every 4687 mi (7,500 km) or every 8 months thereafter.
Carefully check all fasteners, especially those components essential to safety. Specifically:
- right/left handlebars;
- front brake lever;
- clutch lever;
- fuel delivery line;
- front fork to plates;
- front fork/wheel axle clamps;
- front wheel;
- front brake line fittings;
- front brake discs;
- front brake calipers;
- engine;
- countershaft sprocket;
- rear brake lever;
- swinging arm;
- swinging arm leverage;
- rear shock absorber;
- rear wheel;
- rear brake disc;
- rear brake caliper;
- rear brake line fittings.

⚠ WARNING

The fasteners must be torqued to specification and LOCTITE® applied ONLY where indicated, see 2.41 (FASTENERS).
Lubricate only the parts indicated in table 2.41 (FASTENERS).

2.41 FASTENERS

Check after the first 625 mi (1,000 km) and then every 4687 mi (7,500 km) or every 8 months thereafter; tighten if necessary.

⚠ WARNING

The fasteners listed in the table must be torqued to specification using a torque wrench and LOCTITE® where indicated.
The elements marked ( ) are especially important to safety.

ENGINE					
Engine/Frame Fastening					
Description	**Qty.**	**Screw / nut**	**ftlb**	**Nm**	**Notes**
Front fitting	2+2	M10	36	50	
Left-side upper and lower rear fitting	2	M10	36	50	
Adjusting bushing right side upper and lower rear fitting	2	M20x1.5	8	12	lub
Lock ring right side upper and lower rear fitting	2	M20x1.5	36	50	
Screw right side upper and lower rear fitting	2	M10	36	50	
Engine fasteners					
Description	**Qty.**	**Screw / nut**	**ftlb**	**Nm**	**Notes**
Engine oil inlet flange	2	M6	8	12	
Engine oil drain cap	**2**	**M6**	**8**	**12**	
Countershaft sprocket on gearbox shaft fastener	**1**	**M10**	**36**	**50**	**L243**
Clutch cylinder fastener	3	M6	8	12	
Countershaft sprocket case fastener	3	M6	8	12	
Guard plate on clutch cover	2	M5	3.6	5	
SWINGING ARM					
Description	**Qty.**	**Screw / nut**	**ftlb**	**Nm**	**Notes**
Bushing for adjusting swinging arm pivot	**1**	M30x1.5	8	12	lub
Swinging arm pivot lock ring	**1**	**M30x1.5**	**43.4**	**60**	
Swinging arm pivot nut	1	**M20x1.5**	**65**	**90**	
caliper support stop pivot	**1**	**M14x1.5**	**43.4**	**60**	**L243**
Chain shoe on swinging arm	2	M5	2.9	4	L243
Upper and lower chain guard on swinging arm	7	M5	2.9	4	L243
Eccentric locking screw	2	M10	25.8	35	
Brake line fairlead fastener	1	M5	2.9	4	
Axle anti-rotation screw	1	M6	7.3	10	L243
SIDE STAND					
Description	**Qty.**	**Screw / nut**	**ftlb**	**Nm**	**Notes**
Stand plate to frame fastener	2	M10	29	40	
Stand fastening pin	1	M10x1.25	7.3	10	
Switch fastening screw	1	M6	7.3	10	L243
Lock nut	1	M10x1.25	21.7	30	

CONT'D ➤

CENTER STAND					
Description	**Qty.**	**Screw / nut**	**ftlb**	**Nm**	**Notes**
Center stand to frame fastener	2	M10	36	50	L243
FRONT SUSPENSION					
Front fork					
Description	**Qty.**	**Screw / nut**	**ftlb**	**Nm**	**Notes**
Fork head/fork tubes fastener	1+1	M8	18	25	
Triple clamp/fork tubes fastener	2+2	M8	18	25	
Steering column ring-nut	1	M35x1	29	40	
Steering column locking ring nut	1	M35x1	man. +90°		
Fork head upper retainer	1	M29x1	88.5	120	
Triple clamp steering bush fastening screw	1+1	M8	16.2	22	
Closing of fork/wheel axle clamps	2-2	M8	16.2	22	
Key block on fork head	2	M8	18	25	
REAR SUSPENSION					
Damper absorber					
Description	**Qty.**	**Screw / nut**	**ftlb**	**Nm**	**Notes**
Damper absorber/frame fastener	1	M10	33.2	45	lub
Linkage					
Single connecting rod to frame fastener	1	M10	33.2	45	lub
Single/double connecting rod to frame fastener	1	M10	33.2	45	lub
Double connecting rod fork fastener	1	M10	33.2	45	lub
Double connecting rod/shock absorber fastener	1	M10	33.2	45	lub
ELECTRICAL SYSTEM					
Description	**Qty.**	**Screw / nut**	**ftlb**	**Nm**	**Notes**
Battery clamping bracket fastener	2	M5	3.6	5	
Horn mount fastener	1	M8	18	25	
Speed sensor fastener	1	M6	7.3	10	L243
Taillight fastener	3	M6	5.2	7	
Electronic unit fastener	5	M6	7.3	10	
Voltage regulator fastener	2	M6	8	12	
Headlight fastener to front fairing	2	M5	1.4	2	
	2	SWP 3.9	0.7	1	
Coil mount to frame fastener	4	M6	7.3	10	
Fuse box to dashboard/front fairing mount fastener	2	M5	1.4	2	L243
Relay cable to starter motor fastener	1	M6	3.6	5	
Earth to engine fastener	1	M6	7.3	10	
Relay cables	2	M6	3.6	5	

CONT'D ➤

AIR FILTER CASE					
Description	Qty.	Screw / nut	ftlb	Nm	Notes
Air filter case cover fastener	7	M5	1.4	2	
Air filter case to throttle body fastener	6	M6	5.2	7	lub
Intake ducts fastener to filter case fastener	4	SWP3.9	0.7	1	
Idle speed adjustment motor	2	M5	2.9	4	L243
Filter box fastener plate on frame	2	M6	3.6	5	
Filter box reducer diaphragm	1	SWP3.9	0.7	1	

FRONT WHEEL					
Description	Qty.	Screw / nut	ftlb	Nm	Notes
Wheel axle nut	1	M25x1.5	59	80	Ingr.

REAR WHEEL					
Description	Qty.	Screw / nut	ftlb	Nm	Notes
Sprocket to sprocket holder fastener	6	M8	18	25	
Wheel axle nut	1	M40x1.5	125.3	170	Ingr.
Flexible couplings to pivot screw fastener	1	M30x1.5	110.6	150	Ingr.
Flexible coupling safety screw	3	M3	0.8	1.2	
Wheel screw cover	1	M10	7.3	10	lub "O-ring"

COOLING SYSTEM					
Description	Qty.	Screw / nut	ftlb	Nm	Notes
3-way manifold closing screw	1	M14x1.5	21.7	30	L572
Electric fan mount fastener	2+2	M6	4.4	6	
Electric fan motor to mount fastener	3+3	SWP3.9	0.7	1	L243
Radiator coolant drain plugs	1+1	M6	7.3	10	L572
Expansion tank to coils mount fastener	2	M6	5.9	8	
Expansion tank cap fastener	1	M28x3	man		
Coolant filler neck fastener to radiator	1	M6	7.3	10	
Rear expansion tank to frame fastener	1	M6	7.3	10	
Radiator mounts on frame	6	M6	7.3	10	
Oil radiator on mount	3	M6	7.3	10	
Water radiators on mount	2	M6	7.3	10	

BRAKE SYSTEMS					
Front Brake System					
Description	Qty.	Screw / nut	ftlb	Nm	Notes
Right and left brake caliper fastener	2+2	M10x1.25	36	50	lub
Brake discs fastener	6+6	M8	21.7	30	L243
Front brake line fastener	3	M10x1	14.5	20	
Three-way brake line bracket on steering plate	1	M5	2.2	3	

CONT'D ➤

Rear Brake System					
Description	**Qty.**	**Screw / nut**	**ftlb**	**Nm**	**Notes**
Brake caliper fastener	1	M8	18	25	
Brake lever on platform mount	1	M8	10.8	15	L243
Pedal on brake lever	1	M8	18	25	L270
Brake master cylinder fastener	2	M6	7.3	10	
Brake master cylinder control rod lock nut	1	M6	man		
Brake disc fastener	6	M8	21.7	30	L243
Brake line fastener	2	M10x1	14.5	20	
Stop switch on rider footrest mount	1	M6	7.3	10	
EXHAUST SYSTEM					
Description	**Qty.**	**Screw / nut**	**ftlb**	**Nm**	**Notes**
Exhaust pipe to engine fastener	3+3	M8	18	25	
Exhaust muffler fastener	1	M6	7.3	10	
Equalizer on frame	1	M8	18	25	L243
Stand striker grommet on equalizer	1	M6	7.3	10	
Handle grip on lt pipe	2	M6	4.4	6	
Click-clamp on muffler engagement	2	M6	10.8	15	sil
FUEL TANK					
Description	Qty.	Screw / nut	**ftlb**	**Nm**	**Notes**
Pump mount to fuel delivery line fastener	1	M12x1.5	16.2	22	
Cap to tank fastener	7	M5	3.6	5	
Fuel pump flange fastener to tank	8	M5	4.4	6	L518
Front tank to frame fastener	2	M6	5.9	8	lub
Tank cover	2	M5	2.2	3	
Fuel rail on fuel line	2	M5	3.6	5	
ENGINE OIL RADIATOR AND TANK					
Description	**Qty.**	**Screw / nut**	**ftlb**	**Nm**	**Notes**
Oil tank on mounts	3	M6	7.3	10	
Oil filter	1	M25x1.5	man.		
Oil drain cap	1	M8	10.8	15	
Oil level gauge fittings	2	M10x1	14.5	20	
FRONT BODY					
Description	**Qty.**	**Screw / nut**	**ftlb**	**Nm**	**Notes**
Front mudguard	4	M5	3.6	5	lub
Left and right air duct	6	M5	1.4	2	
Rearview mirrors on clamp	4	M6	5.9	8	
Air vents on frame and clamp	6	M6	5.9	8	
Front fairing to ducts (on upper part), lower fastener	2	M5	2.9	4	
Front fairing to ducts, lower fastener	2	SWP3.9	0.7	1	
Duct cover fastener	20	SWP3.9	0.7	1	

CONT'D ➤

Lower fairing on frame	4	M5	2.9	4	
Lower fairing to upper fairing	8	M5	1.4	2	
Windshield on front fairing	6	M5	1.4	2	
Upper fairing to front fairing and air ducts	12	M5	2.2	3	
Upper fairing to air duct	6	M5	2.2	3	
Dashboard panel to fairing frame	2	M5	2.2	3	
Dashboard panel to molding	2	SWP3.9	0.7	1	
Mirror frames	4	M5	2.2	3	
Dashboard to mount	4	M6	2.9	4	
Molding on mount	2	M6	2.9	4	
Fairing cap to radiator mount	4	M6	3.6	5	
Fairing cap to air ducts	2	M5	2.2	3	
Lower fairing to fairing cap	6	M5	2.2	3	
Fairing cap to air ducts	2	M5	2.2	3	
Lower steering closing plate to plate	3	M6	3.6	5	
FRAME					
Description	**Qty.**	**Screw / nut**	**ftlb**	**Nm**	**Notes**
Rider footrest mount to frame	4	M8	18	25	
Passenger footrest mount to saddle support	4	M8	18	25	
Saddle support to frame	4	M10	33.2	45	
Tank drift to saddle support	2	M8	man		
Mount to frame	2	M6	7.3	10	
Center stand spring pin	1	M6	7.3	10	
Oil tank mount to frame	2	M6	7.3	10	
Throttle balance line fastener	1	M6	7.3	10	
REAR BODY					
Description	**Qty.**	**Screw / nut**	**ftlb**	**Nm**	**Notes**
License plate holder to mount	2	M5	2.9	4	
Reflector fastening nut	2	M5	2.9	4	
License plate mount holding screw	4	M5	3.6	5	L243
Exhaust heat guard holding screw	2	M5	2.9	4	
License plate lamp holder to license plate mount	2	M5	1.4	2	
License plate lamp to mount	1	M5	2.2	3	
Front panel to saddle support	6	M6	2.9	4	-
Rear saddle support panel	4	M6	2.9	4	
	2	M5	2.2	3	
Bag racks to saddle support	2	M8	10.8	15	
Saddle fastener to saddle support	2	M6	7.3	10	
Grab handle to saddle support	3	M8	7.3	10	
Passenger grab straps to grab handle	4	M8	10.8	15	

CONT'D ➤

RIGHT/LEFT HANDLEBARS AND CONTROLS					
Description	Qty.	Screw / nut	ftlb	Nm	Notes
Anti-vibration weights fastener	2	M6	7.3	10	
Anti-vibration weights ring-nut	2	M18x1.5	28.8	35	
Right/left handlebars fastener to fork	2	M8	21.7	30	lngr.
Right/left handlebars lock screw	2	M6	8.8	12	
Left dimmer switch fastener	2	M5	1.4	2	
Right dimmer switch Fastening	2	M5	1.4	2	
Front brake control fastener	2	M6	7.3	10	
Clutch cylinder fastener	2	M6	7.3	10	
Clutch line fitting to pump and cylinder	2	M10x1	14.5	20	
Gearbox rod to lever and control	2	M6	8.8	12	L243
Gearshift lever to left rider footrest mount	1	M8	10.8	15	L243
Gear shaft control	1	M6	7.3	10	
Pedal on gearbox lever	1	M8	18	25	L270

Notes:
L243 = fastening with LOCTITE® 243
L518 = fasten with LOCTITE® 518
L572 = fasten with LOCTITE® 572
L574 = fasten with LOCTITE® 574
L648 = fasten with LOCTITE® 648
man. = manual fastening
Gr. = grease under tester
lub = lubricate
sil = black silicone (code 8216005)

Fasteners for which no specific torque is given

SCREW	ftlb	Nm
M4	2.2	3
M5	4.4	6
M6	8.8	12
M8	18	25
M10	36	50
M12	59	80

2.41.1 CLEANING AND LUBRICATION

Never use steam, high-pressure water jets and/or highly flammable solvents to wash the chain.

- Wash the chain with diesel fuel or kerosene.

If the chain tends to rust quickly, perform maintenance operations more often.

⚠ WARNING

Never use trichloroethylene, gasoline, or similar fluids: they may be too powerful as solvents for this chain and, more importantly, they may damage the O-rings that retain grease in the gaps between rollers and pins.

NOTES

ENGINE

3

ENGINE

TABLE OF CONTENTS

3.1 TECHNICAL DATA 3-3-00
3.1.1 TECHNICAL SPECIFICATIONS 3-3-00
3.1.2 MAINTENANCE INTERVALS 3-3-00
3.1.3 TROUBLESHOOTING 3-3-00
3.1.4 SEALANTS 3-3-00
3.1.5 LUBRICANTS 3-3-00
3.1.6 SPECIAL TOOLS 3-3-00
3.1.7 TIGHTENING TORQUES 3-3-00
3.1.8 PRECAUTIONS TO OBSERVE WHEN CARRYING OUT MAINTENANCE OPERATIONS AND REPAIRS 3-3-00
3.1.9 GENERAL INFORMATION ABOUT MAINTENANCE AND REPAIRS 3-4-00

3.2 ENGINE COMPONENTS THAT MAY BE DISASSEMBLED WITHOUT REMOVING THE ENGINE FROM THE FRAME 3-4-00
3.2.1 REMOVING THE CLUTCH CYLINDER 3-6-00

3.3 REMOVING THE COMPLETE ENGINE FROM THE FRAME 3-7-00

3.4 INSTALLING THE COMPLETE ENGINE IN THE FRAME 3-16-00

3.1 TECHNICAL DATA

3.1.1 TECHNICAL SPECIFICATIONS
See 1.11 (SPECIFICATIONS).

3.1.2 MAINTENANCE INTERVALS
See 2.1.1 (SCHEDULED MAINTENANCE CHART).

3.1.3 TROUBLESHOOTING
See 8.1 (TROUBLESHOOTING).

3.1.4 SEALANTS
See 1.13 (CONSUMABLES).

3.1.5 LUBRICANTS
See 1.12 (LUBRICANT CHART).

3.1.6 SPECIAL TOOLS
See 1.14 (SPECIAL TOOLS).

3.1.7 TIGHTENING TORQUES
See 2.41 (FASTENERS).

3.1.8 PRECAUTIONS TO OBSERVE WHEN CARRYING OUT MAINTENANCE OPERATIONS AND REPAIRS

⚠ DANGER

During assembly keep in mind the weight (approximately 147.7 lb) and the center of gravity of the engine; support it appropriately.
Be careful around any points that present a hazard for crushing or cutting body parts.

⚠ WARNING

Engine and system maintenance demands technical training and knowledge, both general mechanical knowledge and knowledge specific to this engine, as well as familiarity with certain common and special tools used in disassembly, repair, reassembly and maintenance. Do not attempt any maintenance operations for which you have not been specifically trained. Failure to observe this warning can lead to serious bodily injury, especially to your hands and fingers. Always follow the instructions provided by the vehicle manufacturer.

NOTE Follow the instructions provided by the vehicle manufacturer.

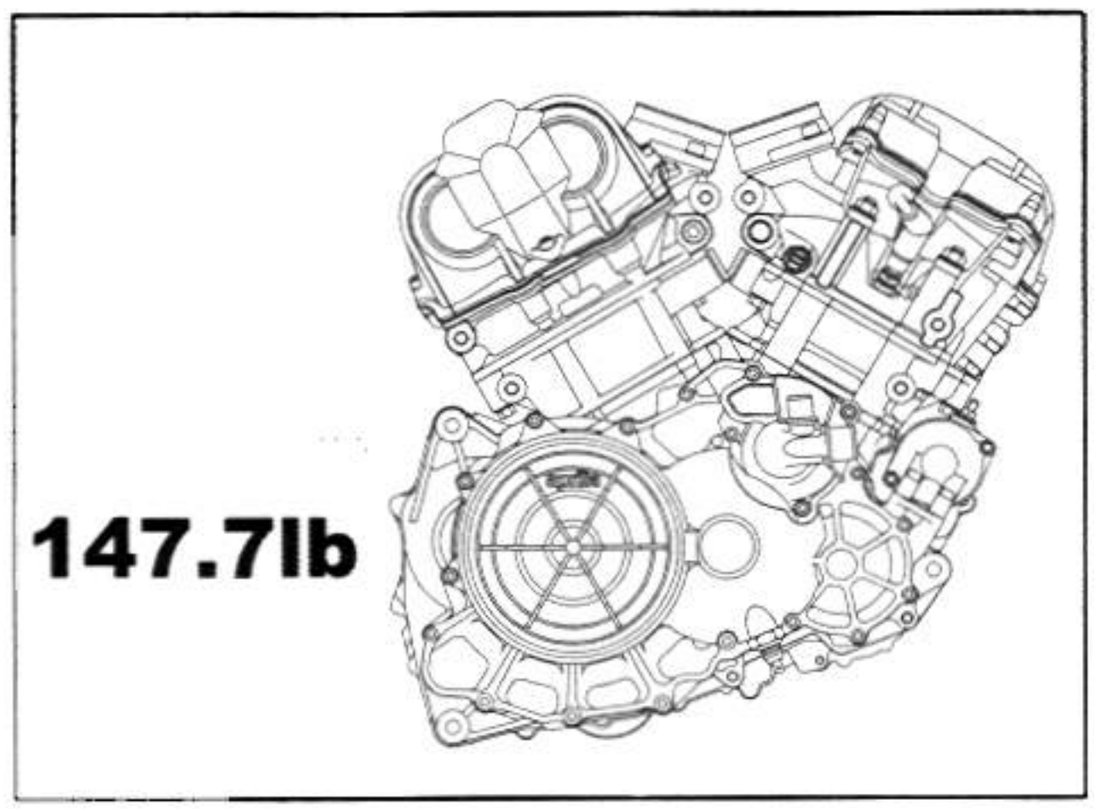

3.1.9 GENERAL INFORMATION ABOUT MAINTENANCE AND REPAIRS

Carefully read 0.5.1 (PRECAUTIONS AND GENERAL INFORMATION).

3.2 ENGINE COMPONENTS THAT MAY BE DISASSEMBLED WITHOUT REMOVING THE ENGINE FROM THE FRAME

Carefully read 1.3.9 (PRECAUTIONS AND GENERAL INFORMATION).

The parts listed below may be removed and reinstalled without removing the engine from the frame.

⚠ WARNING

This chapter lists the procedures progressively and in sequential order.

Use common sense to interpret any overlap in cross-referenced instructions, to avoid unnecessarily removing components.

Perform only those operations needed to remove the component in question.

TOP

- Tappet cover (1), see 0.4.1 (ENGINE SERVICE MANUAL).
- Tappet cover (2), head, cylinder and rear piston, see 0.4.1 (ENGINE SERVICE MANUAL).
- Front (3) and rear (4) intake cylinder manifolds.
- Camshaft position sensor and camshafts, see 0.4.1 (ENGINE SERVICE MANUAL).
- Chain, chain tightener and front and rear cylinder timing drive assembly, see 0.4.1 (ENGINE SERVICE MANUAL).
- Valves, see 0.4.1 (ENGINE SERVICE MANUAL).

FRONT

- Front cylinder exhaust pipe, see 7.1.53 (REMOVING THE EXHAUST MANIFOLDS).
- Starter motor (5), see 0.4.1 (ENGINE SERVICE MANUAL).

REAR

- Exhaust pipe removal, see 7.1.53 (REMOVING THE EXHAUST MANIFOLDS).

LEFT

- Rear cylinder spark plugs (6-7), see 2.7 (SPARK PLUGS).
- Countershaft sprocket guard (8), see 2.35.4 (INSPECTING THE DRIVE CHAIN GUIDE PLATE).
- Gearshift lever, see 7.1.48 (COMPLETELY REMOVING THE GEARSHIFT LEVER).
- Rear cylinder coolant thermistor (9), see 5.4 (REMOVING THE COOLANT THERMISTORS.).
- Engine oil filter (10), see 2.13 (CHANGING THE ENGINE OIL AND OIL FILTER).
- Neutral gear switch (11).
- Clutch cylinder (12), see 3.2.1 (REMOVING THE CLUTCH CYLINDER).
- Flywheel cover (13) and ignition system, see 0.4.1 (ENGINE SERVICE MANUAL).
- Engine oil tank (14), see 7.1.55 (REMOVING THE ENGINE OIL TANK).

RIGHT

- Front cylinder coolant thermistor (15), see 5.4 (REMOVING THE COOLANT THERMISTORS.).
- Front cylinder spark plugs (16-17), see 2.7 (SPARK PLUGS).
- Coolant pump (18), see 0.4.1 (ENGINE SERVICE MANUAL).
- Engine oil pressure sensor (19).
- Clutch cover (20) and clutch assembly, see 0.4.1 (ENGINE SERVICE MANUAL).

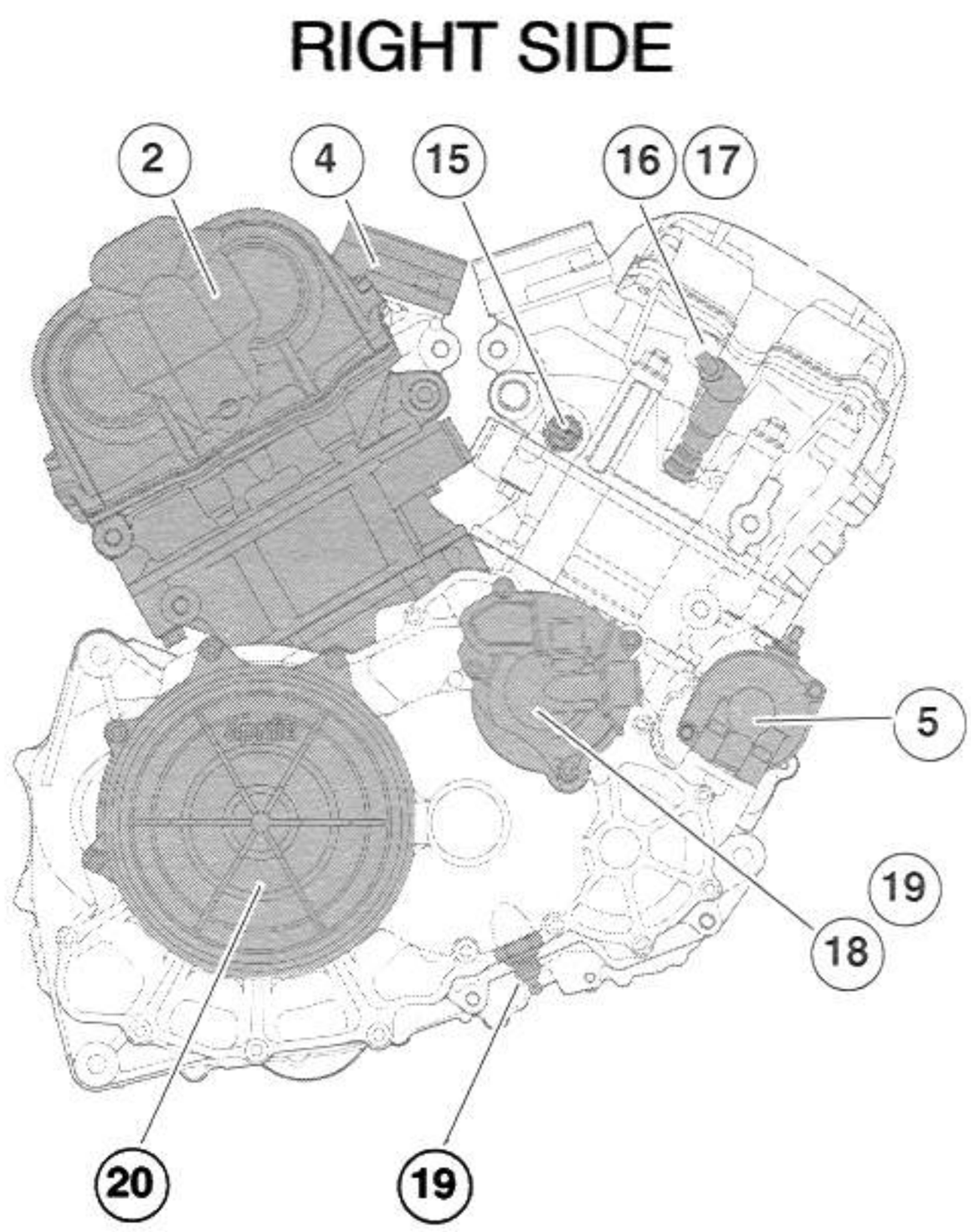

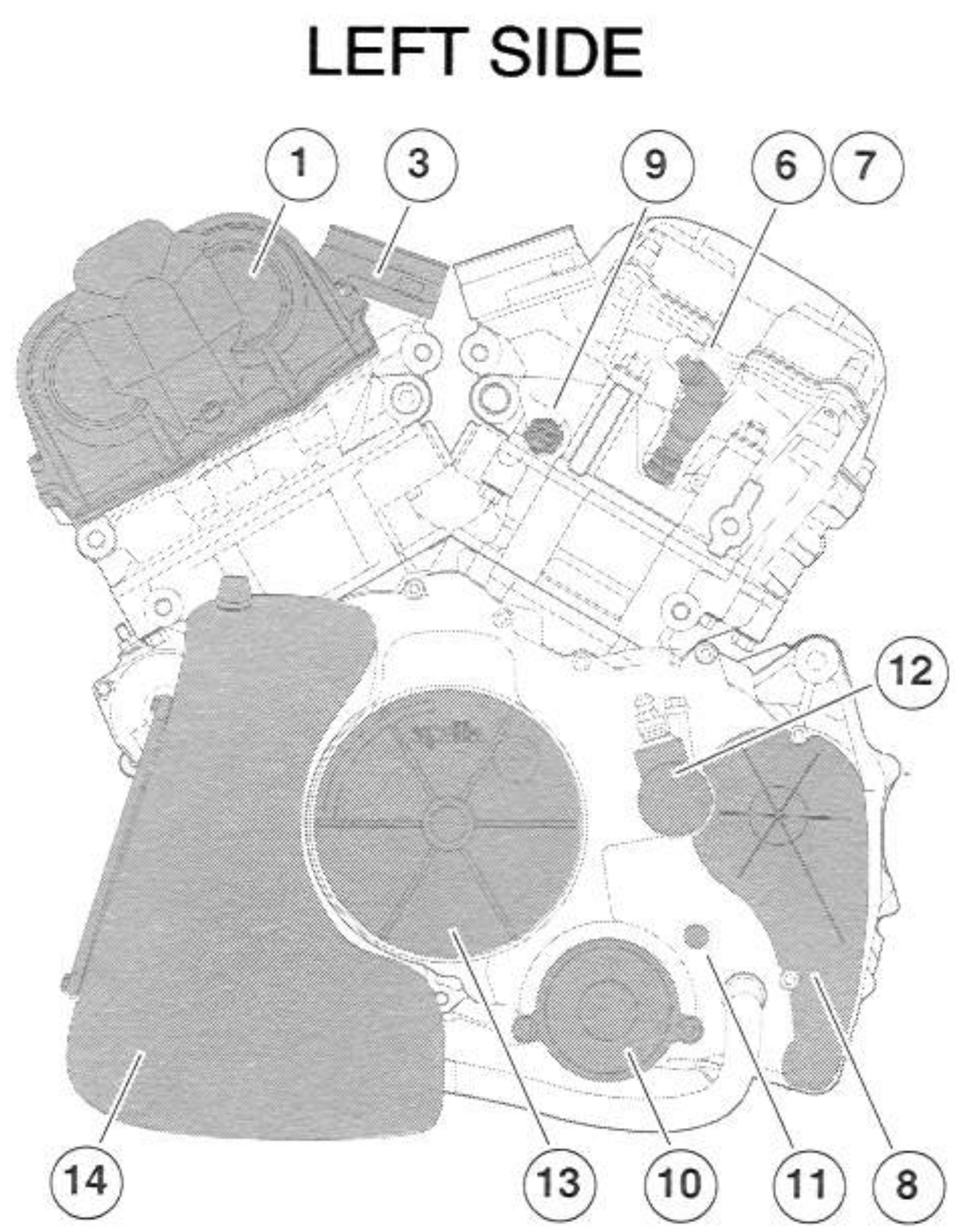

3.2.1 REMOVING THE CLUTCH CYLINDER

Carefully read 1.3.9 (PRECAUTIONS AND GENERAL INFORMATION) and 1.4.5 (CLUTCH CONTROL FLUID).

- Remove the left fairing, see 7.1.28 (REMOVING THE SIDE FAIRINGS).
- Remove the voltage regulator housing, see 2.35.4 (INSPECTING THE DRIVE CHAIN GUIDE PLATE).
- Unscrew and remove the screws (3).

Tightening torque for screws (3): 8.8 ftlb (12 Nm).

- Remove the cylinder (2).

⚠ WARNING

Take great care when removing the clutch cylinder, the line remains attached. Do not touch the clutch lever after the cylinder (2) has been removed. This could cause the piston to fall from its bore and clutch fluid would be spilled out.
To prevent this from happening, use a tie-wrap to secure the piston in place.
Remove the flange (1) only if necessary.

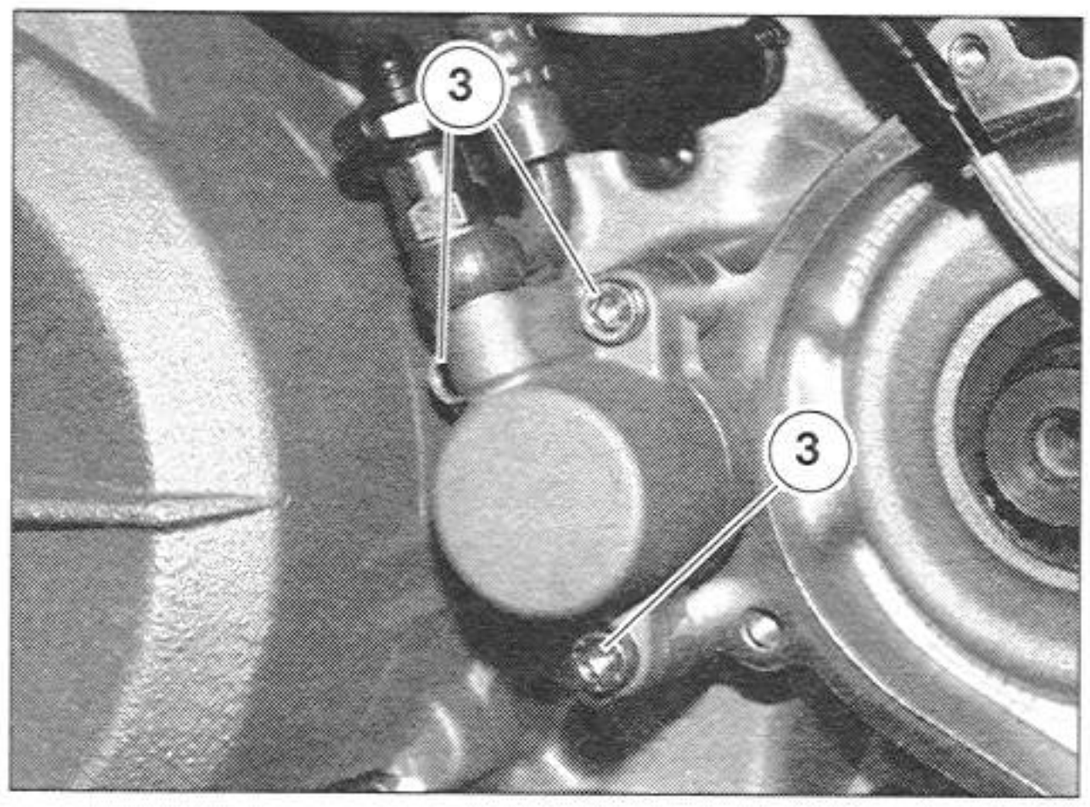

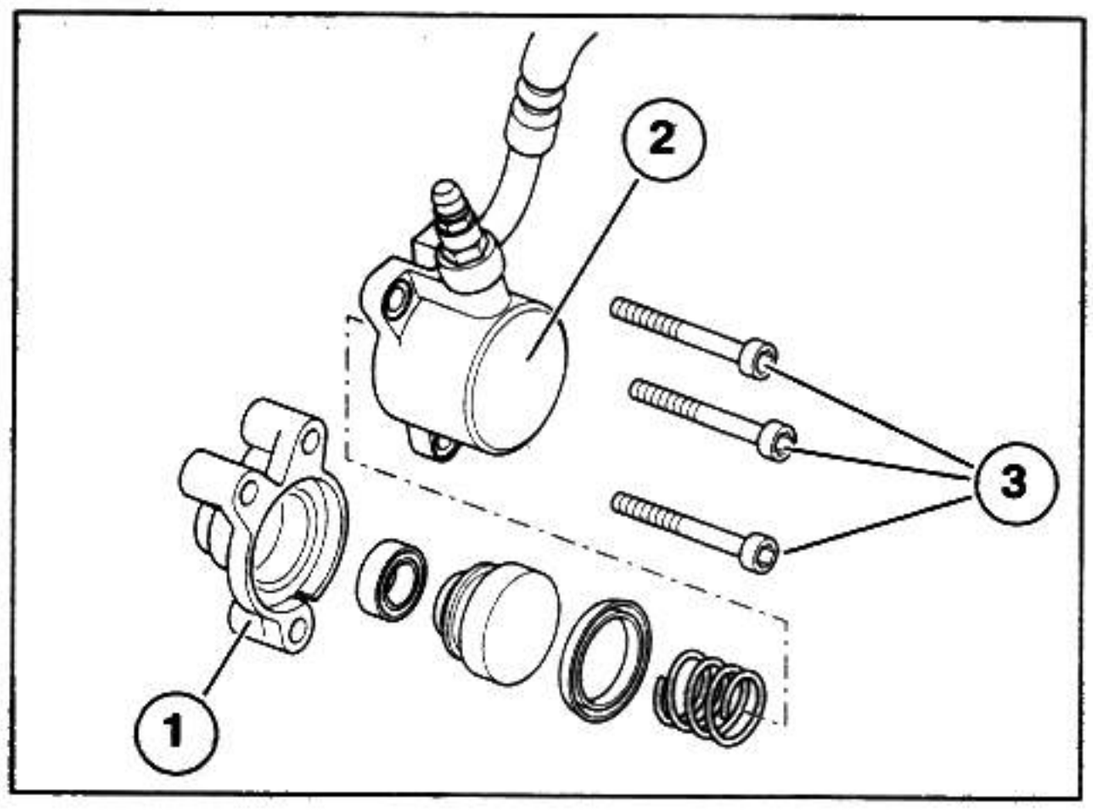

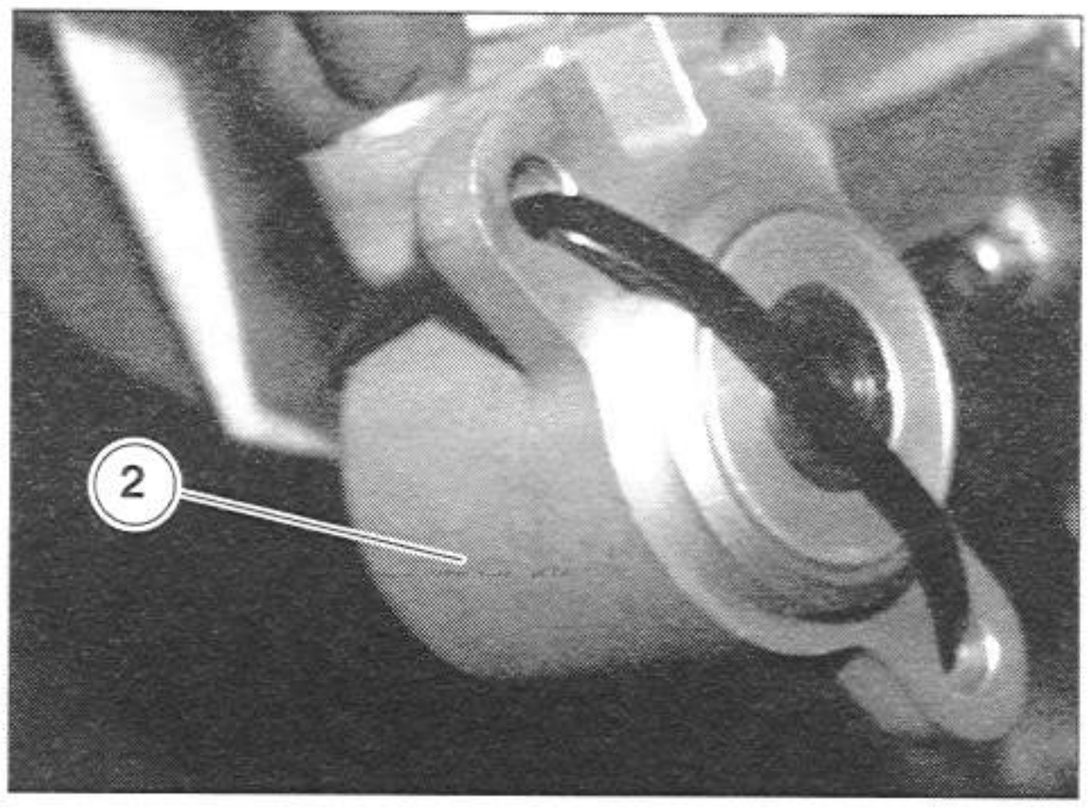

3.3 REMOVING THE COMPLETE ENGINE FROM THE FRAME

⚠ WARNING

The engine must be removed ONLY at an Authorized Service Center or by an Aprilia dealer.

Carefully read 1.3.9 (PRECAUTIONS AND GENERAL INFORMATION).

⚠ WARNING

Engine removal is a particularly complex operation. Therefore, inspect the vehicle carefully before proceeding.

This chapter lists the procedures progressively and in sequential order.
Use common sense to interpret any overlap in cross-referenced instructions, to avoid unnecessarily removing components. Perform only those operations needed to remove the component in question.

Before you proceed with the operations described below, bear in mind that the engine must be removed from the frame from underneath; the equipment for the job must therefore be gathered and set in place beforehand.

Engine dry weight ~ 147.7 lb (~ 67 kg).

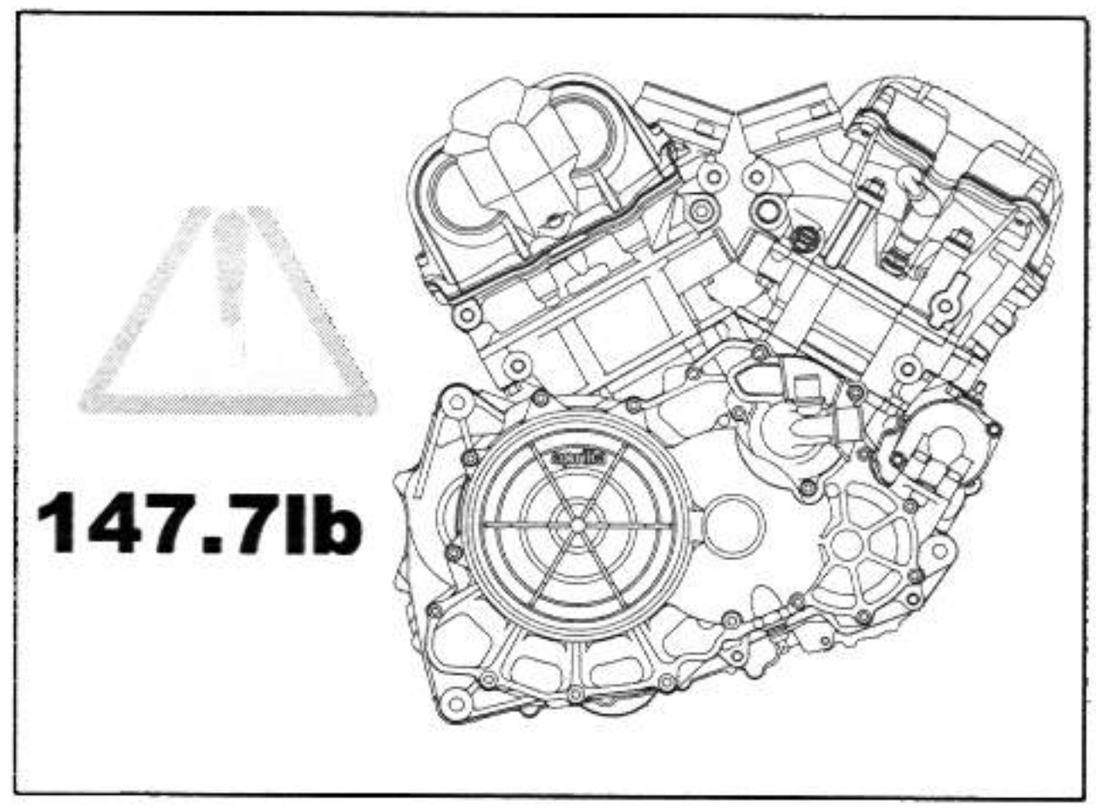

- Set the ignition switch to "⊗".
- Place the vehicle on the stand.
- Disconnect the negative cable (-) and positive cable (+) of the battery, in that order.

⚠ WARNING

When reassembling, first connect the positive cable (+), then the negative cable (–).

- Remove the fuel tank, see 7.1.6 (REMOVING THE FUEL TANK COMPLETELY).
- Remove both side fairings, see 7.1.28 (REMOVING THE SIDE FAIRINGS).
- Remove both lower fairings, see 7.1.33 (REMOVING THE LOWER FAIRING).
- Remove the radiator spoiler, see 7.1.35 (REMOVING THE RADIATOR SPOILER).

⚠ WARNING

Mark the cables to avoid mix-ups when reassembling.

- Disconnect the following electrical connectors in the order listed:
  - alternator (1);
  - crankshaft position sensor (2);
  - front cylinder coolant thermistor (3);
  - rear cylinder coolant thermistor (4).

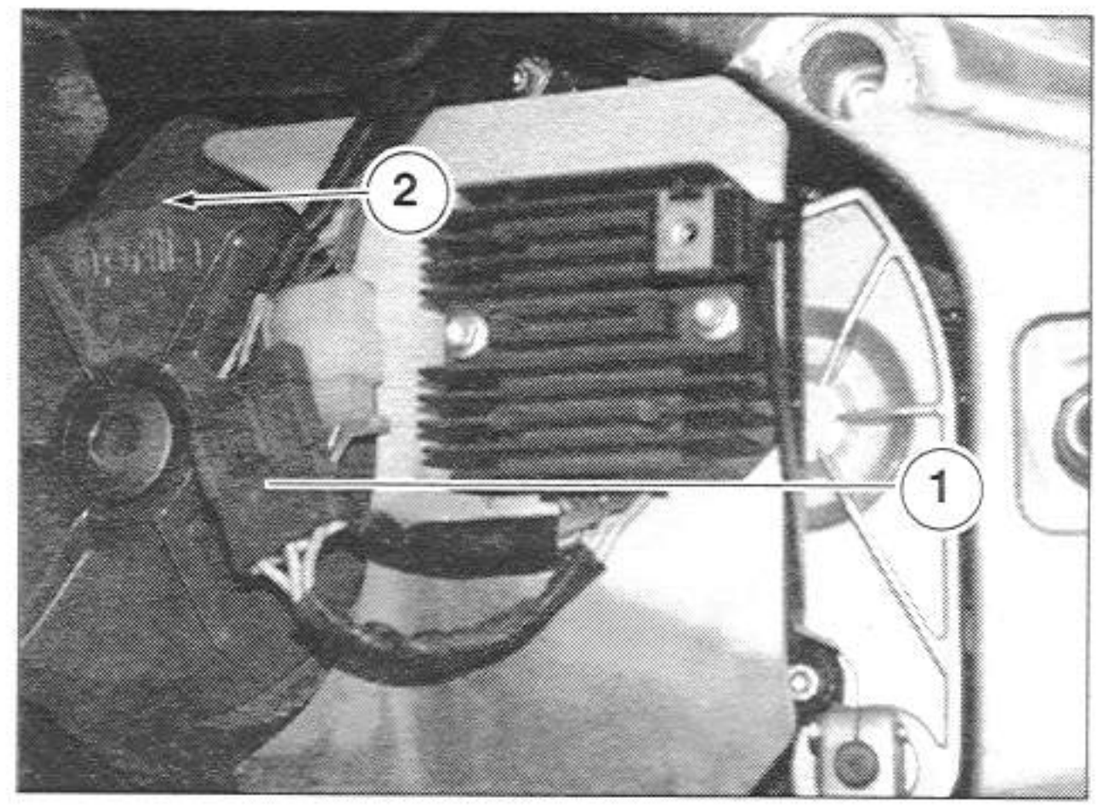

⚠ WARNING

When reassembling, make sure electrical connectors are properly fitted.

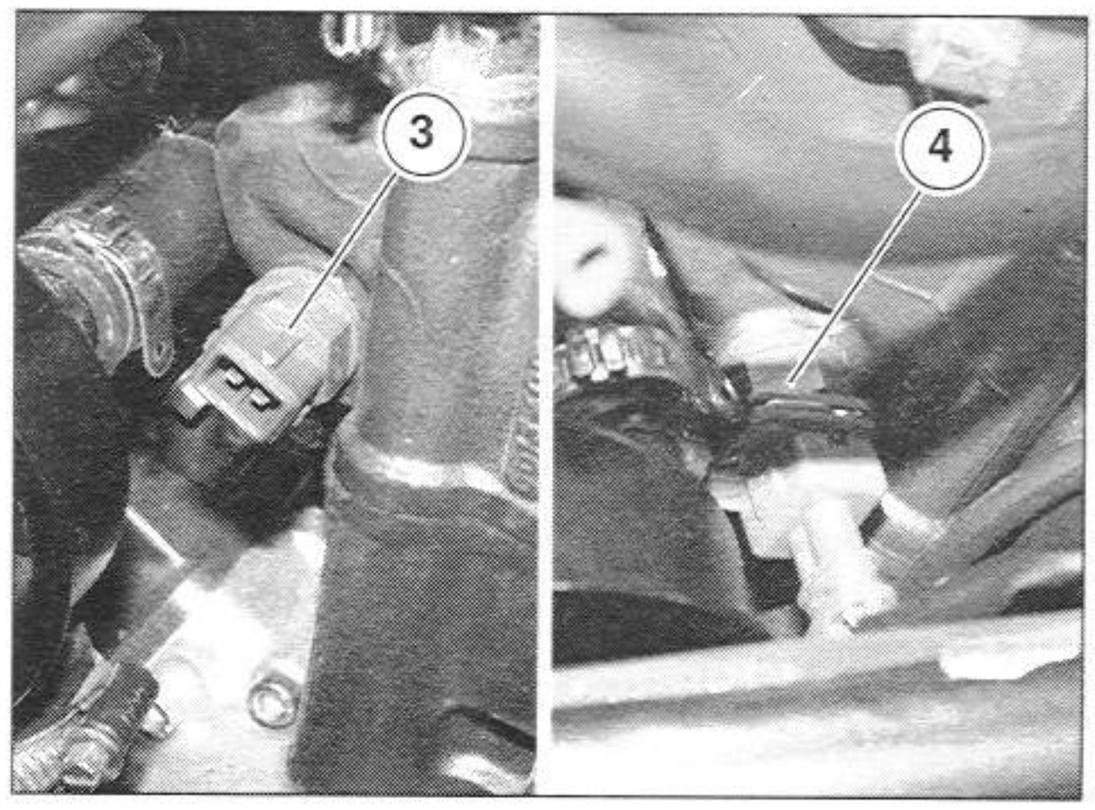

- Unscrew and remove the screw (5) and disconnect the cable from the neutral gear switch (6).
- Disconnect the cable from the engine oil pressure sensor (7).

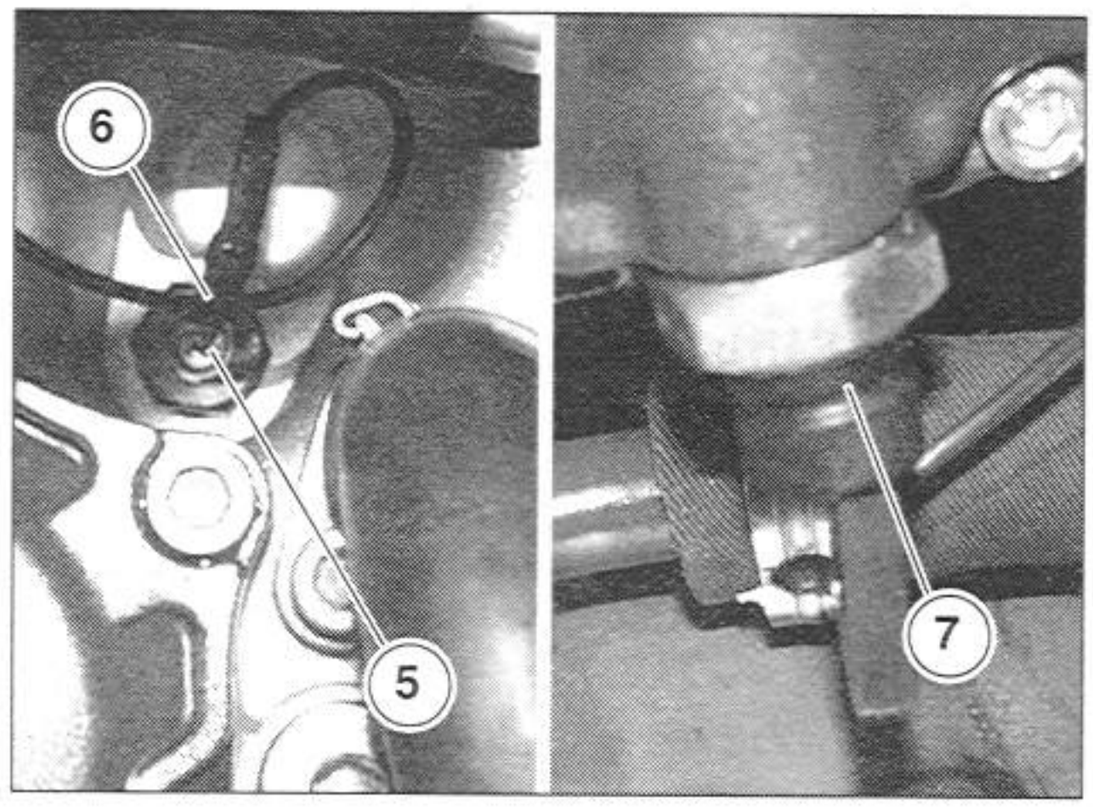

⚠ WARNING

The brake fluid reservoir (9) must remain upright to prevent any leakage.

- Remove the clutch cylinder, see 3.2.1 (REMOVING THE CLUTCH CYLINDER).
- Remove the countershaft sprocket, see 7.1.57 (REMOVING THE DRIVE CHAIN SHOE).
- Remove the expansion tank, see 5.8 (REMOVING THE EXPANSION TANK).

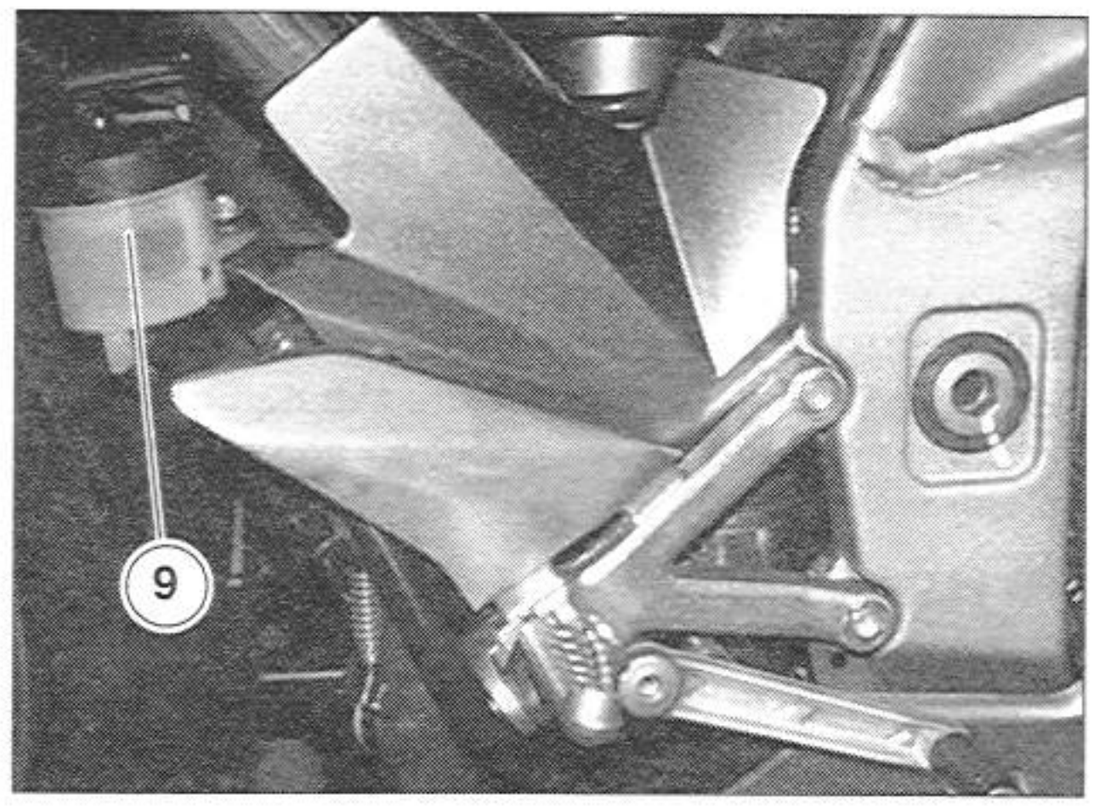

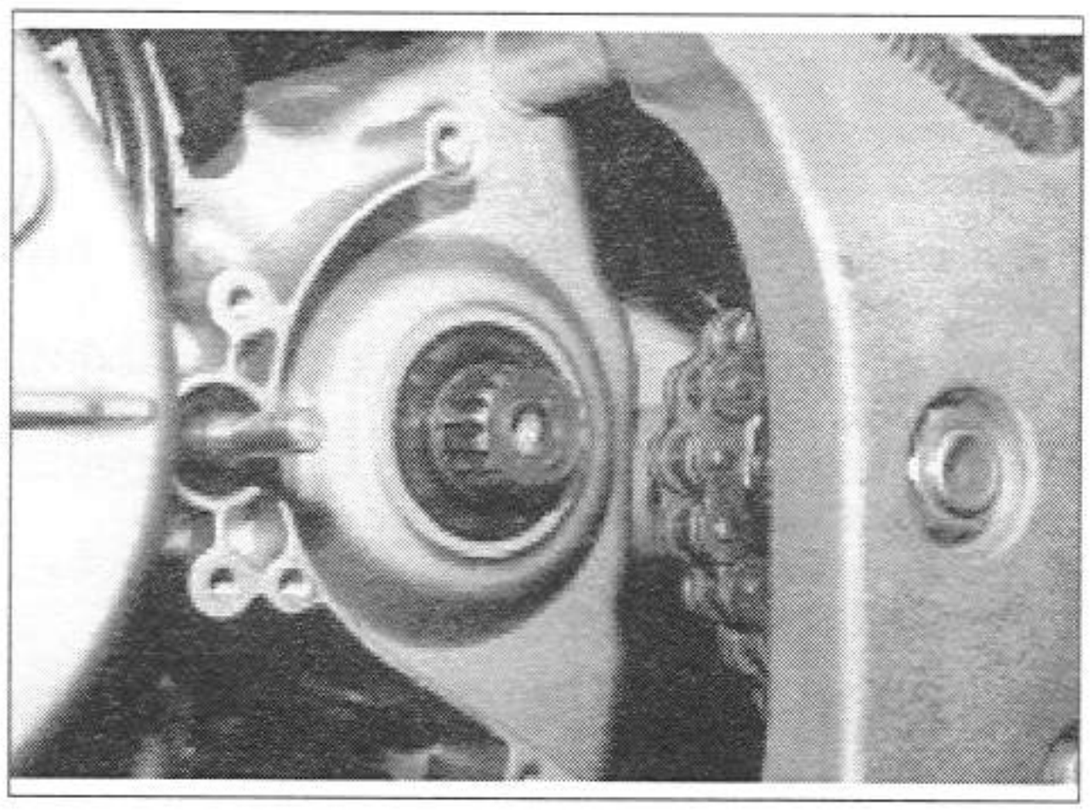

- ★ Disconnect the spark plug caps (10).

⚠ WARNING

Use a non-flammable solvent, brushes and rags to clean the exterior of the engine.
Avoid damaging rubber and plastic parts with corrosive or flammable cleansers and solvents.
Should it be necessary to use a steam cleaner, do not aim the high-pressure jets of water, steam or air at the following parts: wheel hubs, controls on the right and left handlebars, front and rear brake master cylinder, instruments and gauges, muffler outlets, glove compartment, ignition switch/steering lock, electrical components.

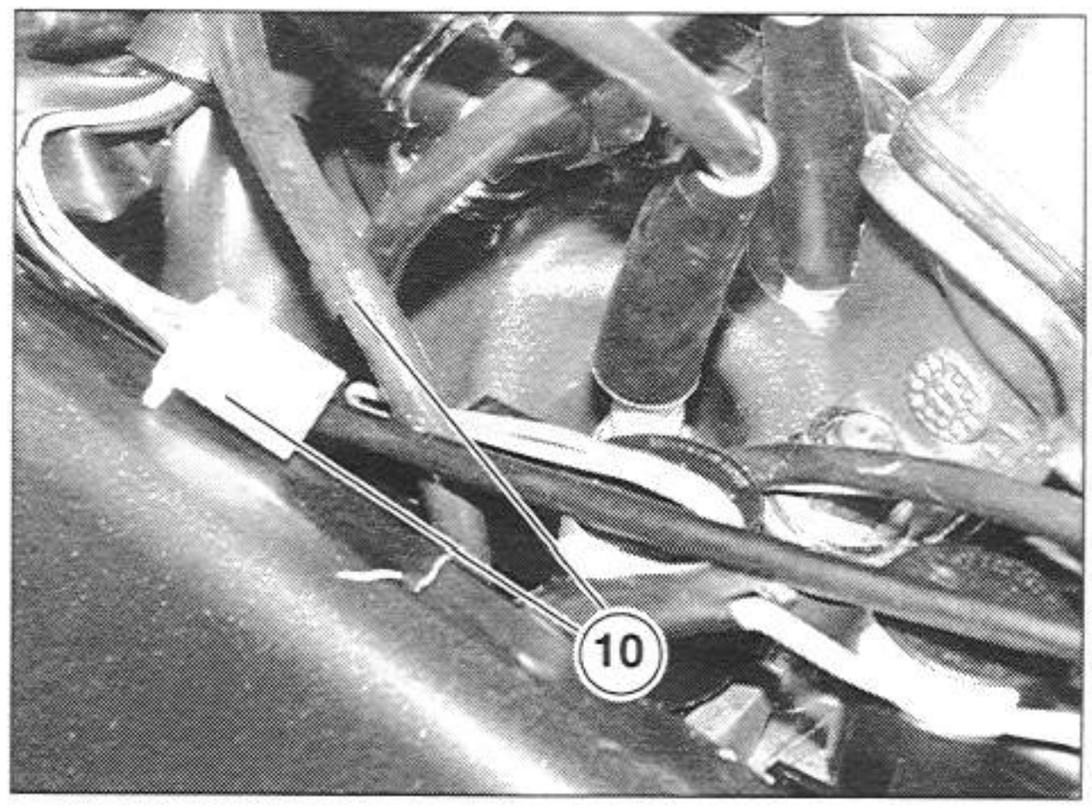

- Clean the outside of the engine thoroughly.
- Remove the exhaust pipes, see 7.1.53 (REMOVING THE EXHAUST MANIFOLDS).
- ★Disconnect the electrical connector (11) from the electric fan.
- Disconnect the electrical cables from the horn.

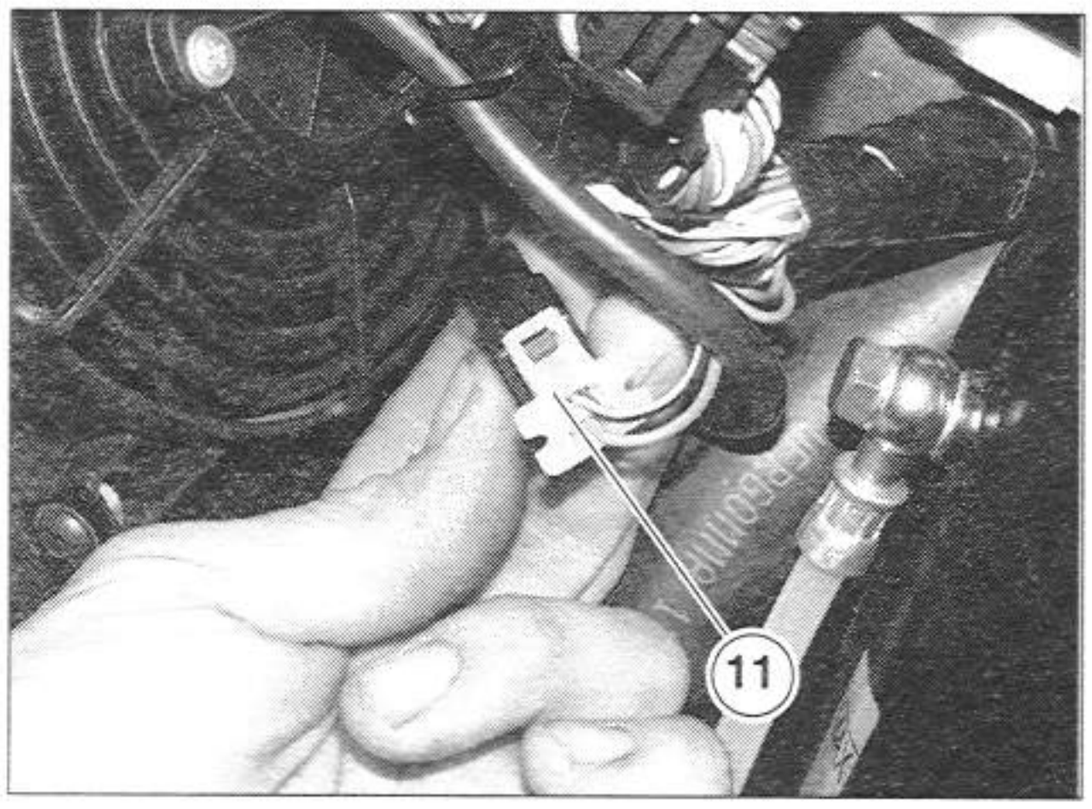

⚠ WARNING

When reassembling, make sure electrical connectors are properly fitted.

⚠ WARNING

Mark both the coupling and lines to avoid mix-ups when reassembling.

- Remove the engine oil tank (12), see 7.1.55 (REMOVING THE ENGINE OIL TANK), along with the engine oil radiator (13), see 7.1.56 (REMOVING THE ENGINE OIL RADIATOR), disconnecting the lines joining it to the engine (14-15).

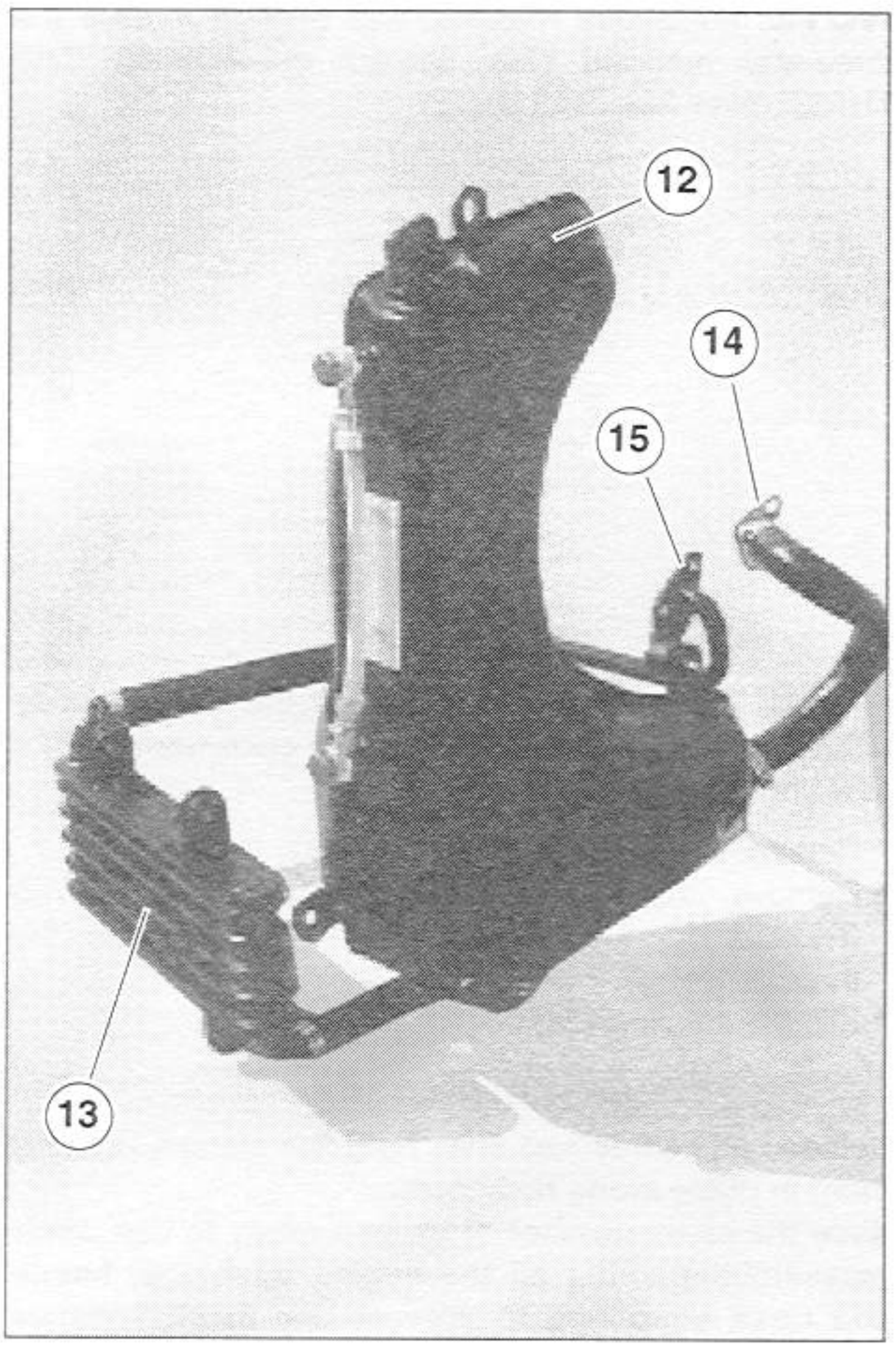

- Remove both radiators (16-17) while still connected, see 5.2 (REMOVING THE RADIATORS), complete with electric fans, horn and supports.

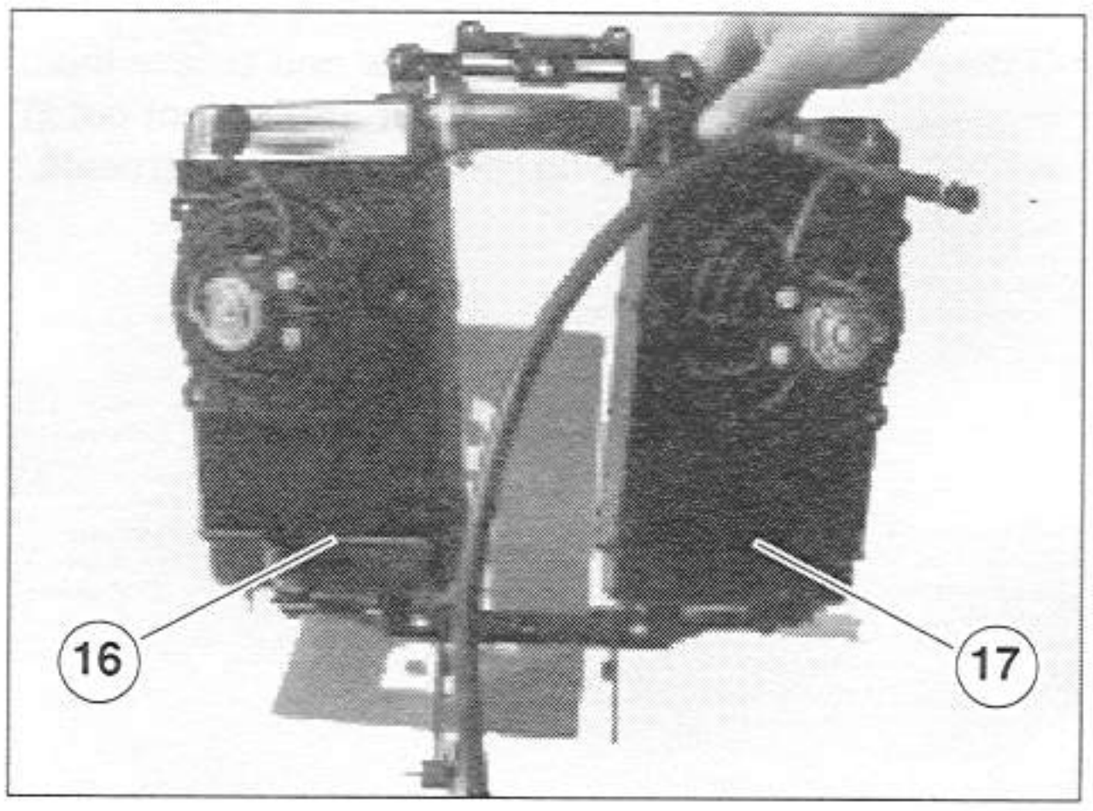

- Remove the complete throttle body (18), see 4.8 (THROTTLE BODY).

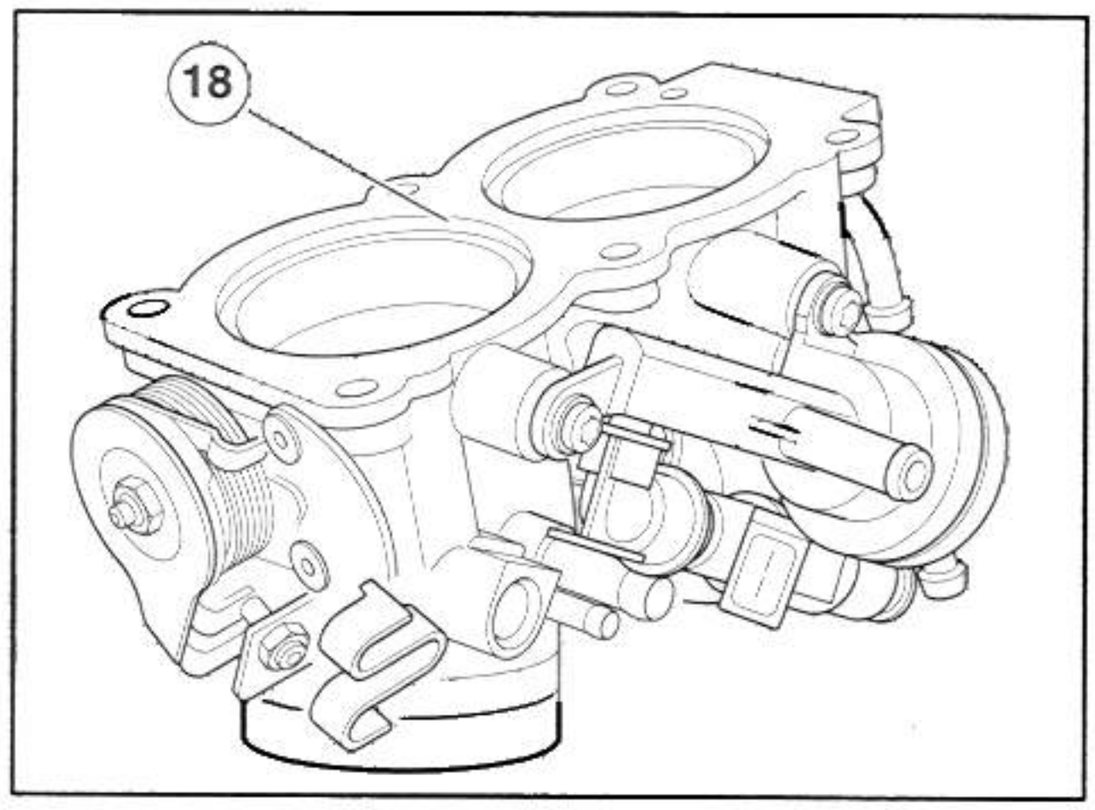

NOTE For space reasons, it is best to remove the three-way manifold (19), see 5.7 (REMOVING THE THREE-WAY MANIFOLD).

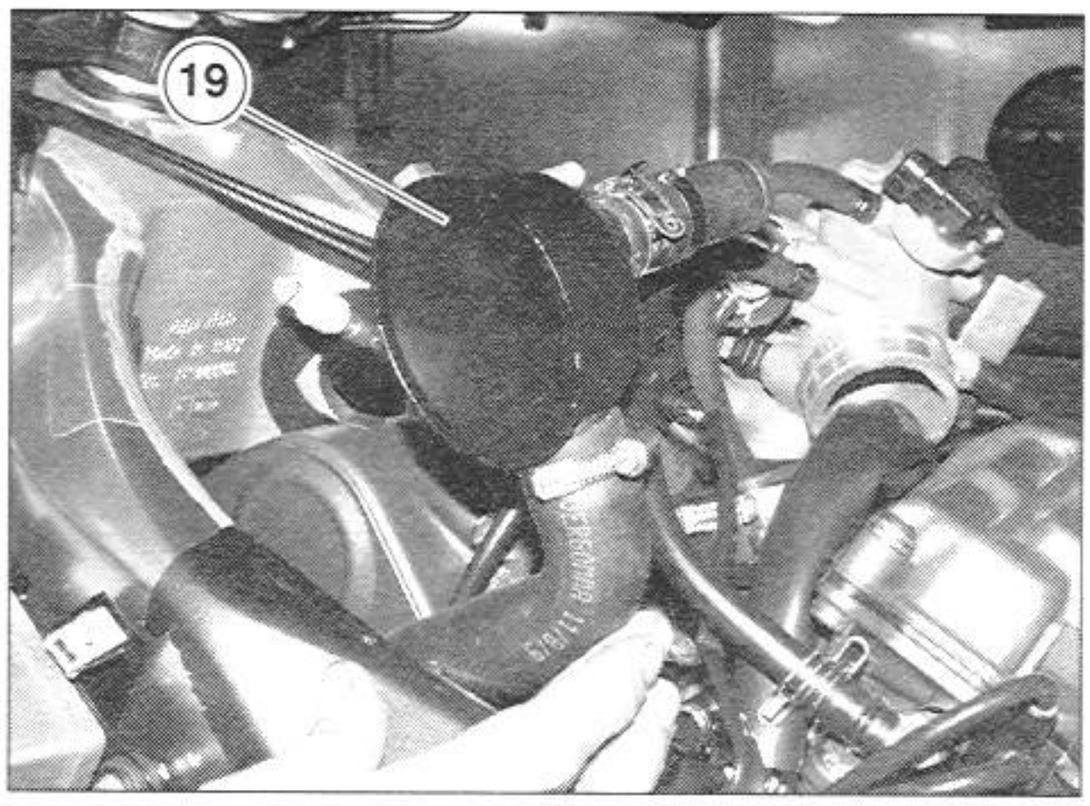

NOTE Use special pliers to hook the clamps (code 0277295); during reassembly, replace each clamp with a new one of the same kind.

- Release the click clamp (20 - 21 -22).
- Remove the complete thermostat (23), see 5.5 (REMOVING THE THERMOSTAT) along with the three couplings.
- Slip the coupling (24) off the coolant pump.

⚠ WARNING

Release all cables and lines from the clamps holding them in place along their path.
Have the same number of clamps ready to use when reassembling. Plug all the engine openings, hoses and hose couplings to prevent any foreign matter from accidentally entering the engine.

- Gather the electrical cables together and secure them in place with adhesive tape so that they do not get in the way of the engine being lifted out from underneath.

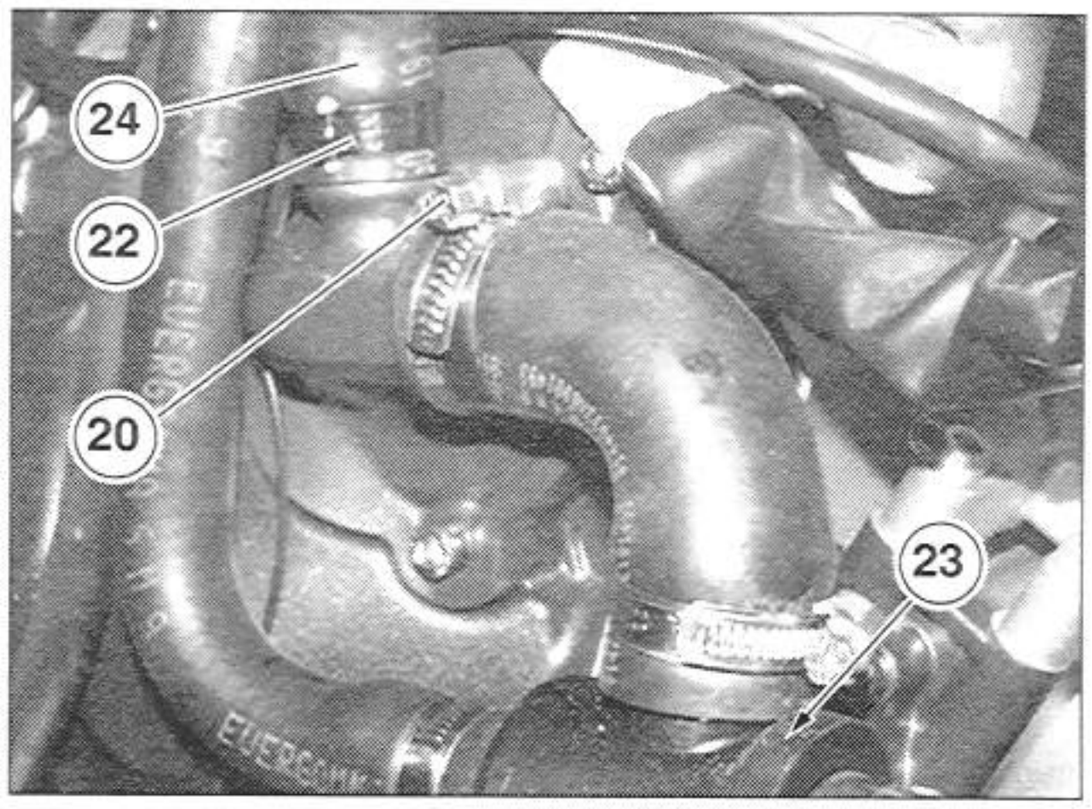

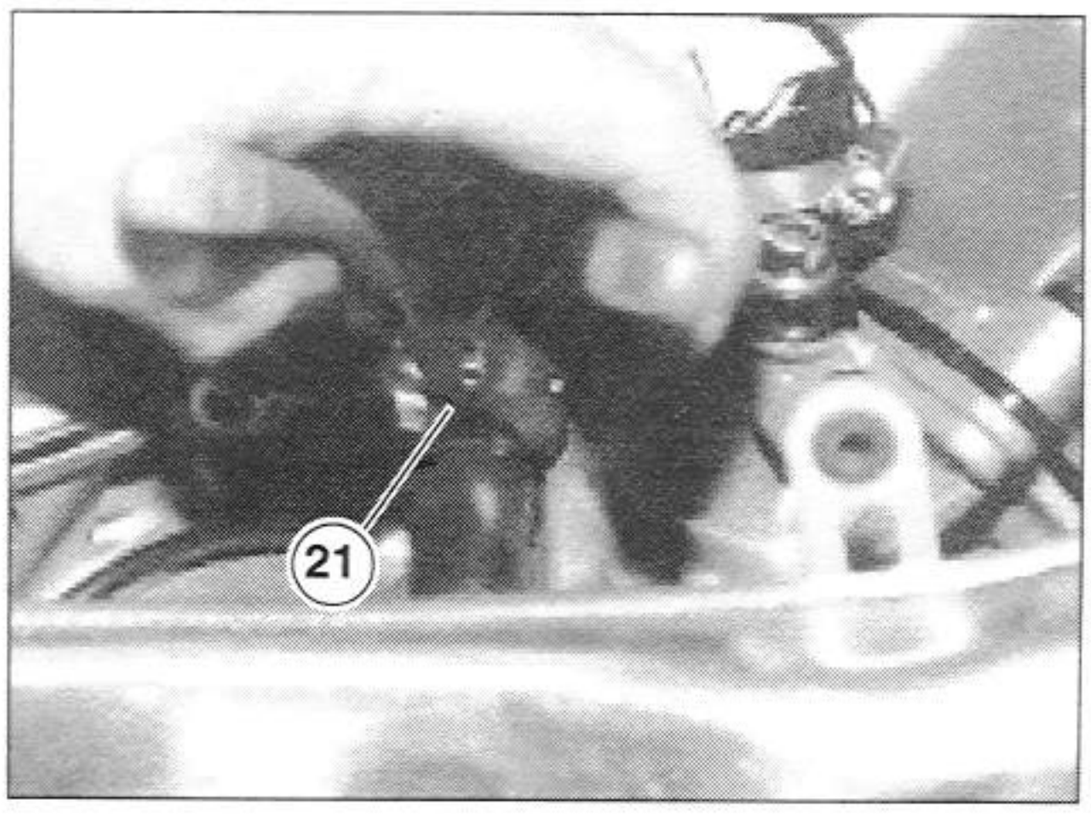

- Unscrew and remove the screws (25), saving the plate (26).

Tightening torque for screws (25): 29 ftlb (40 Nm).

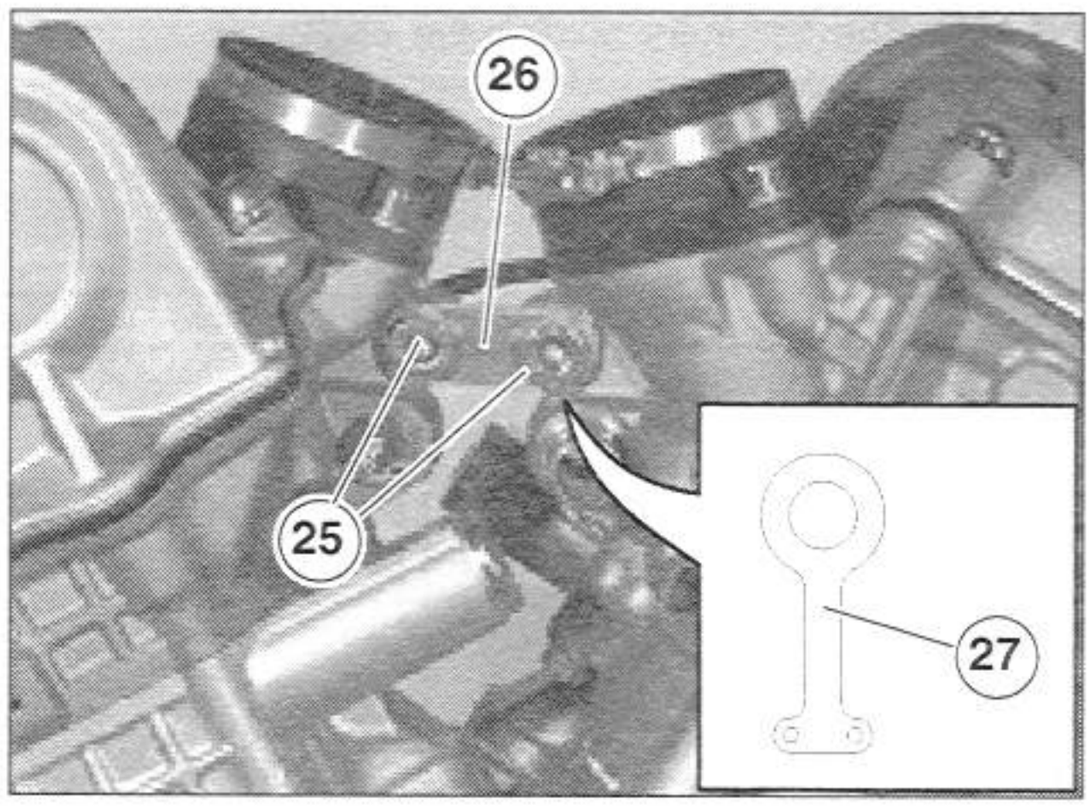

NOTE Have on hand the special tool OPT code 8140183 (engine lifting eye hook), a hoist (28) and lifting slings (29).

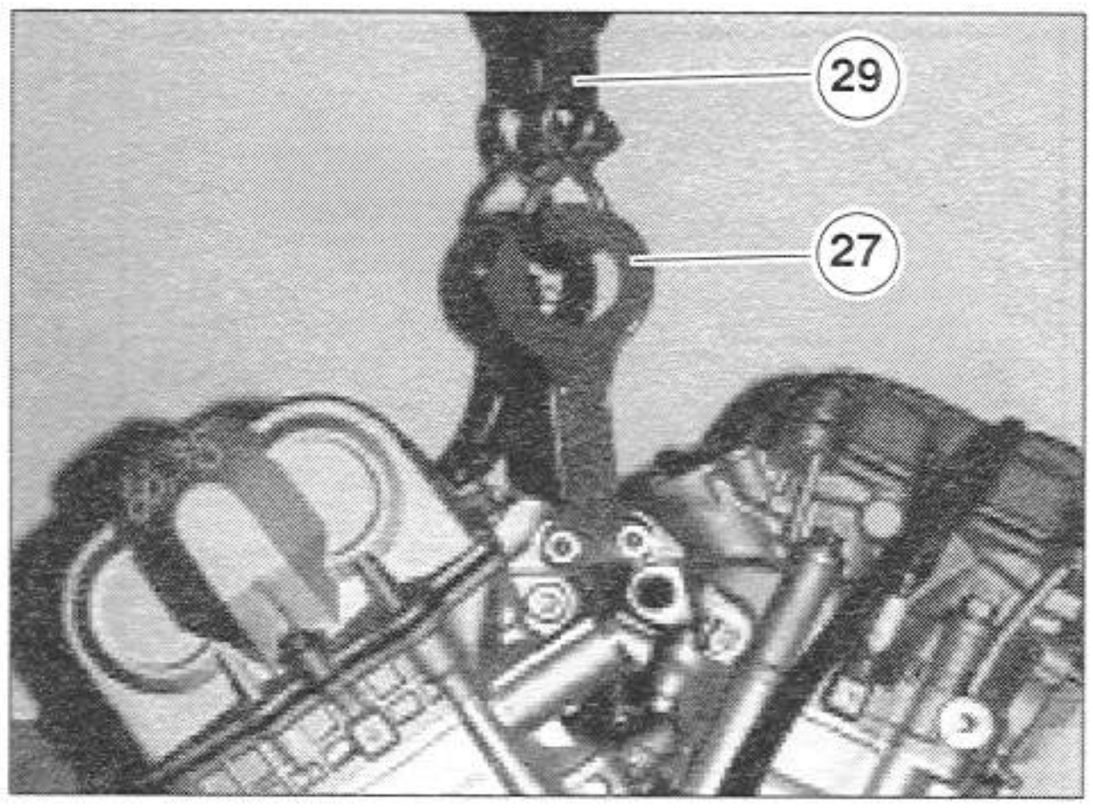

⚠ DANGER

The lifting hoist (28) and slings (29) must be capable of safely bearing the weight of the engine, which weighs approximately 65 kg. Failure to observe this warning can allow the engine and/or the motorcycle to fall, with potential serious personal injury to the mechanic. Use only appropriately rated lifting equipment, in perfect condition. If the lifting equipment is unstable, the motorcycle could fall over, causing serious personal injury. Use only equipment that is completely stable.

- Install the special eye hook (27) (code 8140183) to lift the engine and fasten it in place with the screws (25).
- Hook the slings (29) to the hoist (28) and eye hook (27) as shown in the figure.
- Raise the hoist arm (28) until the slings (29) are stretched taut.

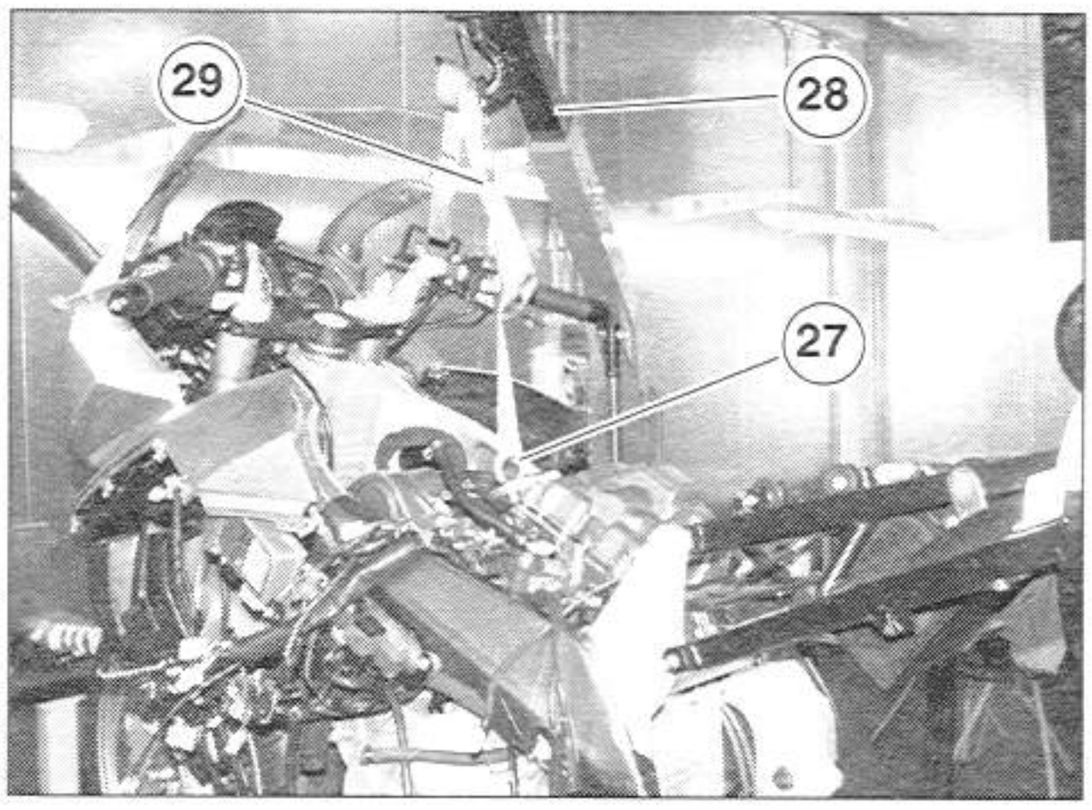

⚠ WARNING

Raise the hoist arm (28) only enough to keep the engine in position while removing the fasteners holding it to the frame.

NOTE The fasteners holding the engine to the frame must be removed in the order given:

LEFT SIDE A → B → C → D.
RIGHT SIDE E → F → G → H.

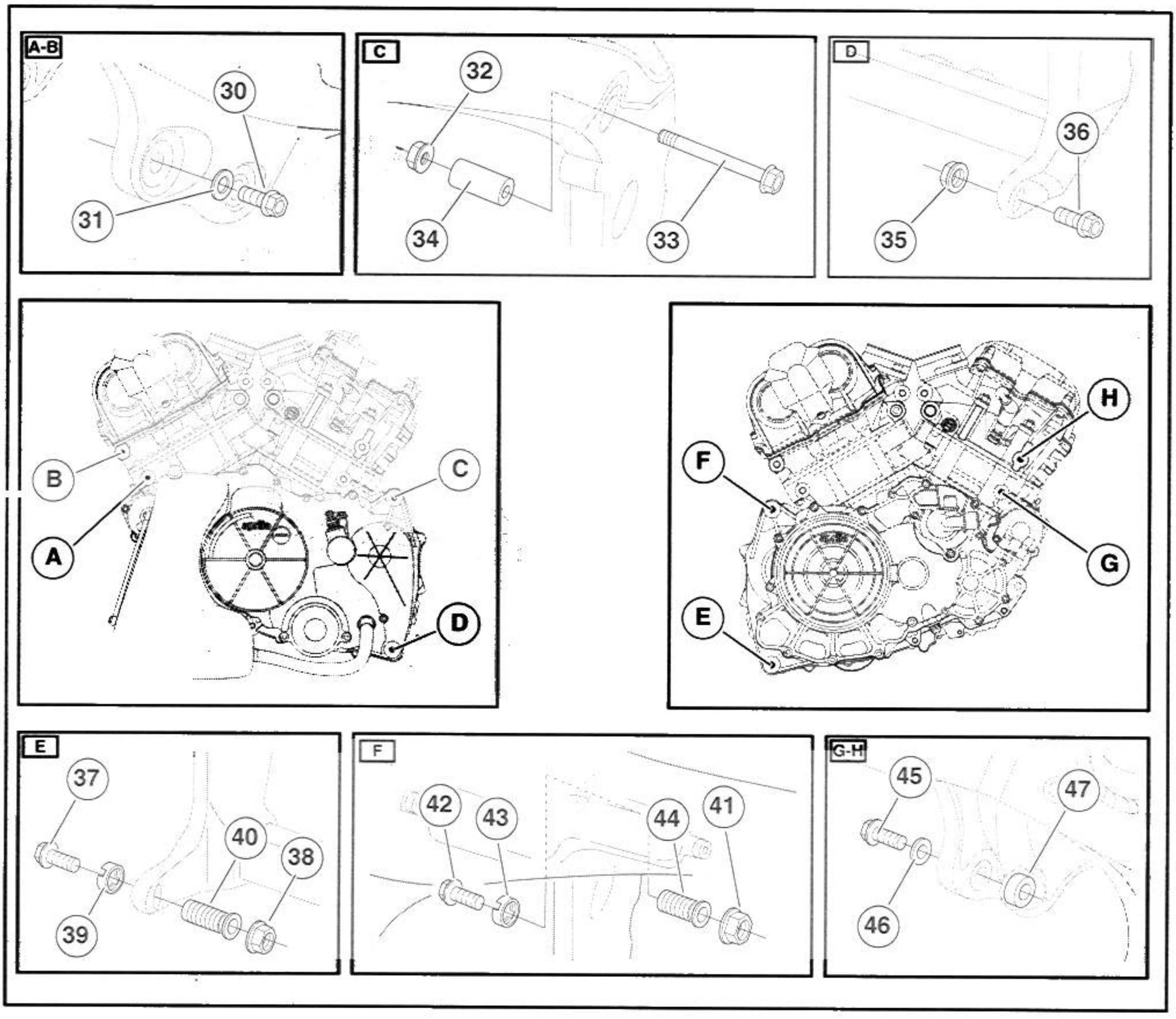

- Unscrew and remove the two bolts (30), retrieving the corresponding washers (31).

Tightening torque for bolts (30): 29 ftlb (40 Nm).

- Hold the nut (32) in place while you unscrew and remove the bolt (33).

Tightening torque for nut (32) and bolt (33): 36 ftlb (50 Nm).

- Retrieve the spacer (34).
- Hold the nut (35) in place while you unscrew and remove the bolt (36).

Tightening torque for nut (35) and bolt (36): 36 ftlb (50 Nm).

- Hold the nut (38) in place while you unscrew and remove the bolt (37).

Tightening torque for nut (38) and bolt (37): 36 ftlb (50 Nm).

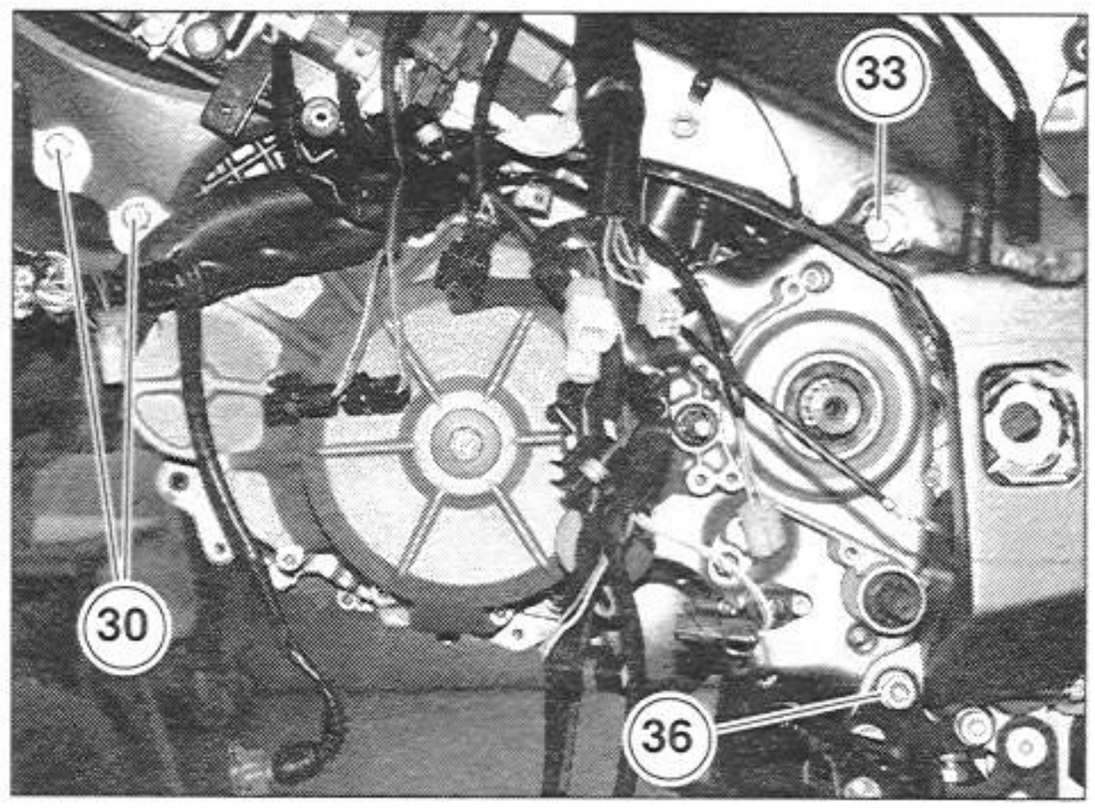

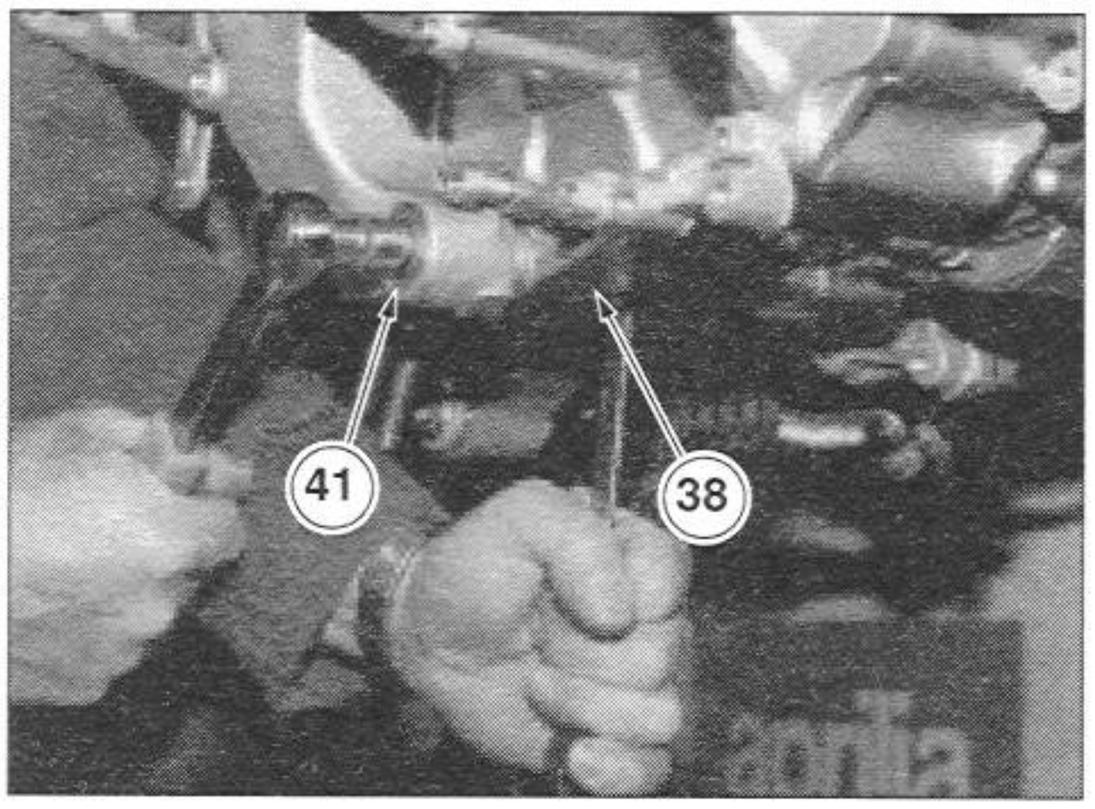

- Hold the nut (41) in place while you unscrew and remove the bolt (42).

Tightening torque for nut (41) and bolt (42): 36 ftlb (50 Nm).

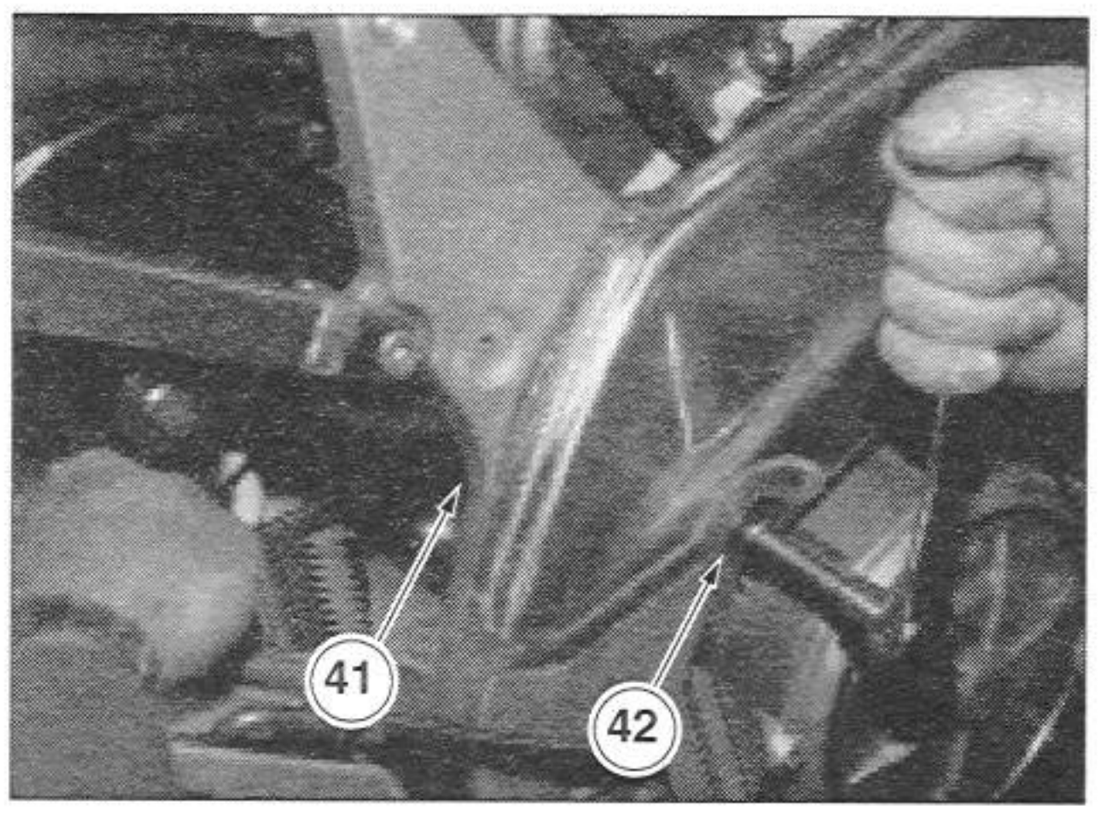

- Use the special socket wrench (48) (code 8140203) to loosen and remove the lock nuts (43 - 39).

Tightening torque for lock nuts (43 -39): 36 ftlb (50 Nm).

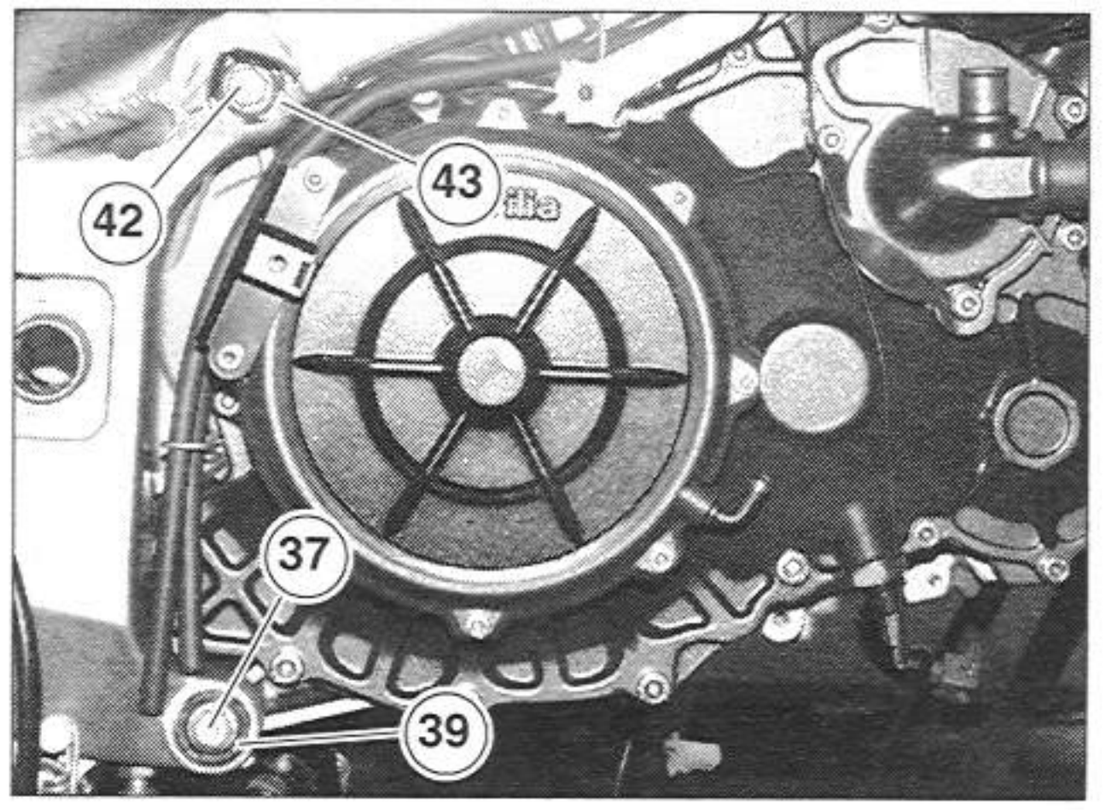

- Unscrew the adjuster bushings (40 - 44) and slide them up against the frame.

Tightening torque for adjustment bushings (40 - 44): 7.3 ftlb (10 Nm).

WARNING

During reassembly screw the adjustment bushings (40 - 44) in by hand, and slide them up against the engine; torque them to specifications.

- Hold the nut (38) in place while you unscrew and remove the bolt (37).
- Hold the nut (41) in place while you unscrew and remove the bolt (42).
- Make sure the slings (29) are stretched taut.
- Unscrew and remove the two bolts (45), saving the washers (46).

Tightening torque for bolts (45): 29 ftlb (40 Nm).

- Recover the two spacers (47).

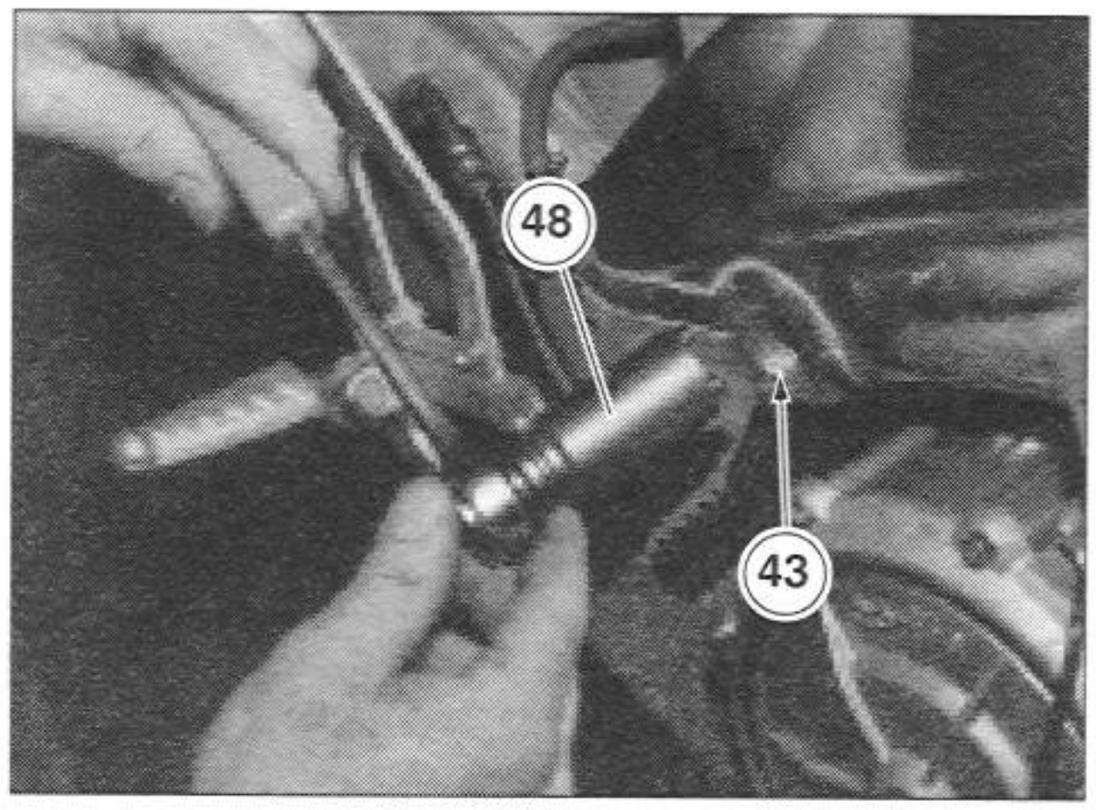

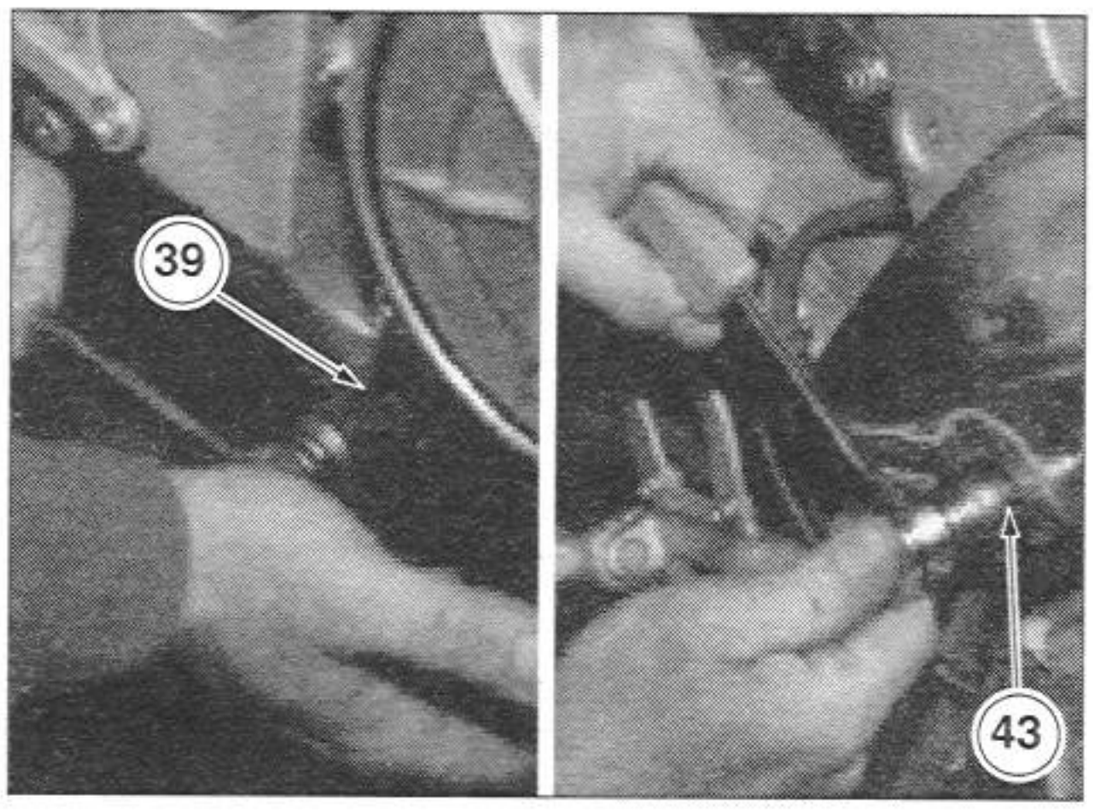

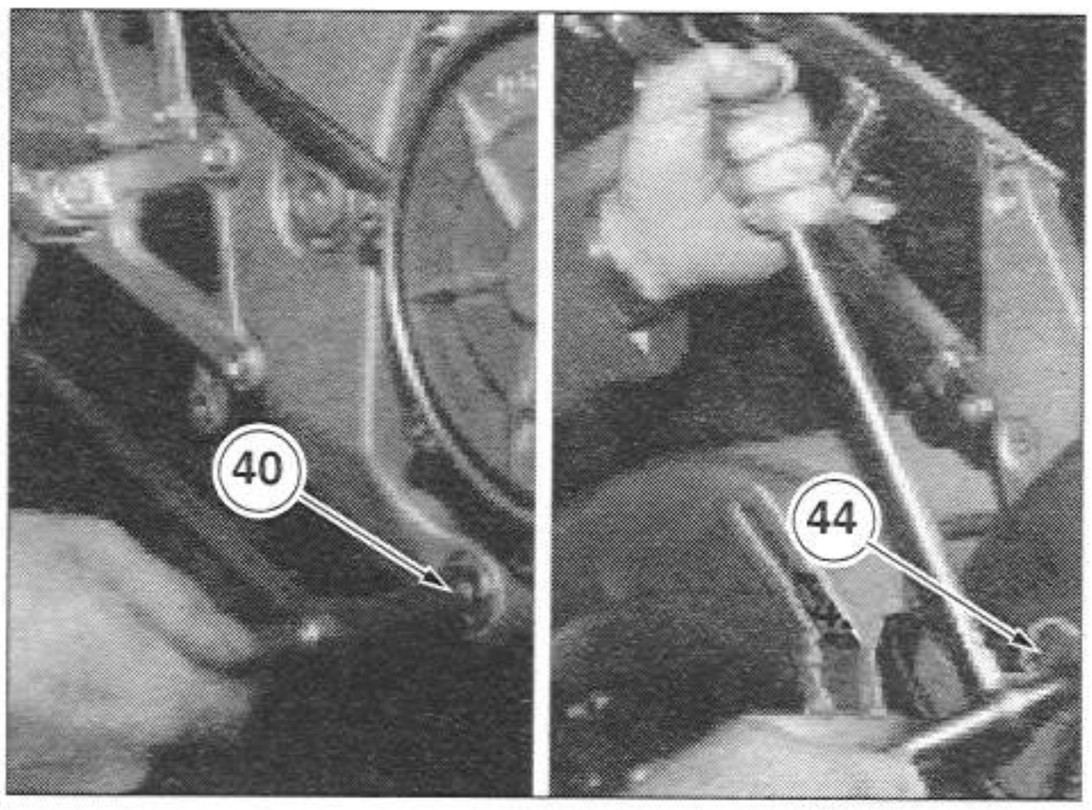

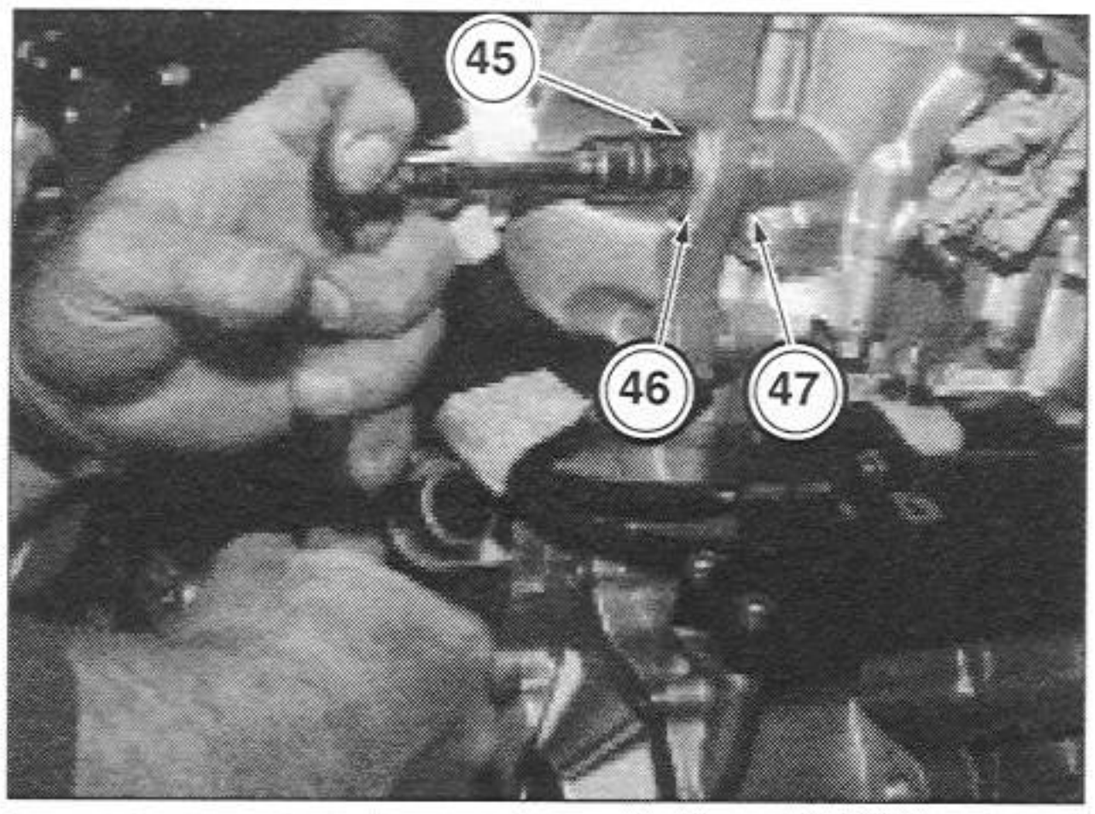

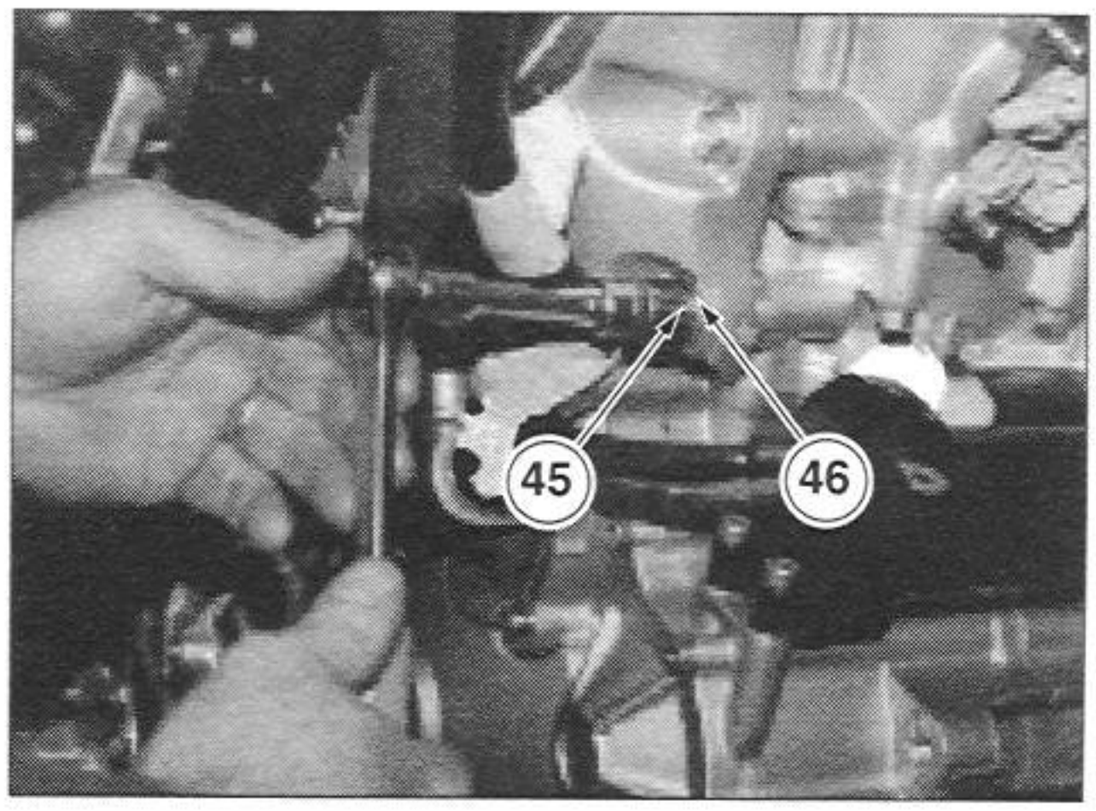

⚠ DANGER

The engine is now free and not fastened anywhere.

Be extremely careful when moving it; watch your fingers and limbs.

Clear the floor on which the engine is to be set down of any tools and clean thoroughly. Failure to observe this warning can lead to serious bodily injury.

- Raise the hoist arm a few millimeters to "release" the engine from the frame.
- Lower the hoist arm until the engine is resting on the ground.
- Secure the engine so that it will not tip over even if poorly balanced.
- Unhook the slings (29) from the hoist.
- Slide the slings (29) off the frame.
- Move the engine out from underneath the frame.
- Connect the slings (29) back to the engine.

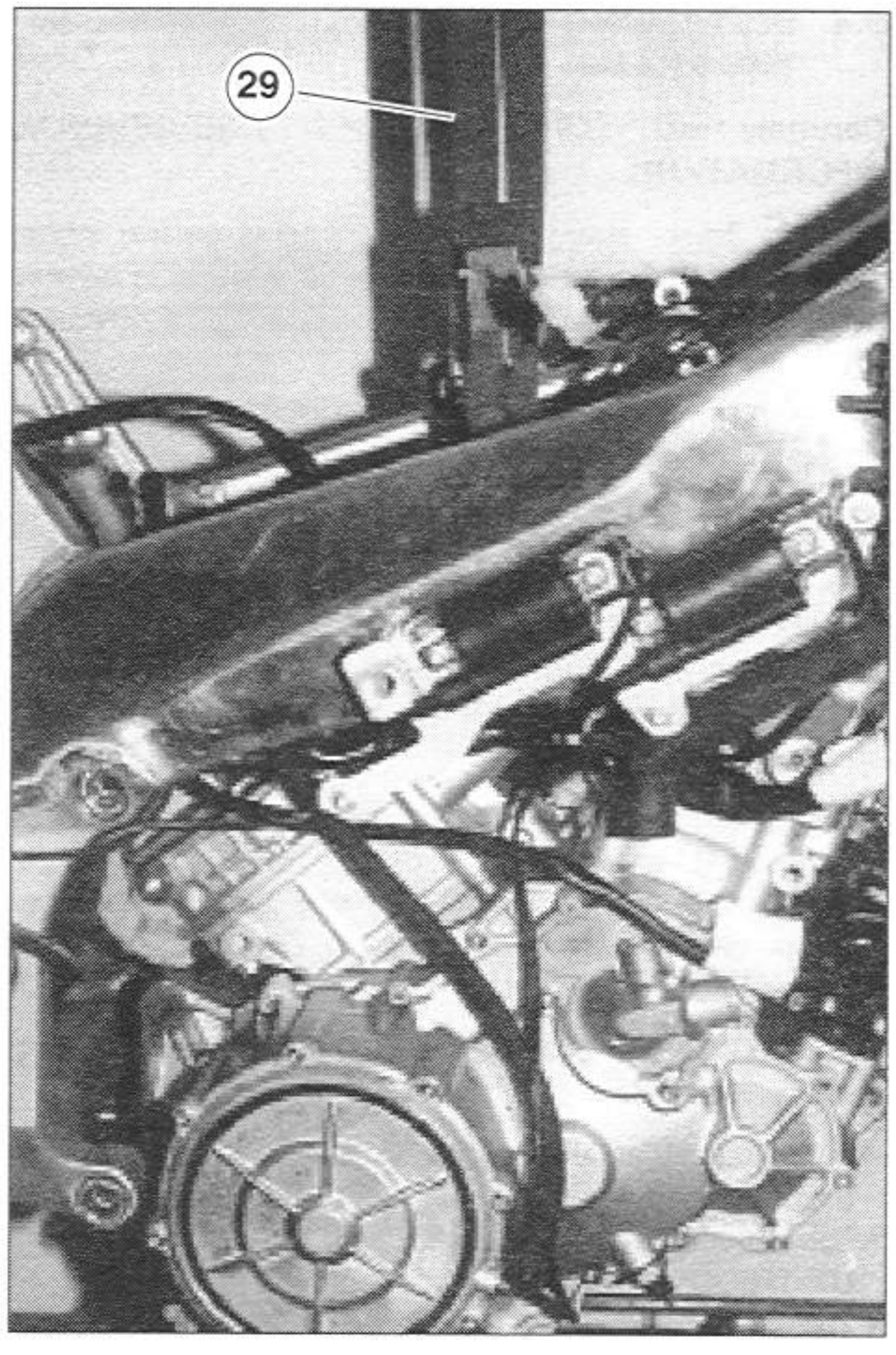

NOTE If you will be working on the engine, set it on the stand (8) (code 8140187 + 8140188).

⚠ WARNING

If you do not need to work on the engine, leave it resting on the floor and attached to the slings (29) and hoist, for extra safety.

- Clean the outside of the engine thoroughly.

⚠ WARNING

Use a cleanser, brushes and rags to clean the exterior of the engine.
Avoid damaging rubber and plastic parts with corrosive or non-flammable solvents.

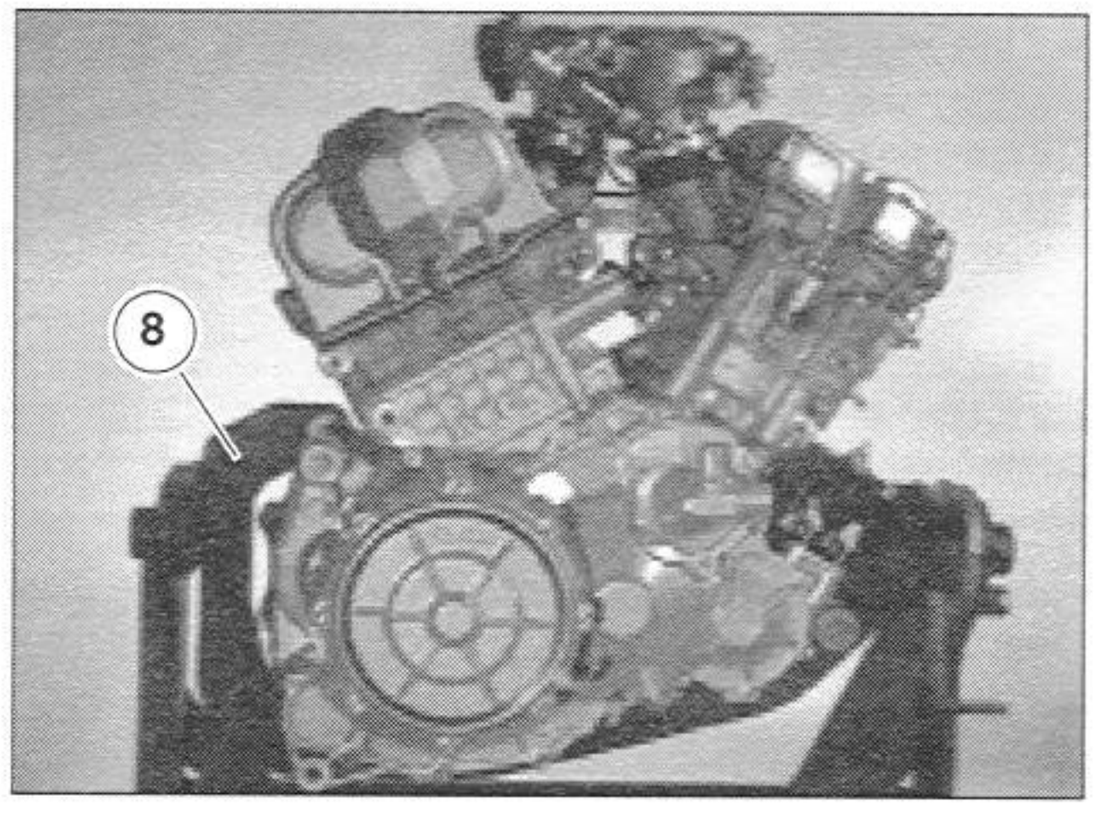

3.4 INSTALLING THE COMPLETE ENGINE IN THE FRAME

Carefully read 1.3.9 (PRECAUTIONS AND GENERAL INFORMATION).

NOTE To reinstall the complete engine on the frame, follow the same procedure used for its removal in reverse order, see 3.3 (REMOVING THE COMPLETE ENGINE FROM THE FRAME).
Nonetheless, before commencing, you must first perform the steps described below.

⚠ DANGER

The engine is heavy and can easily crush your fingers or other bodily parts. Always work with great care using only approved engine lifting equipment. Failure to observe this warning can result in great bodily harm.

- Make sure the adjuster bushings (1 - 2) and all the way up against the frame.
- Nudge the engine along gradually until the engine/ frame fastening holes(A - B - C - D) are all perfectly aligned.

When you have finished re-installing the engine, proceed as described below.

- Make sure that all nuts/bolts securing the engine are properly torqued.
- Top up coolant, see 2.14 (CHECKING AND TOPPING UP THE COOLANT).
- Top up engine oil, see 2.12 (CHECKING AND TOPPING UP THE ENGINE OIL LEVEL).
- If the engine has been overhauled, bleed the engine oil circuit and check the engine oil pressure. Check the drive chain tension and adjust if necessary, see 2.35.1 (CHECKING THE PLAY) and 2.35.3 (ADJUSTING THE DRIVE CHAIN).

⚠ WARNING

Perform a careful and thorough check of all components removed when the engine was disassembled from the frame, in particular,

- make sure that the electric cables are fastened with appropriate clamps.

⚠ WARNING

None of the cables must be twisted and/or pinched.

- the electric connectors are connected properly;
- the lines and couplings are connected properly and secured with appropriate clamps;
- the throttle cable and cold-start cable slide freely and are not pulled too tight when the handlebar is turned;
- the gearshift lever is positioned correctly;
- the rear brake lever is positioned correctly.

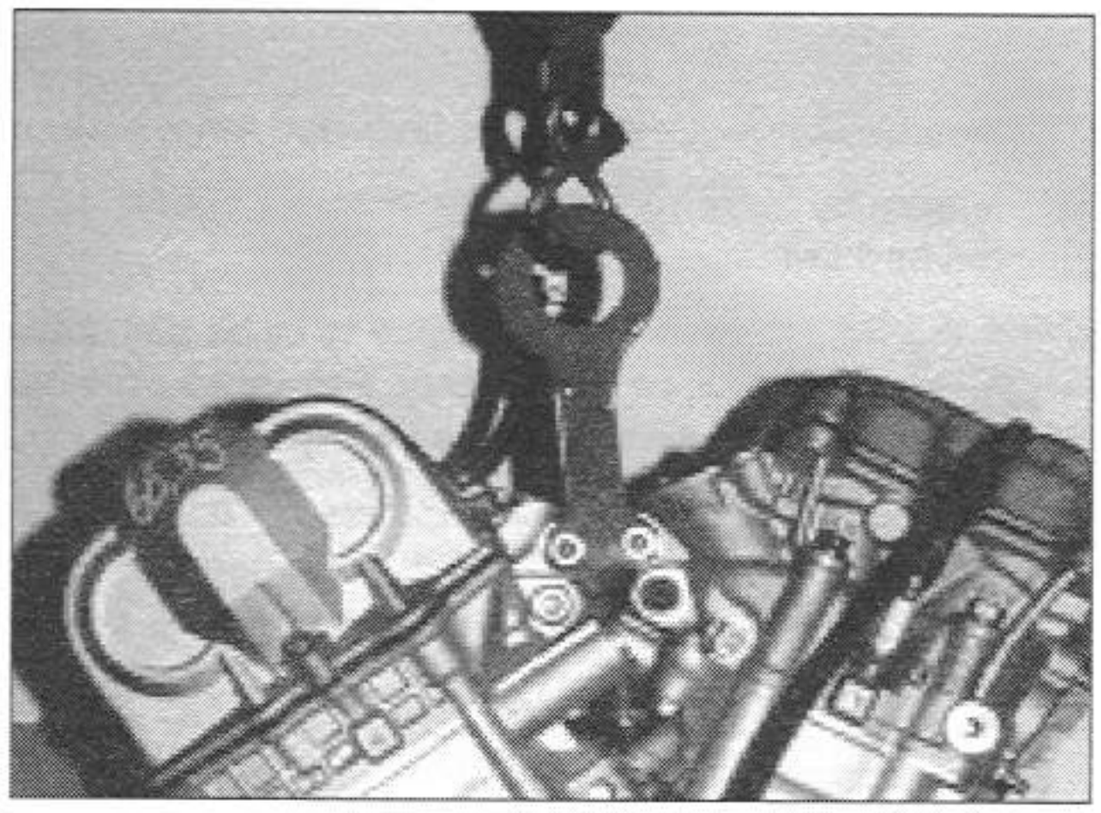

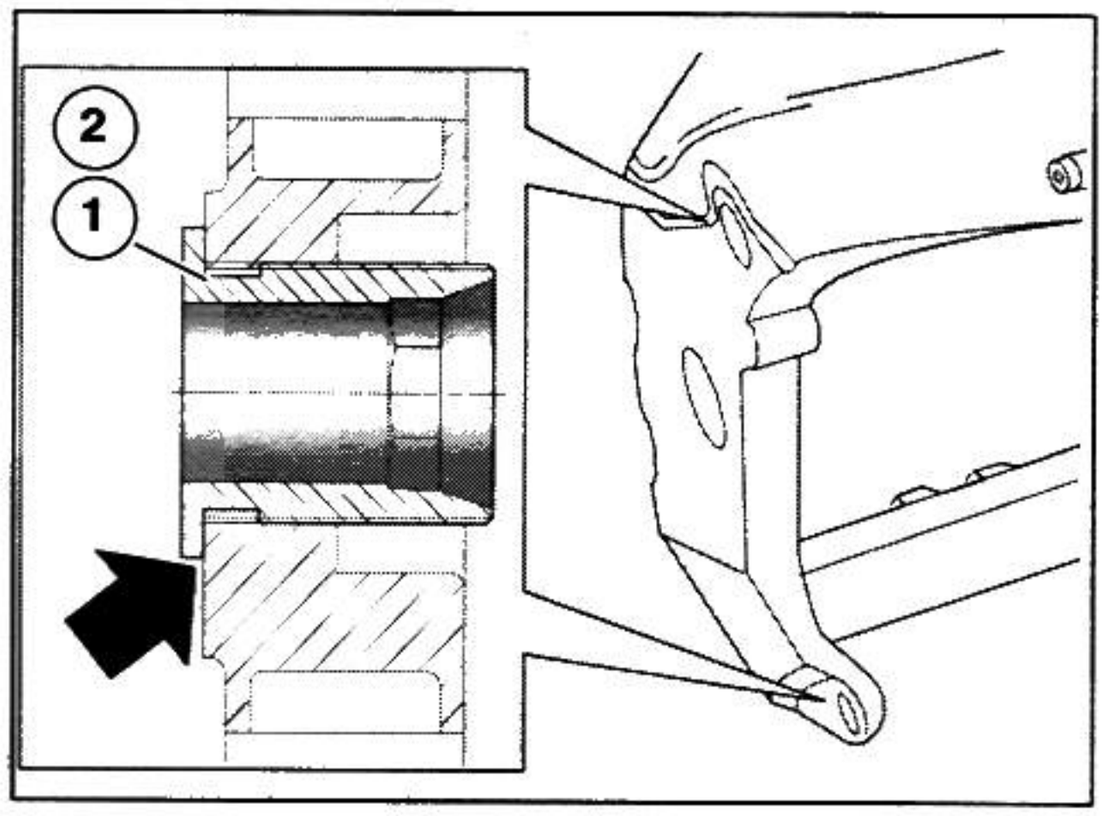

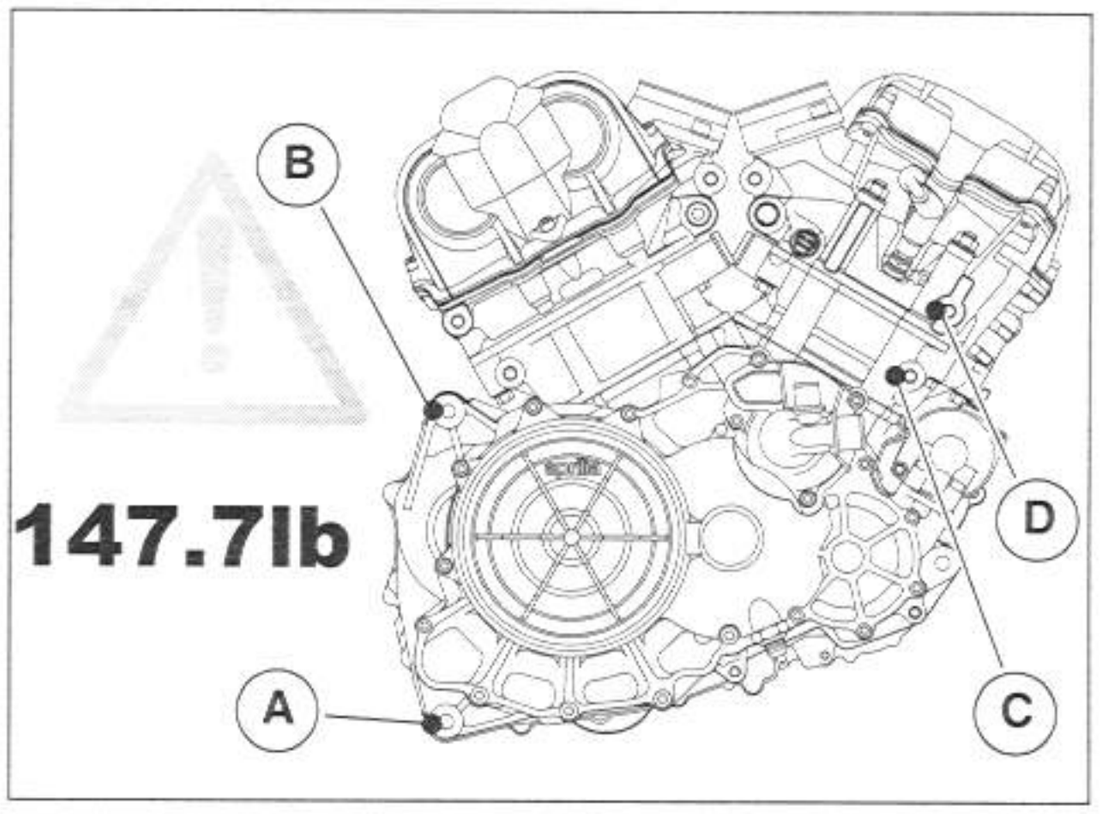

NOTES

NOTES

FUEL SYSTEM

4

FUEL SYSTEM

TABLE OF CONTENTS

4.1 FUEL TANK 4-3-00
4.1.1 MAINTENANCE 4-4-00
4.1.2 CHECK THE FUEL INTAKE 4-4-00

4.2 DRAINING FUEL FROM THE TANK. 4-5-00

4.3 COMPLETELY REMOVING THE FUEL INTAKE PUMP UNIT 4-5-00

4.4 REMOVING THE FUEL LEVEL SENSOR 4-6-00

4.5 REMOVING THE FUEL DELIVERY FILTER 4-6-00

4.6 REMOVING THE FUEL INTAKE PUMP 4-7-00

4.7 ENGINE MANAGEMENT 4-8-00
4.7.1 GENERAL INFORMATION 4-8-00
4.7.2 SENSORS 4-9-00
4.7.3 INJECTION, SYSTEM DIAGRAM 4-11-00
4.7.4 ELECTRONIC CONTROL UNIT 4-12-00
4.7.5 AUTOMATIC TESTING 4-13-00
4.7.6 ROUBLESHOOTING IN THE ELECTRONIC SYSTEM USING DISPLAYED INFORMATION 4-13-00

4.8 THROTTLE BODY 4-14-00
4.8.1 REMOVING THE THROTTLE BODY .. 4-14-00
4.8.2 REMOVING THE INJECTORS 4-15-00

4.9 DISASSEMBLING THE THROTTLE BODY 4-16-00

4.10 INSPECTING THE THROTTLE BODY 4-17-00
4.10.1 TESTING THE INJECTORS 4-17-00
4.10.2 THROTTLE BODY 4-17-00
4.10.3 THROTTLE VALVE POTENTIOMETER 4-17-00
4.10.4 SYNCHRONIZING THE CYLINDERS . 4-18-00
4.10.5 ADJUSTING THE CO 4-19-00
4.10.6 ALIGNING THE THROTTLE VALVE POSITION SENSOR 4-21-00

4.1 FUEL TANK

The refueling cap is at the top of the tank, while the following are installed at the bottom:

- The fuel pump unit;
- The water drain tube, which drains away any water accidentally introduced into the fuel line from rain or while washing;
- The overflow drain, which accommodates overflow gasoline in the event of overfilling.

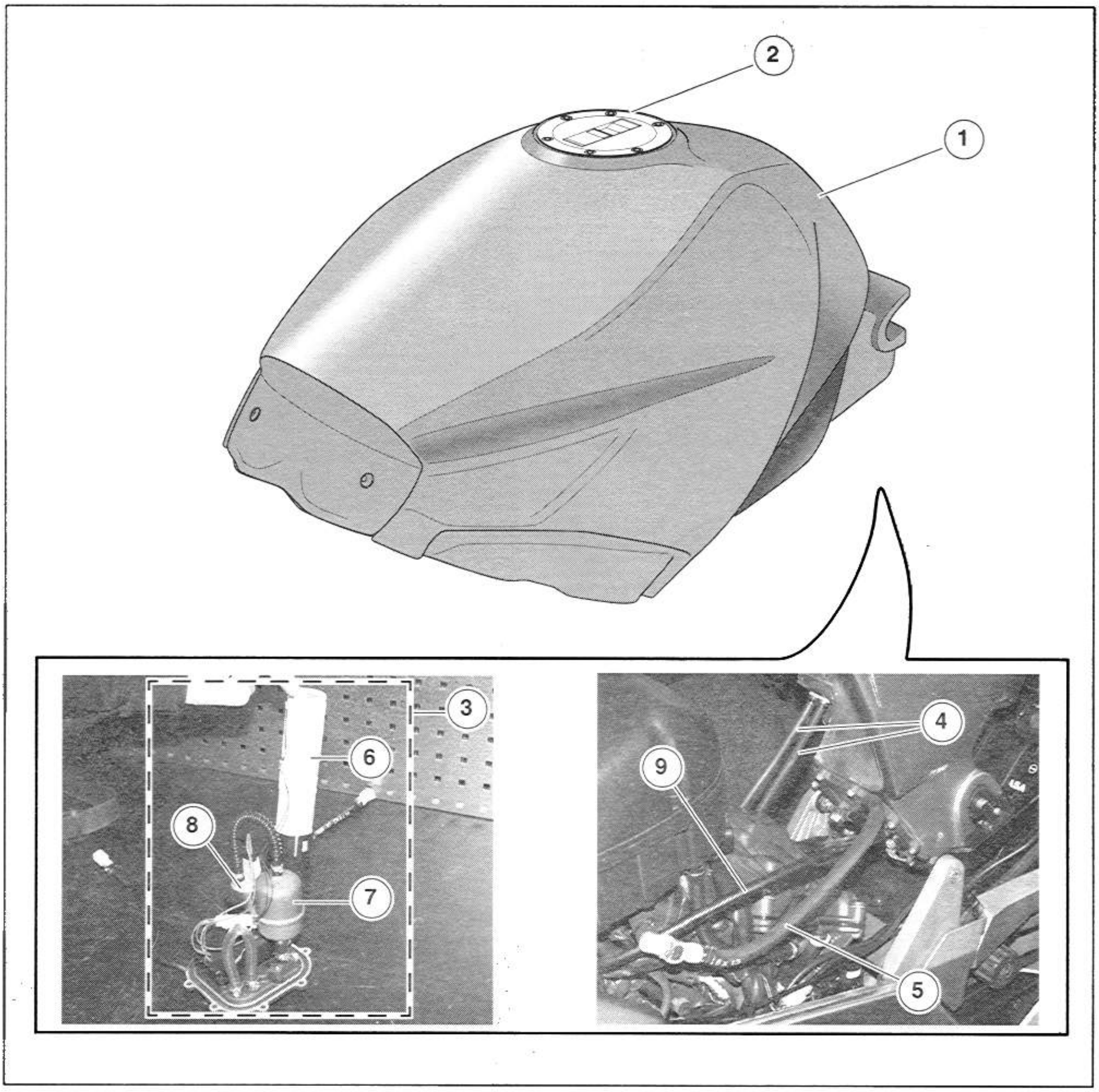

Legend

1) Fuel tank
2) Filling cap
3) Fuel intake pump unit
4) Drainage lines
5) Fuel return line
6) Fuel sensor
7) Fuel delivery filter
8) Fuel pump
9) Fuel delivery line

Carefully read 1.3.9 (PRECAUTIONS AND GENERAL INFORMATION), see 1.4.1 (FUEL).

⚠ DANGER

Gasoline fumes are harmful to your health.
Before proceeding, make sure that the work area has adequate ventilation. .
Do not inhale the fuel fumes.
Avoid skin contact with the gasoline.
Do not smoke or use open flames.
Always dispose of fuel in compliance with environmental regulations.

4.1.1 MAINTENANCE

- When the fuel pump assembly is to be removed, see 4.3 (COMPLETELY REMOVING THE FUEL INTAKE PUMP UNIT). We recommend that you make sure the lines (1-2-3) are intact, and that the following are in good working order:
- fuel level sensor (4) see 6.10.3 (ENGINE OIL PRESSURE SENSOR);
- fuel intake pump (5), see 6.7.2 (CHECKING THE FUEL PUMP).
- Replace the delivery filter (6).

NOTE During this procedure, it is also advisable to wash the tank thoroughly.

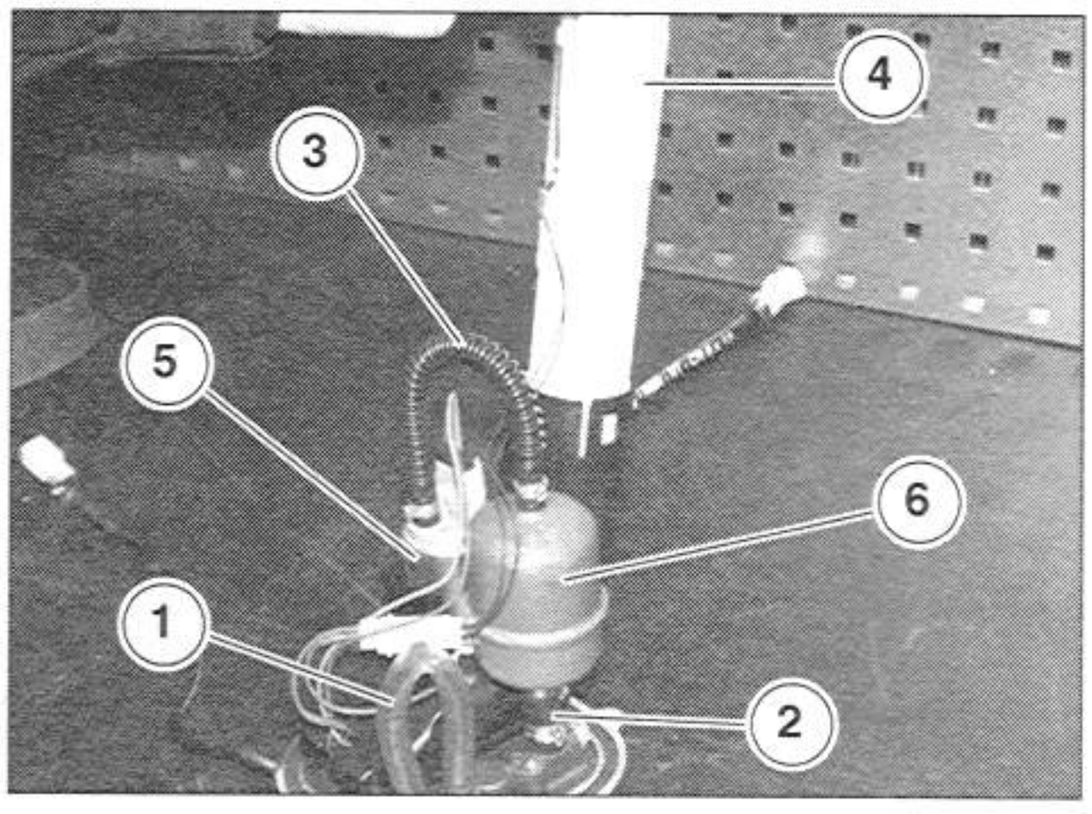

4.1.2 CHECK THE FUEL INTAKE

Check the fuel lines every 4687 mi (7500 km) or every 8 months; replace every 4 years.

⚠ DANGER

Be especially thorough in checking the delivery line (1), return line (2), and their fittings; the working pressure of the delivery line (1) is approximately 65.2 PSI (450 kPa) (4.5 bar).

Any fuel lines that are cracked or split must always be replaced.
If you find any fuel leaks from the flange (3), they may be caused by a damaged O-ring (4), therefore:

- Remove the complete pump assembly, see 4.3 (COMPLETELY REMOVING THE FUEL INTAKE PUMP UNIT); check its condition and replace if necessary.

NOTE For more information see 6.7.2 (CHECKING THE FUEL PUMP).

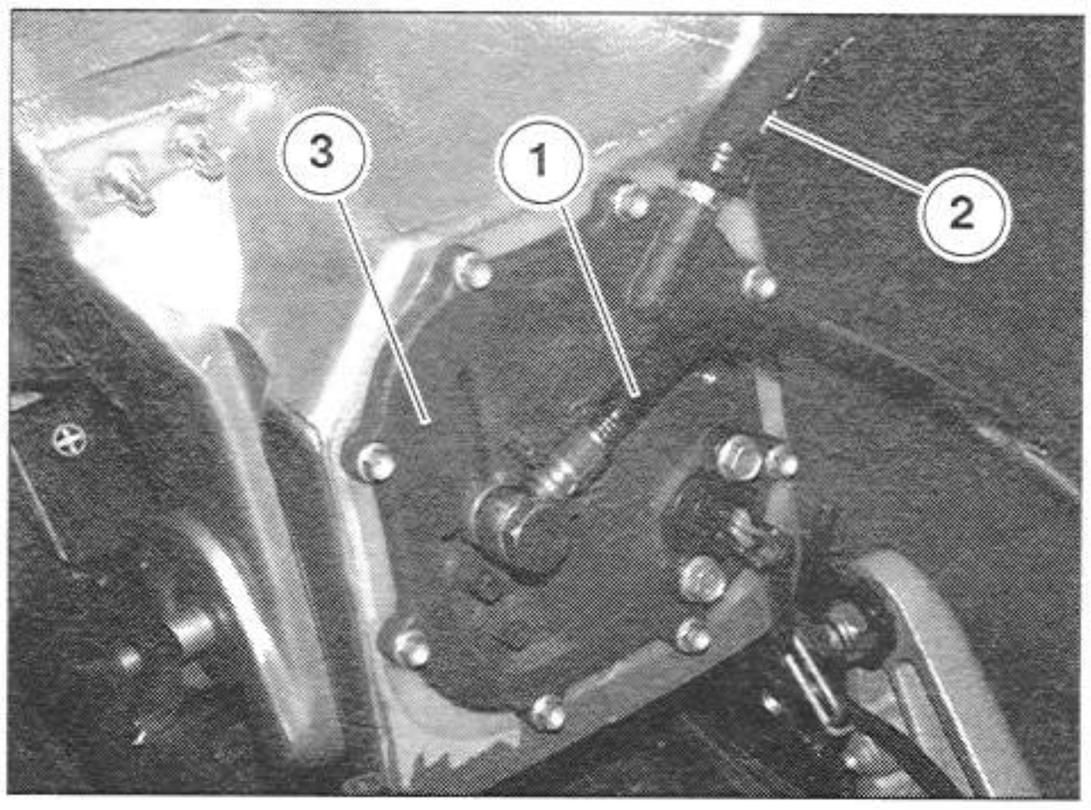

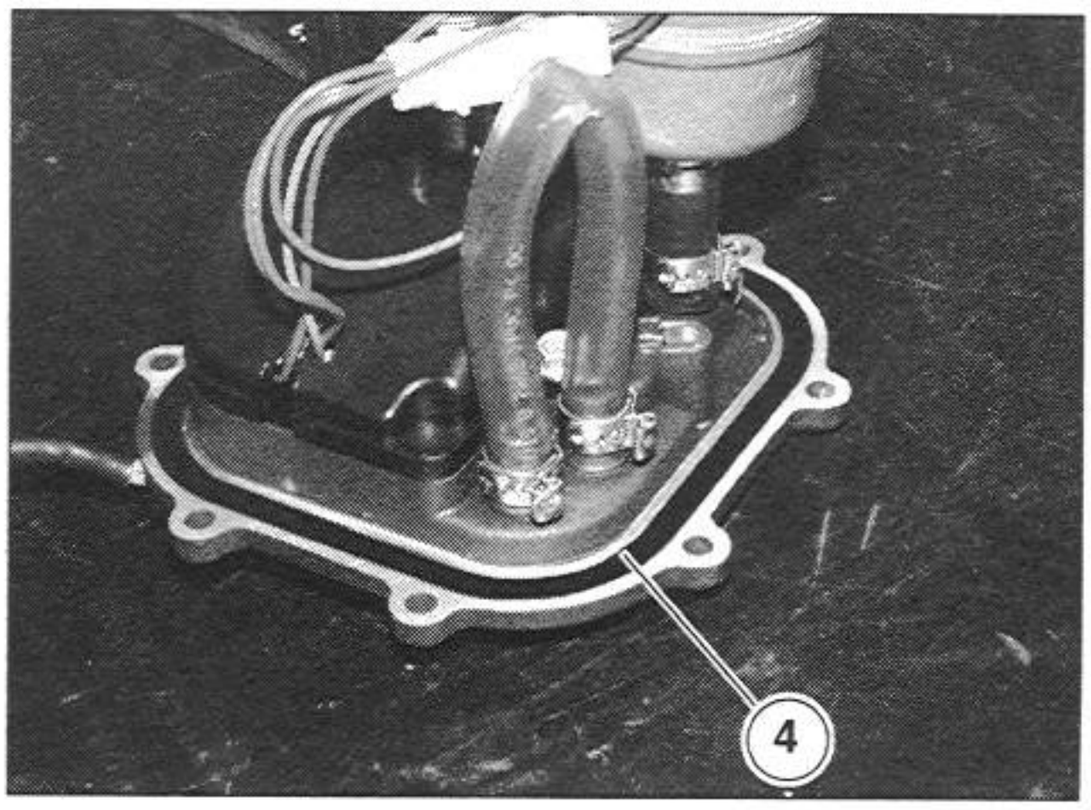

4.2 DRAINING FUEL FROM THE TANK

To drain the fuel tank, see 2.9 (DRAINING FUEL FROM THE TANK).

4.3 COMPLETELY REMOVING THE FUEL INTAKE PUMP UNIT

Carefully read 1.3.9 (PRECAUTIONS AND GENERAL INFORMATION), 1.4.1 (FUEL) and 4.1.1 (MAINTENANCE).

- Remove the fuel tank, see 7.1.6 (REMOVING THE FUEL TANK COMPLETELY).

⚠ WARNING

Handle the reservoir with care; do not scrape to avoid damaging the paint.

NOTE Place the tank on a clean surface, with the pump assembly facing upwards.

- Unscrew and remove the bolts (1).

NOTE When reassembling, insert all bolts by hand and cross-tighten.

Tightening torque for bolts (1): 4.4 ftlb (6 Nm).

⚠ WARNING

When removing the pump assembly (2), be careful not to damage the fuel level sensor (3) and lines.

- Remove the complete pump assembly (2).

⚠ WARNING

When reassembling, make sure that the click-clamp (4) is facing the opposite way from the fuel level sensor support (5), so that the click-clamp (4) doesn't get in the way of the fuel delivery line.
Upon reassembly, apply LOCTITE® 518 to the O-ring (6).

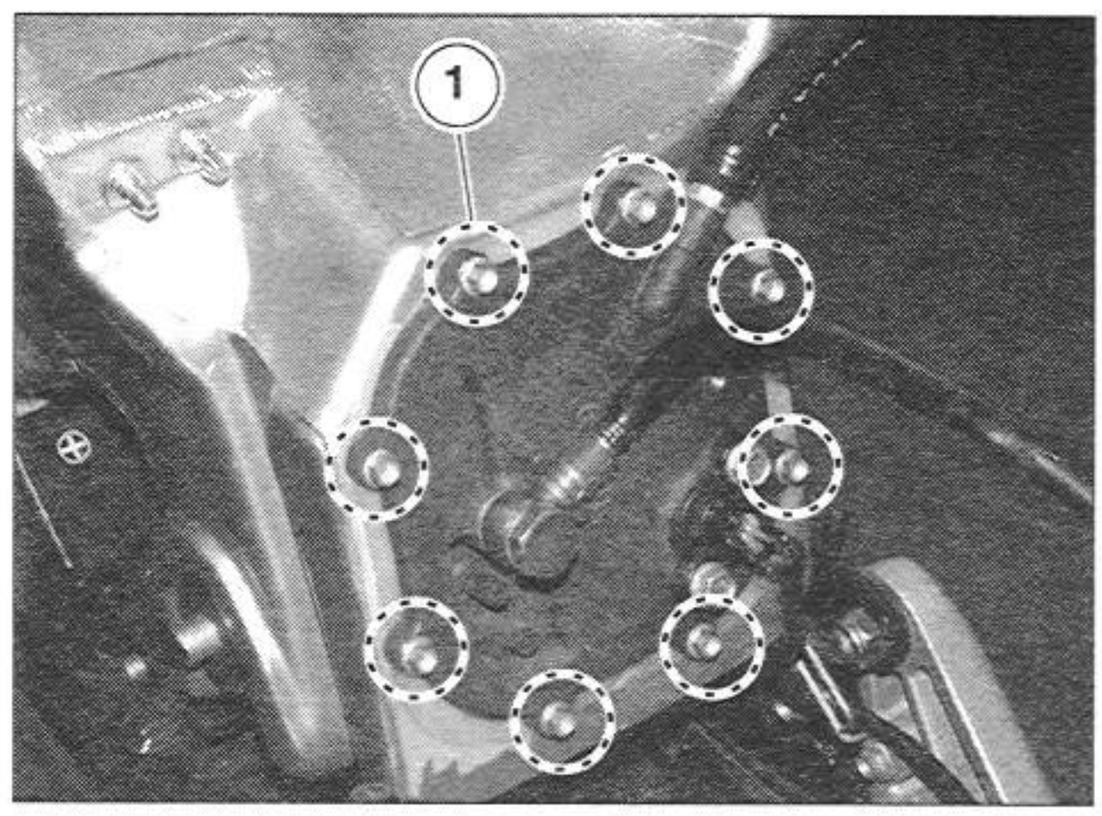

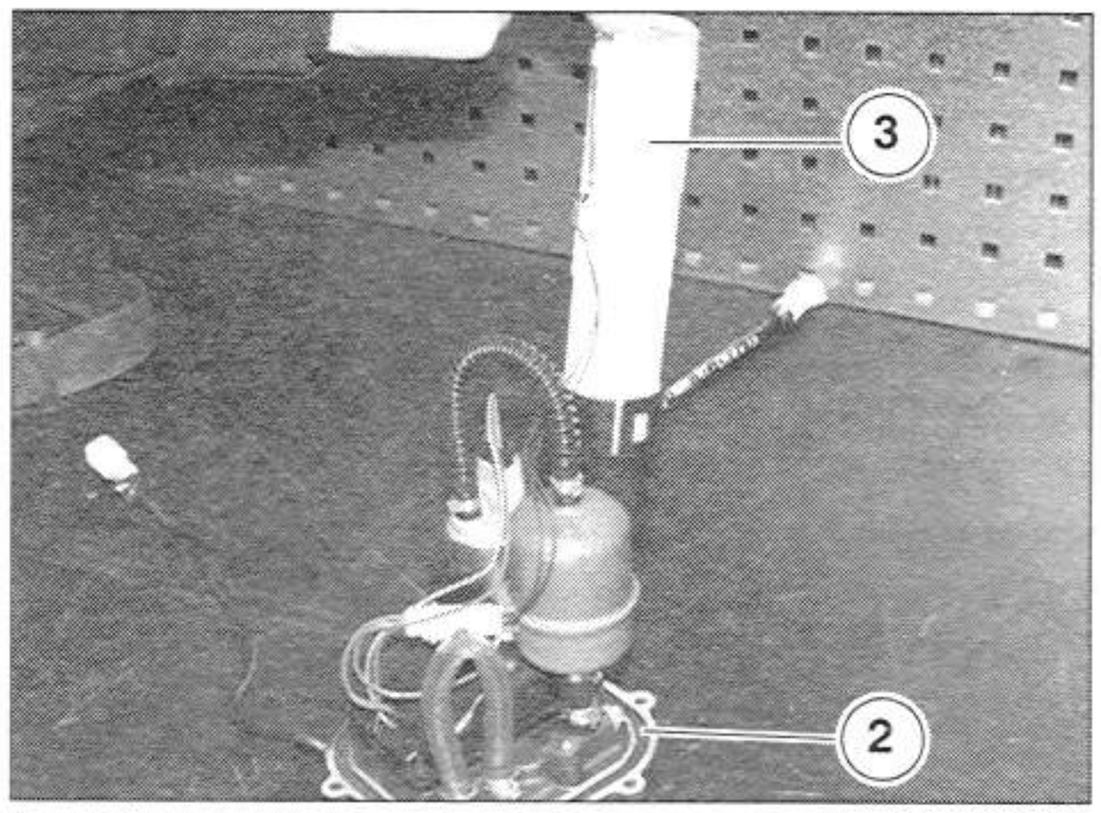

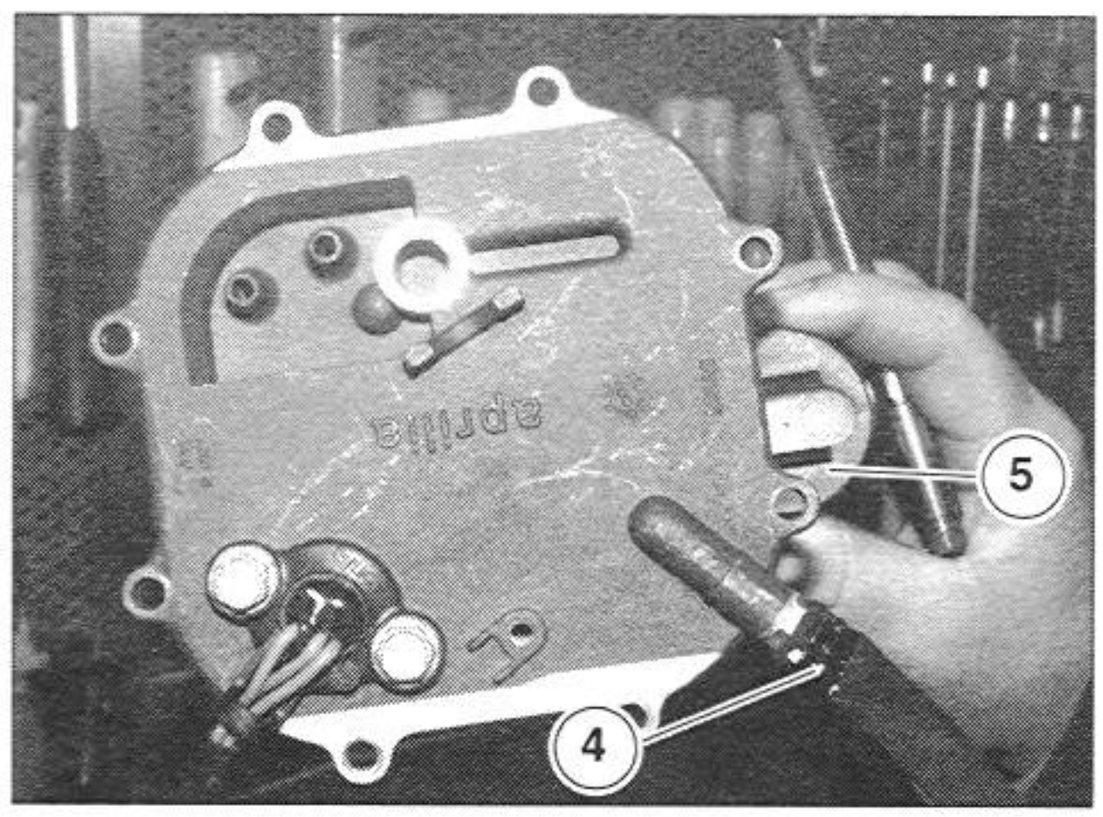

4.4 REMOVING THE FUEL LEVEL SENSOR

- Remove the complete fuel intake pump unit, see 4.3 (COMPLETELY REMOVING THE FUEL INTAKE PUMP UNIT).
- Disconnect the electrical connector (1).

⚠ WARNING

When reassembling, make sure the electrical connector (1) is fitted properly.

- Use a screwdriver to help you remove the fuel level sensor (2) from the support (3).

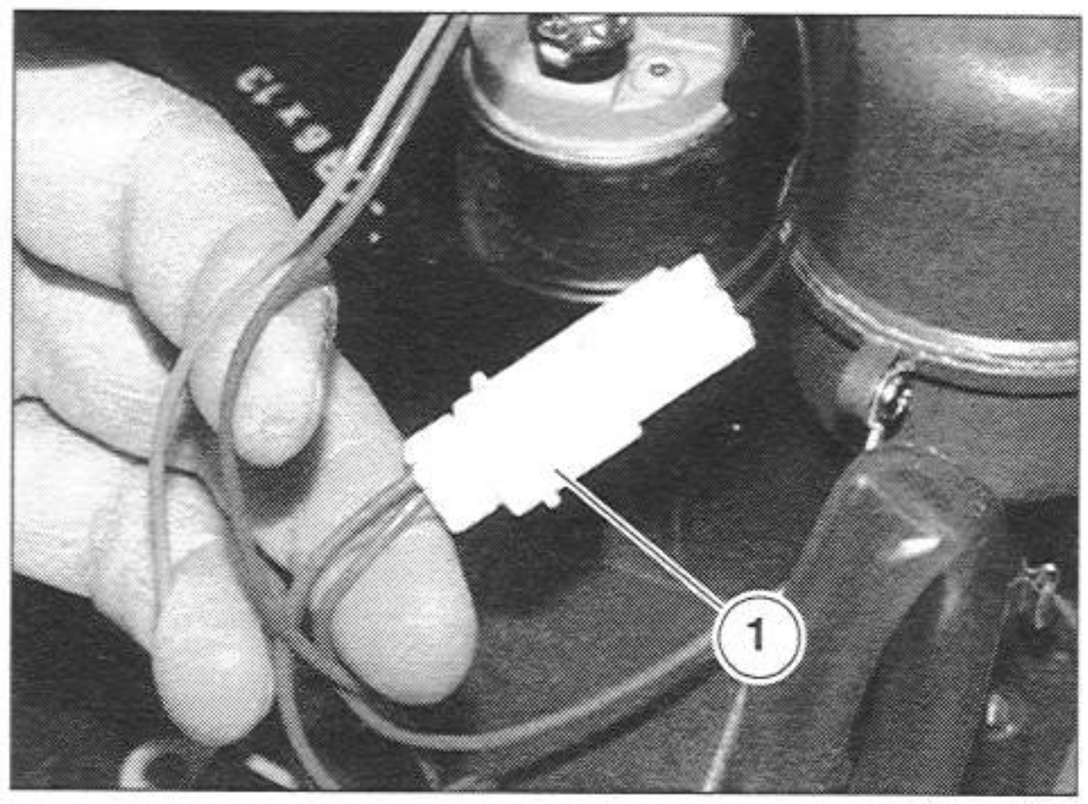

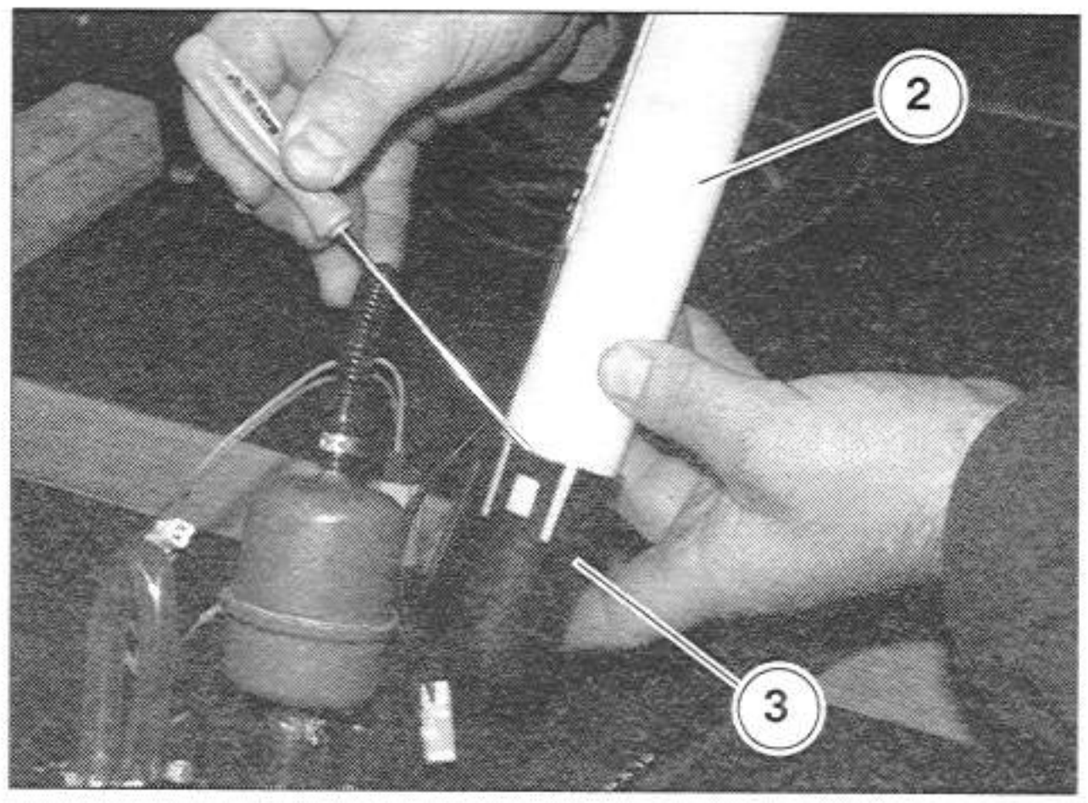

4.5 REMOVING THE FUEL DELIVERY FILTER

- Remove the complete fuel intake pump unit, see 4.3 (COMPLETELY REMOVING THE FUEL INTAKE PUMP UNIT).
- Unscrew and remove the screw (6) to free the grounding cable.

NOTE Use the special click clamp installation pliers (code 0277295); during reassembly, replace each clamp with a new one of the same kind.

- Release the click clamp (1-2).
- Slide the hose (3) off the filter (4).
- Slide the filter (4) off the hose (5).

⚠ WARNING

Do not re-use filters.

- Replace the filter (4) with another of the same kind.

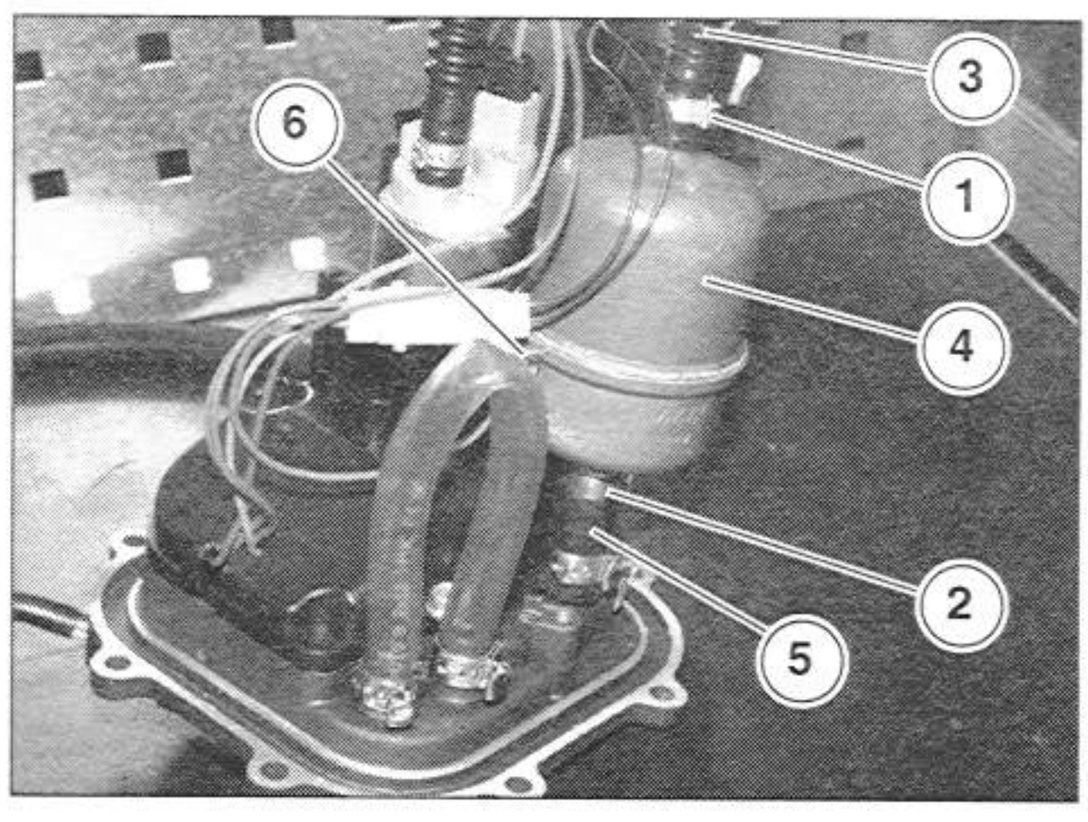

4.6 REMOVING THE FUEL INTAKE PUMP

- Remove the complete fuel intake pump unit, see 4.3 (COMPLETELY REMOVING THE FUEL INTAKE PUMP UNIT).
- Disconnect the electrical connector (1).

⚠ WARNING

When reassembling, make sure the electrical connector (1) is fitted properly.

NOTE Use the special click clamp installation pliers (code 0277295); during reassembly, replace each clamp with a new one of the same kind.

- Release the click clamp (2).
- Slide the fuel hose (4) from the pump (3).
- Unscrew and remove the three bolts (5).

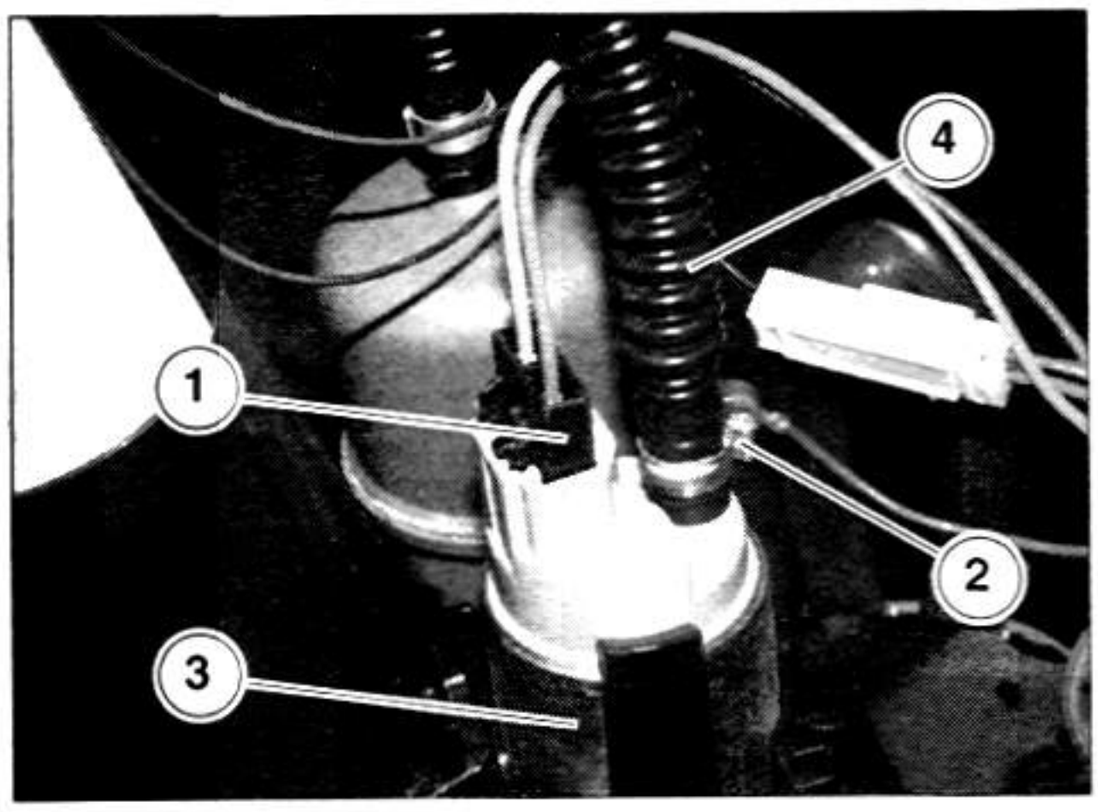

⚠ WARNING

When performing the operations listed below, take care not to stretch or twist the electrical wires.

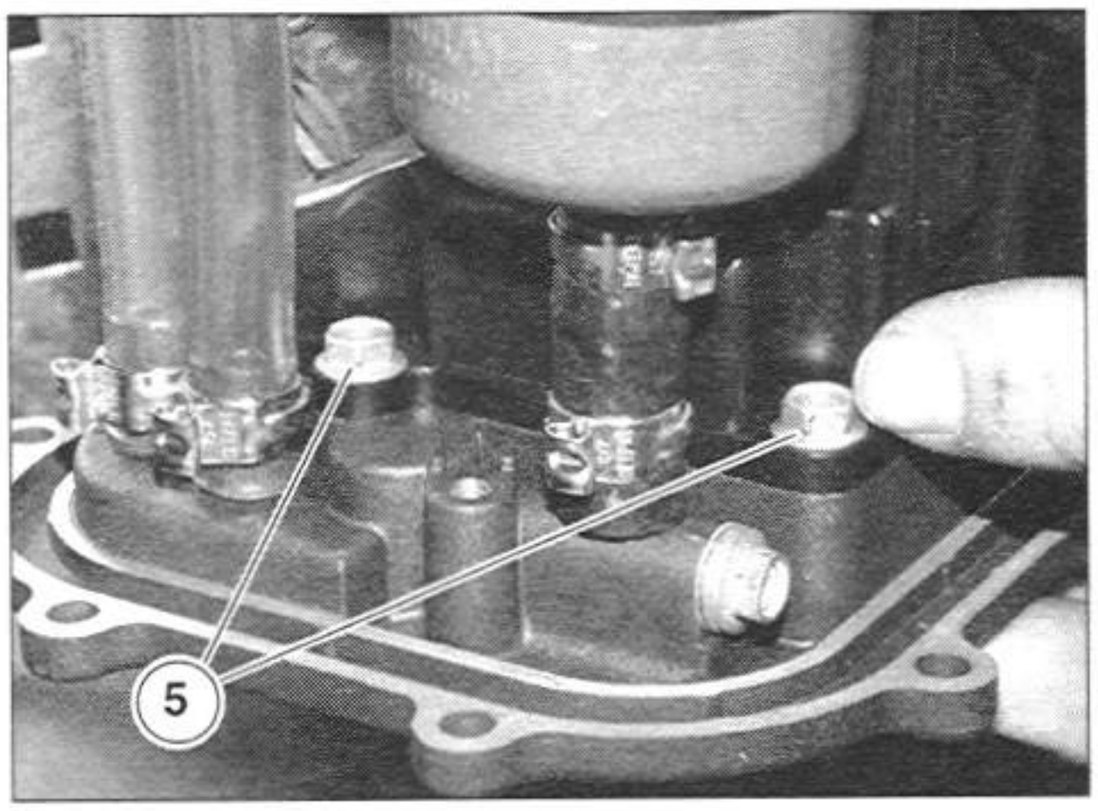

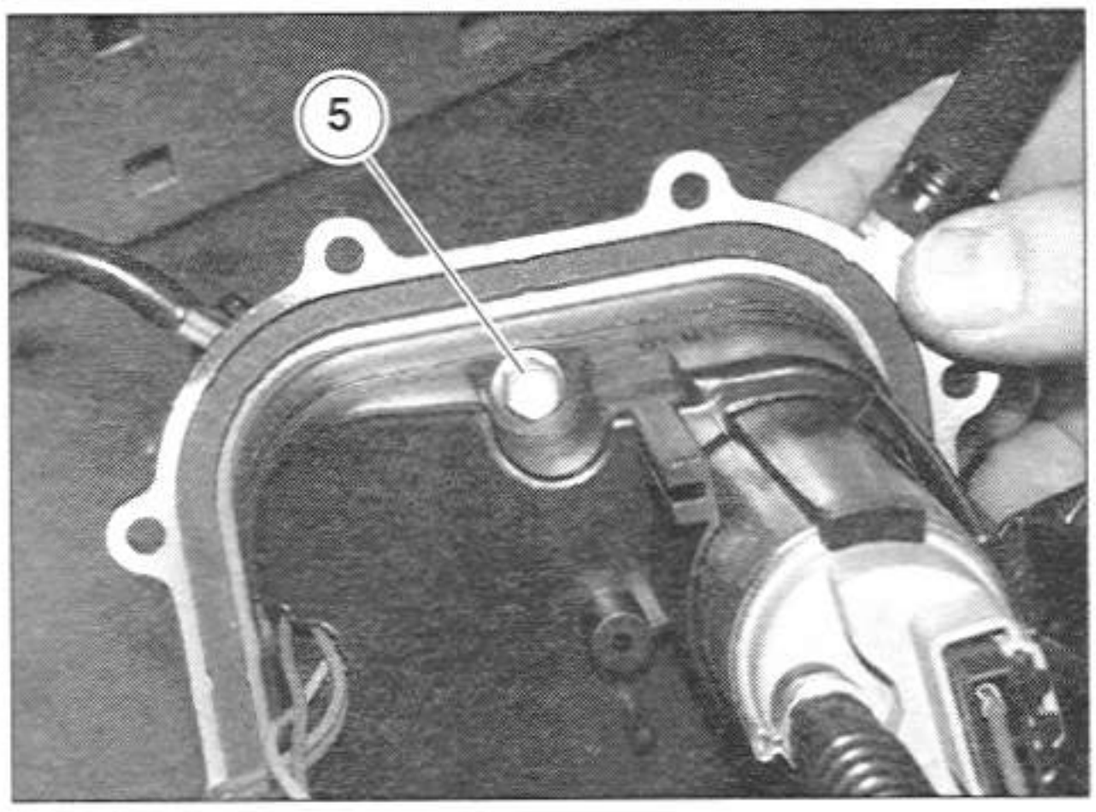

- Remove the snap ring (6) from the filter element (7).

⚠ WARNING

When reassembling, replace the snap ring (6) with a new one of the same kind.

- Remove the filter element (7).

⚠ WARNING

If the filter element (7) show traces of sediment, clean it using compressed air.

- Use a screwdriver to help you slide it out from the side opposite the fuel pump (3).

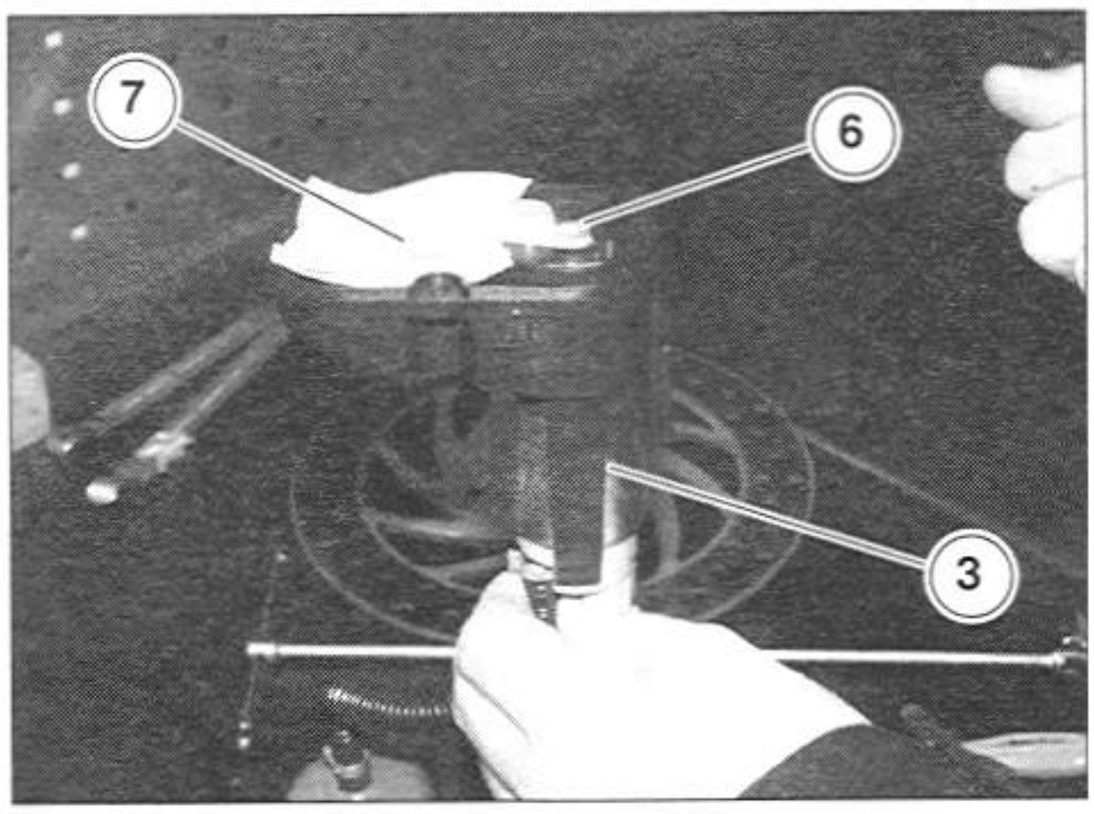

4.7 ENGINE MANAGEMENT

4.7.1 GENERAL INFORMATION

The "heart" of engine management system consists of the electronic control unit (Engine Control Unit), which manages and optimizes ignition and fuel injection.

- Ignition is managed based on specific user data. The electronic control unit detects the exact ignition angle from the engine rpm signals and position of the throttle valves (volume of air).
- Injection time (amount of fuel) is controlled by engine speed, the throttle valve position (which in turn controls the volume of air used by the engine and the manifold pressure) and is corrected by various correction factors provided by the various sensors.
- Every time the engine is switched on, the electronic control unit checks the sensors and ignition coils, making sure that they are functioning properly If any errors are detected, the message "EFI" flashes on the display.
- The safety devices inside the electronic control unit shut down both ignition and fuel injection if the engine speed exceeds the maximum allowable of 10,500 rpm, or if the vehicle falls over. When the vehicle is placed on the side stand and the gears engaged, ignition is cut off to prevent the vehicle from starting.

NOTE Any alterations or changes made to the exhaust system, intake system or engine control unit can result in serious damage to the engine. Any modification, installation or use of non-original parts shall completely void the warranty and relieve the manufacturer of any and all liability.

4.7.2 SENSORS

Camshaft position sensor (1)
Location: in the flywheel cover (2).

This is a sensor that detects the movement of the selected phonic wheel on the crankshaft. The selected wheel has a unique pulse length, triple the distance/ clearance, to act as a reference point on the wheel. Using this reference point it is possible to calculate the crankshaft position.
In a four-stroke engine, this alone is not enough information about the reference point to allow us to determine whether a cylinder near top dead center (TDC) is in the intake or exhaust stage. To obtain this information, it is necessary to obtain further details about the position by applying a strategy of varying the engine speed.
The information about the engine position is used to determine the engine speed, and for any activities that must be synchronized with the wheel rotation, such as fuel injection.

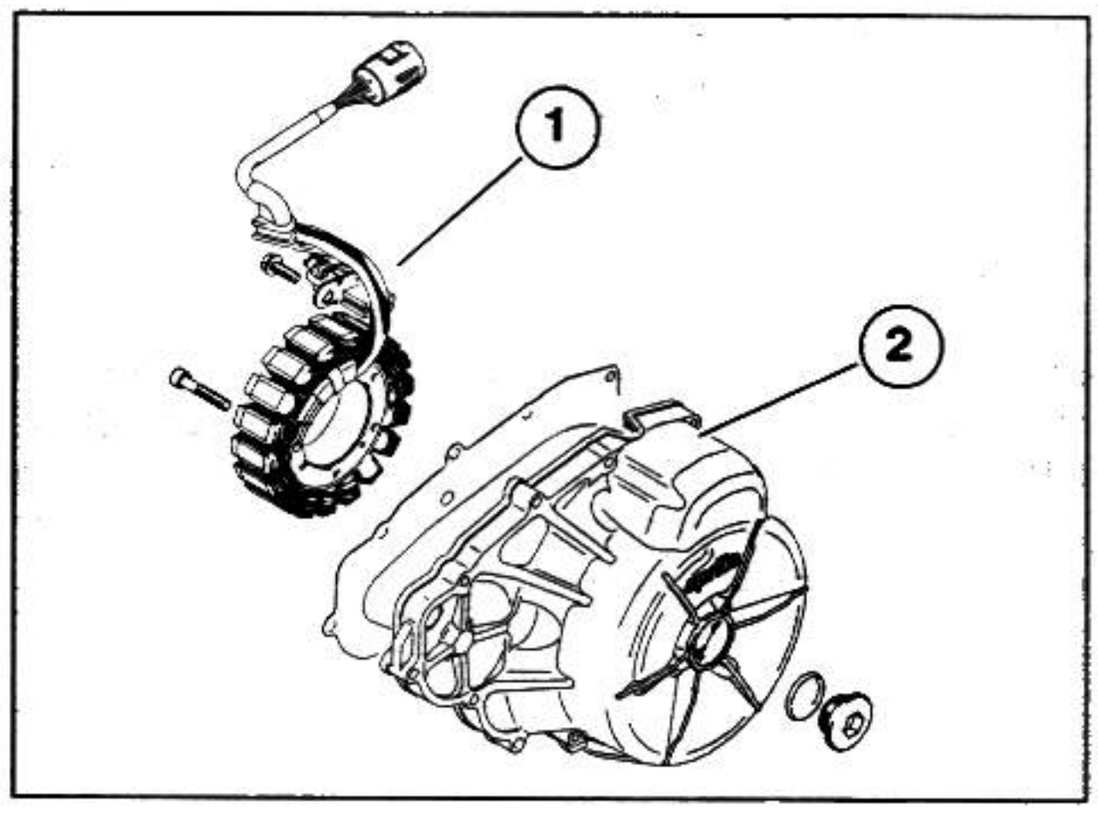

Atmospheric pressure sensor
Location: inside the electronic control unit (3).

This sensor is connected to the air gap via a small hose. It is a piezoelectric sensor that measures the absolute air pressure. The measurement point is located to greatly limit changes in pressure caused by engine induction processes. The nominal pressure within the air gap corresponds to the atmospheric pressure. The air gap pressure is used to compensate for load density changes in the fuel system.

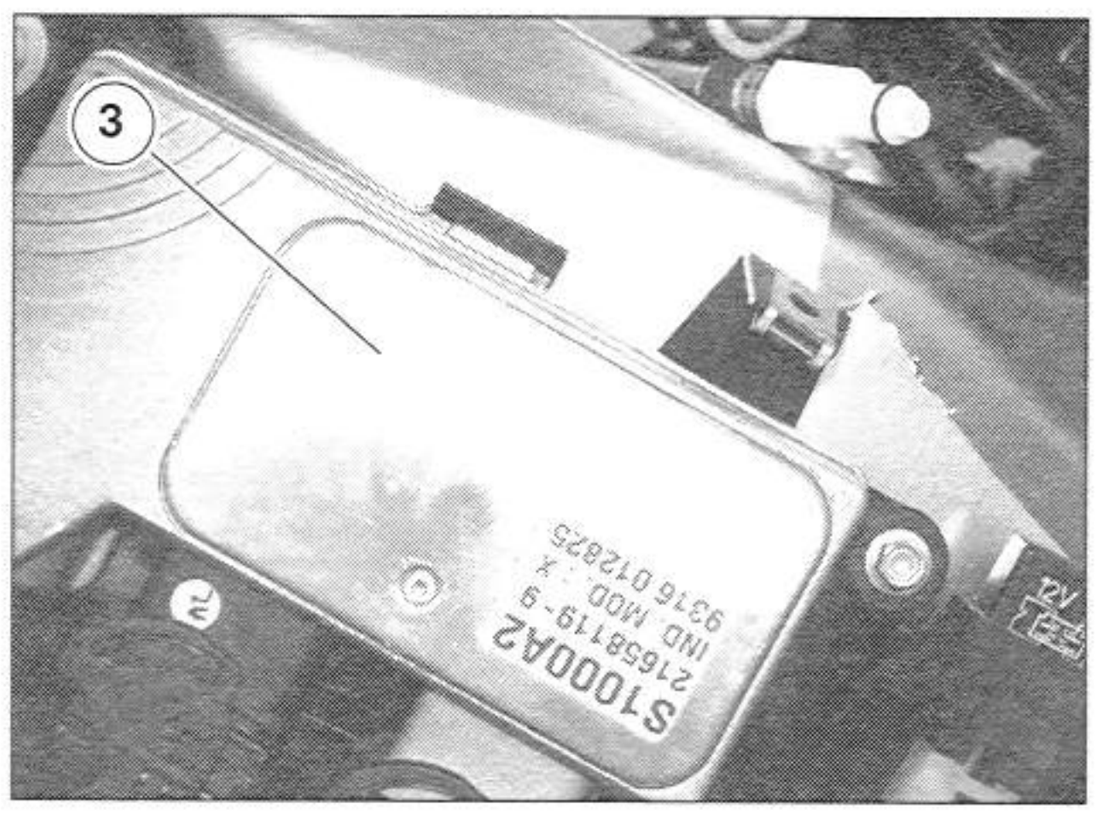

Throttle position sensor (4)
Location: on the throttle body (5).

This sensor is a potentiometer, and for greater precision its position is determined by comparing the output voltage with the input voltage (rated 5 V).
Once the throttle is open, the output voltage from the sensor increases in a linear fashion. The throttle is the main driving control, which regulates the volume of air admitted to the engine. The throttle angle is therefore used to assess the load and determine whether the rider wishes to accelerate or decelerate.

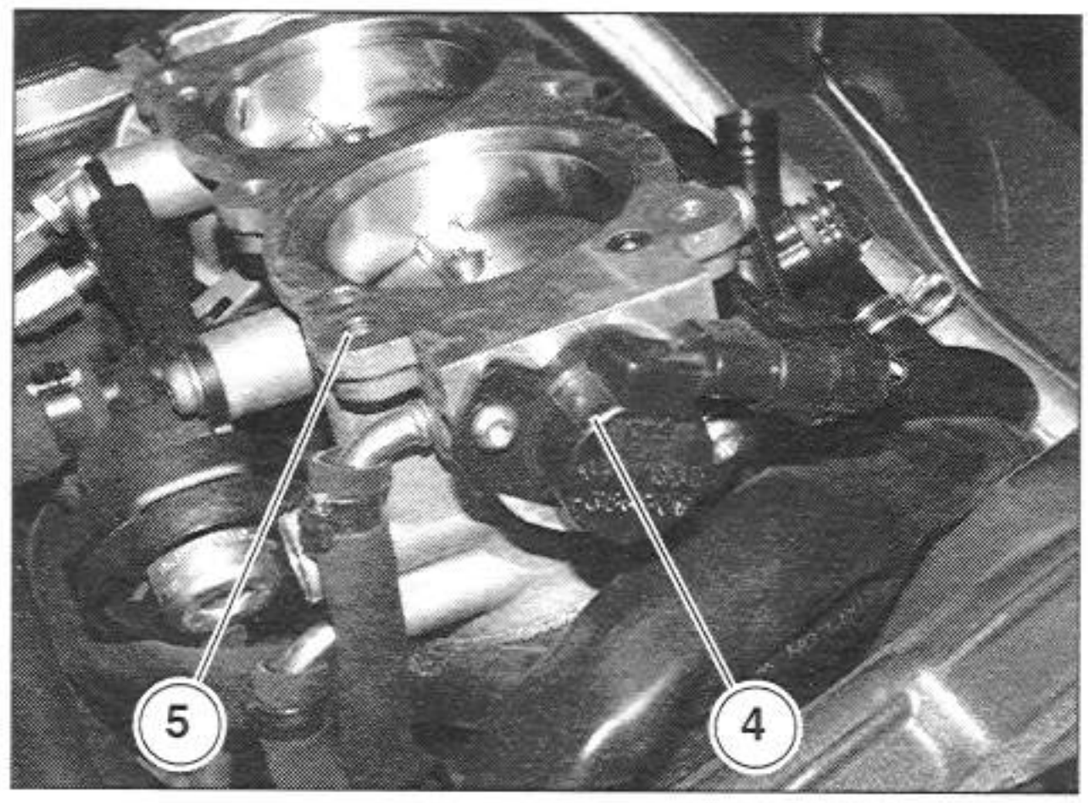

Engine temperature sensor (6)

The engine temperature sensor is a thermistor with a negative temperature coefficient. This means that its resistance decreases as the temperature increases. This sensor is positioned to provide a precise indication of the engine running temperature. The EMS compensates for the various engine operating properties within different engine temperature ranges. For example, a cold engine will need a different amount of fuel for start-up compared to a warm engine.

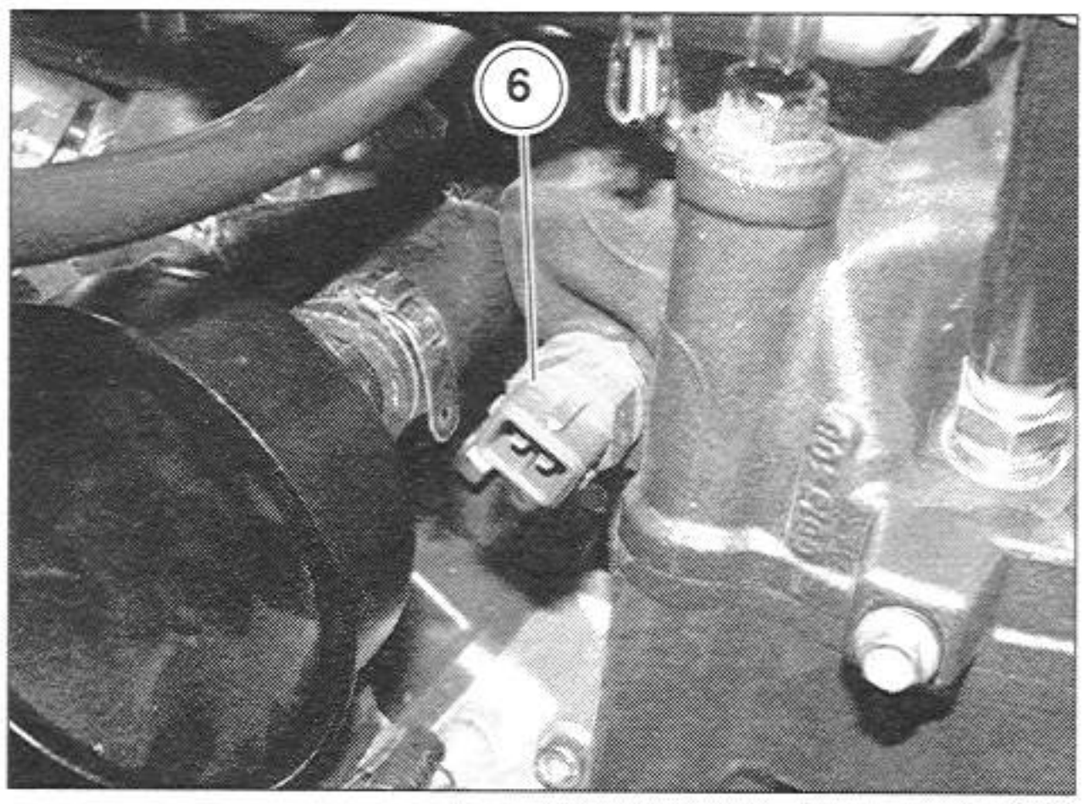

Air temperature sensor
Location: in the left air duct (7).

Air temperature affects the density of the incoming air, thereby altering the actual load on the engine and thus the amount of fuel needed. Compensation is necessary to limit the risk of explosion caused by high air intake temperatures.

7.3 INJECTION, SYSTEM DIAGRAM

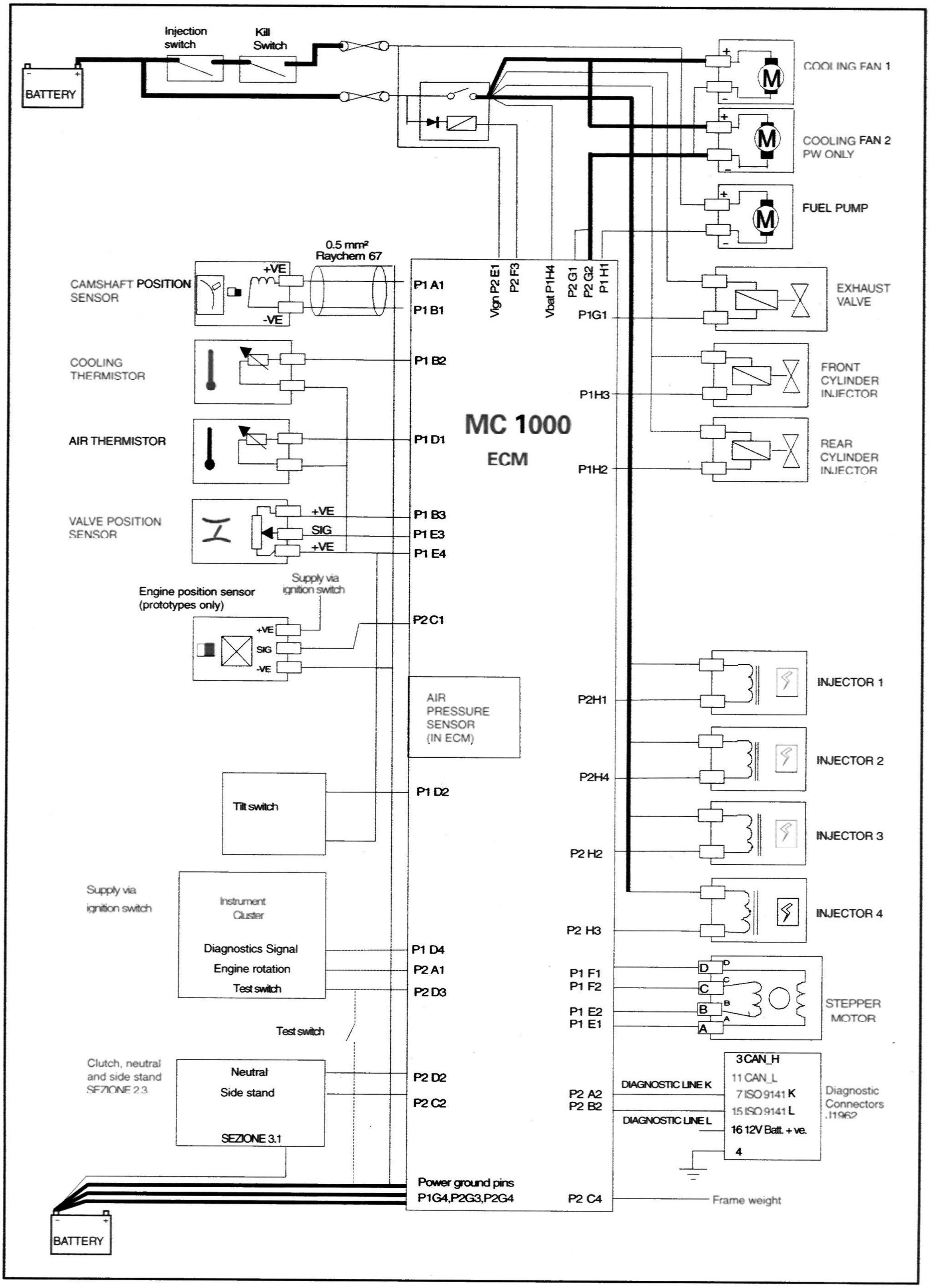

4.7.4 ELECTRONIC CONTROL UNIT

For more information, see 6.6 (CONNECTIONS TO THE ELECTRONIC CONTROL UNIT).

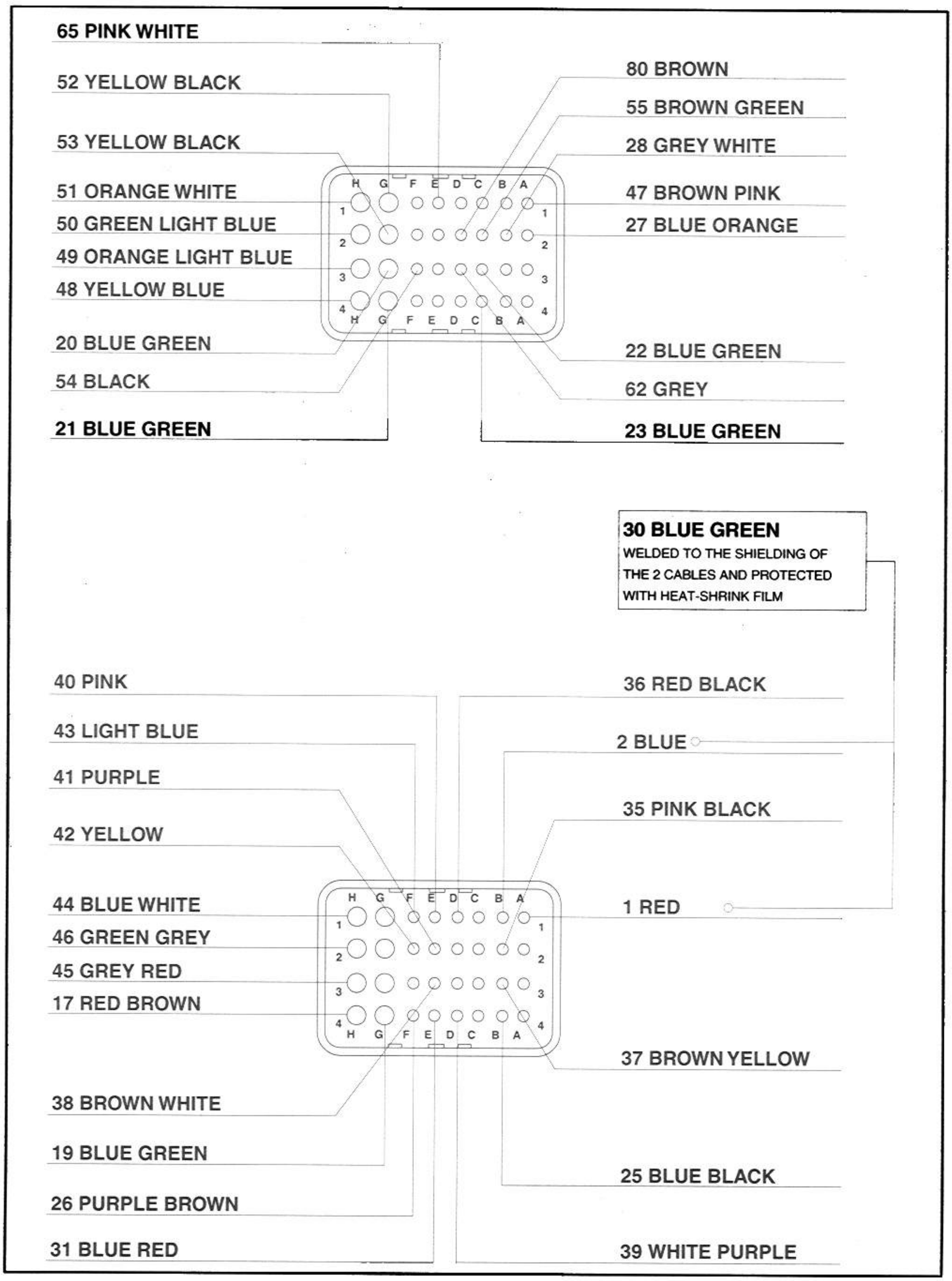

4.7.5 AUTOMATIC TESTING

See 6.5 (IGNITION/INJECTION SYSTEM).

4.7.6 ROUBLESHOOTING IN THE ELECTRONIC SYSTEM USING DISPLAYED INFORMATION

⚠ DANGER

Take care around the high voltage in the ignition system.
Never disconnect the connections with the engine running. Whenever working on the ignition system, unless otherwise indicated, always leave the ignition switch set to "⊗" and the battery disconnected (when disconnecting the battery, disconnect the negative pole "⊗" first).

⚠ WARNING

All measurements should be taken with components at a temperature of 68°F (20°C).
General troubleshooting instructions: as soon as you have identified the fault, remove the defective component.

- If the "EFI" LED comes on while the vehicle is running, it means the control unite has detected a fault.

FAULT CODE TABLE:

Code	Description of fault
12	crankshaft (pick-up) position sensor malfunction
15	throttle position sensor (TPS) malfunction
18	CALIFORNIA ONLY
21	engine temperature sensor malfunction
22	air temperature sensor malfunction
23	barometric pressure sensor malfunction
33	coil 1 malfunction
34	coil 2 malfunction
35	coil 3 malfunction
36	coil 4 malfunction
41	overturn sensor signal malfunction
42	injector 1 malfunction
43	injector 2 malfunction

4.8 THROTTLE BODY

⚠ WARNING

The lever mechanism on the throttle body may not be adjusted nor replaced. In case of malfunction, replace the complete throttle body, see 4.8.1 (REMOVING THE THROTTLE BODY).
The two screws M4x12 (1) attaching the throttle valve potentiometer to the throttle valve body are painted, and may be removed only when replacing the sensor itself.

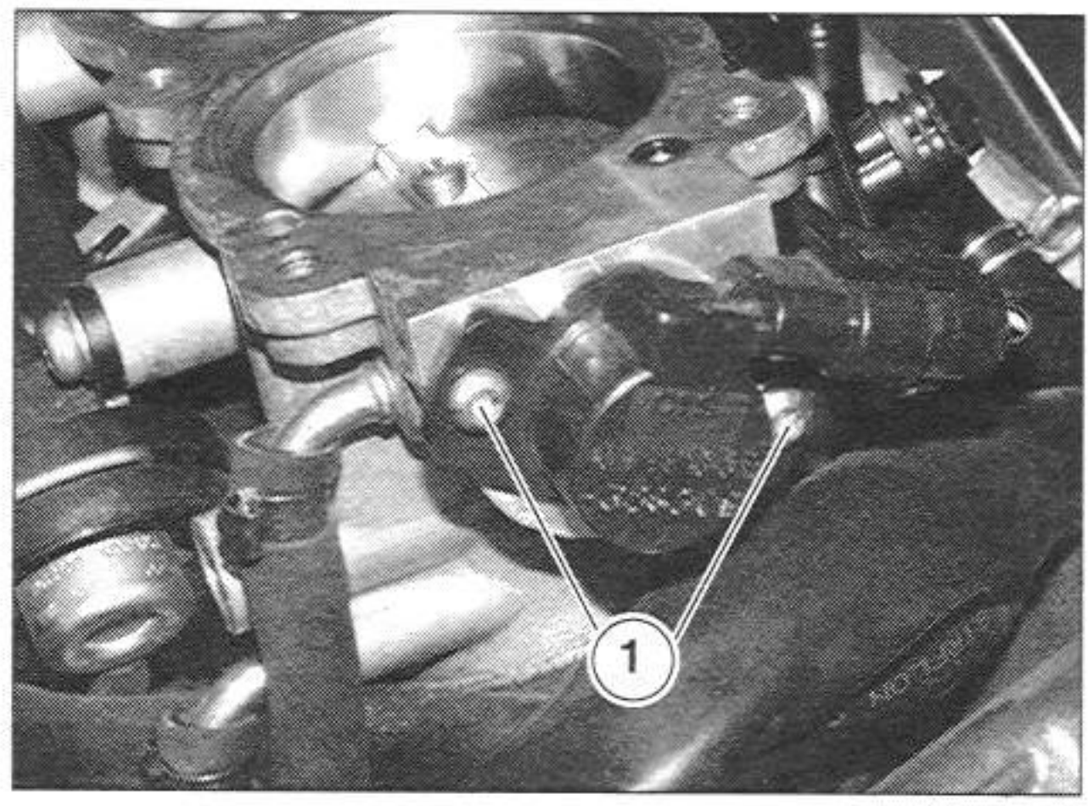

4.8.1 REMOVING THE THROTTLE BODY

Carefully read 1.3.9 (PRECAUTIONS AND GENERAL INFORMATION).

- Partially remove the fuel tank, see 7.1.5 (PARTIALLY REMOVING THE FUEL TANK).
- Remove the air filter case, see 7.1.8 (REMOVING THE AIR FILTER CASE).
- Disconnect the electrical connectors:
- right injector (1);
- left injector (2);
- throttle valve potentiometer (3).

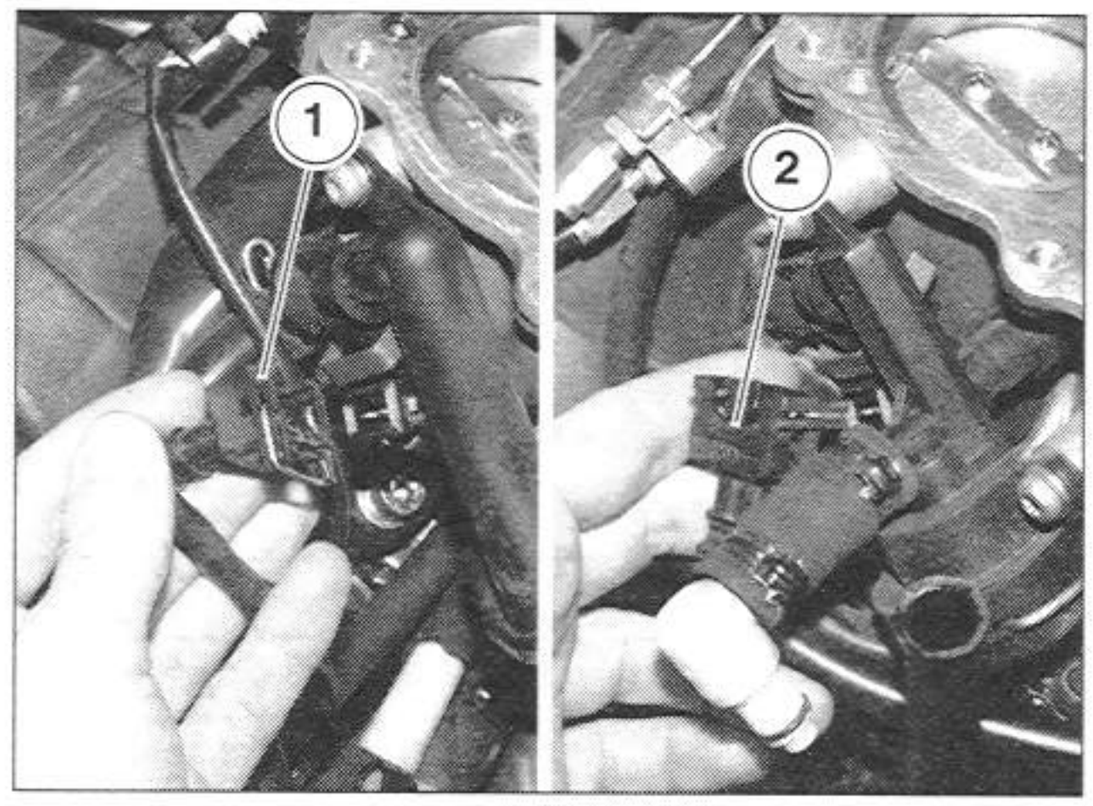

⚠ WARNING

When reassembling, make sure the electrical connectors are properly inserted.

NOTE Use the special click clamp installation pliers (code 0277295); during reassembly, replace each clamp with a new one of the same kind.

- Release the click clamps (4-5).
- Pull the lines (7-8) from the throttle body (6).

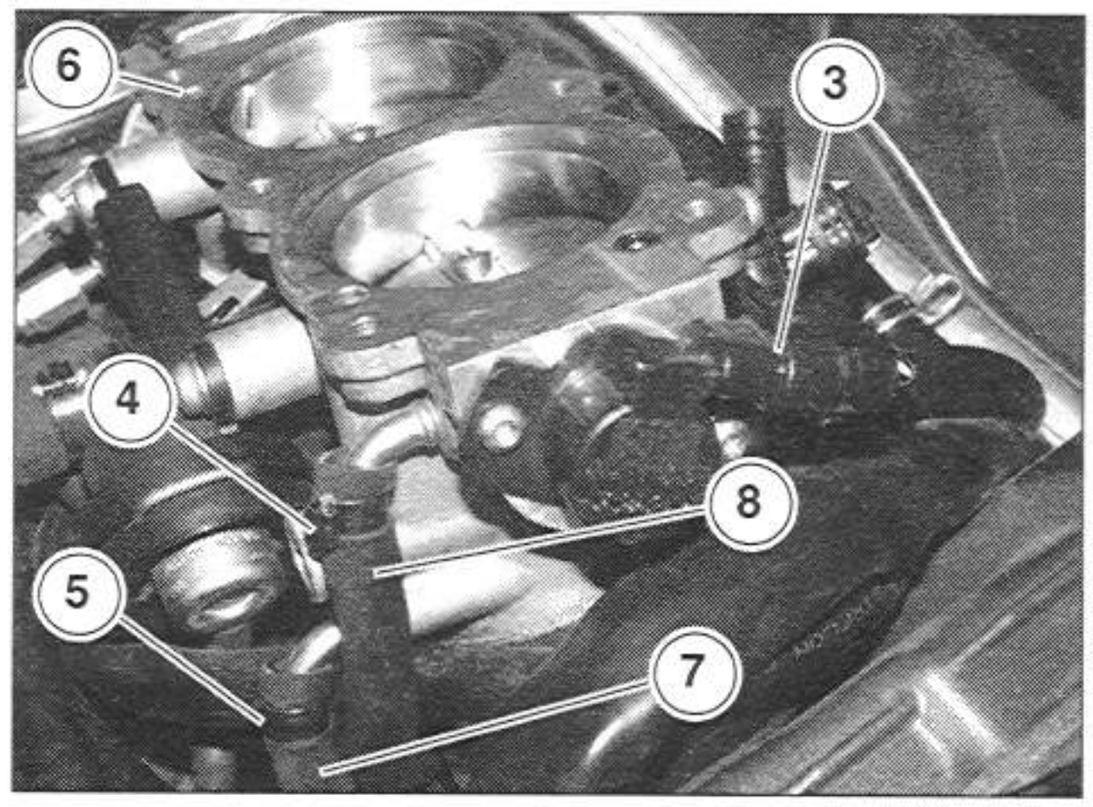

- Disconnect the two throttle cables (9-10).

⚠ WARNING

When reassembling make sure that the two throttle cable adjusters are properly fastened to their respective couplings; check and, where necessary, restore the correct clearance, see 2.11.3 (ADJUSTING THE THROTTLE CONTROL).

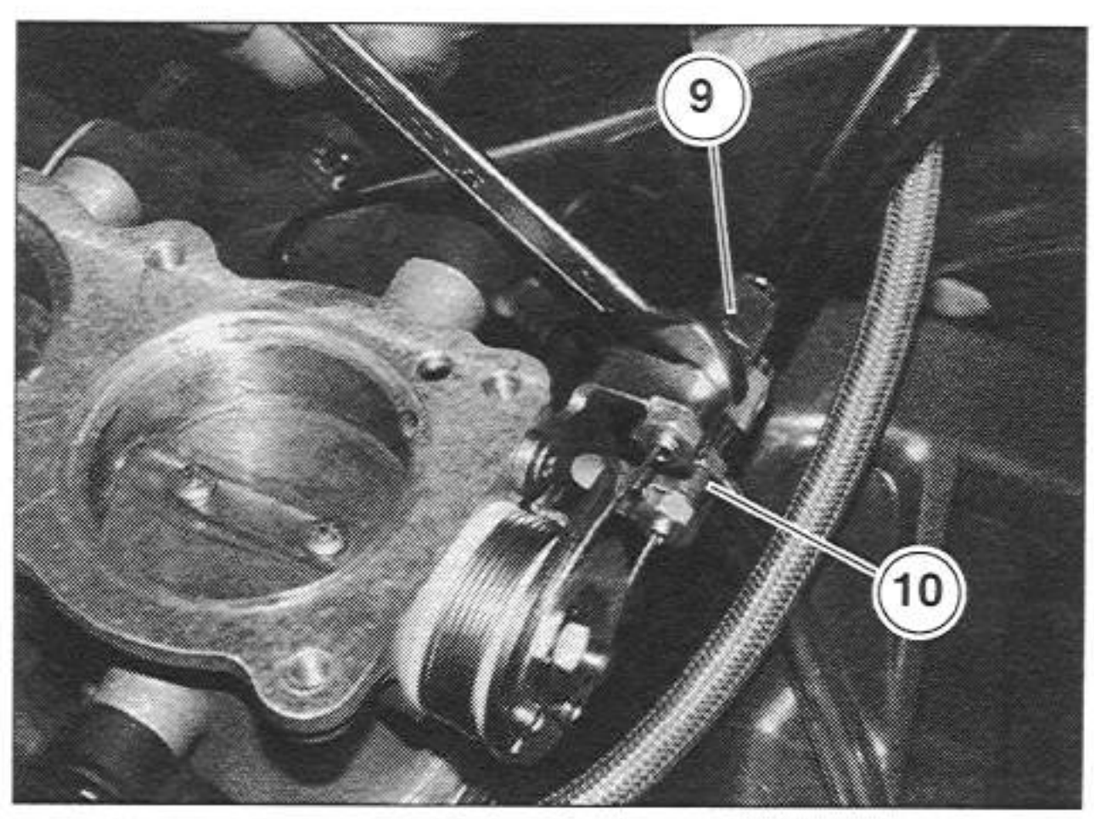

- Remove the pressure regulator hose (11).
- Loosen the two clamps (14-15).

⚠ WARNING

Be extremely careful when removing the throttle body (6), since it remains attached to the fuel tank (13) by means of the fuel hose (12).
Before removing the throttle body, you must thoroughly clean the two intake flanges, to prevent foreign matter from entering the cylinders.

- Firmly grasp the throttle body (6), and gradually wiggle it back and forth while pulling upward, until you are able to slide it off the inlet manifolds.
- Place the complete throttle body assembly (6) and fuel tank (13), still attached together, on a clean surface.
- Plug the inlet manifolds to prevent foreign matter from entering the cylinders.

⚠ WARNING

During reassembly:
- **the fuel delivery line (12) must not be twisted, or placed where it is likely to be pinched by other components; it must be replaced if found to be damaged or deteriorated;**
- **the fuel delivery line (12) must be placed so that it arrives on the right-hand side of the throttle body (6), passing under the body between the two intake flanges;**
- **the throttle body (6) must be fitted perfectly on the intake flanges;**
- **the clamps (14-15) must be properly tightened.**

When replacing the throttle body (6), you must align the throttle valve position sensor, see 4.10.6 (ALIGNING THE THROTTLE VALVE POSITION SENSOR).

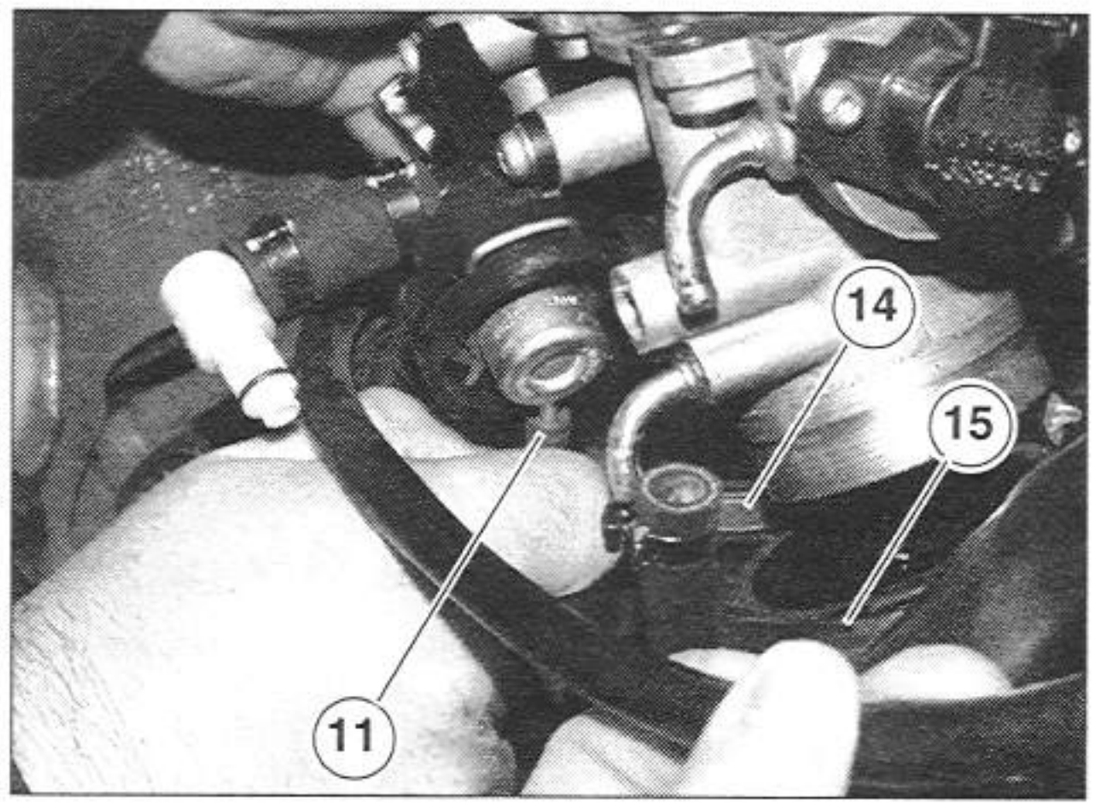

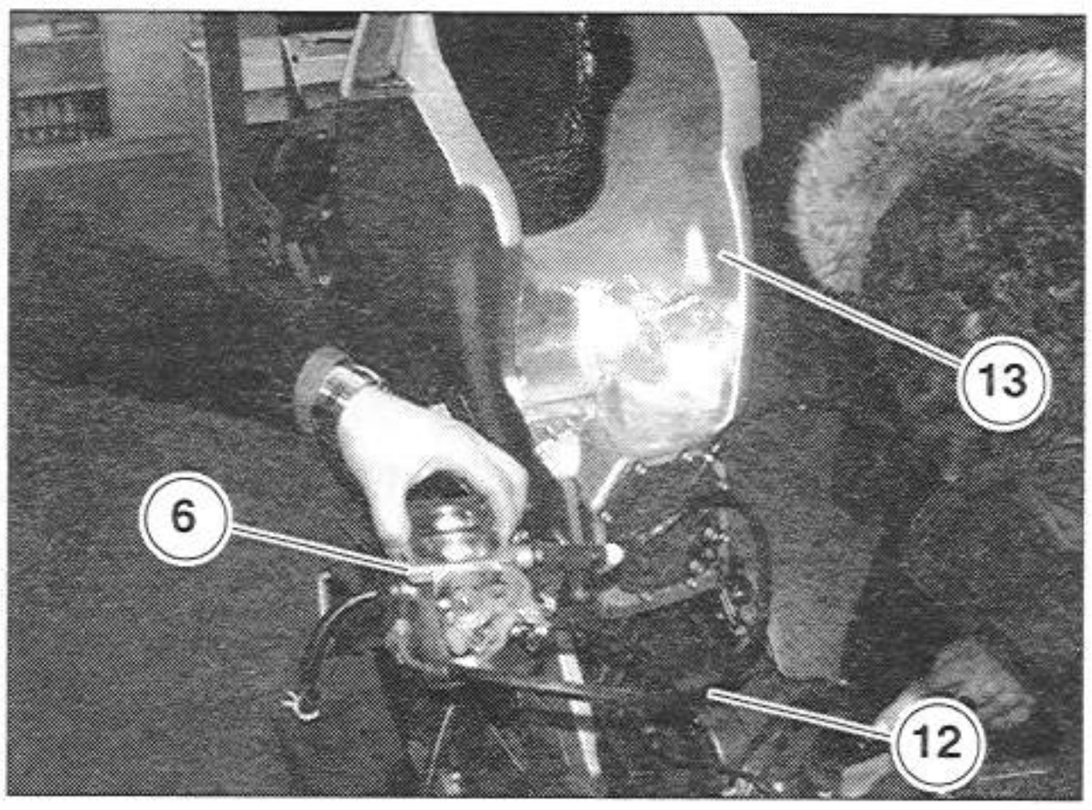

4.8.2 REMOVING THE INJECTORS

See 4.8.1 (REMOVING THE THROTTLE BODY).
To check, see 6.6.1 (CHECKING THE INJECTORS).

4.9 DISASSEMBLING THE THROTTLE BODY

Carefully read 1.3.9 (PRECAUTIONS AND GENERAL INFORMATION).

- Empty all fuel from the tank, see 2.9 (DRAINING FUEL FROM THE TANK).
- Remove the complete throttle body, see 4.8.1 (REMOVING THE THROTTLE BODY).
- Unscrew and remove the two screws (1).

Tightening torque for screws (1): 2.6 ftlb (3.5 Nm).

- Remove the fuel pressure regulator (2) complete with O-ring (3), left injector (4) and O-ring (5).
- Unscrew and remove the two screws (6).

Tightening torque for screws (6): 26 ftlb (3.5 Nm).

- Remove the fuel line (7) complete with O-ring (8), right injector (9), and O-ring (10).

- Unscrew and remove the two screws (11).

Tightening torque for screws (11): 0.8 ftlb (1.2 Nm).

- Remove the potentiometer (12).

NOTE Replace all seals during reassembly. These components are supplied in the repair kit.

⚠ WARNING

The lever mechanism of the throttle body cannot be disassembled or adjusted. If you encounter any problems, replace the entire throttle body, see 4.8.1 (REMOVING THE THROTTLE BODY).

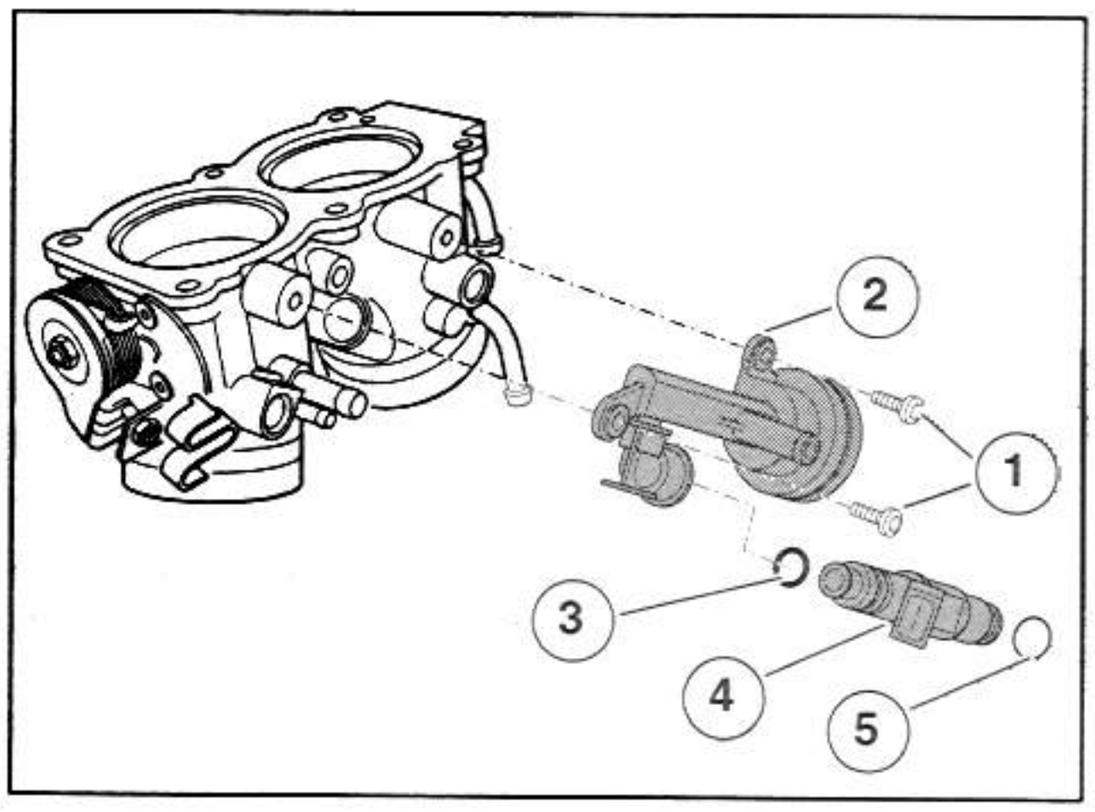

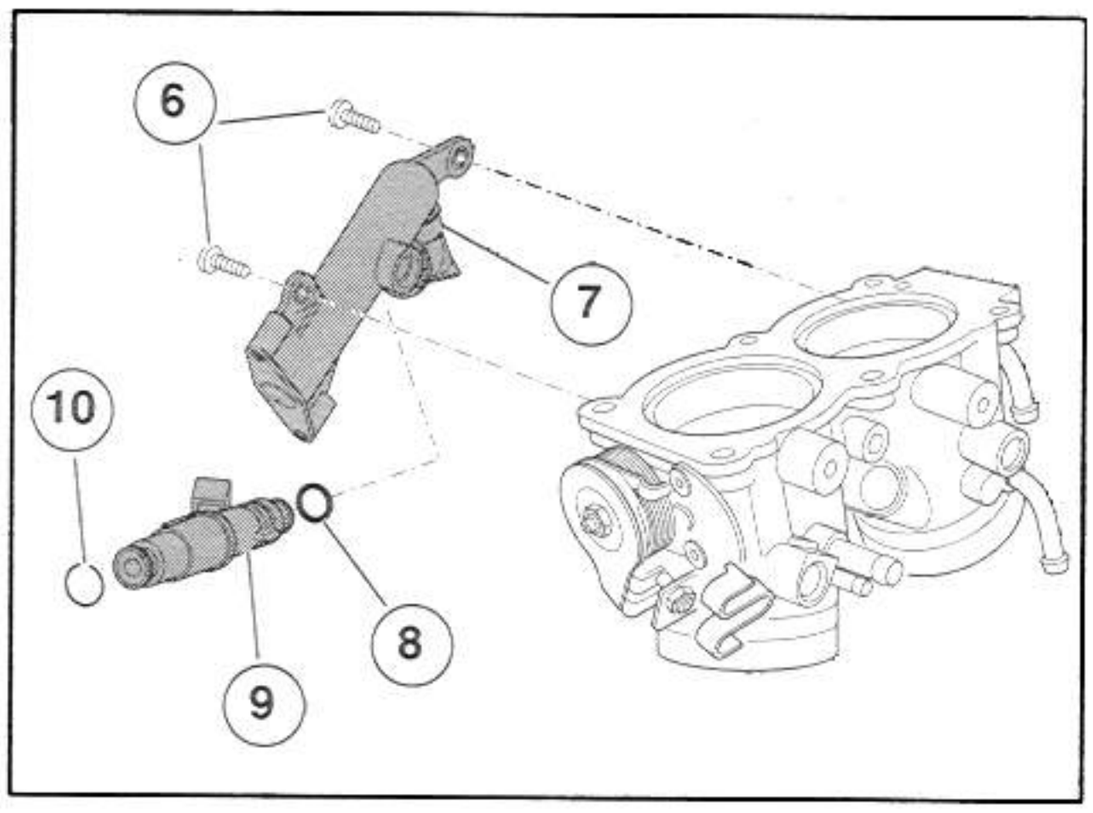

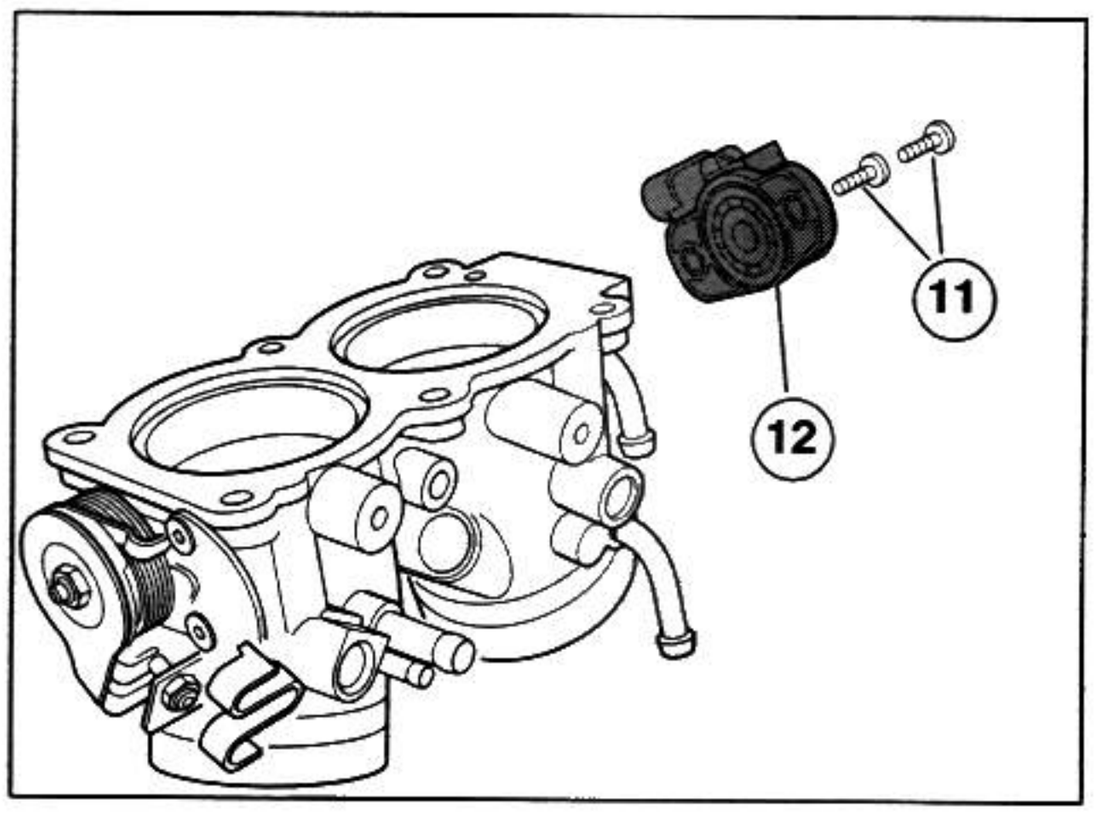

4.10 INSPECTING THE THROTTLE BODY

4.10.1 TESTING THE INJECTORS

⚠ DANGER

Gasoline is extremely flammable and becomes explosive under certain conditions.

KEEP GASOLINE AWAY FROM CHILDREN.

NOTE The injectors may be tested even when mounted.

Check the following components:
- electrical cables and connections;
- injector or injection signal of the electronic control unit, see 6.5 (IGNITION/INJECTION SYSTEM).

Checking injector resistance:
See 6.6.1 (CHECKING THE INJECTORS).

4.10.2 THROTTLE BODY

⚠ WARNING

Use only neutral cleansers.
Use only proprietary gasket removers, degreasers or cleansers that do not require heating.

- Clean all openings and passages in the throttle body with compressed air.

4.10.3 THROTTLE VALVE POTENTIOMETER

⚠ WARNING

The two HS bolts fastening the throttle valve potentiometer (1) are painted over during the manufacturing process, and cannot be loosened. The throttle valve potentiometer may be adjusted only when being replaced.

- Place the throttle valve position sensor (1) horizontally on the throttle valve shaft, and turn it downward.

NOTE Apply LOCTITE® 243 on the thread of the bolts (2).

- Tighten the two hex bolts M410x12 (2).

Tightening torque for bolts (2): 2.6 ftlb (3.5 Nm).

- TTo line up the throttle position sensor (1), see 4.10.6 (ALIGNING THE THROTTLE VALVE POSITION SENSOR).

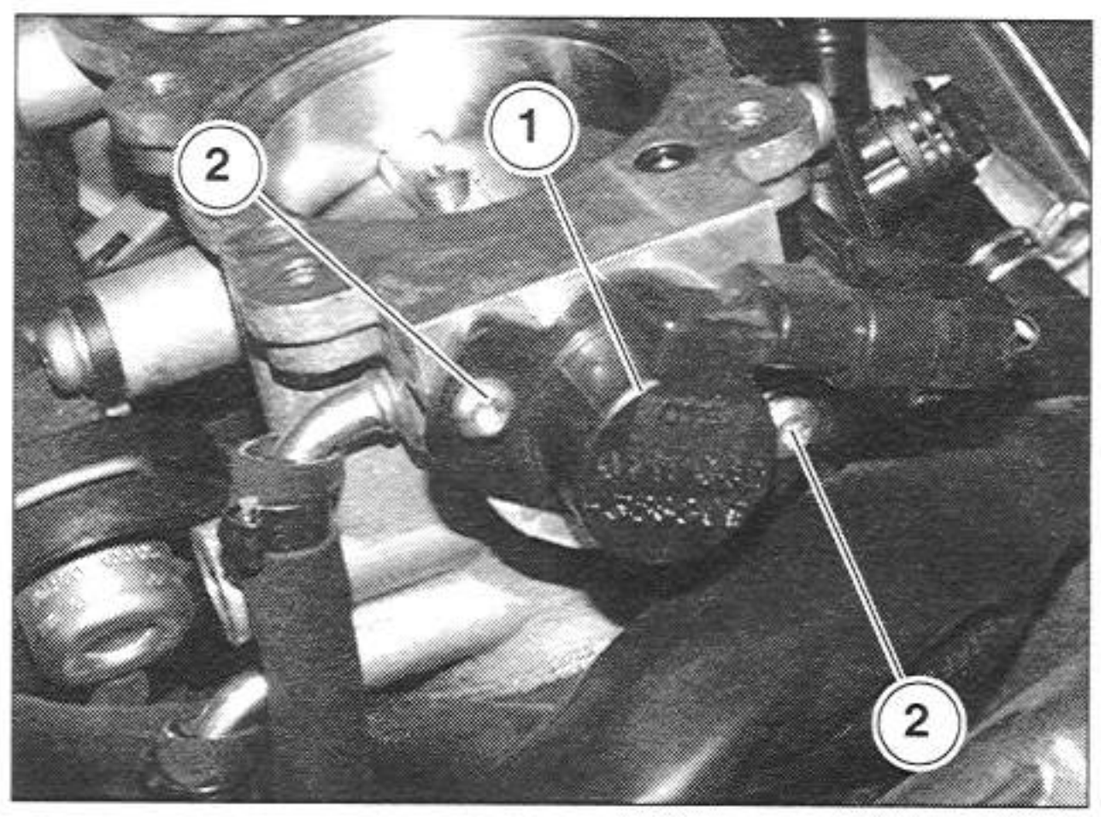

4.10.4 SYNCHRONIZING THE CYLINDERS

Carefully read 1.3.9 (PRECAUTIONS AND GENERAL INFORMATION), see 1.4.1 (FUEL).

The cylinders need to be synchronized when the engine no longer idles smoothly. The cylinders must be synchronized before adjusting the CO, see 4.10.5 (ADJUSTING THE CO).

- Ride a few miles until the engine reaches normal running temperature.

⚠ WARNING

The cylinders must be synchronized when the engine is warm:

- coolant temperature 167-194 °F (75-90 °C);
- ambient temperature 68-86 °F (20-30 °C).

NOTE Have the vacuum gauge (1) ready OPT (code 8140256).

⚠ DANGER

Gasoline fumes are harmful to your health.
Before proceeding, make sure that the work area has adequate ventilation.
Do not inhale the fuel fumes.
Avoid skin contact with the gasoline.
Do not smoke or use open flames.
Always dispose of fuel in compliance with environmental regulations.

- Raise the fuel tank, see 2.8 (LIFTING THE FUEL TANK).
- Pull out the two free tubes (2) on the left side of the motorcycle, under the side panel.
- Unplug the two free transparent lines (2) and connect them to those of the vacuum gauge (1), using two 6-mm fittings.
- Completely close the two by-pass screws (3) on the throttle body.
- Start the vehicle and read the value for the front cylinder on the vacuum gauge (1), with valve (4) open and valve (5) closed.
- Close the valve (4) and open the valve (5) on the vacuum gauge (1), and read the pressure value for the rear cylinder.
- If the values are different between the two cylinders, adjust one or both of the by-pass screws (3) to synchronize.
- Loosen the by-pass screw (3) on the cylinder with the higher pressure, until it falls to the same level as the other cylinder, with a tolerance of ± 5 millibar.

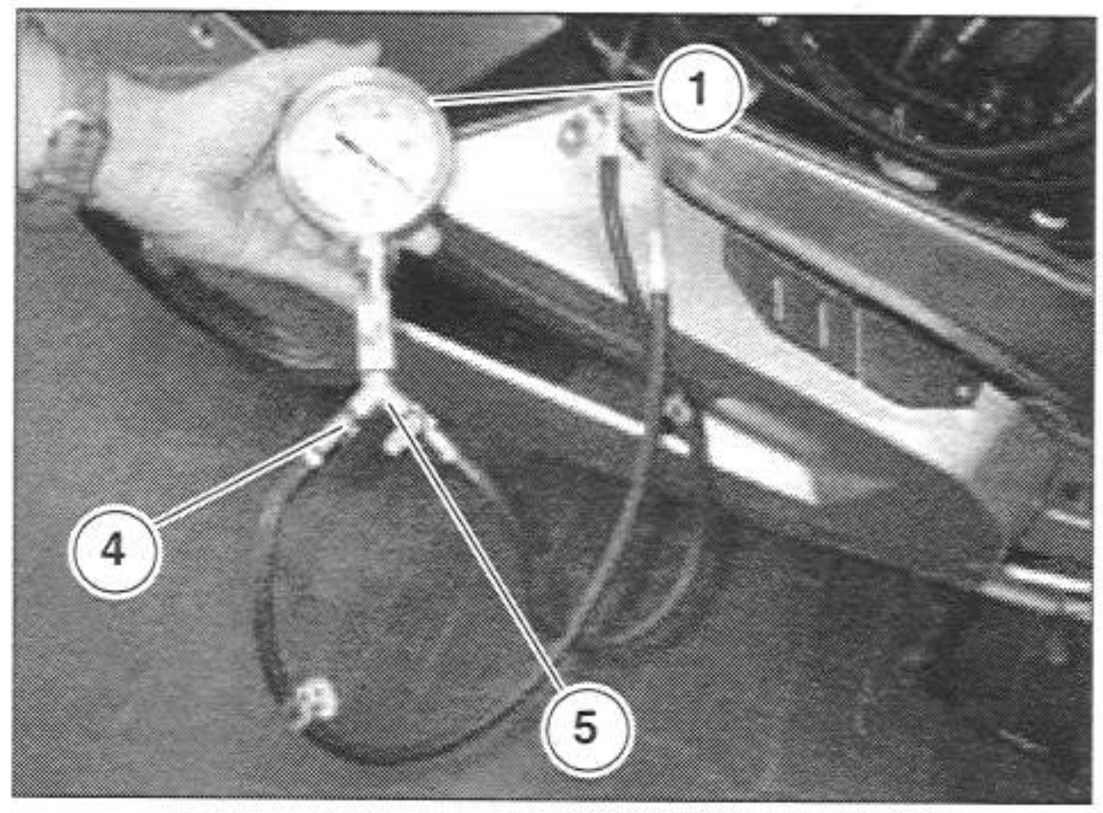

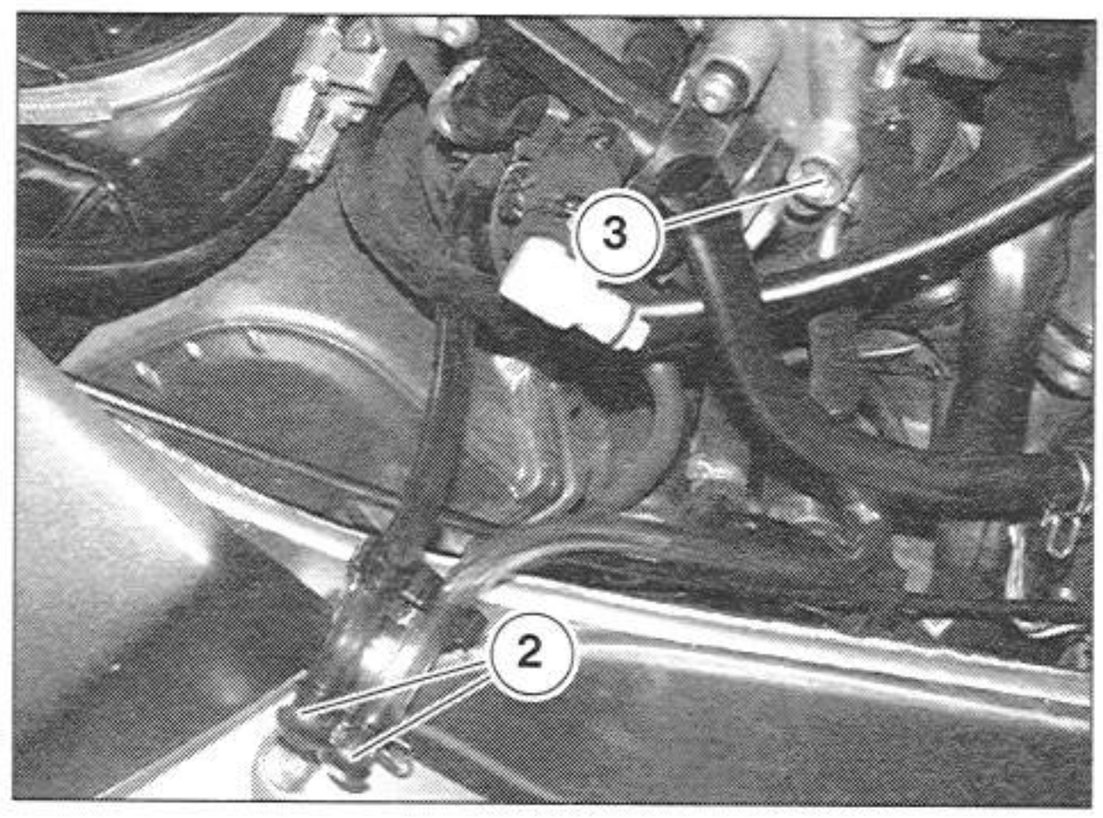

4.10.5 ADJUSTING THE CO

- Remove the radiator spoiler, see 7.1.35 (REMOVING THE RADIATOR SPOILER).

⚠ WARNING

The CO must be adjusted when the engine is warm.

- Coolant temperature 167-194 °F (75-90 °C).

NOTE Have the following special tools OPT ready:
- exhaust gas analyzer (1) (code 8140196);
- tubing kit for exhaust gas analyzer (2) (code 8140202).
- Axone 2000 (5) (code 8140595).

⚠ DANGER

Gasoline fumes are harmful to your health.
Before proceeding, make sure that the work area has adequate ventilation.
Do not inhale the fuel fumes.
Avoid skin contact with the gasoline.
Do not smoke or use open flames.
Always dispose of fuel in compliance with environmental regulations.

- Unscrew and remove the two plugs (3-4) from the front and rear exhaust pipes.

NOTE When reassembling apply LOCTITE® 8150 to the threads of plugs (3-4).

- Connect the tubing kit for exhaust gas analyzer (2):
- connect the two rigid tubes to the appropriate exhaust tube outlets;
- connect the other tube to the exhaust gas analyzer (1).
- Make sure that the idle speed is 1250 ± 100 rpm. If not, adjust as needed, see 2.11.2 (ADJUSTING THE IDLE SPEED).
- Check the tester (1) for the CO values, which should match those indicated and be the same for both cylinders.

CO values for both cylinders:
- 1.5 - 2% at 1250 ± 100 rpm.

CO values for both cylinders USA :
- 1 - 1.5% at 1250 ± 100 rpm.

- Insert the "OBD" module (7) in the Axone 2000.
- Remove the saddle, see 7.1.1 (REMOVING THE SADDLE).
- Connect the Axone 2000 (5) via the connector (6) under the saddle, and power the Axone 2000 (5) using the vehicle battery.
- Start the procedure from the rear cylinder.
- Use the red on/off button to switch on the Axone 2000 (5).
- Select the Autotest icon on the display and press the enter key.
- The next screen shows a series of data regarding the various control unit parameters.
- Press the + or – key, then use the UP and DOWN arrows to select the item "Idle fuelling adjustment", and press enter.

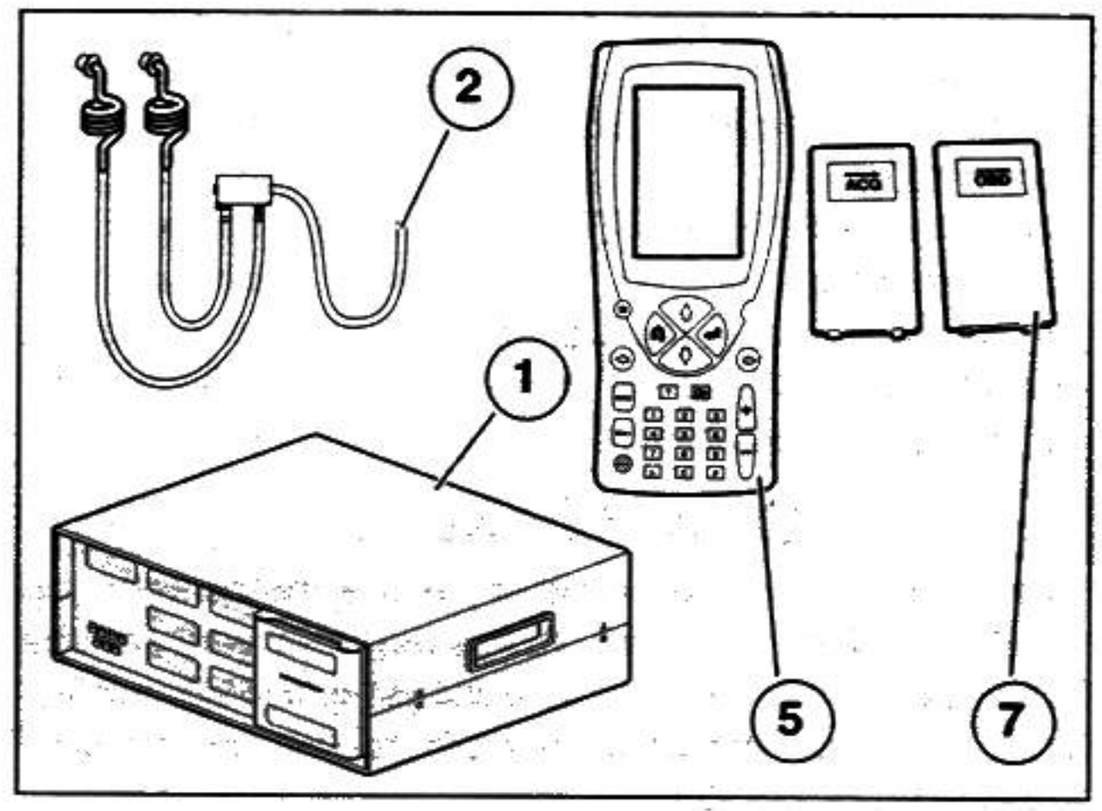

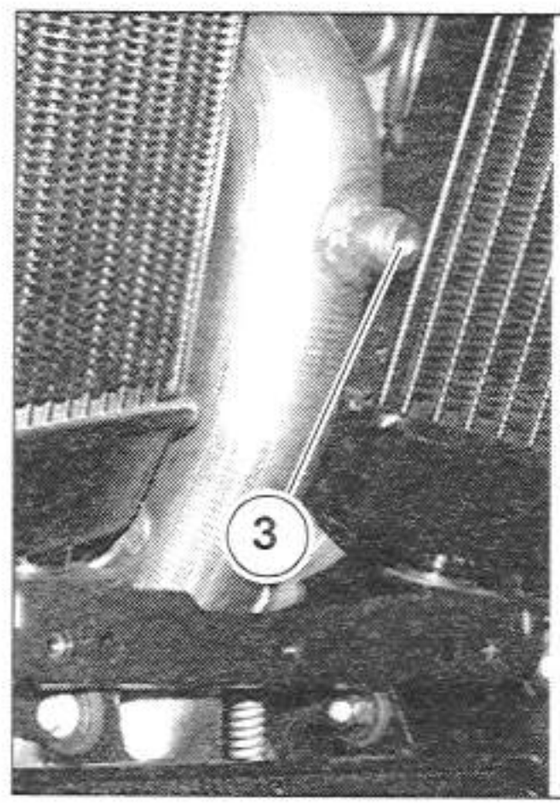

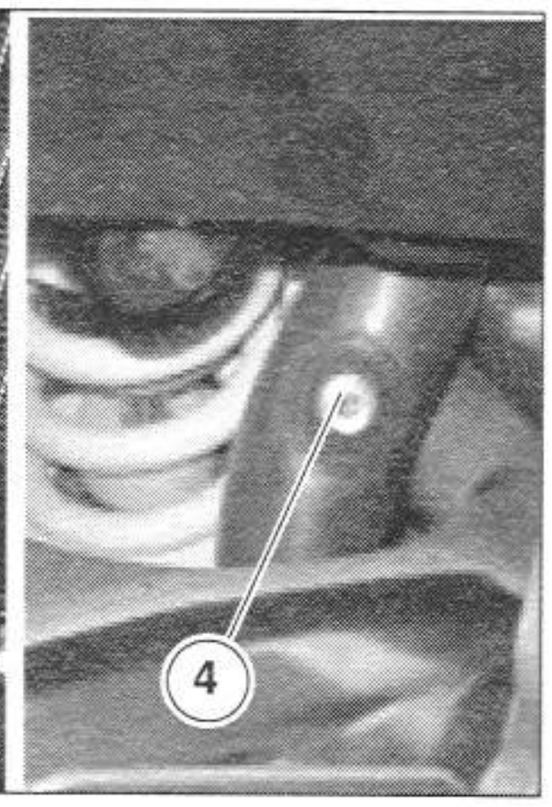

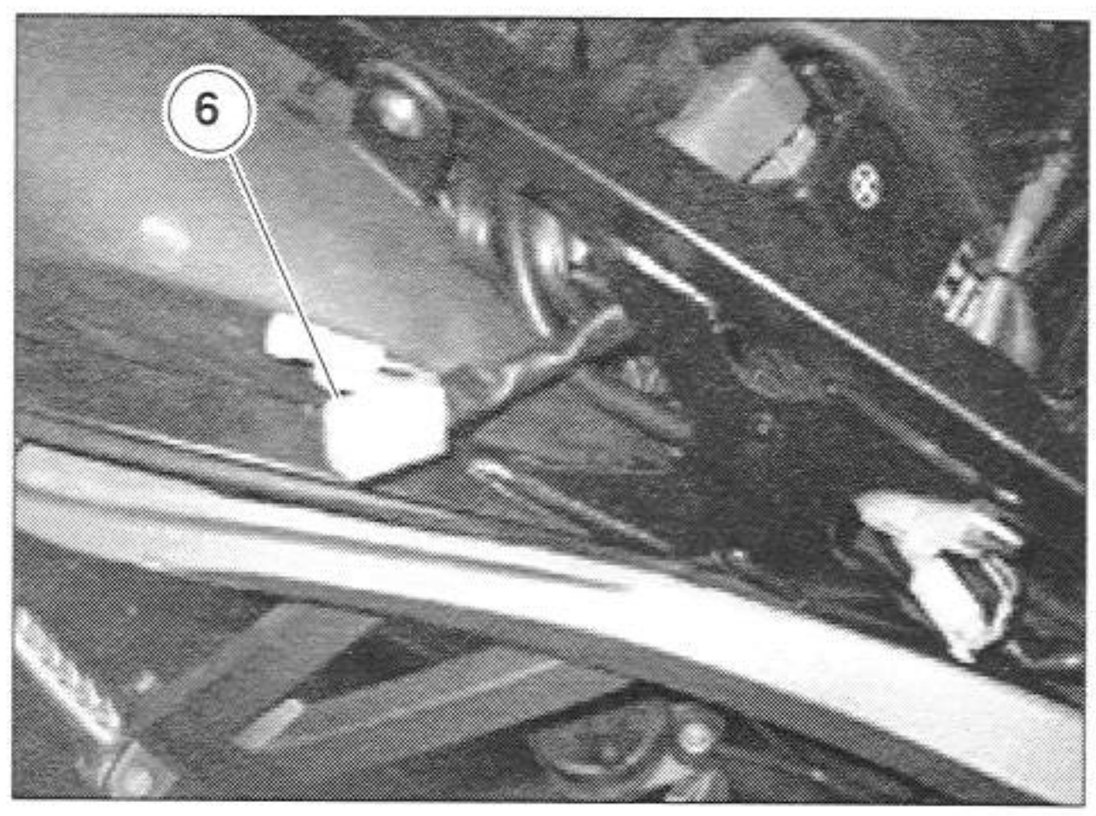

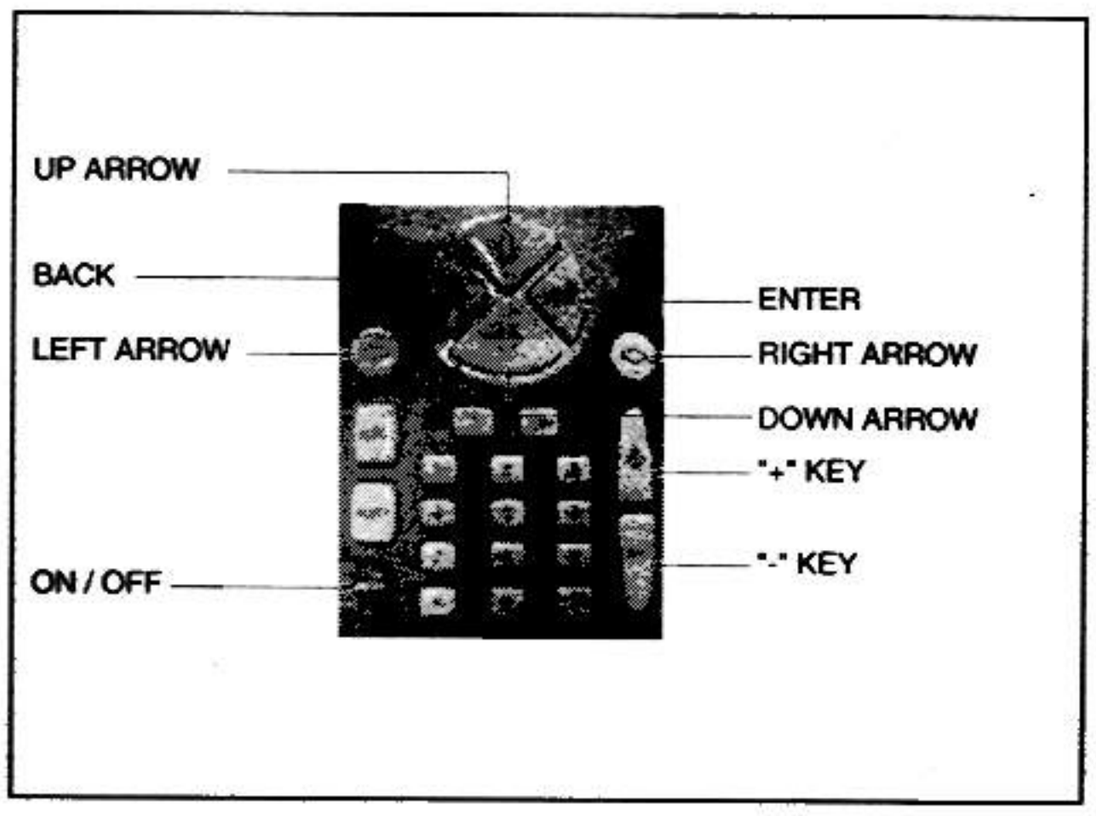

- A parameter appears at the top of the display in percentage form, which should not be compared to the CO value reading provided by the exhaust gas analyzer (1).
- Use the UP and DOWN arrows to change the instrument parameter: if the value increases, the injection time also increases, providing a richer blend and thus increasing the value of CO; vice-versa, if the parameter is reduced, the CO value falls.

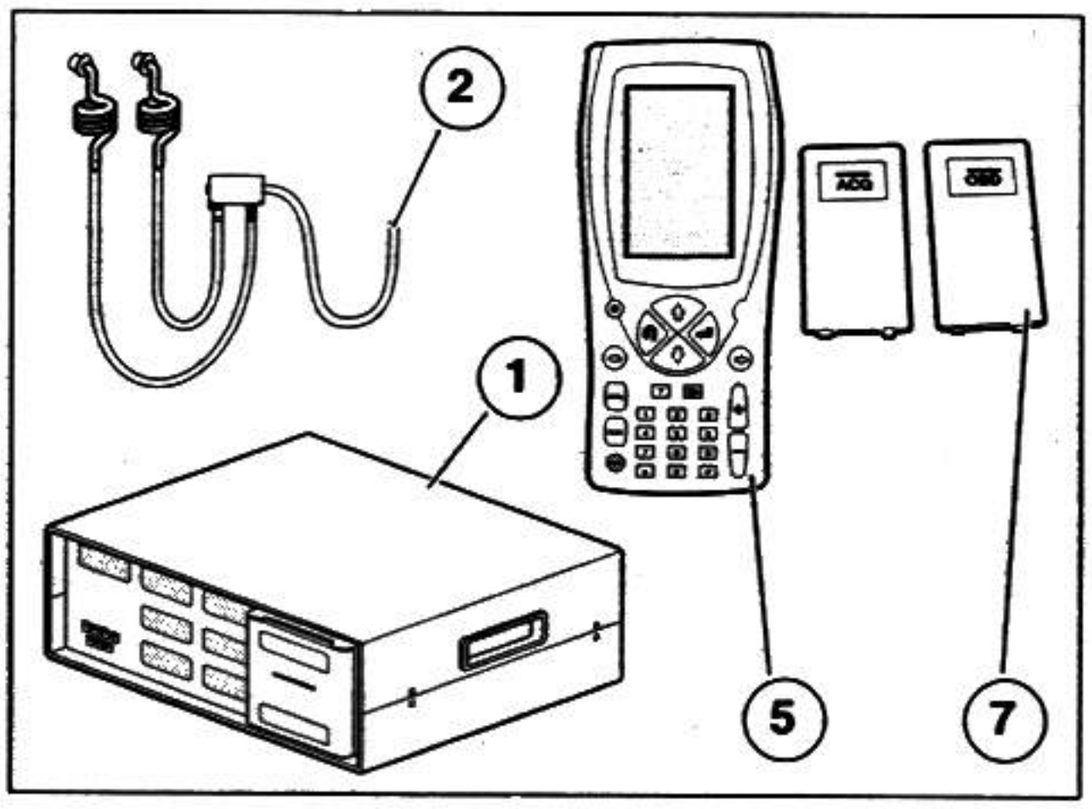

⚠ WARNING

Slowly change the parameter on the instrument (no more than 2 or 3 pulses at a time), and wait for the CO value to stabilize on the exhaust gas analyzer (1). Use the vehicle exhaust/tester (2) connection lines of suitable length (2'-3').
Check the CO on both exhausts, and make sure that the maximum difference is no greater than 1%.

NOTE If you are unable to obtain the prescribed CO values, replace the spark plugs, see 2.7 (SPARK PLUGS).

4.10.6 ALIGNING THE THROTTLE VALVE POSITION SENSOR

- Remove the saddle, see 7.1.1 (REMOVING THE SADDLE).
- Connect the Axone 2000 (1) OPT via the connector (2) under the saddle, and power the Axone 2000 (1) using the vehicle battery.
- Start the vehicle.
- Use the red on/off button to switch on the Axone 2000 (1).
- Select the Autotest icon on the display and press the enter key.
- The next screen shows a series of data regarding the various control unit parameters.
- Press the "+" or "–" key, then use the UP and DOWN arrows to select the item "Closed Throttle Position", and press enter.
- A throttle valve alignment reference parameter appears at the top of the display; use the UP arrow to increase the value of the parameter until it stabilizes, at which point the control unit acknowledges a stable idle condition and enters the adaptive phase.
- Press the enter key and exit the procedure.

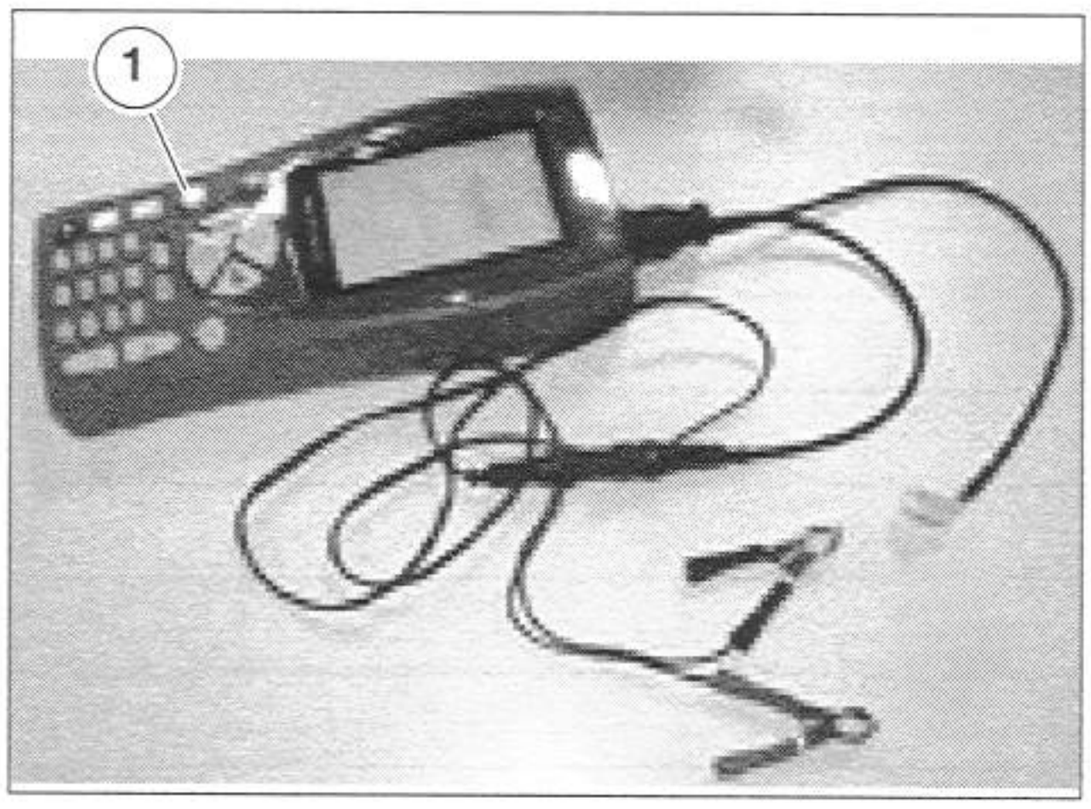

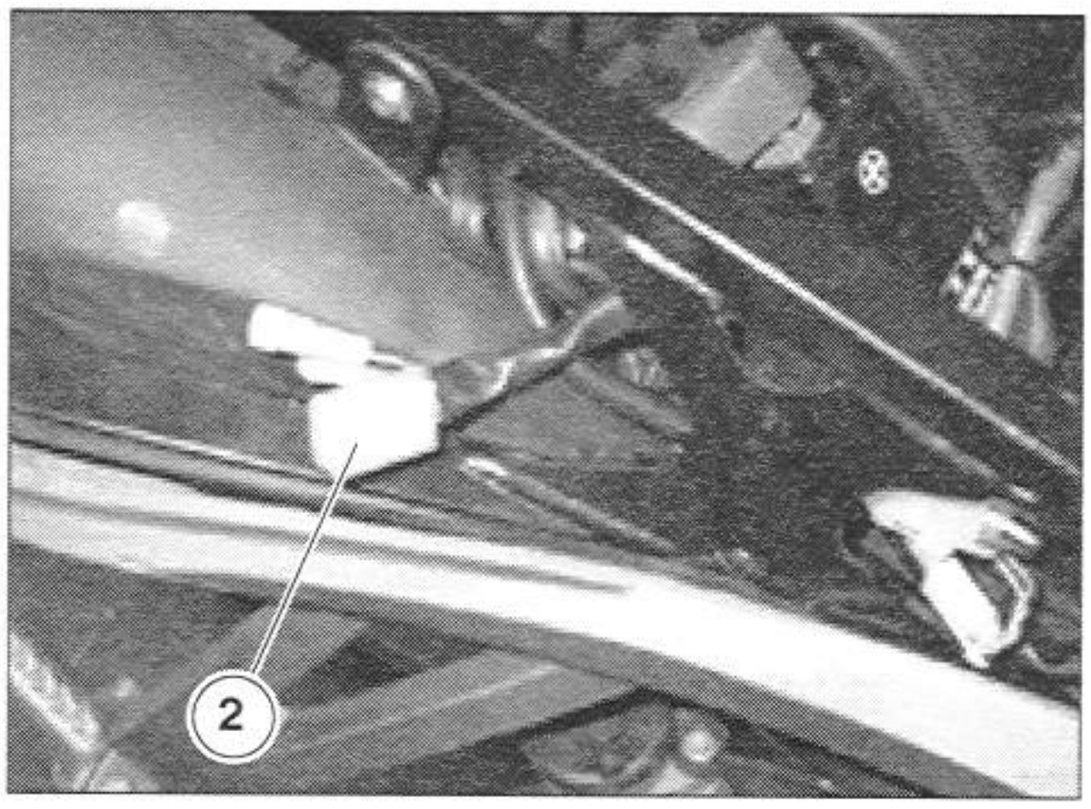

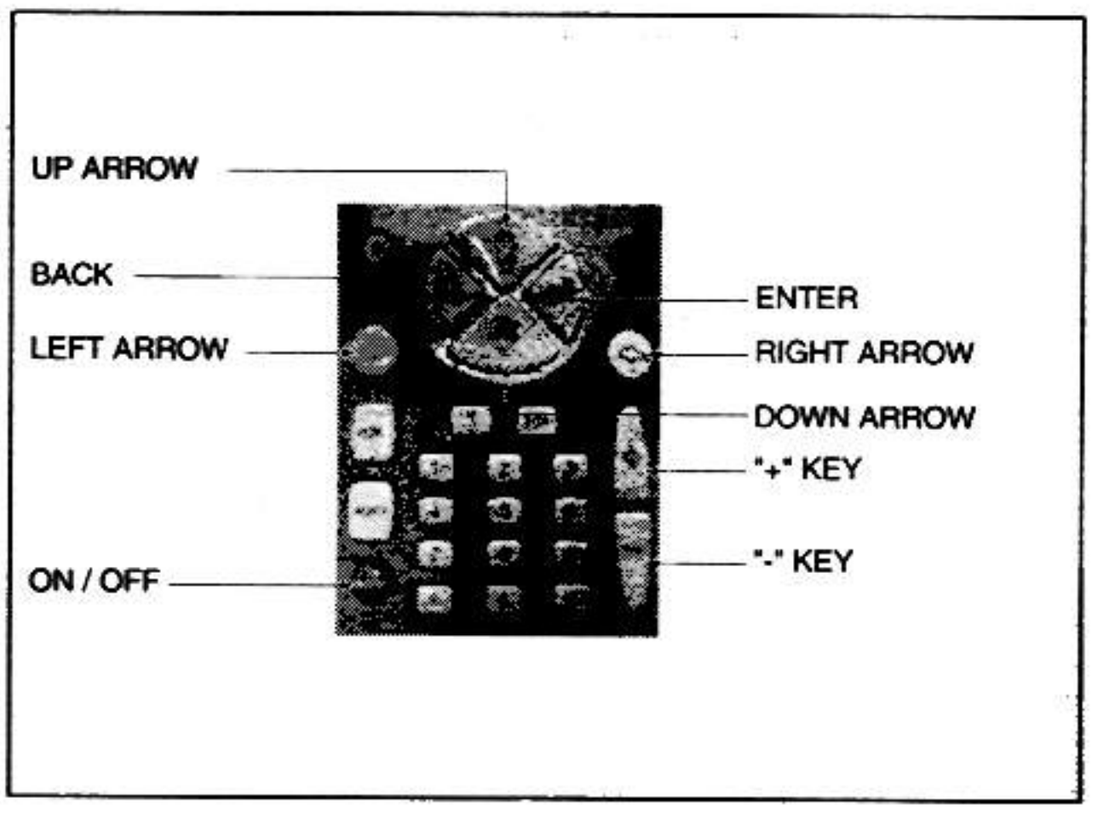

NOTES

COOLING SYSTEM

5

COOLING SYSTEM

TABLE OF CONTENTS

5.1 DESCRIPTION 5-3-00
5.2 REMOVING THE RADIATORS 5-5-00
5.3 REMOVING THE ELECTRIC COOLING FANS 5-6-00
5.4 REMOVING THE COOLANT THERMISTORS 5-7-00
5.5 REMOVING THE THERMOSTAT 5-8-00
5.6 REMOVING THE FILLER NECK 5-8-00
5.7 REMOVING THE THREE-WAY MANIFOLD 5-9-00
5.8 REMOVING THE EXPANSION TANK. 5-9-00

5.1 DESCRIPTION

The centrifugal coolant pump, which is positioned inside of and driven by the engine, draws cooled coolant from the radiators, and distributes it throughout the various cooling galleries in the cylinders and heads to maintain the engine and its internal parts at the proper temperature.
The path of the coolant leaving the engine varies, depending on coolant temperature, and is illustrated below.

The expanded volume of coolant, caused by the increase in temperature, is compensated for by the expansion tank.
Refer to the "LOW" and "FULL" reference marks to check and top up the coolant, see 2.14 (CHECKING AND TOPPING UP THE COOLANT). For more information about coolant, see 1.3.7 (COOLANT).

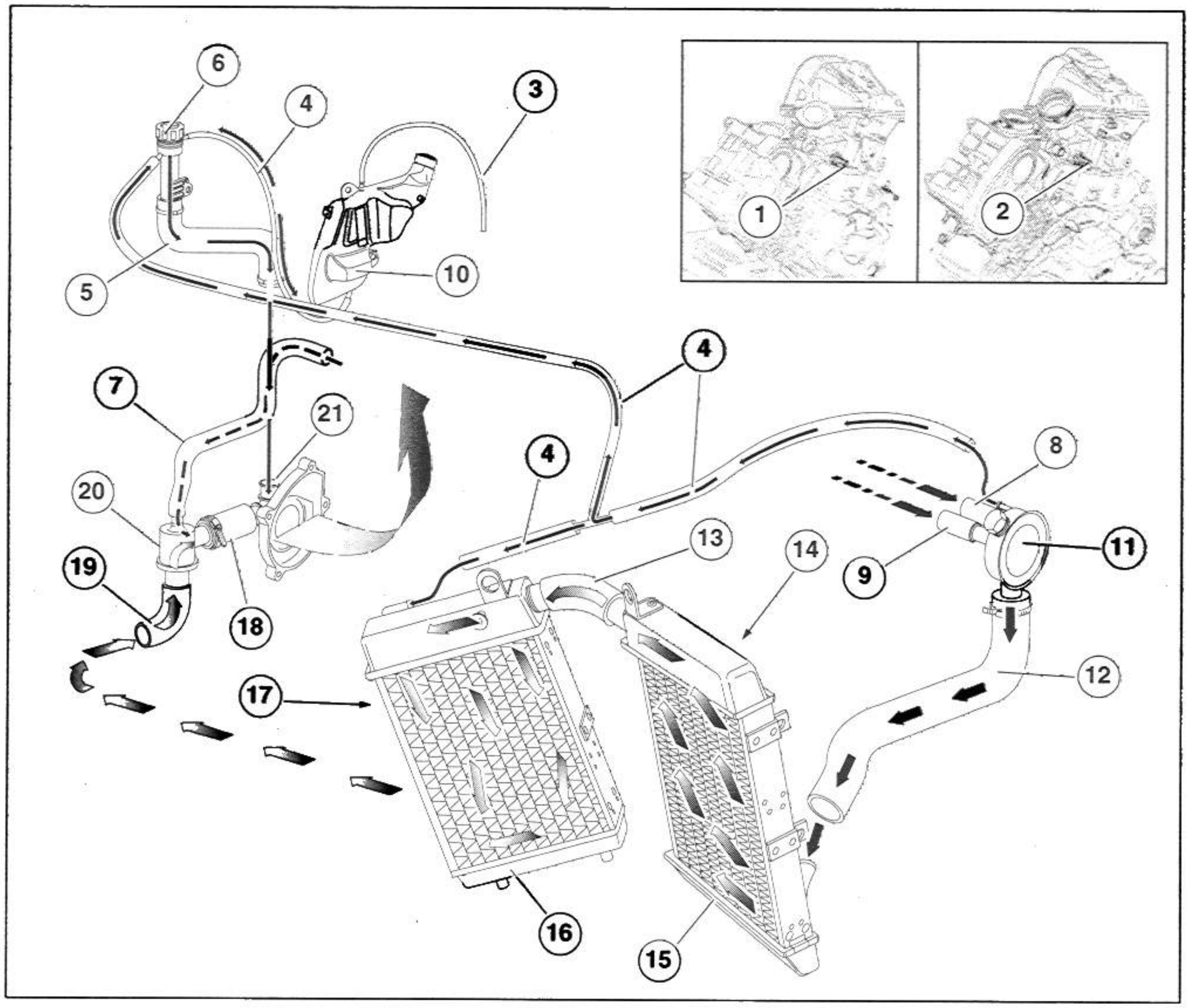

Legend

1) Front cylinder thermistor
2) Rear cylinder thermistor
3) Breather tube
4) Compensation tubes
5) Filler hose
6) Filler neck
7) Engine hose (right side) - thermostat
8) Rear cylinder hose - three-way manifold
9) Front cylinder hose - three-way manifold
10) Expansion tank
11) Three-way manifold
12) Three-way manifold - left radiator coupling
13) Radiator union coupling
14) Left electric radiator fan
15) Left radiator (vertical flow)
16) Right radiator (vertical flow)
17) Right electric radiator fan
18) Thermostat-pump coupling
19) Right radiator-thermostat coupling
20) Three-way thermostat (pad type, of heat-sensitive wax)
21) Centrifugal pump

- — — → = Flow direction with thermostat open

——→ = Flow direction with thermostat closed.

Path with coolant temperature below 167 °F (75°C).

From the pump, coolant enters the engine (temperature taken by thermistors and shown on the right-hand dashboard display). Coolant leaves the engine (right-hand side) to the thermostat (completely closed), and back to the pump.

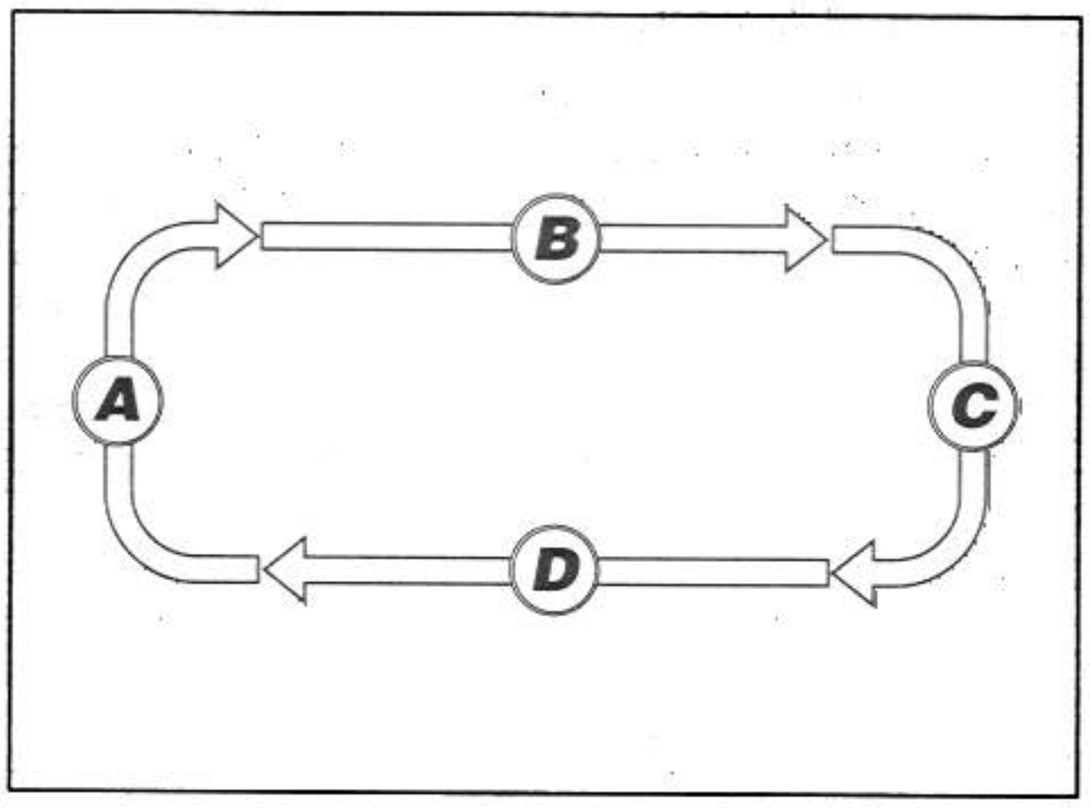

Path with coolant temperature between 167 °F (75°C) and 176 °F (80°C).

From the pump, coolant enters engine (temperature taken by thermistors and shown on the right-hand dashboard display). Simultaneously, coolant leaves the engine (right-hand side) and flows directly to the thermostat; to the left radiator three-way manifold; and to the right radiator thermostat (gradually opening), then back to the pump.

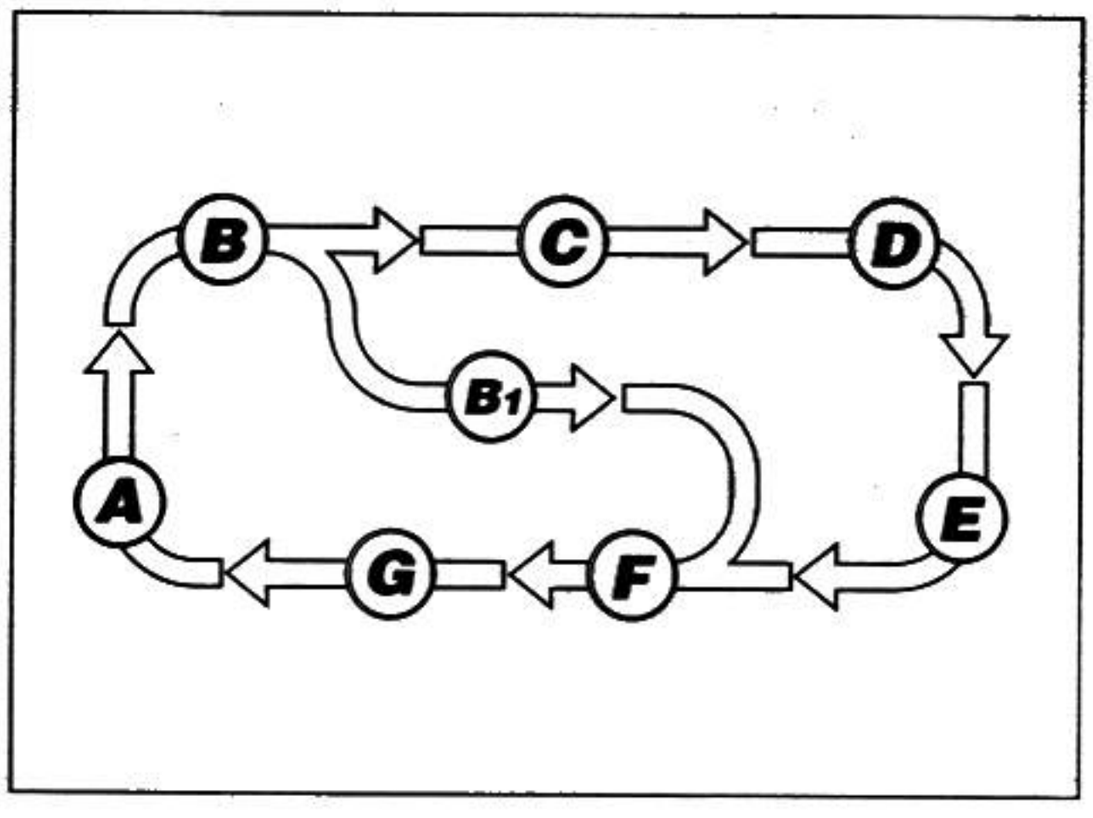

Path with coolant temperature greater than 176 °F (80°C).

From the pump, coolant enters engine (temperature taken by thermistors and shown on the right-hand dashboard display). Coolant leaves the engine to three-way manifold (temperature taken by thermal switch: if greater than 212 °F (100°C), it trips the electric fans; if below 185 °F (85°C), shuts off the fans), to left radiator, to right radiator, to thermostat (completely open), to pump.

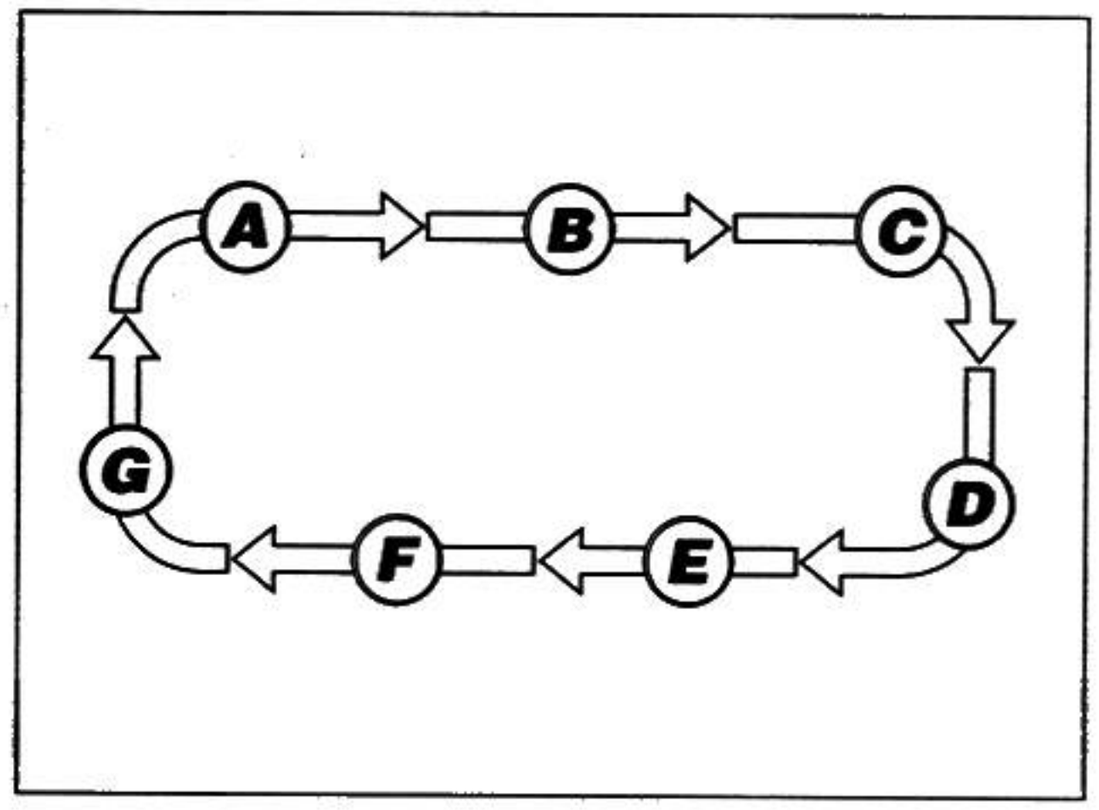

⚠ WARNING

When the ignition switch is set to "⊗", the electric fans switch off regardless of the coolant temperature.

5.2 REMOVING THE RADIATORS

Carefully read 1.3.9 (PRECAUTIONS AND GENERAL INFORMATION) and 1.3.7 (COOLANT).

NOTE The following steps refer to a single radiator, but are applicable to both.

- Set the ignition switch to "⊗".
- Completely discharge the cooling circuit, see 2.15 (CHANGING THE COOLANT).
- Disconnect the electrical connector (1).

⚠ WARNING

When reassembling, make sure the electrical connector (1) is fitted properly.

- Remove the radiator spoiler, see 7.1.35 (REMOVING THE RADIATOR SPOILER).
- Remove both lower fairings, see 7.1.33 (REMOVING THE LOWER FAIRING).
- Remove both air ducts,see 7.1.30 (REMOVING THE LEFT AIR DUCT) and 7.1.31 (REMOVING THE RIGHT AIR DUCT).
- Loosen and remove the click clamp (2).
- Slip the coupling (3) off the radiator (4).
- Loosen and remove the click clamp (5).
- Slip the coupling (6) off the radiator (4).

NOTE Use the special click clamp installation pliers (code 0277295); during reassembly, replace each clamp with a new one of the same kind.

- Release the click clamp (7).
- Slide the hose (8) off the radiator (4).
- Unscrew and remove the screw (9) and recover the bushing and grommet (10) if necessary.

NOTE Replace the grommet (10) if you find it to be damaged.

⚠ WARNING

Proceed with care. Do not damage the radiator fins.

- Tilt the radiator (4) slightly forward while lifting, extracting the two lower anchorage pins (12-13) from their recess on the radiator mount (11).
- Remove the radiator (4) complete with electric fan.

⚠ WARNING

Plug all the coupling openings to prevent any foreign matter from accidentally entering.

NOTE Replace the grommets (14) if damaged.

If necessary:

- Remove the electric cooling fan, see 5.3 (REMOVING THE ELECTRIC COOLING FANS).

⚠ WARNING

Remove any foreign matter, dirt etc. stuck to the radiator fins using compressed air. Straighten any bent fins using a small blade screwdriver. If the radiator hoses (3-6) are torn and/or cracked, they must be replaced.
Before reassembly wash the inside of the radiator thoroughly, using only clean water.

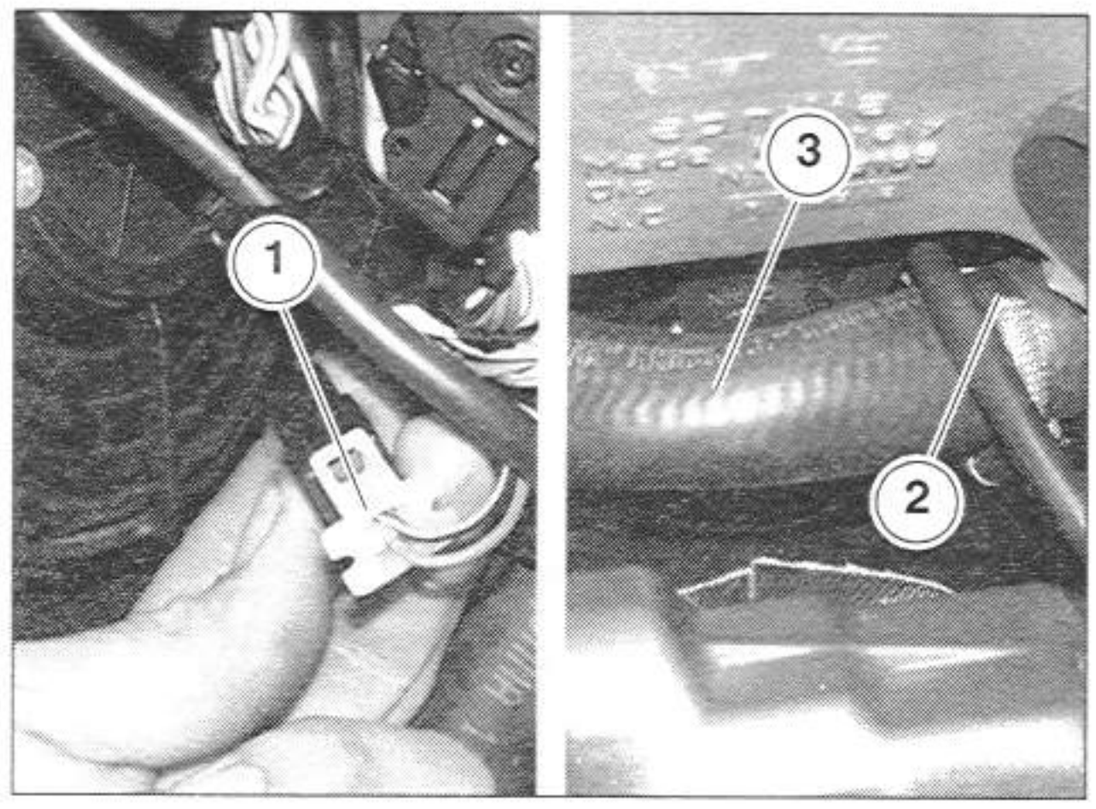

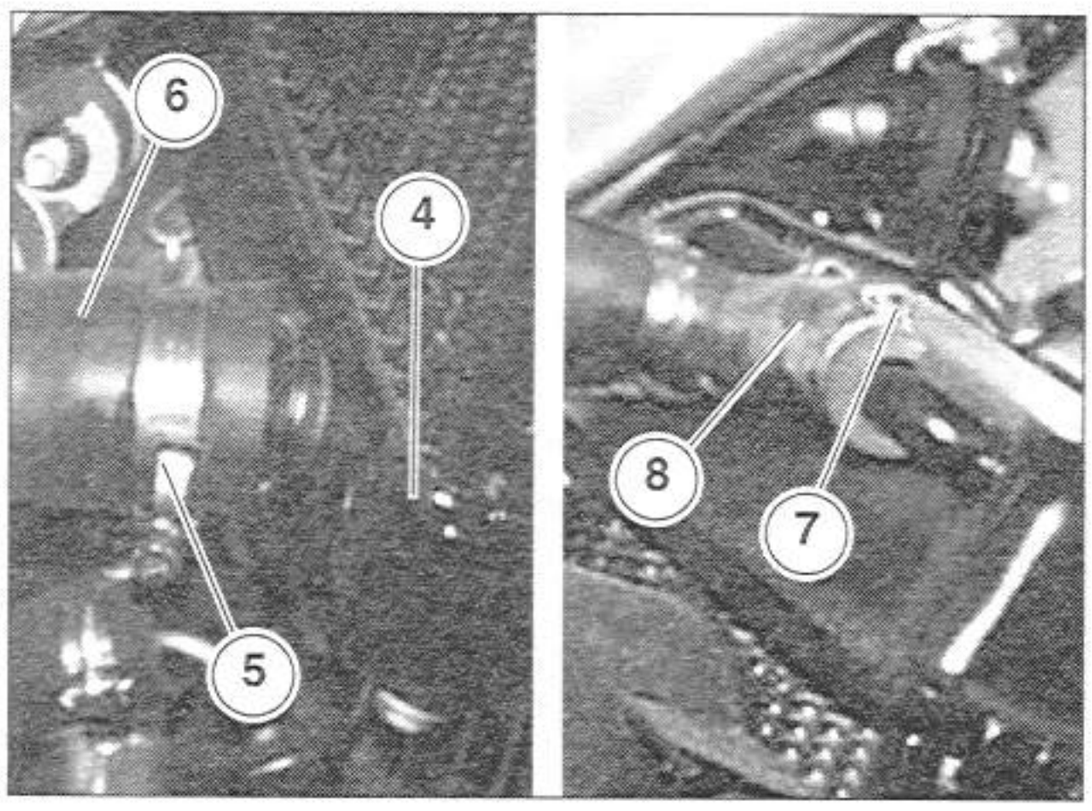

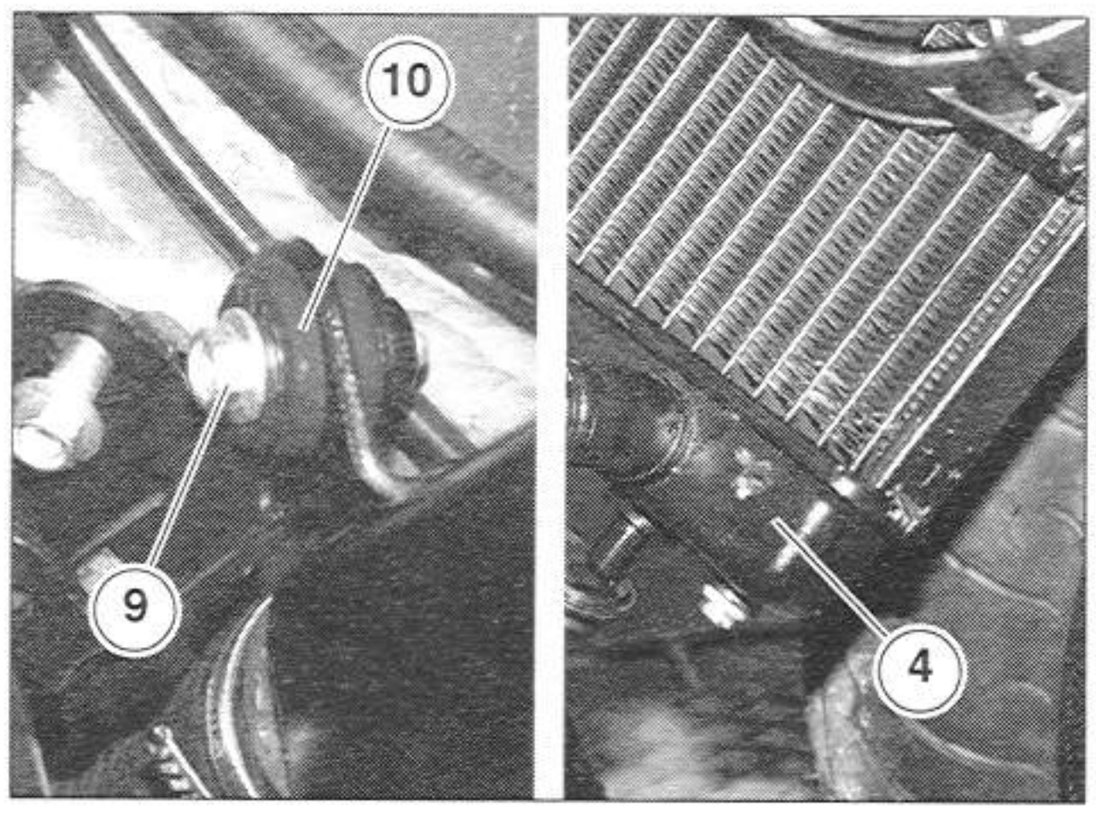

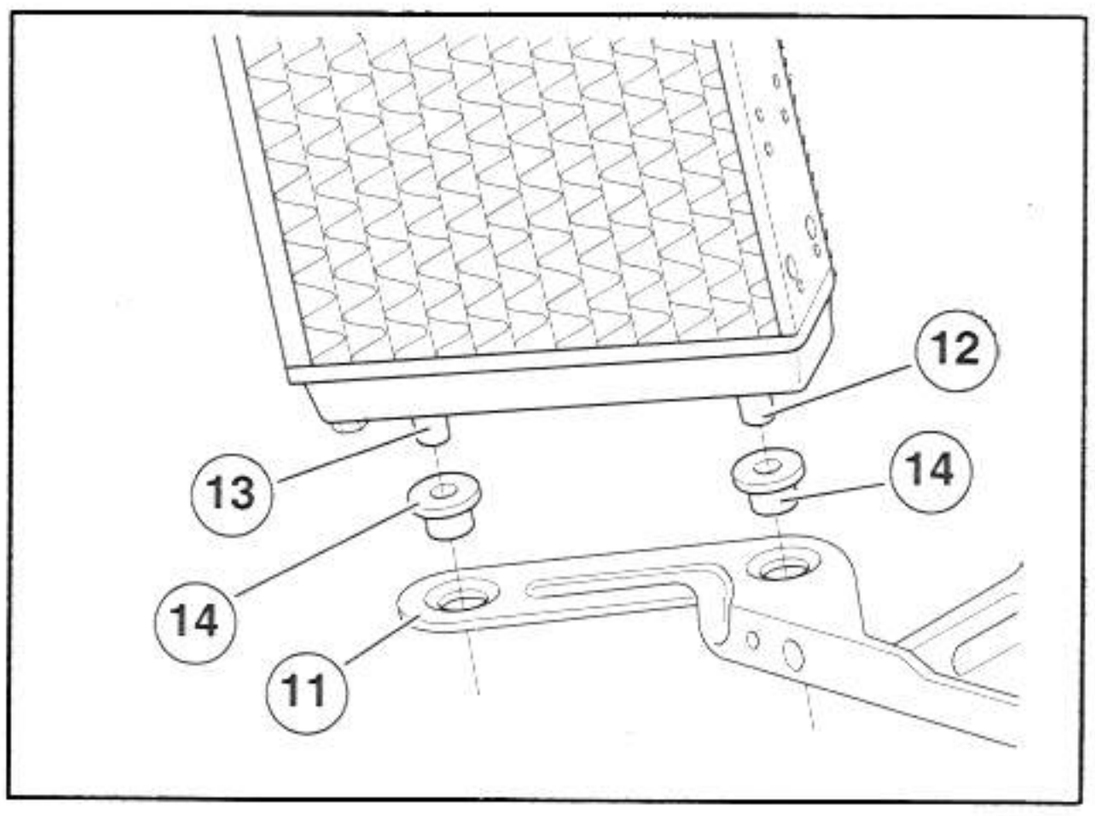

5.3 REMOVING THE ELECTRIC COOLING FANS

Carefully read 1.3.9 (PRECAUTIONS AND GENERAL INFORMATION).

NOTE The following steps refer to a single fan, but are applicable to both.

- Set the ignition switch to "⊗".
- Remove the left fairing in question, see 7.1.28 (REMOVING THE SIDE FAIRINGS).
- Disconnect the electrical connector (1).

⚠ WARNING

When reassembling, make sure the electrical connector (1) is fitted properly.

- Unscrew and remove the two screws (2).

Tightening torque for screws (2): 4.4 ftlb (6 Nm).

- Recover the two nuts (3).
- Tilt the complete electric fan (4) slightly back and, at the same time, move it outwards, pulling the internal holding pin from its seat on the radiator (5).
- Remove the electric fan (4).

NOTE Replace the grommet (6) if you find it to be damaged.

If necessary:

- Unscrew and remove the four screws (7), saving the washers.

Tightening torque for screws (7): 0.7 ftlb (1 Nm).

- Slide out the grating protecting (8) the electric fan motor (9).

NOTE Also remove the other fan if necessary.
For more information about the electric fans, see 6.9 (ELECTRIC COOLING FANS).

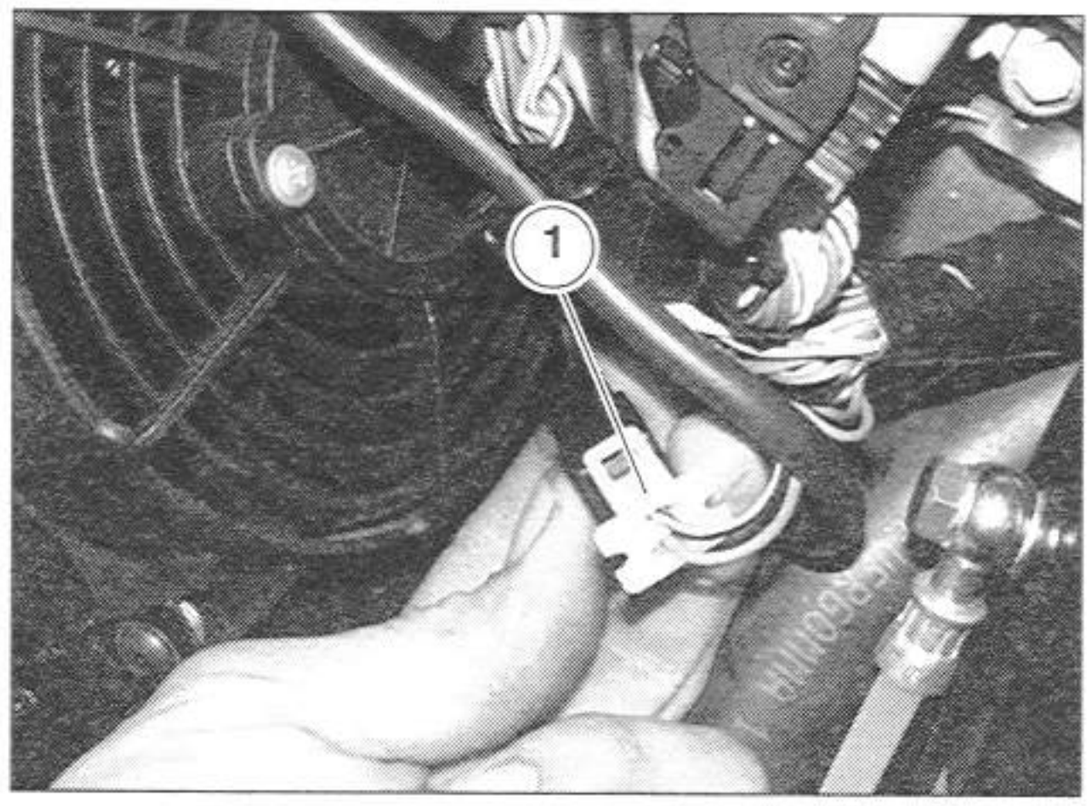

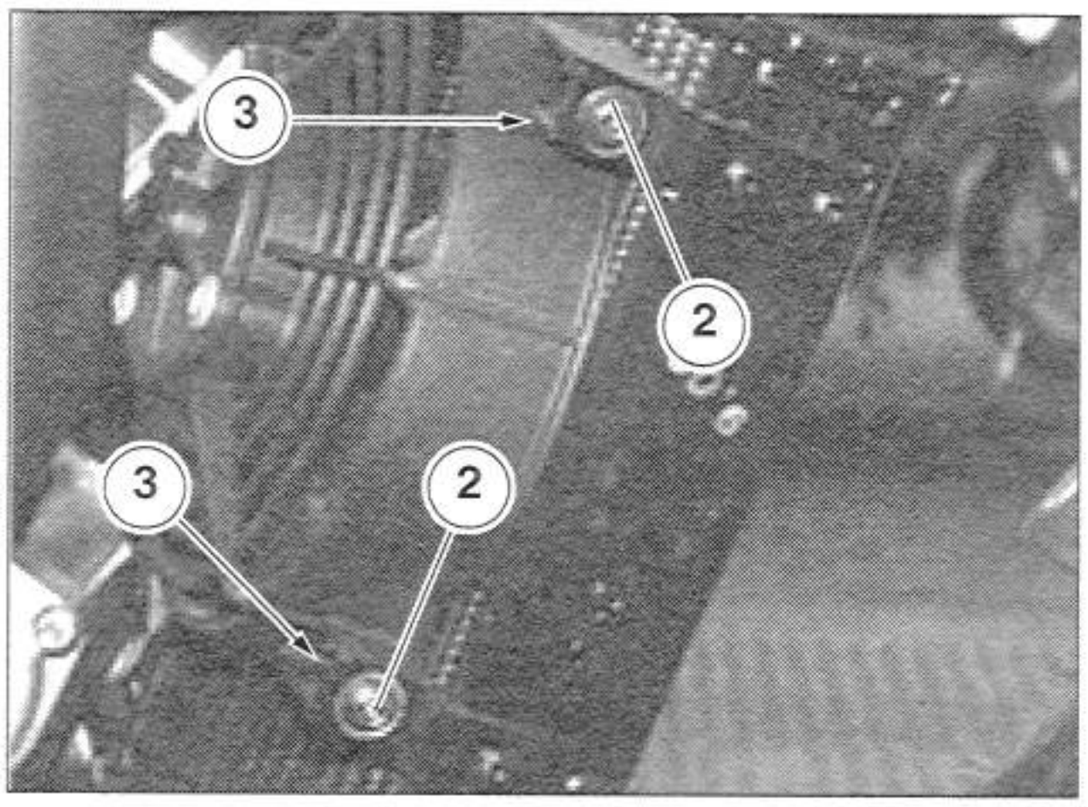

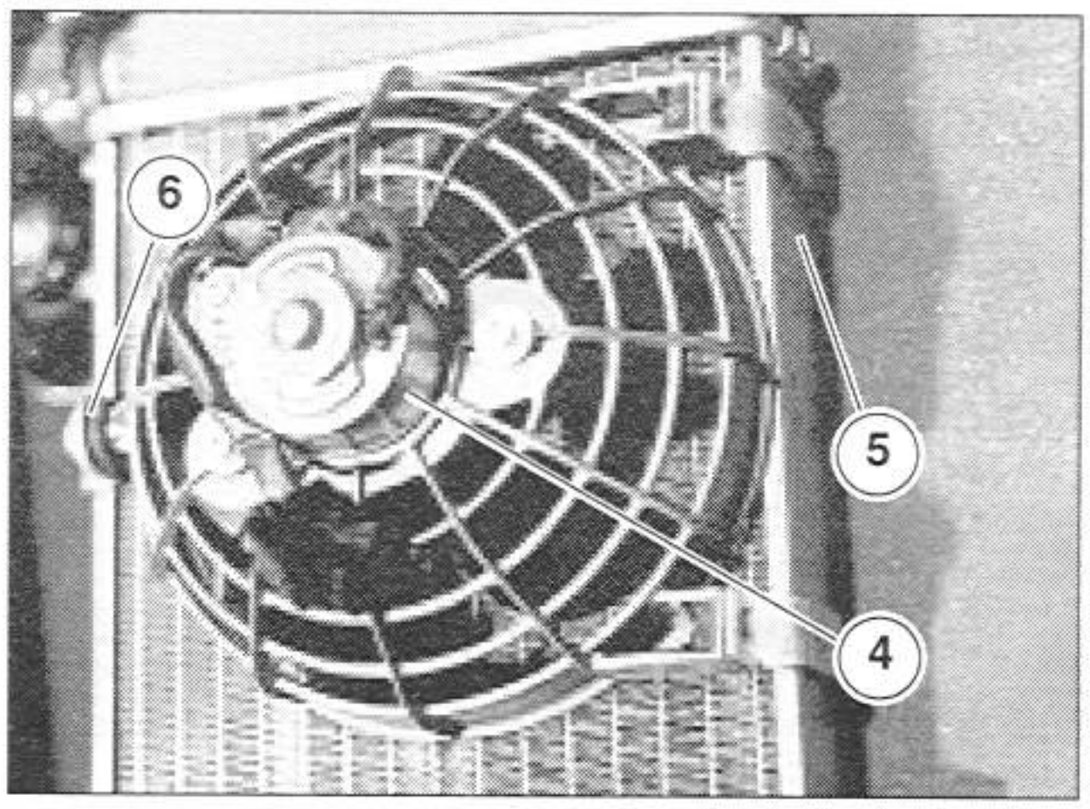

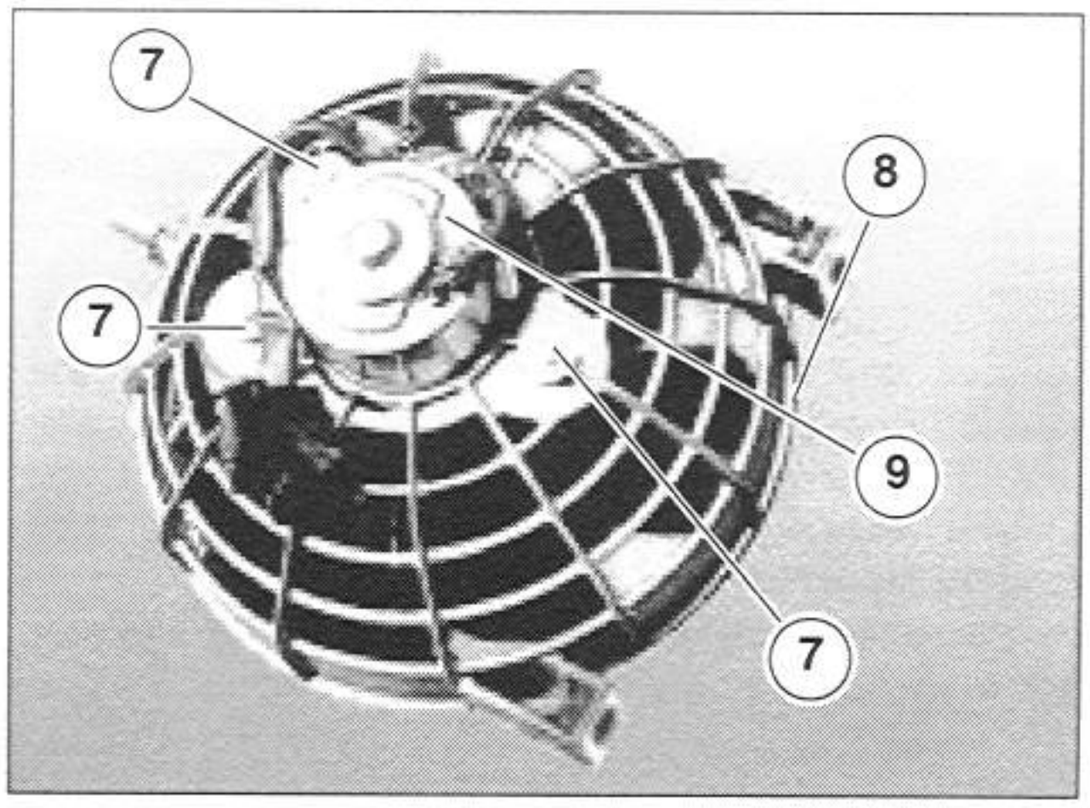

5.4 REMOVING THE COOLANT THERMISTORS.

Carefully read 1.3.9 (PRECAUTIONS AND GENERAL INFORMATION) and 1.4.6 (COOLANT).

NOTE The following steps refer to a single thermistor, but are applicable to both.

- Raise the fuel tank, see 2.8 (LIFTING THE FUEL TANK).
- Loosen the two clamps (1-2).

⚠ WARNING

Be extremely careful when removing the throttle body (3), since it remains attached to cables and lines.

- Firmly grasp the throttle body (3), complete with air filter case, and gradually lift and slide it off the intake flanges.
- Move away and set the group on the left-hand side of the vehicle.
- Disconnect the electrical connector (4).

⚠ WARNING

When reassembling, make sure the electrical connector (4) is fitted properly.

- Unscrew and remove the thermistor (5).
- Prepare a new thermistor and apply LOCTITE® 574 on its thread.
- Screw on the new thermistor (5) by hand, and tighten.
- If any coolant spilled during removal, once the operation is complete top up the coolant level, see 2.14 (CHECKING AND TOPPING UP THE COOLANT).

NOTE Where necessary, remove the other thermistor. For more information about the thermistors, see 6.6.5 (CHECKING THE COOLANT THERMISTORS OPERATION).

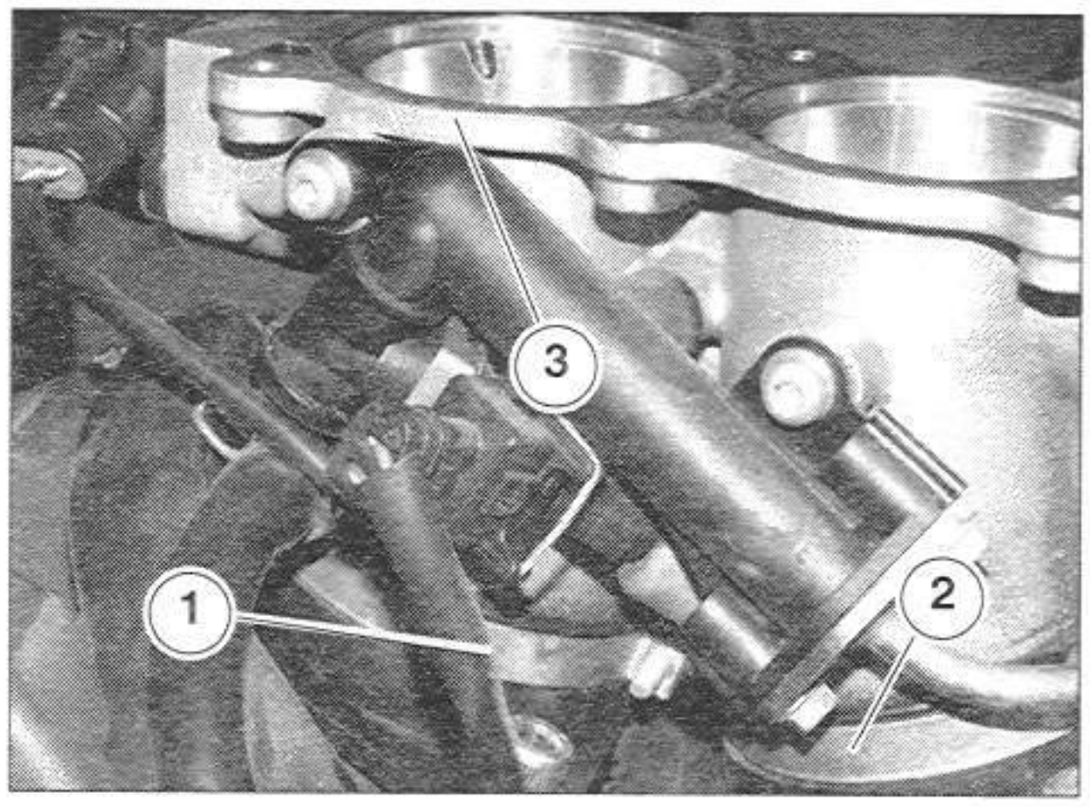

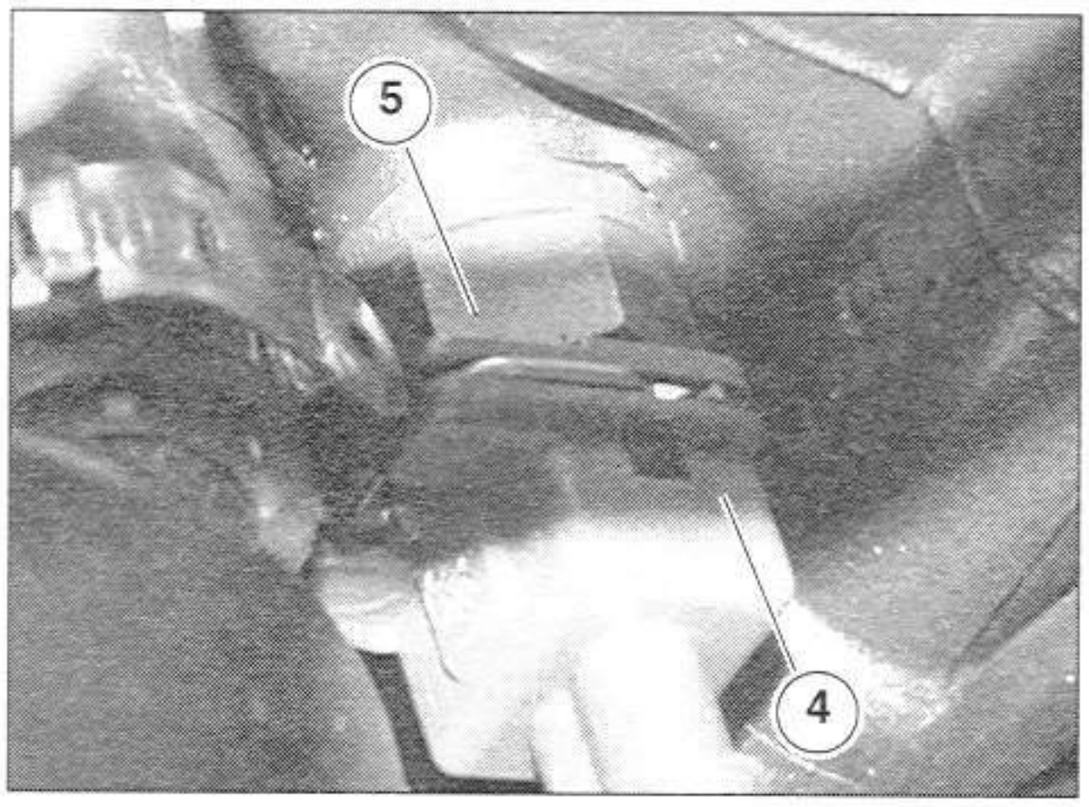

5.5 REMOVING THE THERMOSTAT

Carefully read 1.3.9 (PRECAUTIONS AND GENERAL INFORMATION) and 1.3.7 (COOLANT).

- Completely discharge the cooling circuit, see 2.15 (CHANGING THE COOLANT).

NOTE Use the special click clamp installation pliers (code 0277295); during reassembly, replace each clamp with a new one of the same kind.

- Release the click clamp (1).
- Pull the hose (2) from the thermostat (3).
- Loosen the clamps (4-5).
- Firmly grasp the thermostat (3) and pull it free of the two hoses (6-7) by wiggling the hoses back and forth.

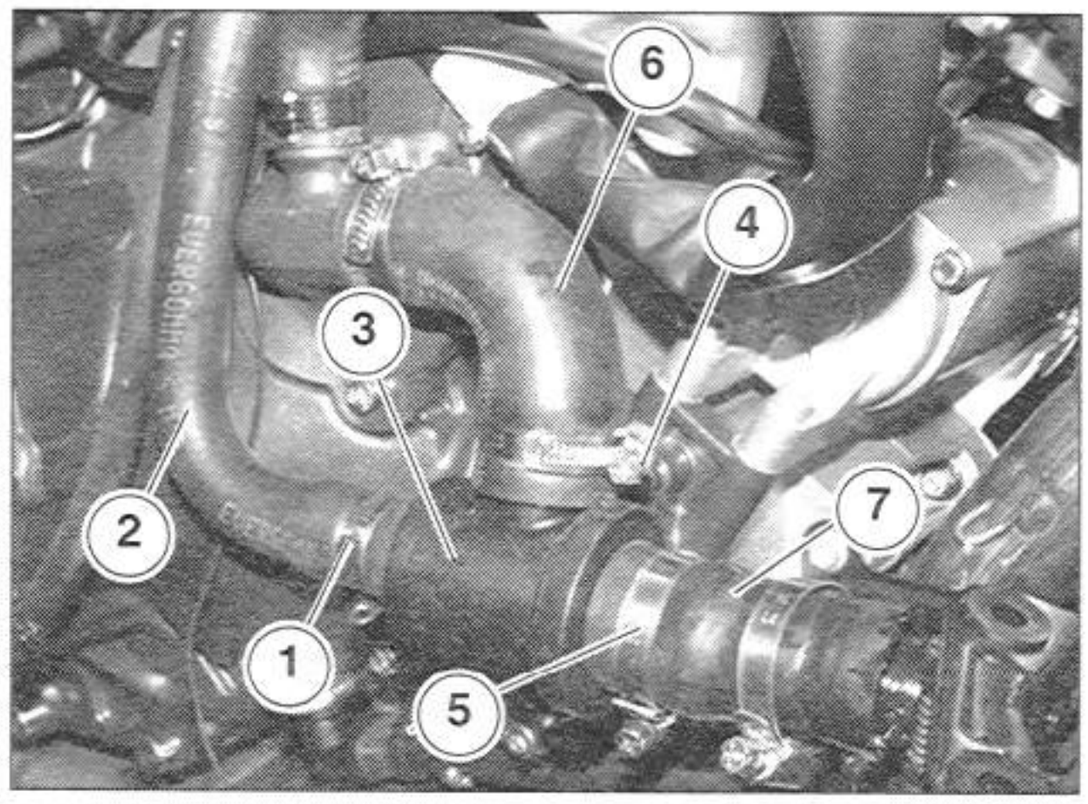

⚠ WARNING

Plug all the coupling openings to prevent any foreign matter from accidentally entering.

5.6 REMOVING THE FILLER NECK

Carefully read 1.3.9 (PRECAUTIONS AND GENERAL INFORMATION) and 1.3.7 (COOLANT).

- Completely discharge the cooling circuit, see 2.15 (CHANGING THE COOLANT).

NOTE Use the special click clamp installation pliers (code 0277295); during reassembly, replace each clamp with a new one of the same kind.

- Release the click clamps (1-2).
- Pull the hoses (3-5) from the filler neck (4).

⚠ WARNING

Plug all the hose openings (3-5) to prevent any foreign matter from accidentally entering.

- Loosen and remove the click clamp (6).
- Slip the coupling (7) off the filler neck (4).
- Unscrew and remove the screw (8) and recover the bushing.
- Remove the filler neck (4).

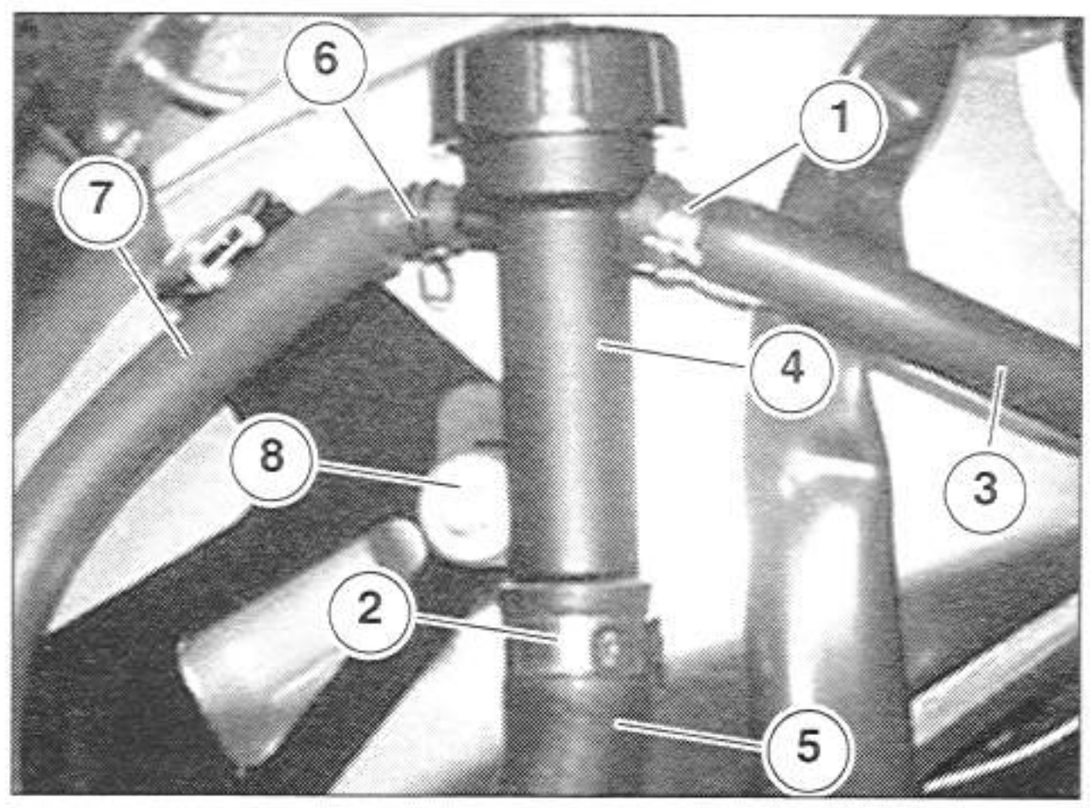

5.7 REMOVING THE THREE-WAY MANIFOLD

Carefully read 1.3.9 (PRECAUTIONS AND GENERAL INFORMATION) and 1.3.7 (COOLANT).

- Carry out the first four steps described in paragraph 5.4 (REMOVING THE COOLANT THERMISTORS.).
- Completely discharge the cooling circuit, see 2.15 (CHANGING THE COOLANT).

NOTE Use the special click clamp installation pliers (code 0277295); during reassembly, replace each clamp with a new one of the same kind.

- Release the click clamps (1-2-3).
- Pull the three hoses (4-5-6) from the manifold (7).
- Loosen and remove the click clamp (8) downward.
- Firmly grasp the manifold (7) and slide it off the hose (9), wiggling it back and forth as you pull.

⚠ WARNING

Plug all the coupling openings to prevent any foreign matter from accidentally entering.

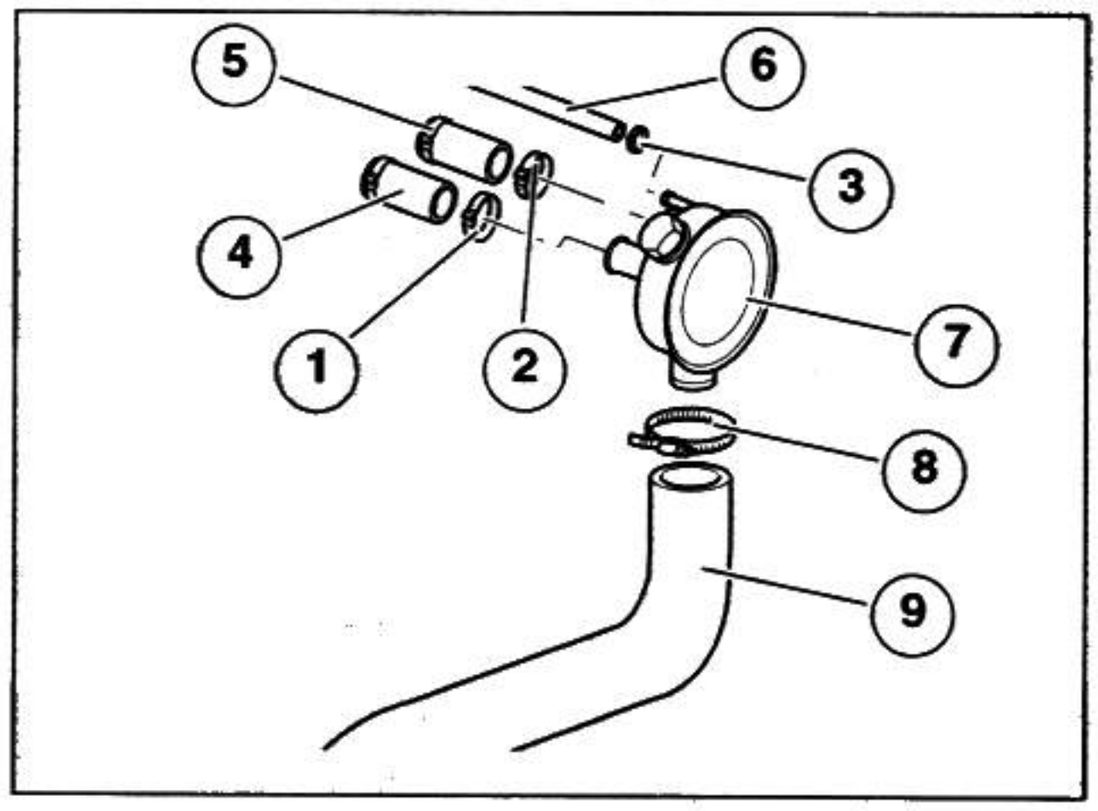

5.8 REMOVING THE EXPANSION TANK

Carefully read 1.3.9 (PRECAUTIONS AND GENERAL INFORMATION) and 1.3.7 (COOLANT).

- Remove the right fairing, see 7.1.28 (REMOVING THE SIDE FAIRINGS).

NOTE Use the special click clamp installation pliers (code 0277295); during reassembly, replace each clamp with a new one of the same kind.

- LLoosen and remove the click clamp (1).
- Pull the hose (2) from the filler neck (3).
- Bend the hose (2) back on itself, and tape it to the top of the expansion tank.
- Unscrew and remove the two fastening screws (4-5) and retrieve the two bushings.
- Remove the expansion chamber (6), keeping it straight.
- If the inner and outer foam edging is damaged, replace it.

⚠ DANGER

Coolant is harmful.
Place the expansion tank (6) in a safe place.
See the safety warnings at 1.2 (SAFETY WARNINGS) with regard to coolant.

KEEP OUT OF REACH OF CHILDREN.

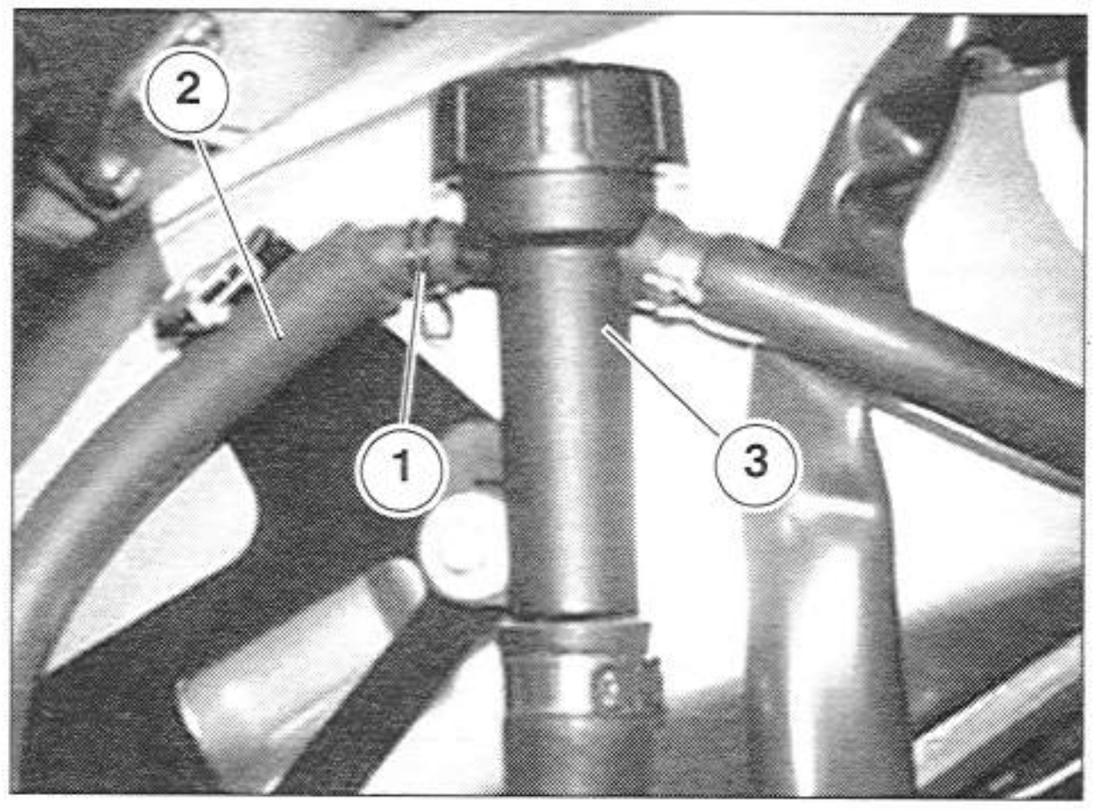

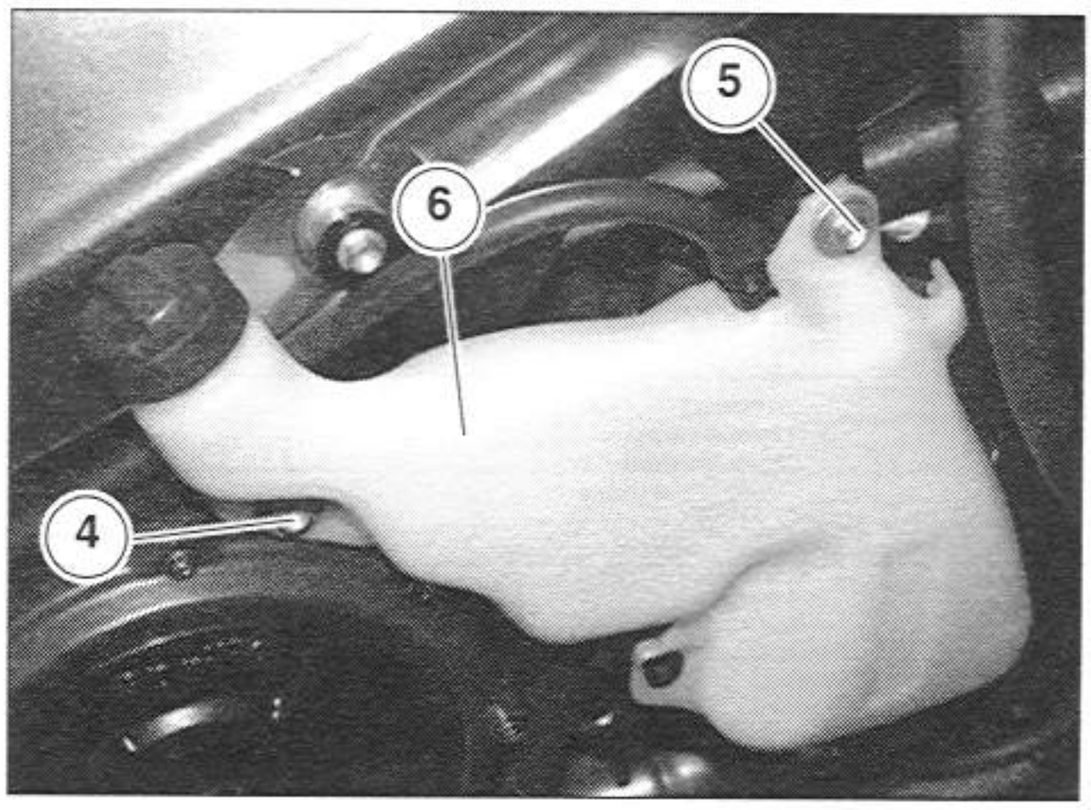

NOTES

ELECTRICAL SYSTEM

6

ELECTRICAL SYSTEM

TABLE OF CONTENTS

6.1 LOCATIONS OF ELECTRICAL COMPONENTS 6-3-00

6.2 INTRODUCTION 6-5-00
6.2.1 WIRE COLORS 6-5-00
6.2.2 ELECTRICAL CONNECTORS 6-5-00

6.3 CHECKING THE RECHARGING SYSTEM 6-6-00
6.3.1 CHECKING THE RECHARGING VOLTAGE 6-6-00
6.3.2 CHECKING THE OPEN-CIRCUIT ALTERNATOR OPERATION 6-6-00
6.3.3 RECHARGING SYSTEM DIAGRAM 6-7-00
6.3.4 CHECKING ALTERNATOR CONTINUITY 6-7-00
6.3.5 CHECKING THE VOLTAGE REGULATOR 6-8-00

6.4 INJECTION SYSTEM 6-9-00
6.4.1 FUEL INJECTION WIRING DIAGRAM . 6-9-00
6.4.2 TROUBLESHOOTING 6-9-00
6.4.3 CHECKING THE INJECTION RELAY. 6-10-00
6.4.4 CHECKING THE OVERTURN SENSOR 6-10-00

6.5 IGNITION/INJECTION SYSTEM 6-11-00
6.5.1 TROUBLESHOOTING 6-12-00
6.5.2 FAULT SITUATIONS 6-12-00
6.5.3 VERIFYING FAULT CODES 6-12-00
6.5.4 TROUBLESHOOTING IN THE ELECTRONIC SYSTEM USING DISPLAYED INFORMATION 6-13-00

6.6 CONNECTIONS TO THE ELECTRONIC CONTROL UNIT 6-14-00
6.6.1 CHECKING THE INJECTORS 6-16-00
6.6.2 CHOKE MOTOR 6-16-00
6.6.3 CHECKING THE THROTTLE VALVE POTENTIOMETER 6-17-00
6.6.4 CHECKING THE AIR THERMISTOR OPERATION 6-18-00
6.6.5 CHECKING THE COOLANT THERMISTORS OPERATION 6-19-00
6.6.6 CHECKING THE IGNITION COILS 6-20-00
6.6.7 CHECKING THE CRANKSHAFT POSITION SENSOR 6-20-00

6.7 FUEL PUMP SYSTEM 6-21-00
6.7.1 WIRING DIAGRAM 6-21-00
6.7.2 CHECKING THE FUEL PUMP 6-22-00
6.7.3 CHECKING THE FUEL PUMP RELAY 6-22-00

6.8 IGNITION SAFETY SYSTEM 6-23-00
6.8.1 WIRING DIAGRAM 6-23-00
6.8.2 STARTING SAFETY OPERATING LOGIC 6-24-00
6.8.3 CHECKING THE START RELAY 6-24-00
6.8.4 CHECKING THE DIODE 6-25-00
6.8.5 CHECKING THE SIDE STAND SWITCH 6-26-00
6.8.6 CHECKING THE DIODE MODULE 6-26-00
6.8.7 CHECKING THE SAFETY SYSTEM SWITCHES 6-27-00

6.9 ELECTRIC COOLING FANS 6-28-00
6.9.1 WIRING DIAGRAM 6-28-00
6.9.2 CHECKING THE ELECTRIC FAN OPERATION 6-28-00

6.10 DASHBOARD INDICATORS 6-29-00
6.10.1 WIRING DIAGRAM 6-29-00
6.10.2 AIR TEMPERATURE SENSOR 6-30-00
6.10.3 ENGINE OIL PRESSURE SENSOR 6-31-00
6.10.4 SPEED SENSOR 6-32-00
6.10.5 FUEL LEVEL SENSOR 6-33-00
6.10.6 COOLANT TEMPERATURE SENSOR 6-34-00

6.11 LIGHT SYSTEM 6-35-00
6.11.1 WIRING DIAGRAM 6-35-00
6.11.2 CHECKING THE LIGHT RELAY 6-36-00

6.12 WARNING LIGHTS AND BUZZERS 6-37-00
6.12.1 WIRING DIAGRAM 6-37-00
6.12.2 HORN TEST 6-38-00
6.12.3 FLASHER TEST 6-38-00

6.13 WARNING LIGHTS AND BUZZERS 6-39-00
6.13.1 WIRING DIAGRAM 6-39-00
6.13.2 SWITCHES 6-40-00

6.14 BATTERY 6-41-00
6.14.1 ACTIVATING THE BATTERY 6-41-00
6.14.2 MAINTENANCE 6-43-00
6.14.3 CHECKING 6-43-00
6.14.4 RETURN UNDER WARRANTY 6-43-00

6.15 REPLACING THE BULBS 6-44-00
6.15.1 REPLACING THE HEADLIGHT BULBS 6-44-00
6.15.2 REPLACING THE FRONT DIRECTION INDICATOR LAMPS 6-46-00
6.15.3 REPLACING THE TAILLIGHT BULBS 6-46-00
6.15.4 REPLACING THE LICENSE PLATE LIGHT BULBS 6-47-00

6.16 CHANGING FUSES 6-48-00

6.17 ADJUSTING THE HEADLIGHT BEAM VERTICALLY 6-49-00

6.18 ADJUSTING THE HEADLIGHT BEAM HORIZONTALLY 6-49-00

6.19 WIRING DIAGRAM - RST MILLE FUTURA 6-50-00

6.1 LOCATIONS OF ELECTRICAL COMPONENTS

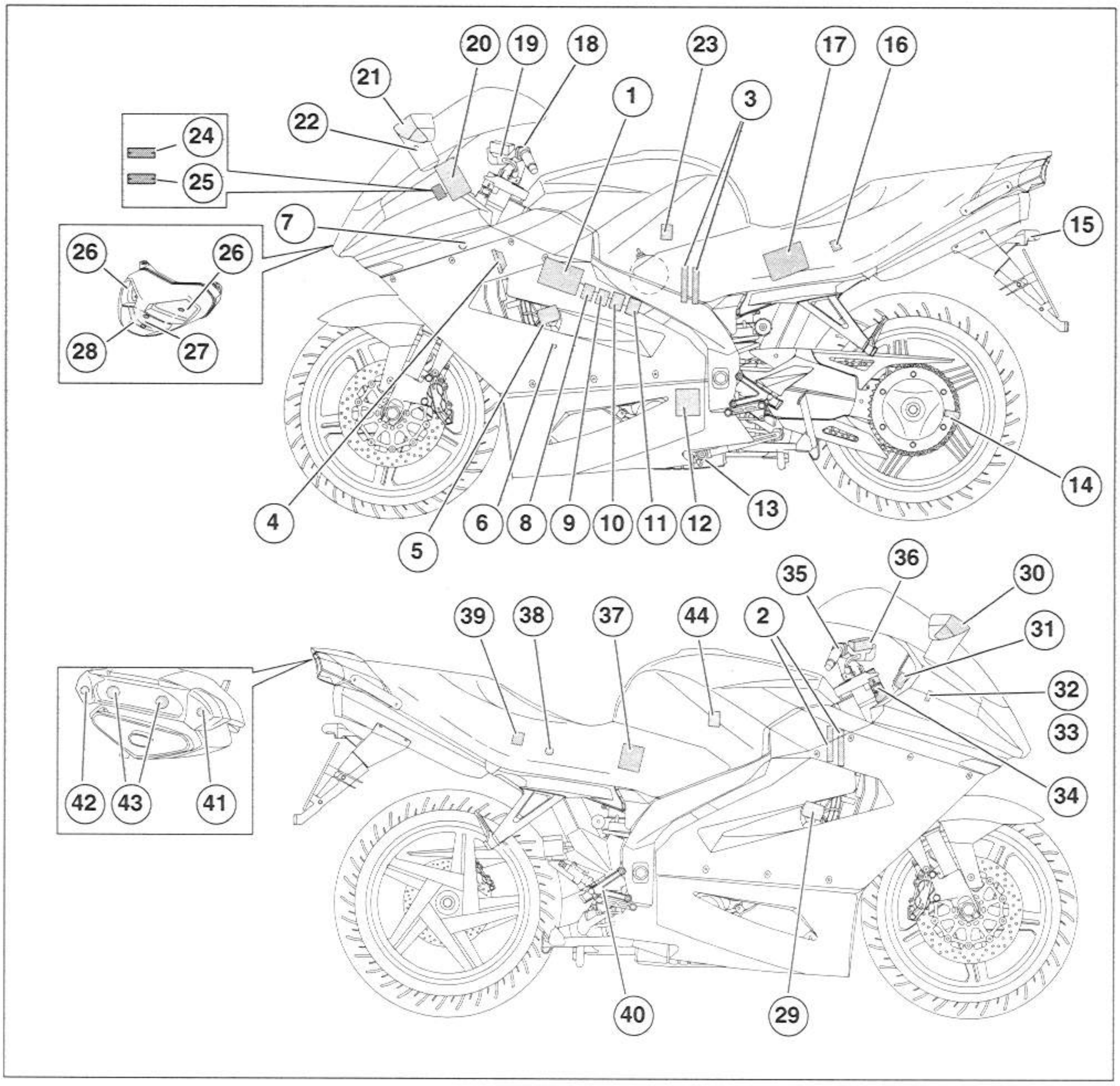

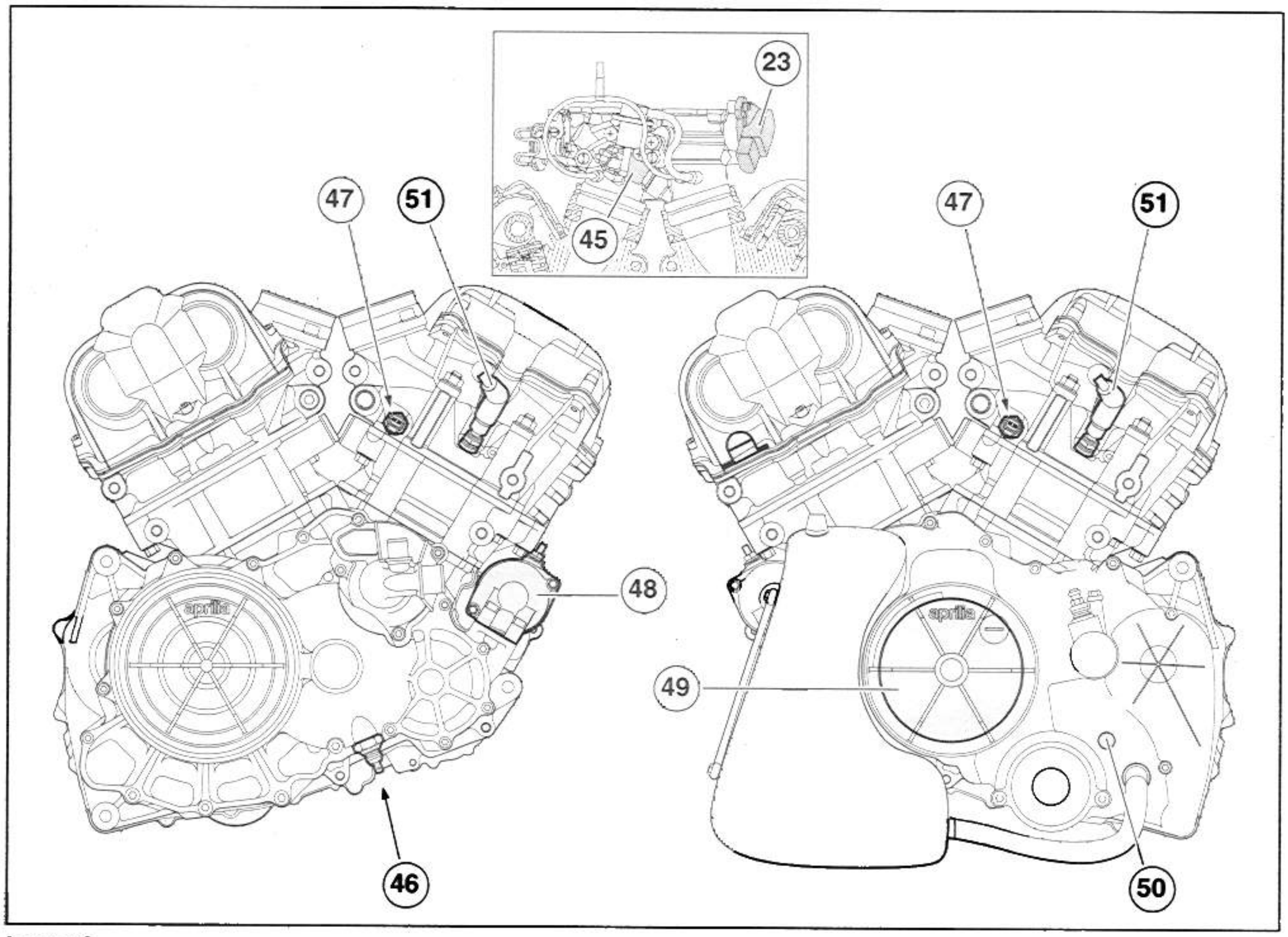

Legend

1) Electronic control unit
2) Front cylinder coils
3) Rear cylinder coils
4) Horn
5) Left fan
6) Diode
7) Air thermistor
8) Fuel pump relay
9) Engine stop relay
10) Injection relay
11) Diode module
12) Voltage regulator
13) Side stand switch
14) Speed sensor
15) License plate lamp
16) Start relay
17) Battery
18) Left dimmer switch
19) Clutch switch
20) Dashboard
21) Front left direction indicator
22) Air temperature sensor
23) Throttle sensor
24) Low beam relay
25) High beam relay
26) High beam bulbs
27) Low beam bulb
28) Front parking light bulb
29) Right fan
30) Front right direction indicator
31) Secondary fuses (15A)
32) Flasher
33) Overturn sensor
34) Ignition switch
35) Right dimmer switch
36) Front stop switch
37) Fuel pump/sensor group
38) Test and diagnostics connector
39) Main fuses (30 A)
40) Rear stop switch
41) Right rear direction indicator
42) Left rear direction indicator
43) Taillight
44) Stepper (choke)
45) Injector
46) Oil pressure sensor
47) Coolant temperature thermistor
48) Starter motor
49) Pick-up flywheel
50) Neutral switch
51) Spark plugs

6.2 INTRODUCTION

The following instructions will help you in consulting this section.

NOTE The numbers that appear on the specific wiring diagrams match those given in the overall wiring diagram.

6.2.1 WIRE COLORS

Ar orange
Az light blue
B blue
Bi white
G yellow
Gr grey
M brown
N black
R red
Ro pink
V green
Vi purple

6.2.2 ELECTRICAL CONNECTORS

Disconnect two electrical connectors as follows:

- Press the safety latches, if provided.

⚠ WARNING

Do not pull on the wires to disconnect the two connectors.

- Grasp the two connectors and disconnect them by pulling in opposite directions.
- If you see any dirt, rust, moisture, etc., carefully clean the inside of the connector using compressed air.
- Make sure that the cables are correctly crimped to the terminals placed inside the connectors.

NOTE The connector are keyed to ensure that they are properly assembled.

- If the connectors are properly connected, you will hear the typical "click" sound for those connectors equipped with safety latch.

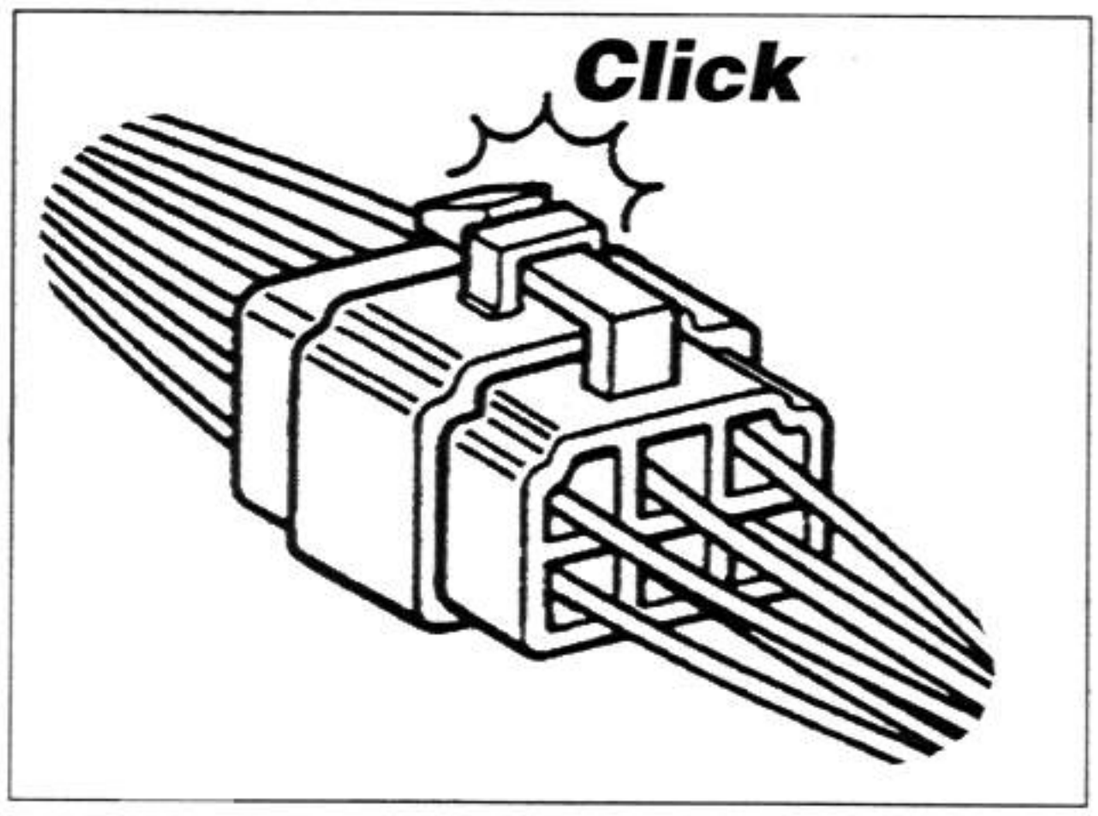

6.3 CHECKING THE RECHARGING SYSTEM

6.3.1 CHECKING THE RECHARGING VOLTAGE

- Check the battery voltage, see 2.4.2 (RECHARGING THE BATTERY).
- Start the engine and rev it to 4000 rpm.
- Set the light switch to "☼" and the light dimmer to "≡D".
- ASD Set the light dimmer to "≡D".
- Use a tester to measure the DC voltage between the positive (+) and negative (–) terminals of the battery.

If the tester indicates voltages below 13 V or above 15 V:

- Check the open-circuit operation and continuity of the alternator, see 6.3.2 (CHECKING THE OPEN-CIRCUIT ALTERNATOR OPERATION), 6.3.4 (CHECKING ALTERNATOR CONTINUITY) and the voltage regulator, see 6.3.5 (CHECKING THE VOLTAGE REGULATOR).

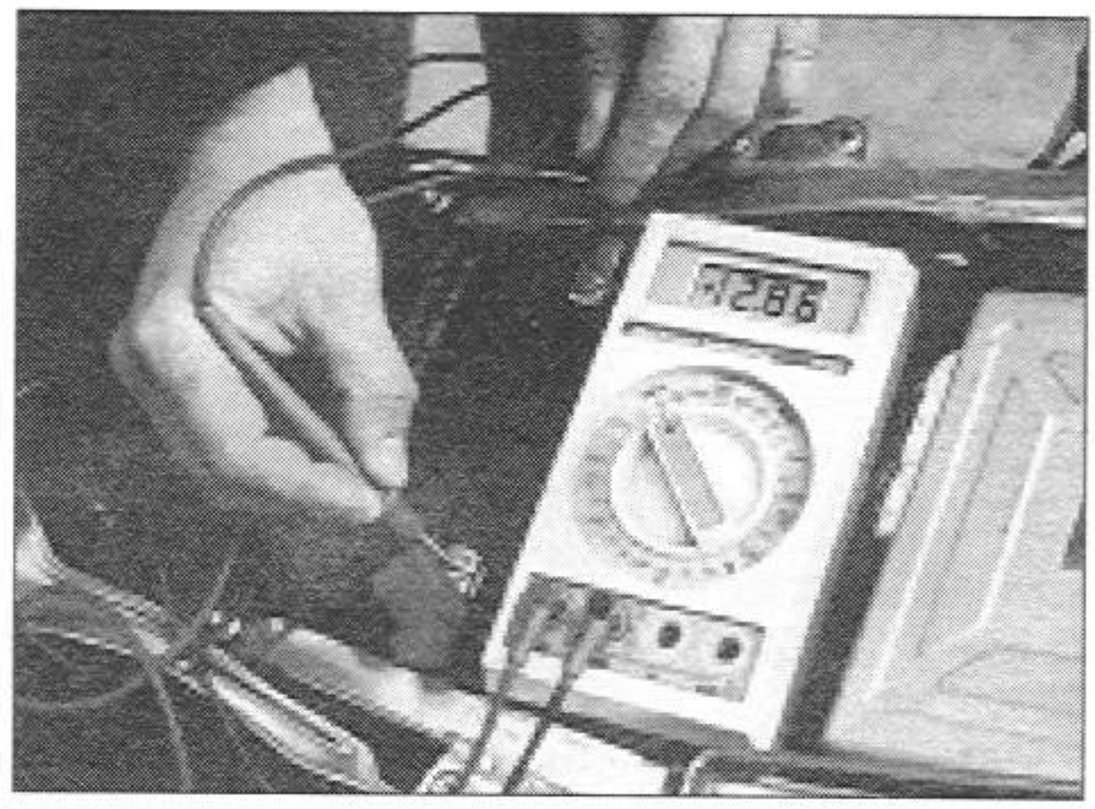

Wiring diagram legend

NOTE For the positions of the components, see 6.1 (LOCATIONS OF ELECTRICAL COMPONENTS).

1) Battery
2) Main fuses (30 A)
3) Alternator
4) Voltage regulator
5) Ignition switch (◯ - ⊗ - ⚿ - P≡)

Standard charge voltage: 13 - 15 V (DC) at 4000 rpm.

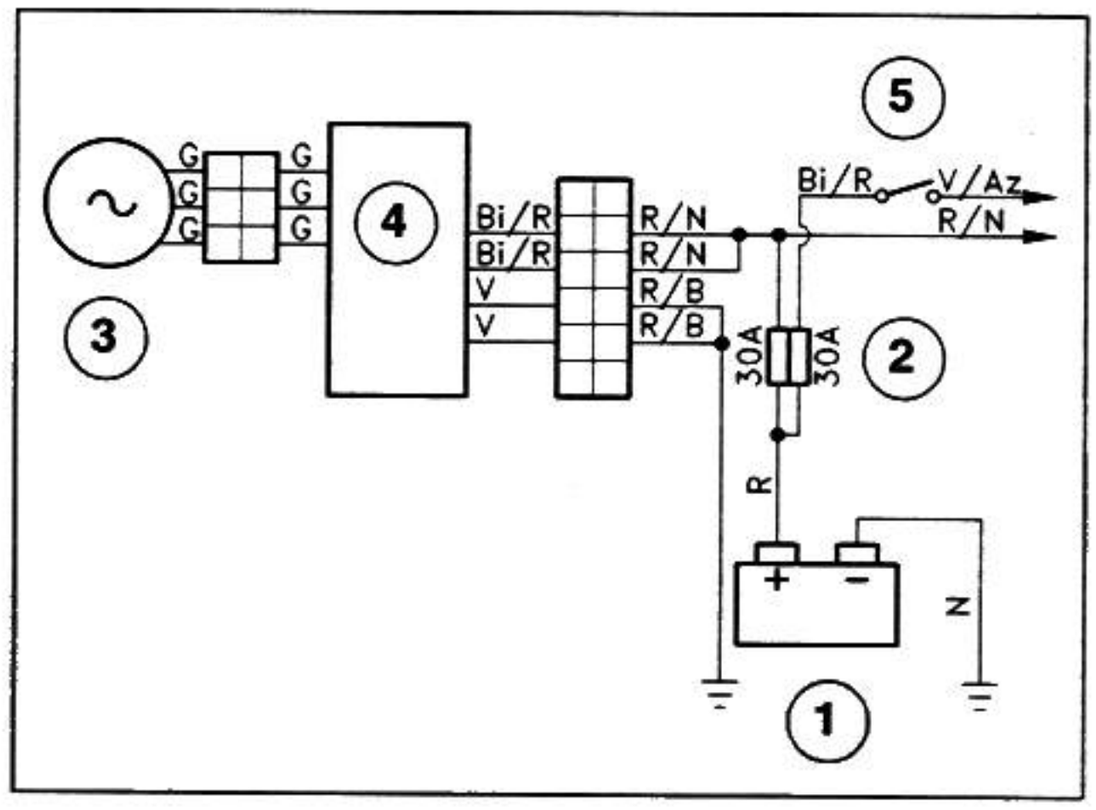

6.3.2 CHECKING THE OPEN-CIRCUIT ALTERNATOR OPERATION

- Remove the left lower fairing, see 7.1.33 (REMOVING THE LOWER FAIRING).
- Disconnect the three-way connector (1) (brown) voltage regulator cables.

⚠ WARNING

When reassembling, make sure the electrical connector (1) is properly connected.

- Start the engine and rev it to 4000 rpm.
- Use a tester to measure the voltage (AC) from the three internal male terminals [yellow cables (G)] in rotation.

If the output voltage is less than 60 V, the alternator is faulty and must be replaced.

Standard open-circuit voltage:

greater than 60 V (AC) at 4000 rpm.

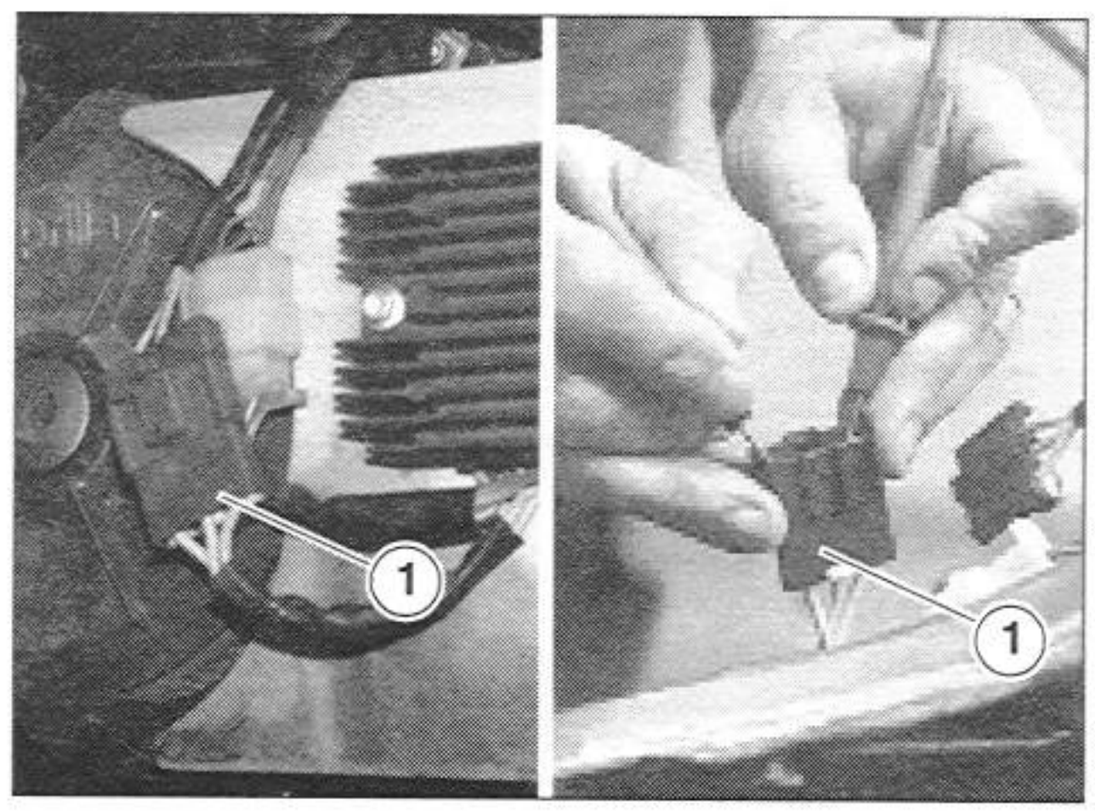

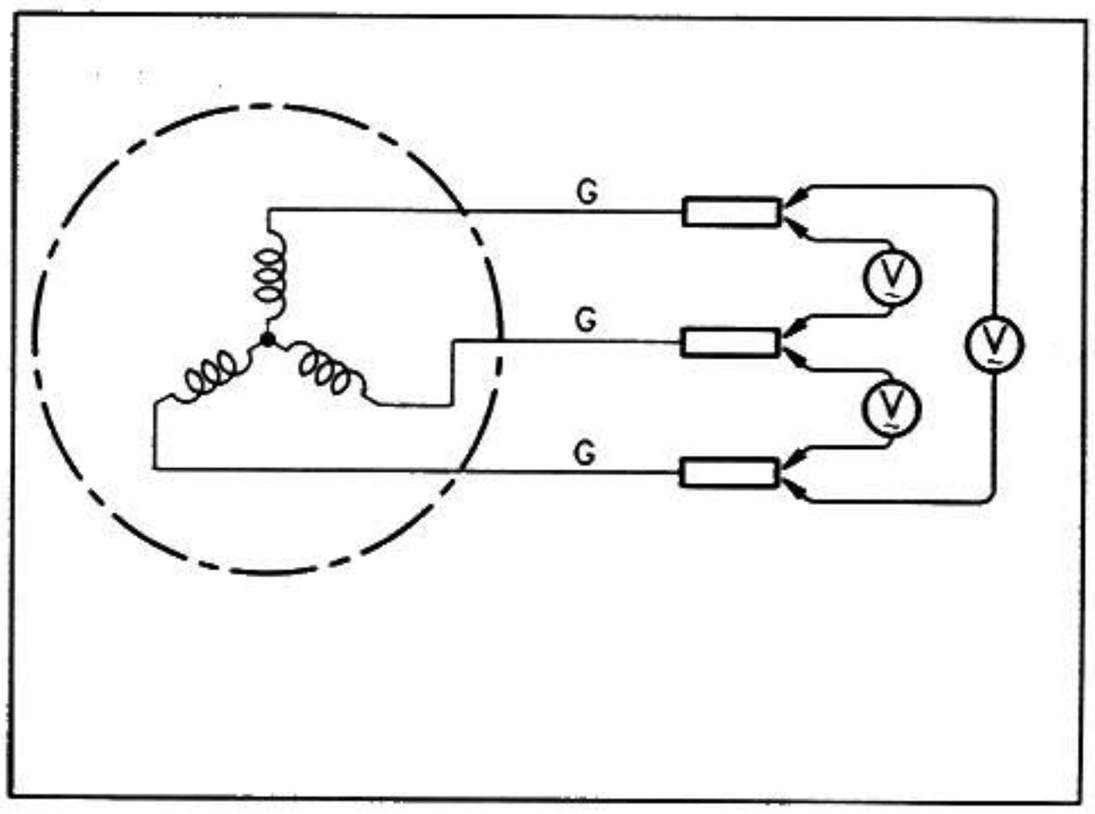

6.3.3 RECHARGING SYSTEM DIAGRAM

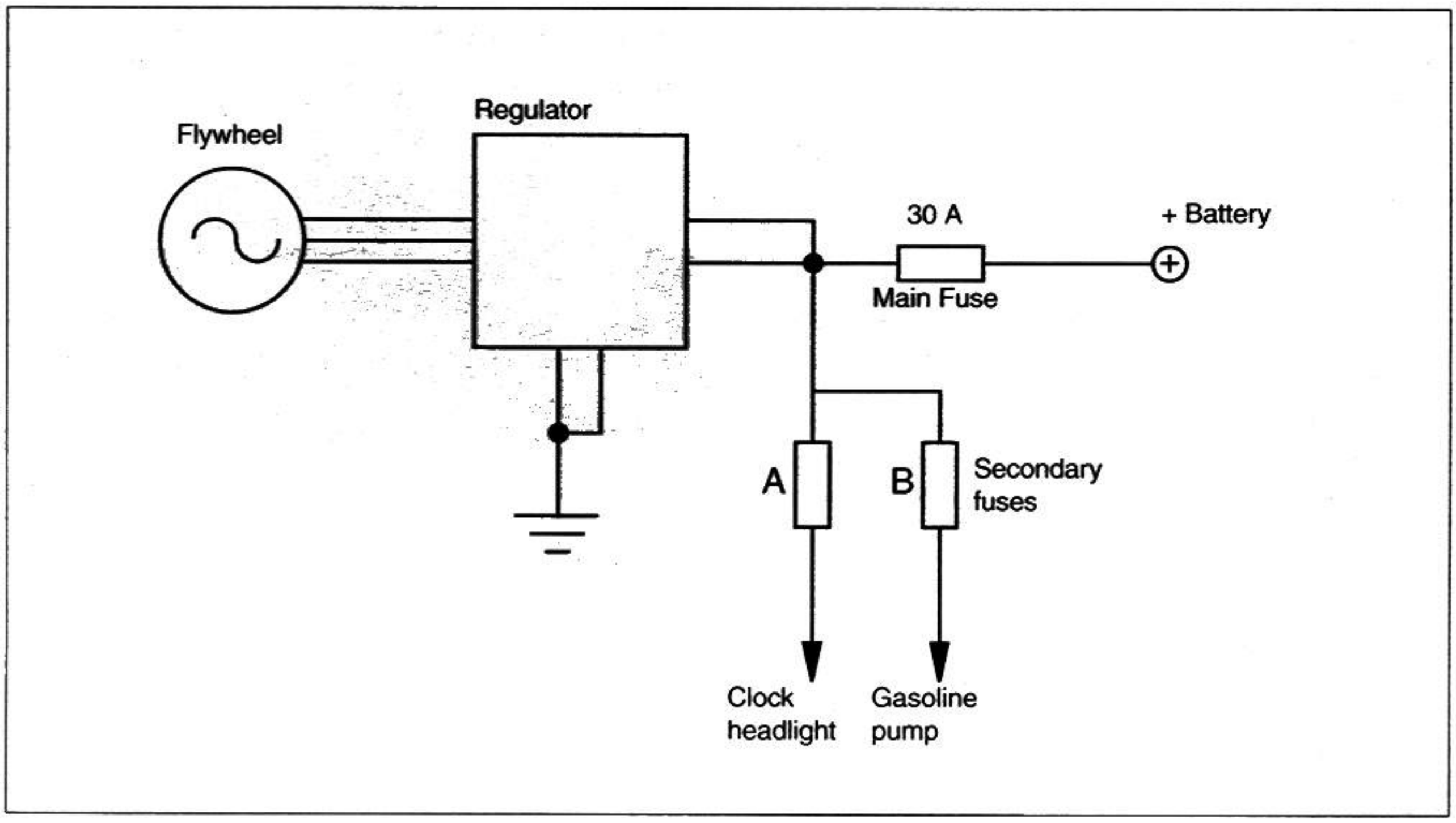

6.3.4 CHECKING ALTERNATOR CONTINUITY

With the engine off:

- Remove the lower fairing, see 7.1.33 (REMOVING THE LOWER FAIRING).
- Disconnect the three-way connector (1) (brown) voltage regulator cables.

⚠ WARNING

When reassembling, make sure the electrical connector (1) is properly connected.

- Use a tester (scale Ω) to check the continuity between the cables of the stator [on the internal female terminals, yellow cables (G)].
  Also check the isolation of the stator mount.

Standard resistance value: 0.1 -1Ω

Standard resistance value (between cables and stator mount): ∞.

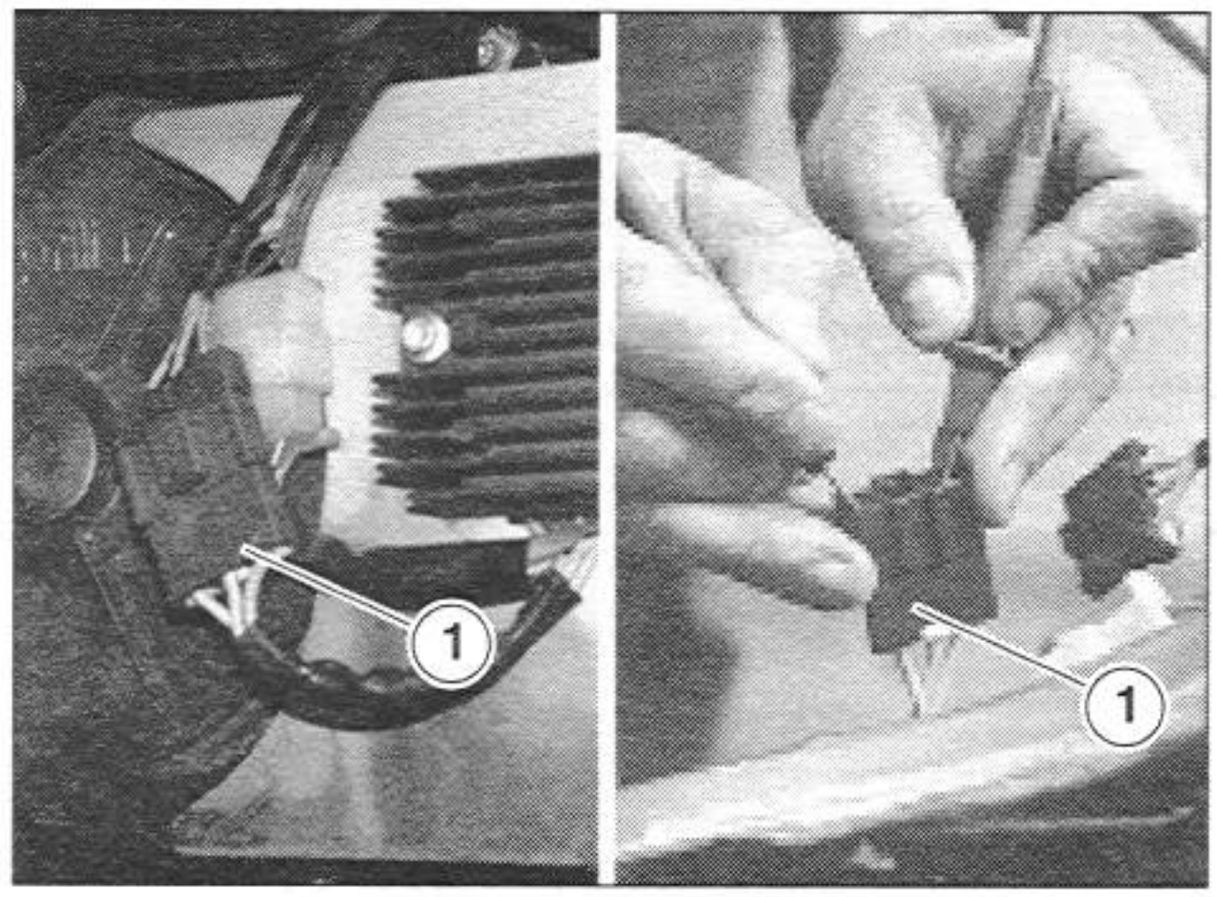

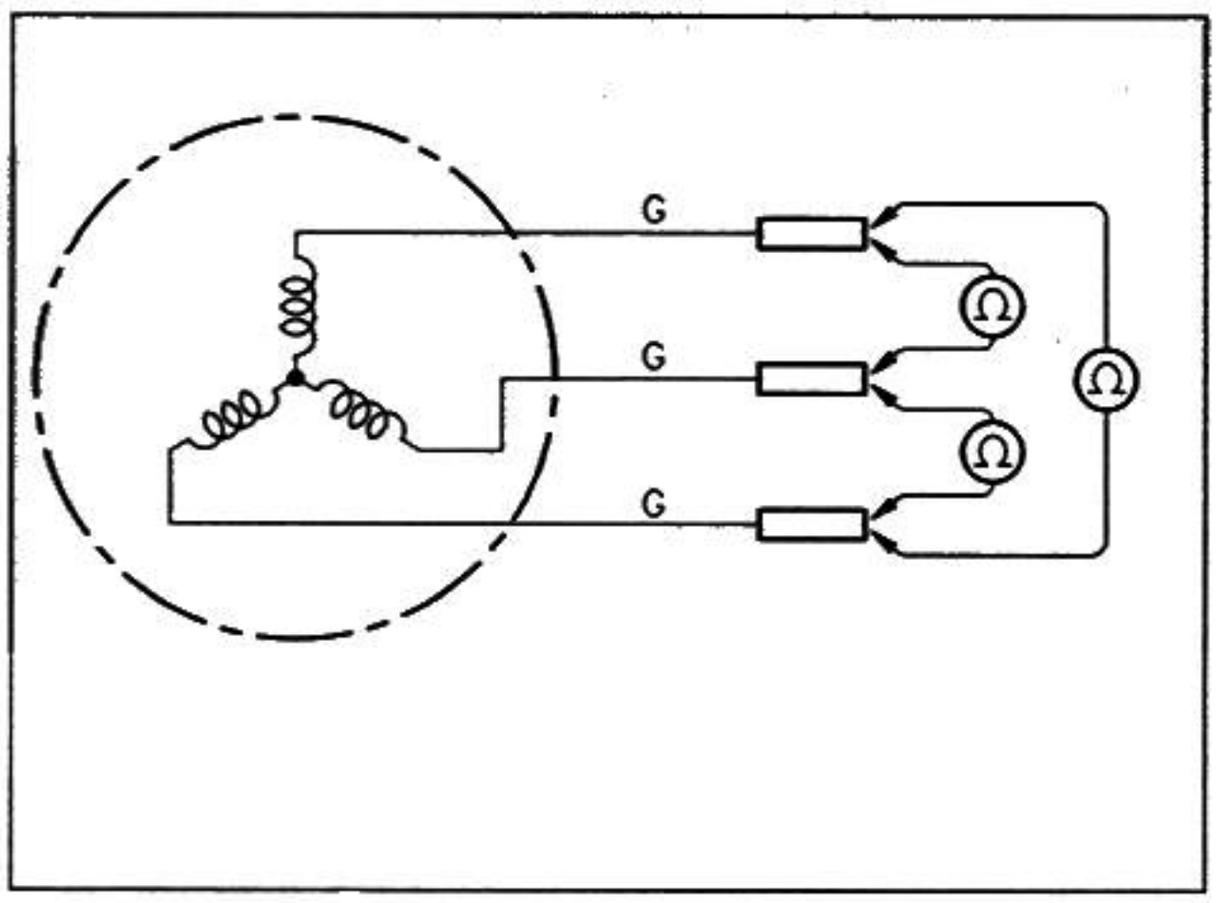

6.3.5 CHECKING THE VOLTAGE REGULATOR

- Remove the lower fairing, see 7.1.33 (REMOVING THE LOWER FAIRING).
- Disconnect the three-way connector (1) (brown).
- Disconnect the six-way connector (2) (white).

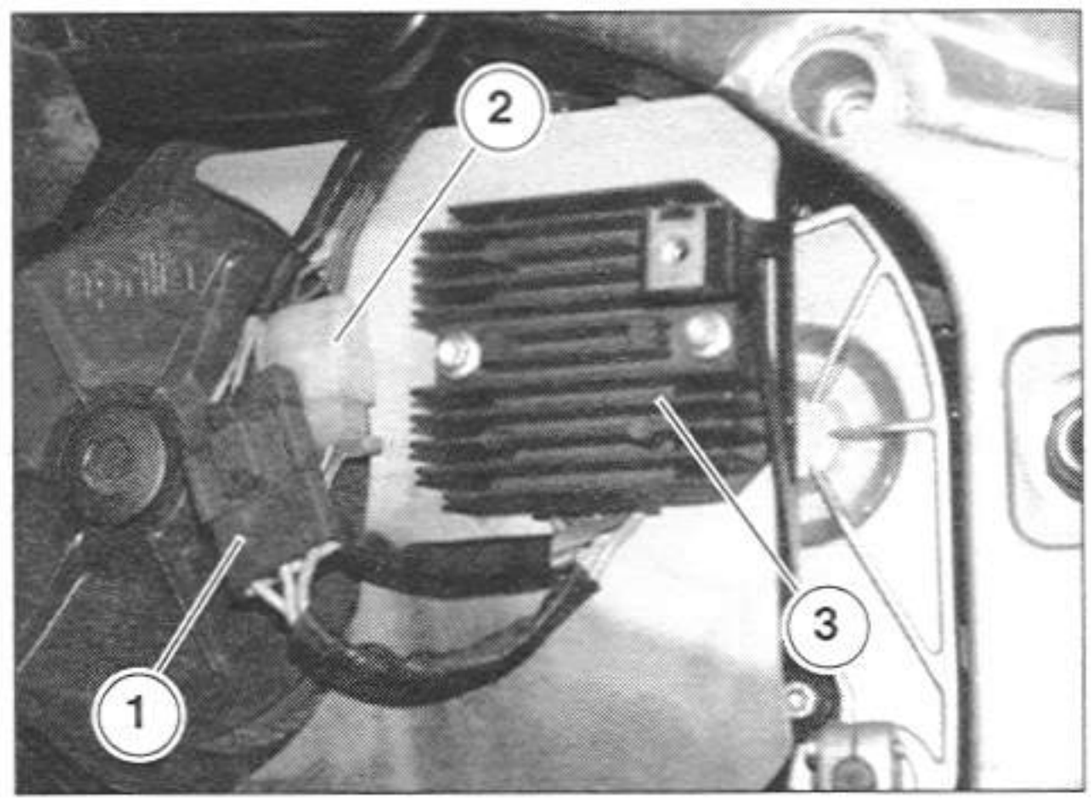

⚠ WARNING

When reassembling, make sure the electrical connectors (1-2) are fitted properly.

- Use a tester (scale x 1MΩ) to measure the resistance between the cables indicated in the table below, from the regulator side (internal male terminals).

NOTE There are two green (V) and two red/white (Bi/R) wires. The two green wires are connected together, and the two red/white wires are connected together. Measurements may be made using either of the two green, and either of the two red/white wires.

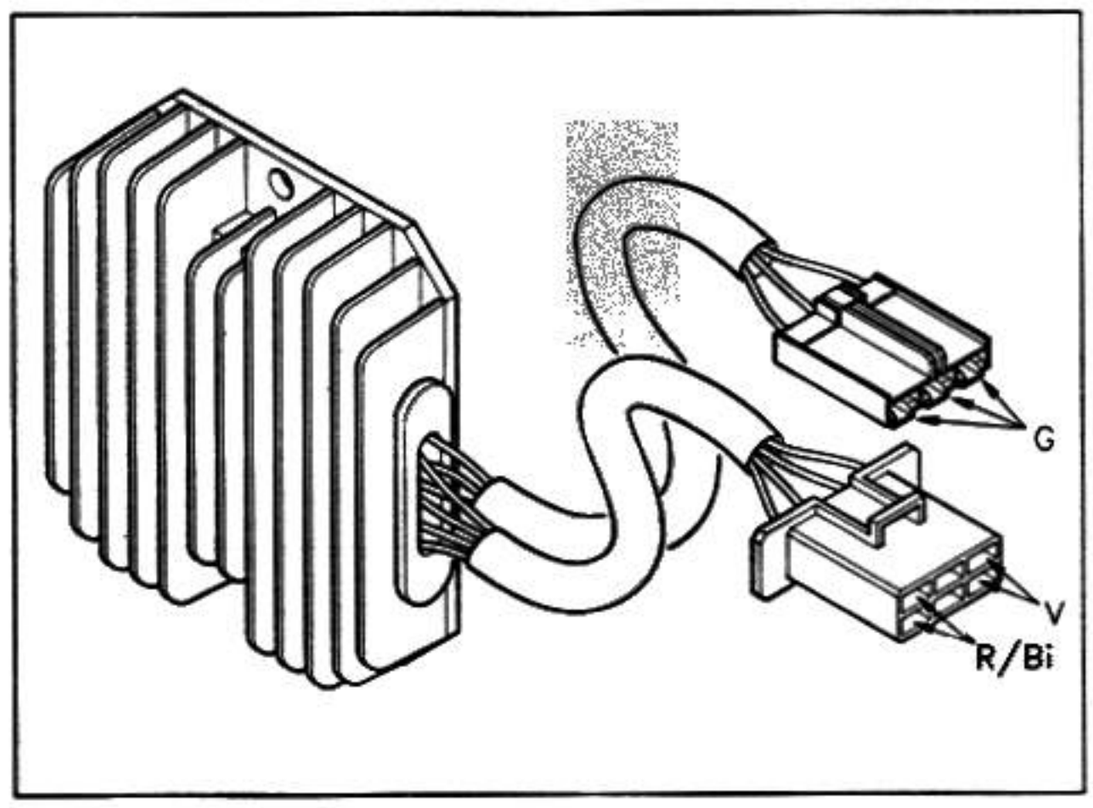

Negative terminal (-) of the tester on:	Positive terminal (+) of the tester on: G	G	G	V	R/Bi
G		∞	∞	2 - ∞	∞
G	∞		∞	2 - ∞	∞
G	∞	∞		2 - ∞	∞
V	∞	∞	∞		∞
R/Bi	2 - ∞	2 - ∞	2 - ∞	3 - ∞	

⚠ WARNING

This measurement method is only approximate; if possible, make sure the charger is in good working order by using another regulator you know functions properly.

If the resistance measured is incorrect, replace the voltage regulator (3).

6.4 INJECTION SYSTEM

6.4.1 FUEL INJECTION WIRING DIAGRAM

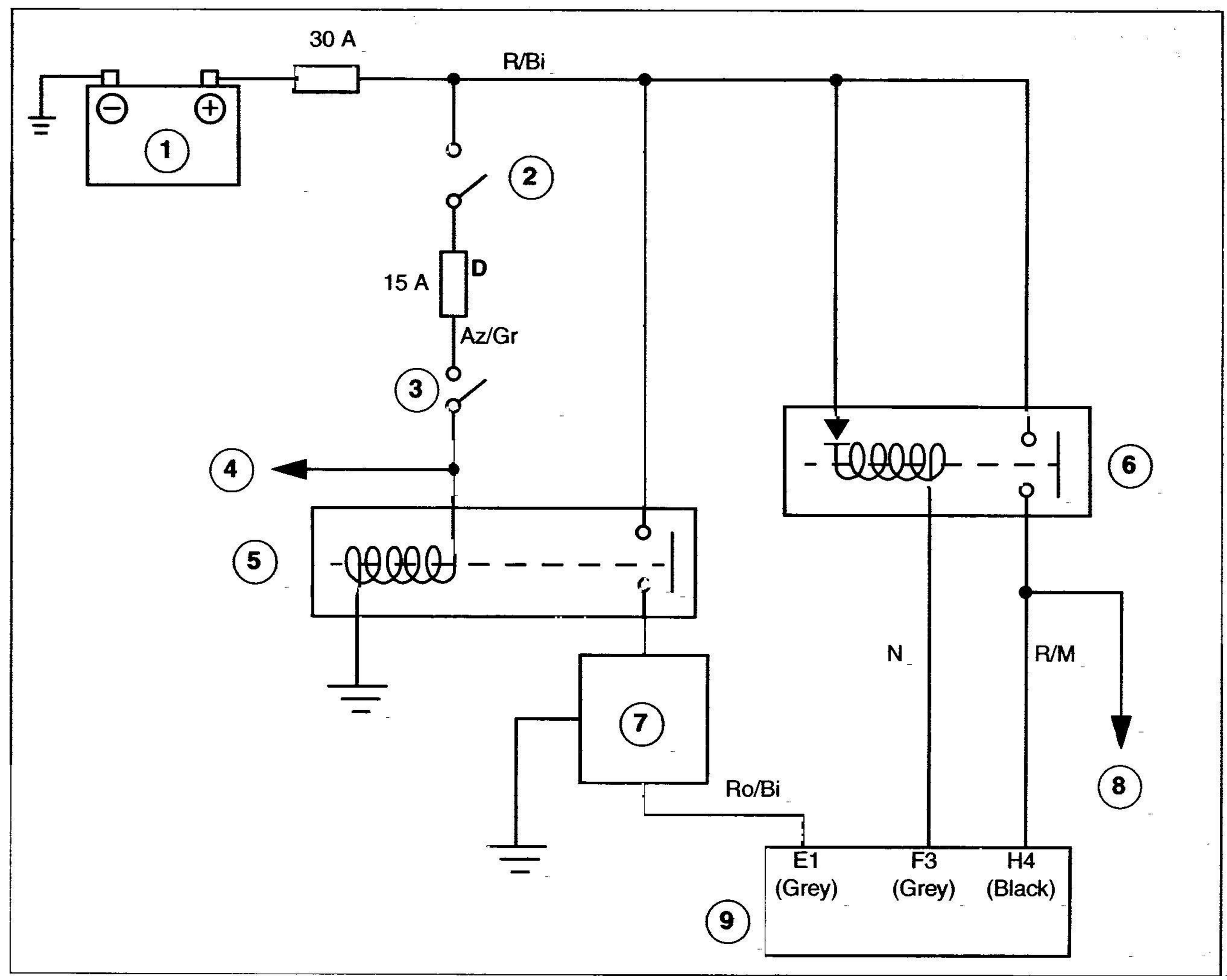

Legend:

1) Battery
2) Key
3) Kill switch
4) Starter button
5) Engine stop relay
6) Injection relay
7) Overturn sensor
8) Purge valve coil fan injector power USA.
9) ECU

6.4.2 TROUBLESHOOTING

- Make sure that the 30-A main fuse and the 15-A fuse "D" are intact.
- Make sure the kill switch device is working properly, see 6.8 (IGNITION SAFETY SYSTEM) as well as the key, see 6.5 (IGNITION/INJECTION SYSTEM).
- Make sure the engine stop relay is in good working order, see 6.7.3 (CHECKING THE FUEL PUMP RELAY).
- Check the injection relay, see 6.4.3 (CHECKING THE INJECTION RELAY).
- Check the overturn sensor, see 6.4.4 (CHECKING THE OVERTURN SENSOR).

6.4.3 CHECKING THE INJECTION RELAY

To check the relay:

- Remove the left fairing, see 7.1.28 (REMOVING THE SIDE FAIRINGS).
- Power the two male terminals (85-86) with a voltage of 12 V.
- Use a tester (in ohm meter mode) to check the continuity between the other two terminals (87-30).

Correct value with relay energized: 0 Ω
Correct value with relay not energized: ∞ Ω

If the values do not match those indicated, replace the relay in question.

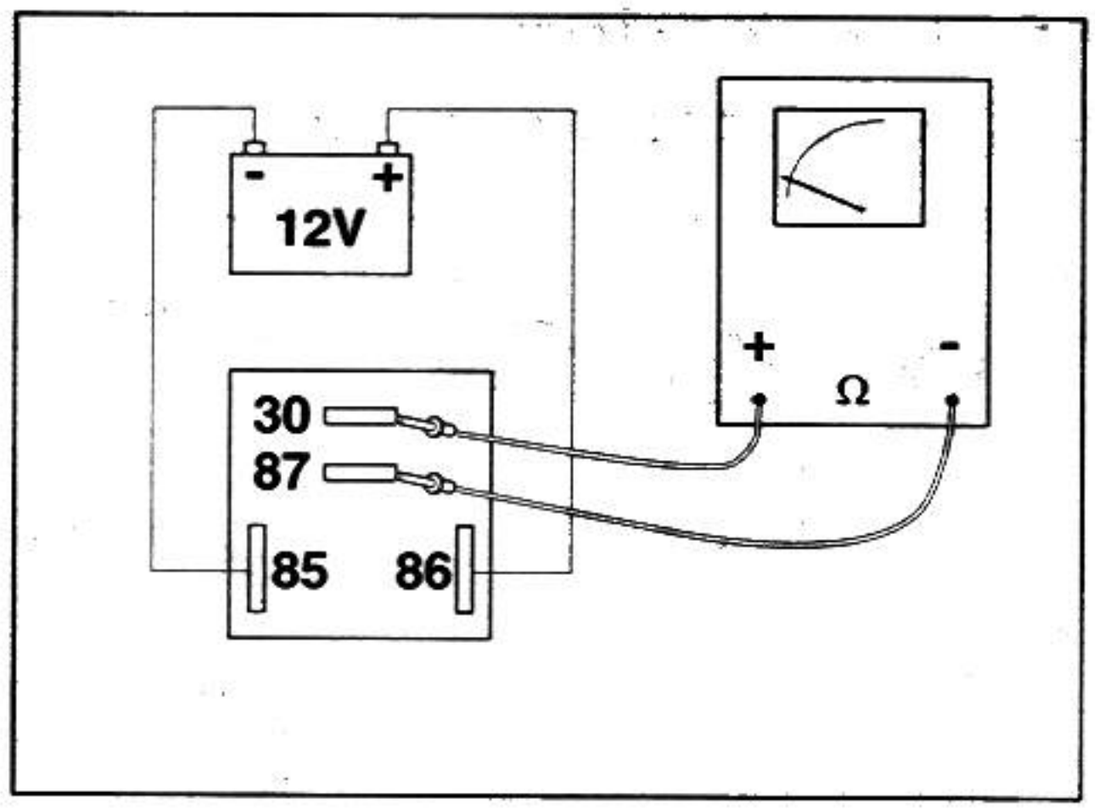

⚠ WARNING

Observe the polarity, connecting the "+" pole to terminal (86) and the "-" pole to terminal (85); there is a diode inside.

6.4.4 CHECKING THE OVERTURN SENSOR

- Remove the front fairing, see 7.1.20 (REMOVING THE FRONT FAIRING).

⚠ WARNING

Have ready a bulb, max. 12 V/2W

- Prepare a circuit like the one shown in the figure.
- Close the switch "A" with the sensor set to horizontal; the bulb "B" will light.

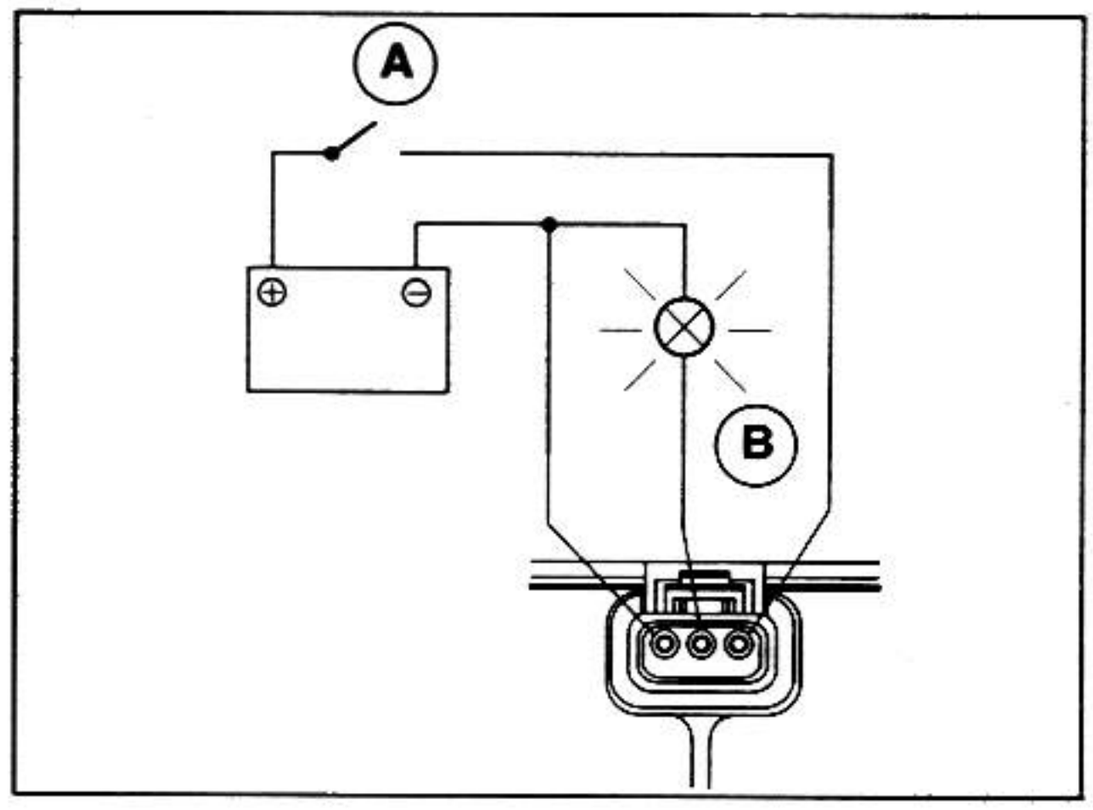

- Tilt the sensor by an angle greater than 60°; the bulb should turn off.
- Repeat the operation for the other side of the sensor. To turn the bulb back on, open and close the switch "A".

NOTE If the sensor does not work as described above, replace it with a new one of the same type.

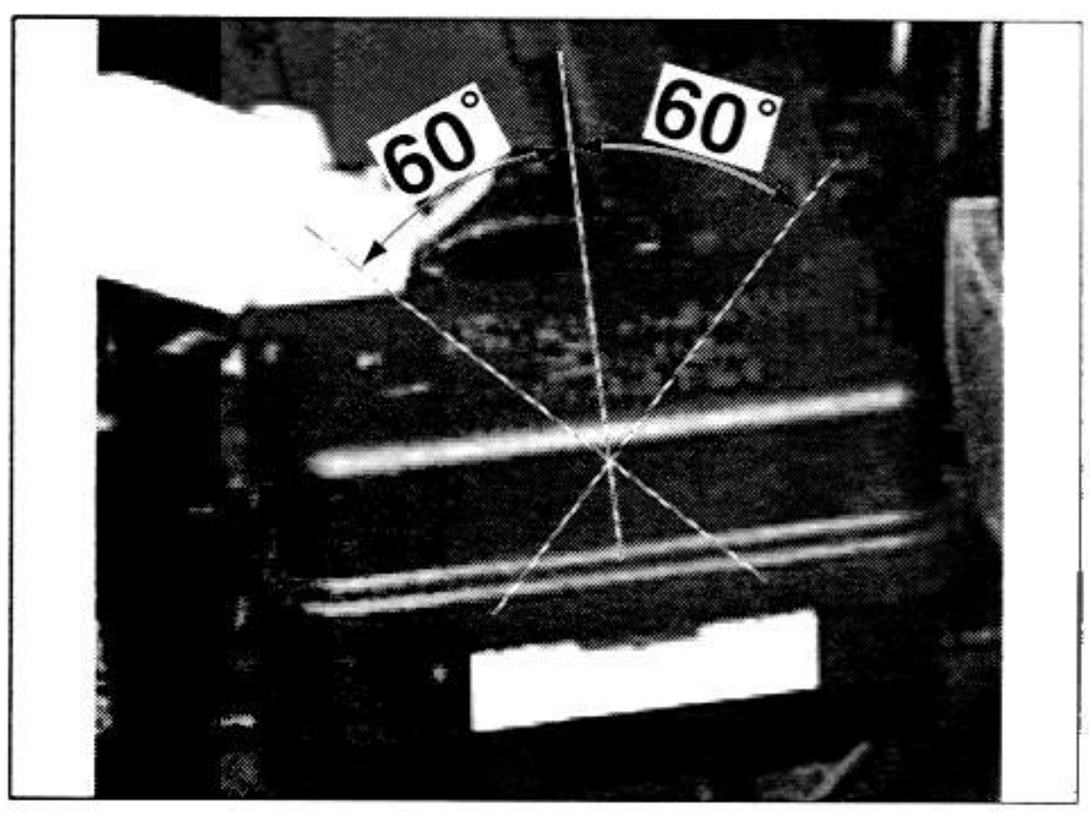

6.5 IGNITION/INJECTION SYSTEM

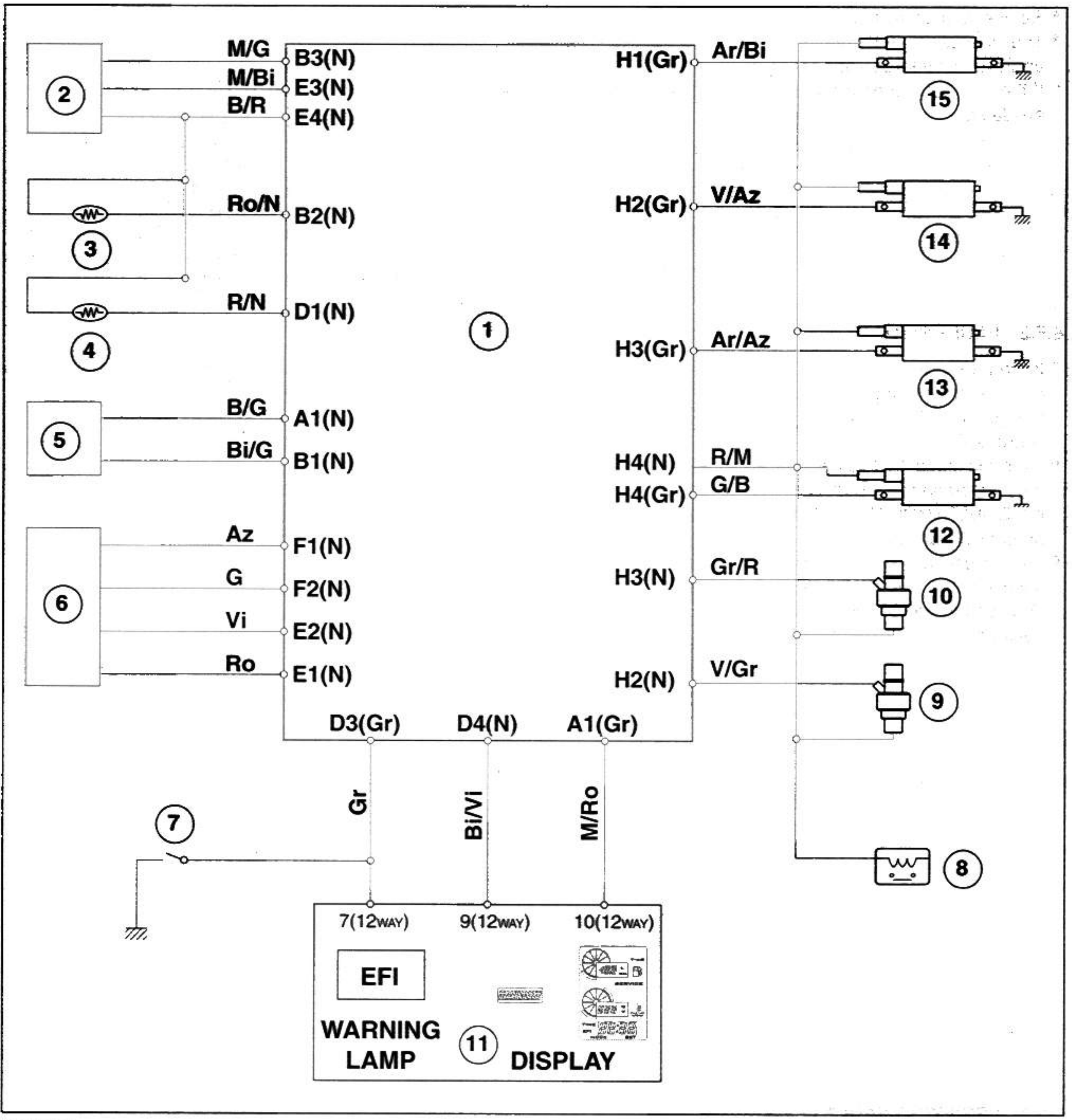

Legend

1) Electronic control unit (ECU)
2) Throttle sensor
3) Coolant thermistor
4) Injection air thermistor
5) rpm sensor
6) Choke motor
7) Test connector
8) Injection relay
9) Rear cylinder injector
10) Front cylinder injector
11) Dashboard
12) Rear cylinder coil - center spark plug
13) Rear cylinder coil - side spark plug
14) Front cylinder coil - side spark plug
15) Front cylinder coil - center spark plug

6.5.1 TROUBLESHOOTING

- Place the vehicle on the stand.
- Set the ignition switch to "◯".
- The message "EFI" will appear on the display for approximately three seconds.
- If the LED "EFI" turns off, the control unit has not found any faults.

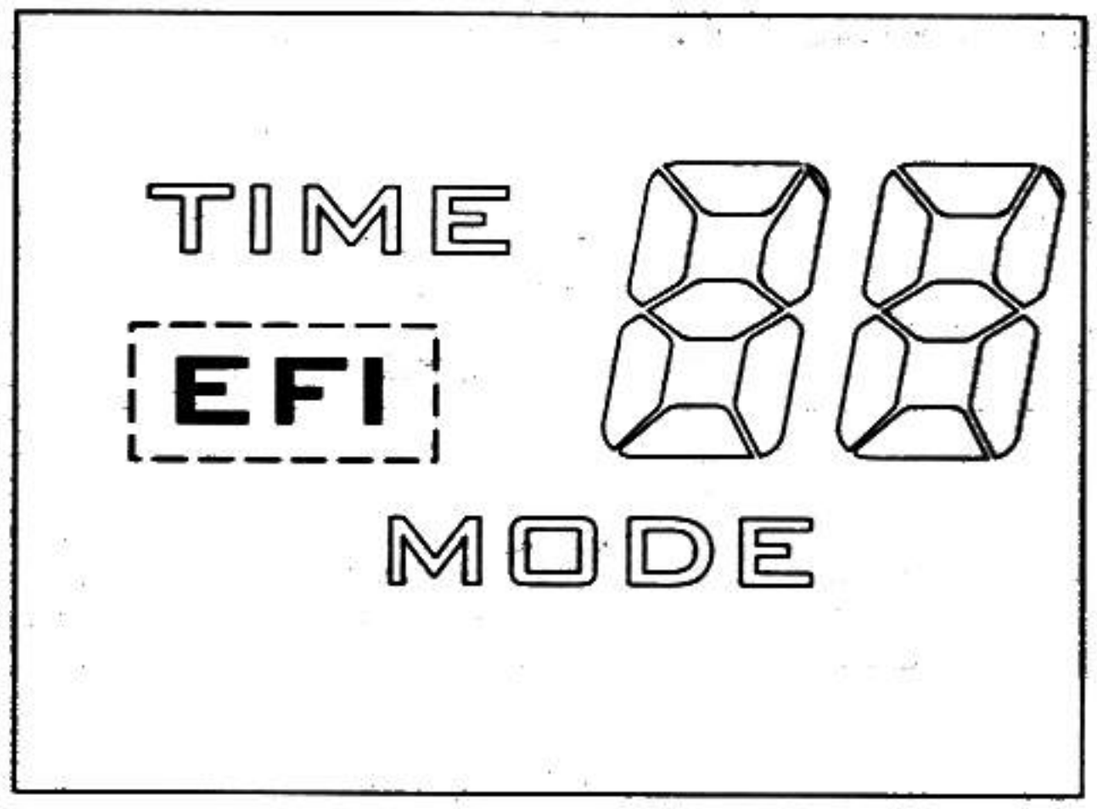

6.5.2 FAULT SITUATIONS

- If the message "EFI" remains lit and the message "off", even after carrying out the operations described in paragraph 6.5.1 (TROUBLESHOOTING), the battery is probably low.
- if the message "EFI" remains lit, even after carrying out the operations described in paragraph 6.5.1 (TROUBLESHOOTING), the engine may be switched on but will not start.
- if the message "EFI" continues to flash even after you have carried out the operations described in 6.5.1 (TROUBLESHOOTING), proceed with checking the sensors.

6.5.3 VERIFYING FAULT CODES

- Raise the saddle, see 7.1.1 (REMOVING THE SADDLE).
- Connect together the two TEST connectors (1), located on the right-hand side of the motorcycle.
- Check on the dashboard, in the clock face, to see which numerical indications appear.
- Check the following table to determine which problem each fault code refers to.

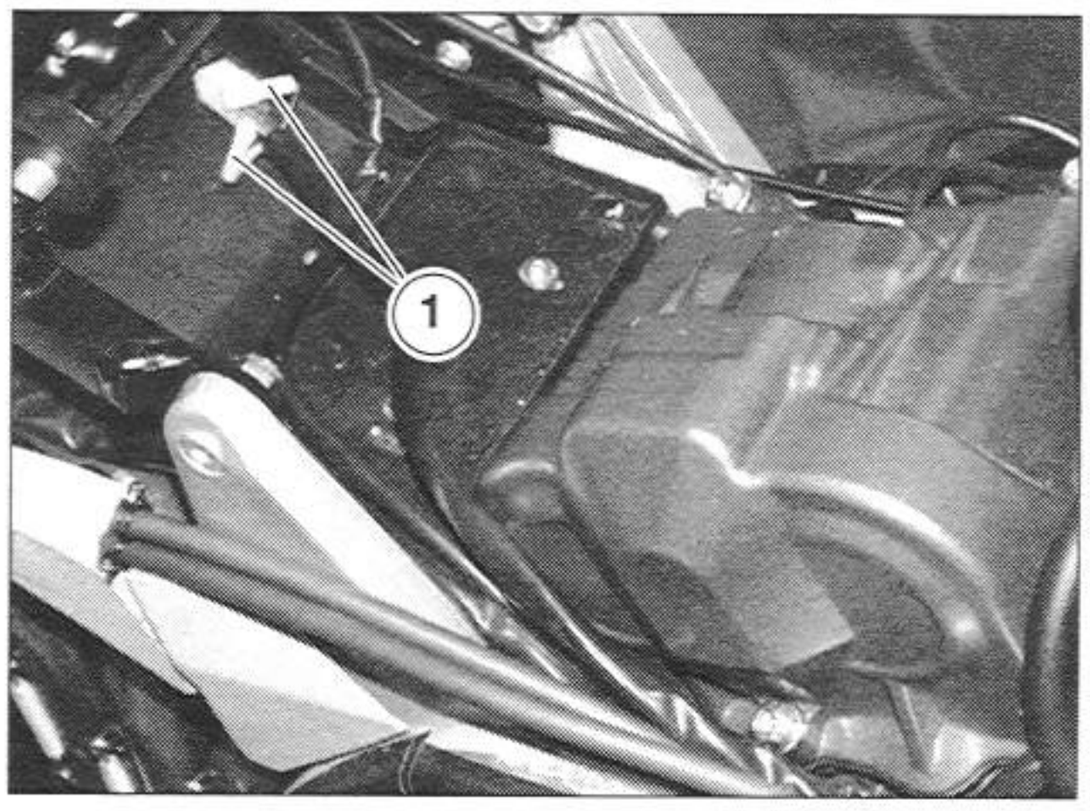

FAULT CODE TABLE:

FAULT CODE	COMPONENT	CAUSE
12	Crankshaft position sensor (pick-up)	– Sensor not connected. – Sensor broken. – Faulty wiring.
15	Throttle position sensor (TPS)	
21	Engine temperature sensor	
22	Air temperature sensor	
23	Barometric pressure sensor	Sensor faulty.
33	Coil 1	Coil not working or not wired
34	Coil 2	
35	Coil 3	
36	Coil 4	
42	Injector 1	– Injector not working or not wired.
43	Injector 2	

6.5.4 TROUBLESHOOTING IN THE ELECTRONIC SYSTEM USING DISPLAYED INFORMATION

⚠ WARNING

Take care around the high voltage in the ignition system.
Never disconnect the connections with the engine running.
Whenever working on the ignition system, unless otherwise indicated, always leave the ignition switch set to "⊗" and the battery disconnected (when disconnecting the battery, disconnect the negative pole (-) first).

⚠ WARNING

All measurements should be taken with components at a temperature of 20°C (68°F). General troubleshooting instructions: as soon as you have identified the fault, remove the defective component.

Carry out the checks described in the following chapters:
- 6.6.7 (CHECKING THE CRANKSHAFT POSITION SENSOR);
- 6.6.3 (CHECKING THE THROTTLE VALVE POTENTIOMETER);
- 6.6.5 (CHECKING THE COOLANT THERMISTORS OPERATION).

If the engine does not start and the diagnostics system detects no fault, check, in the order listed, whether:
- the fuel pump is working properly, see 6.7.2 (CHECKING THE FUEL PUMP);
- the injectors are working properly, see 6.6.1 (CHECKING THE INJECTORS);
- the antitheft setup connector (located under the passenger saddle, white) is connected properly;
- the ignition switch is working properly, see 6.13.2 (SWITCHES);
- the engine stop switch is working properly, see 6.13.2 (SWITCHES);
- the 30-A main fuses and 15-A secondary fuses are intact, see 6.16 (CHANGING FUSES);
- the engine stop relay is working properly, see 6.5.4 (TROUBLESHOOTING IN THE ELECTRONIC SYSTEM USING DISPLAYED INFORMATION);
- the battery is working properly, see 2.4 (BATTERY)and 6.14 (BATTERY);
- the safety operating logic is working properly, see 6.8 (IGNITION SAFETY SYSTEM);
- the overturn sensor is working properly, see 6.4.4 (CHECKING THE OVERTURN SENSOR).

6.6 CONNECTIONS TO THE ELECTRONIC CONTROL UNIT

NOTE For the locations of the components, see 6.1 (LOCATIONS OF ELECTRICAL COMPONENTS).
For more information see 4.7.4 (ELECTRONIC CONTROL UNIT).

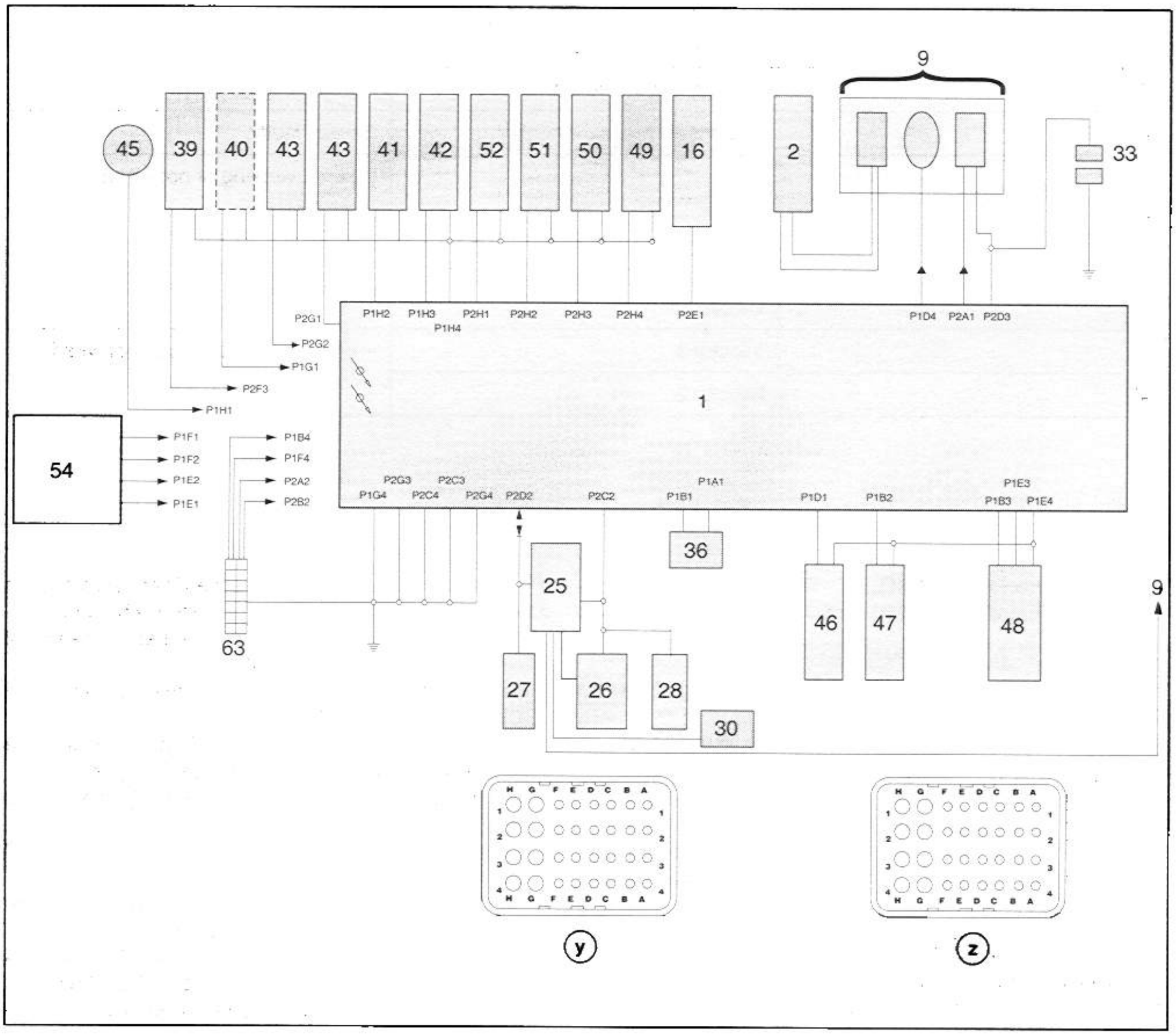

NOTE The abbreviations (y) and (z) that appear alongside the numbers in the diagram, mark corresponding terminals on both connectors.

Y) Electronic control unit connector (26-way).
Z) Electronic control unit connector (16-way).

Position	Component	Connector	Terminal #	Rated value	Wire Color
9	Dashboard	P1	D4		Bi/Vi
		P2	A1		M/Ro
15	Overturn sensor	P2	E1		Ro/Bi
16	Fuel pump relay	P2	E1	–	Ro/Bi
25	Diode module	P2	C2		M/V
		P2	D2		M
26	Clutch switch	P2	C2		M/V
27	Neutral gear switch	P2	D2		M
28	Side stand	P2	C2		M/V
30	Start relay	–	–		–
33	TEST connectors	P2	D3	–	Gr
36	Crankshaft position sensor	P1	B1	150 - 300 Ω	Bi/G
		P1	A1		B/G
39	Injection relay	P1	H4		M/R
		P2	F3		N
40	Purge Valve (Calif only)	P1	G1		M/Vi
		P1	H4		M/R
41	Rear cylinder injector	P1	H4	11 - 17 Ω	M/R
		P1	H2		V/Gr
42	Front cylinder injector	P1	H4	11 -17 Ω	M/R
		P1	H3		Gr/R
43	Electric fans	P1	H4		M/R
		P2	G2		G/N
		P2	G1		G/N
45	Gasoline pump	P1	H1		B/Bi
46	Air thermistor	P1	E4	–	B/R
		P1	D1		R/N
47	Coolant thermistor	P1	E4	1,9 - 2,9 kΩ	B/R
		P1	B2		Ro/N
48	Throttle valve potentiometer	P1	E4	2,8 - 3,4 kΩ (variable depending on the angle)	B/R
		P1	E3		M/Bi
		P1	B3		M/G
49	Rear cylinder coil	P1	H4	4 - 5 Ω	M/R
		P2	H4		G/B
50	Rear cylinder coil	P1	H4	4 - 5 Ω	M/R
		P2	H3		Ar/Az
51	Front cylinder coil	P1	H4	4 - 5 Ω	M/R
		P2	H2		V/Az
52	Front cylinder coil	P1	H4	4 - 5 Ω	M/R
		P2	H1		Ar/Bi
54	Engine idle setting	P1	F1		Az
		P1	F2		G
		P1	E2		Vi
		P1	E1		Ro
63	Diagnostic connector	P1	G4		B/V
		P1	B4		B/N
		P1	F4		Vi/M
		P2	A2		B/Ar
		P2	B2		Gr/Bi

6.6.1 CHECKING THE INJECTORS

With the engine off:

- Raise the fuel tank, see 2.8 (LIFTING THE FUEL TANK).

NOTE The following steps refer to a single injector, but are applicable to both.

- Disconnect the two-way connector (1) (black) and measure (on the injector side terminals).
- Use a tester (scale x100 Ω), to measure the resistance between the injector terminals.

Standard value: 11.5 – 13 Ω at 20 °C (68 °F).

If the resistance is infinite (∞) or below the prescribed value, the injector (2) must be replaced.

- Repeat the operations for the other injector.

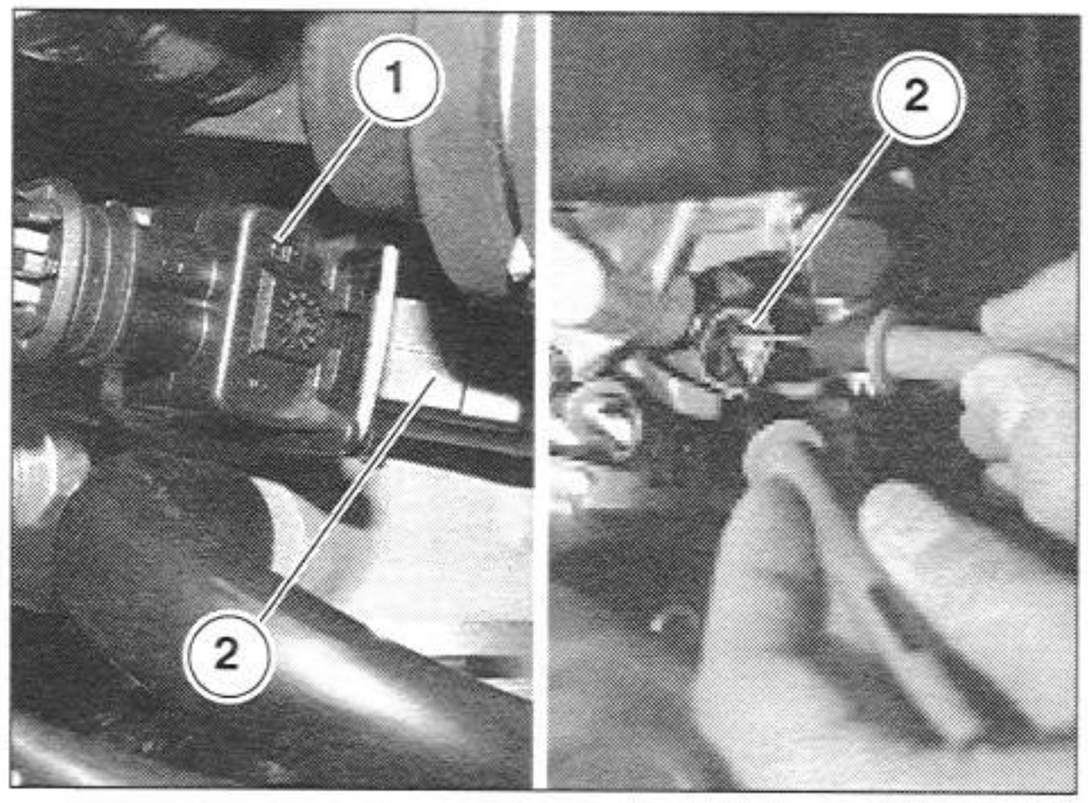

6.6.2 CHOKE MOTOR

- Raise the air filter case, see 7.1.8 (REMOVING THE AIR FILTER CASE).

NOTE The stepper motor opens and closes the air passages, to alter the air/gasoline mixture as needed. Make sure the stepper motor (2) is working properly:

- Unscrew and remove the two screws (1) and detach it from the filter case.
- Set the key to "○" and then immediately to "⊗". After you have set the key to "⊗", the white cylinder comes all the way out (approximately 1.12 in), then returns in by a few millimeters (approximately 0.77 in), performing an automatic setting.
- If this does not occur, check using a tester as an ohm meter to measure the resistance between the two coils:
  - between pins A and D, correct measurement: 50 Ω ±10%;
  - between pins B and C, correct measurement: 50 Ω ±10%;
  - between the other pins, infinite resistance (∞).

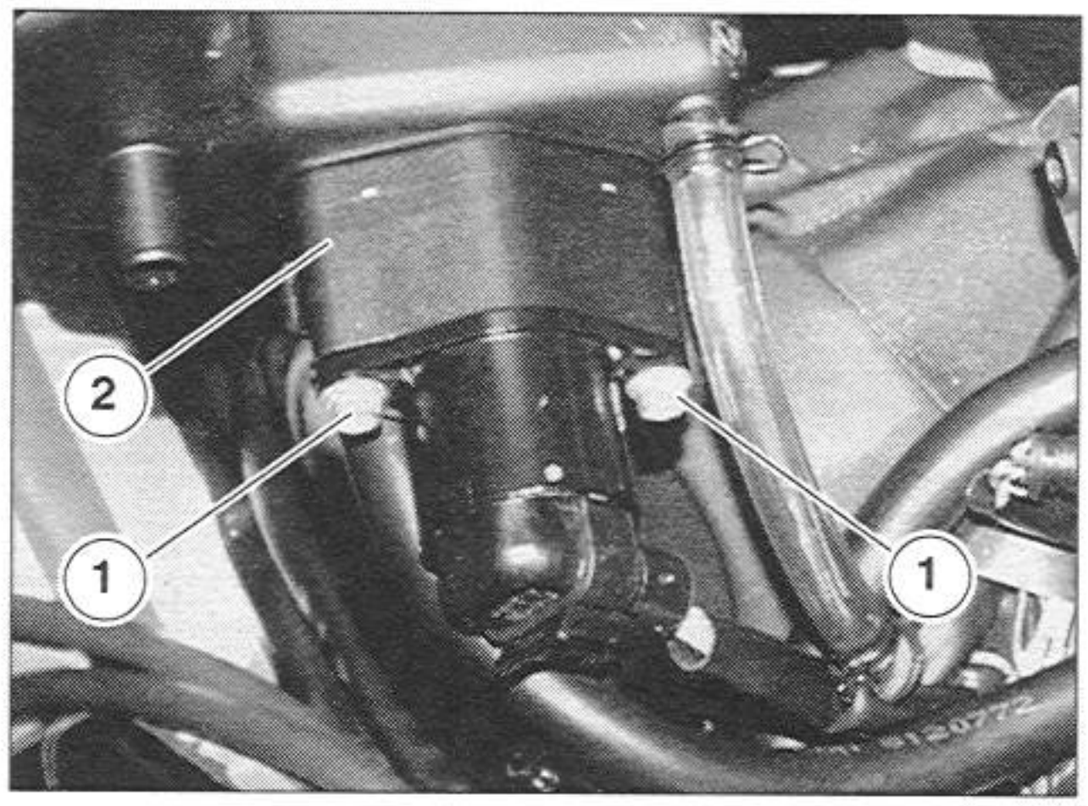

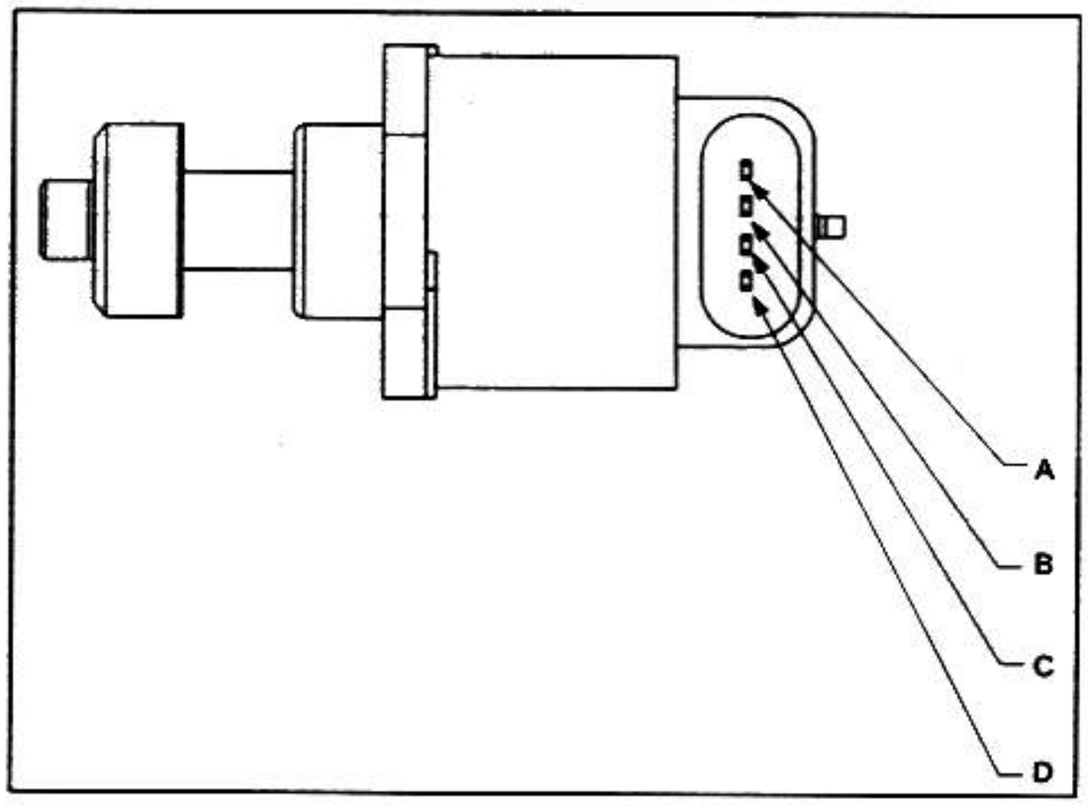

6.6.3 CHECKING THE THROTTLE VALVE POTENTIOMETER

With the engine off:

- Raise the fuel tank, see 2.8 (LIFTING THE FUEL TANK).
- Disconnect the three-way connector (black) (1).

⚠ WARNING

When reassembling, make sure the electrical connector (1) is properly connected.

- Set the ignition switch to "⊗".
- Use a tester (scale Ω) to measure the resistance between the terminals of the potentiometer (2).

MEASUREMENT (A)

Resistance between the two terminals A and B, regardless of the position of the throttle valves:

Standard value: 1.2 kΩ ± 10%.

MEASUREMENT (B)

Resistance between the terminals, A and C:

With throttle valves completely closed, accelerating gradually until they are fully open, the resistance will change as follows.

Standard value: from 1.2 kΩ to 2.4 kΩ ± 10%.

NOTE To make it easier to unscrew the two screws (3), which are cemented with LOCTITE® 243, heat them first with a blast of warm air.

- Unscrew and remove the screws (3).
- Remove the potentiometer (2).

If the resistance values differ from those prescribed, replace the potentiometer (2).

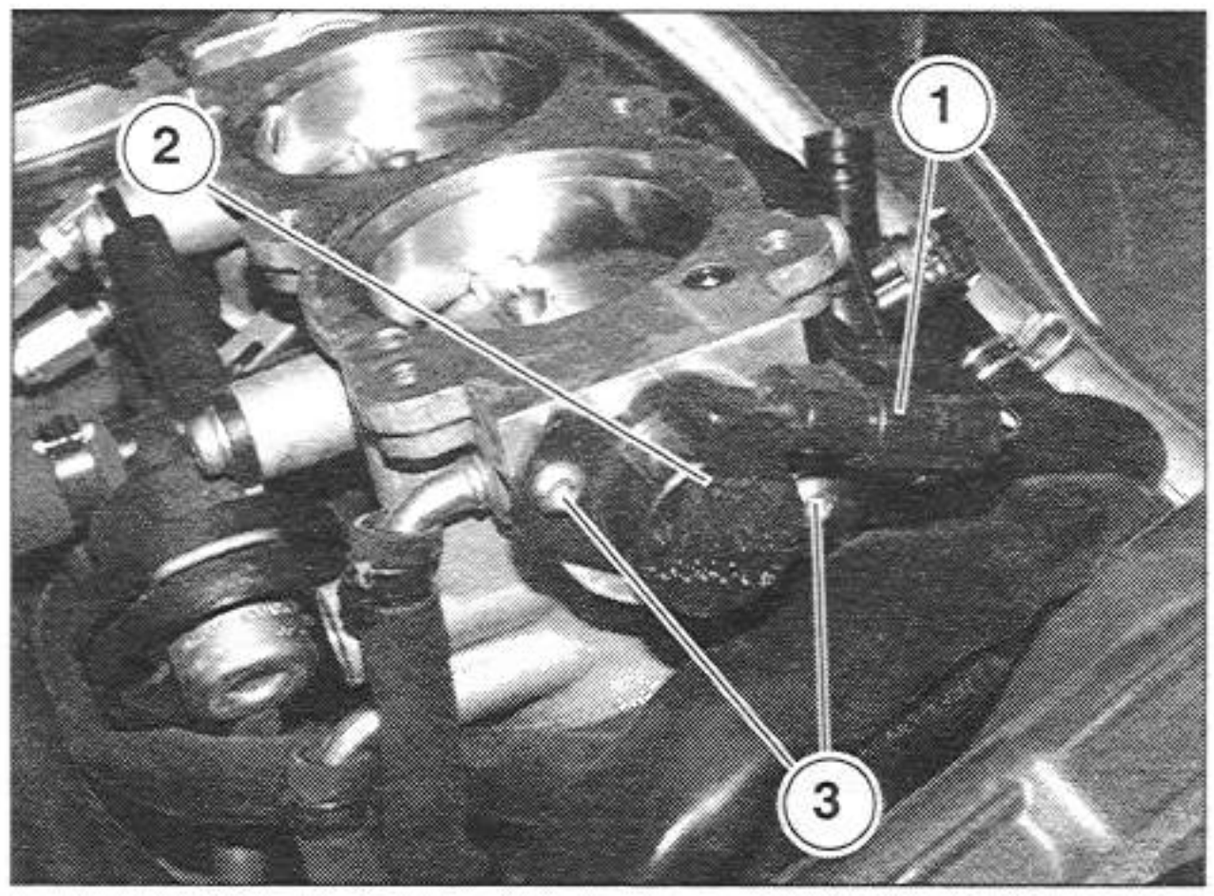

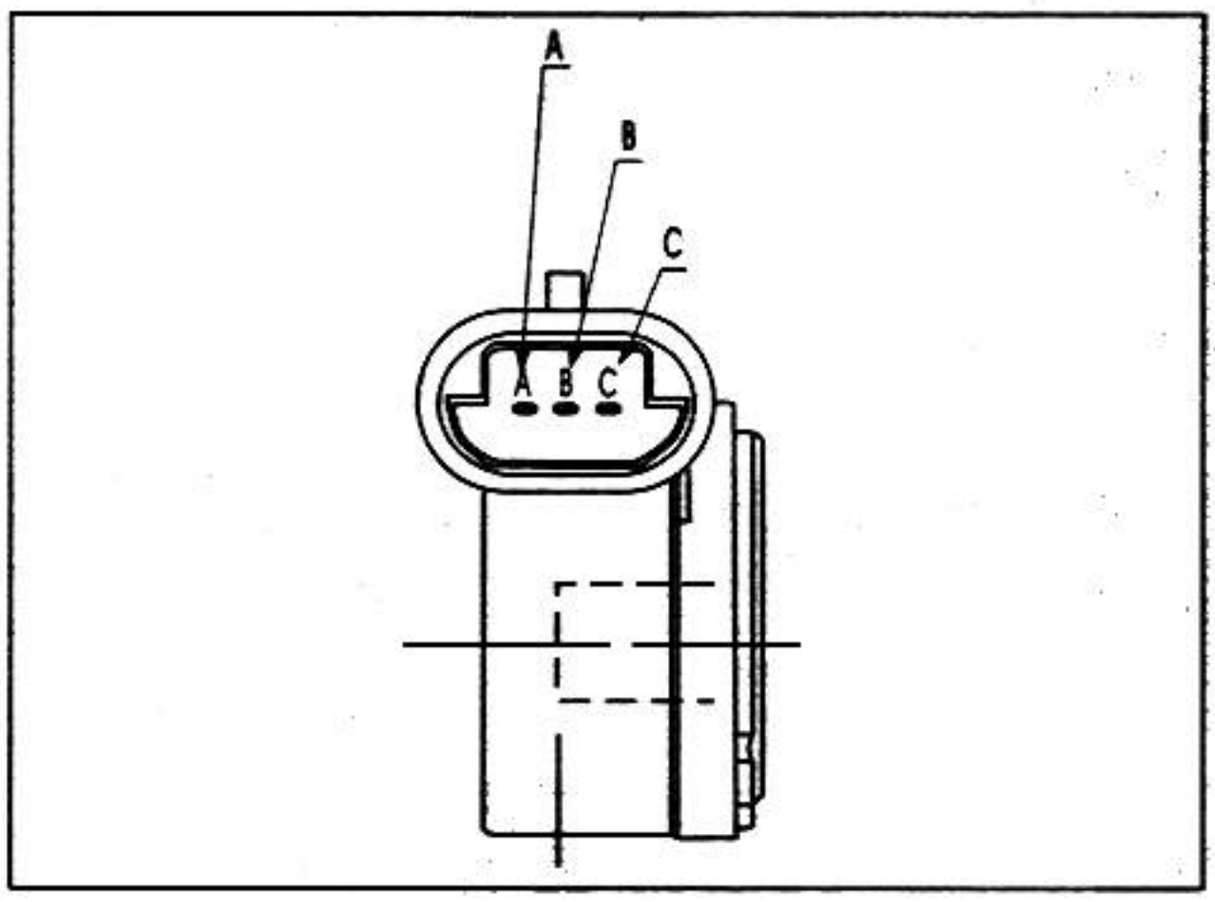

6.6.4 CHECKING THE AIR THERMISTOR OPERATION

- Remove the left fairing, see 7.1.28 (REMOVING THE SIDE FAIRINGS).
- Disconnect the two-way connector (1) (green).

⚠ WARNING

When reassembling, make sure the electrical connector (1) is properly connected.

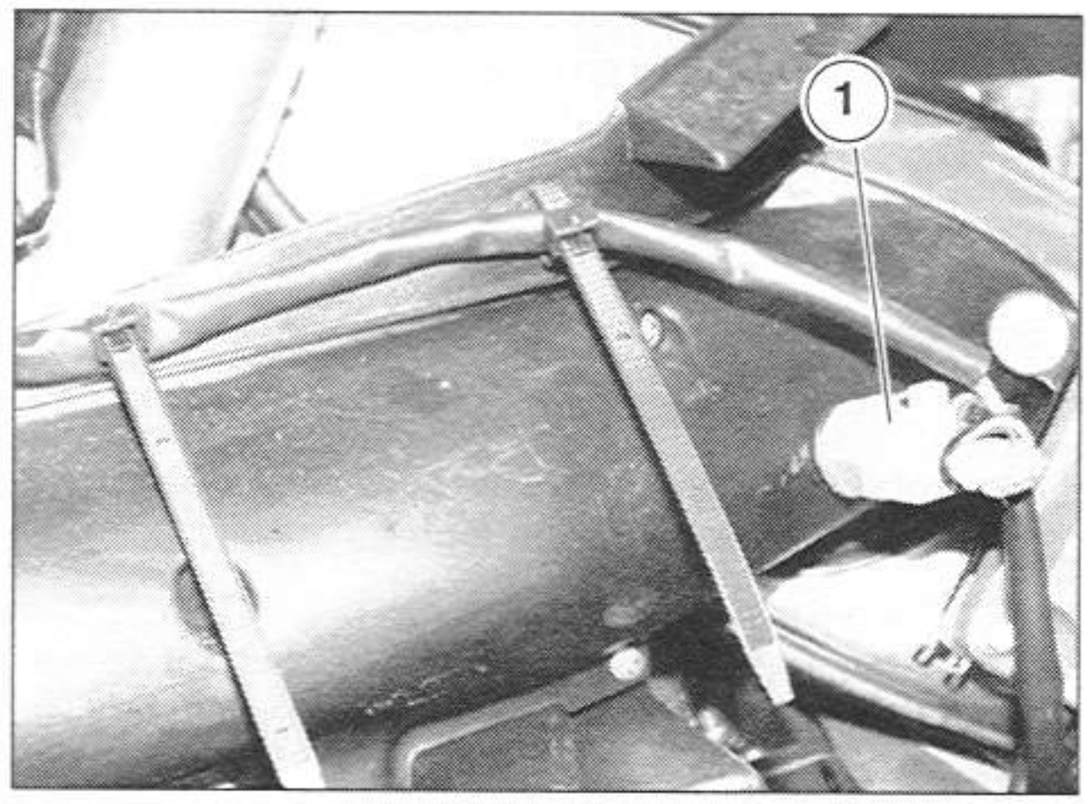

- Remove the thermistor (2).
- As shown in the figure, connect a tester (3) (in ohm meter mode) to the thermistor (2).
- Immerse the thermistor (4) in a container (3) of water.
- In the same container, immerse a thermometer (5) with a range of 0 -150°C (32 -302°F).
- Place the container on a burner (6) and slowly heat the fluid.
- Check the temperature shown on the thermometer (5) and the thermistor value shown on the tester.

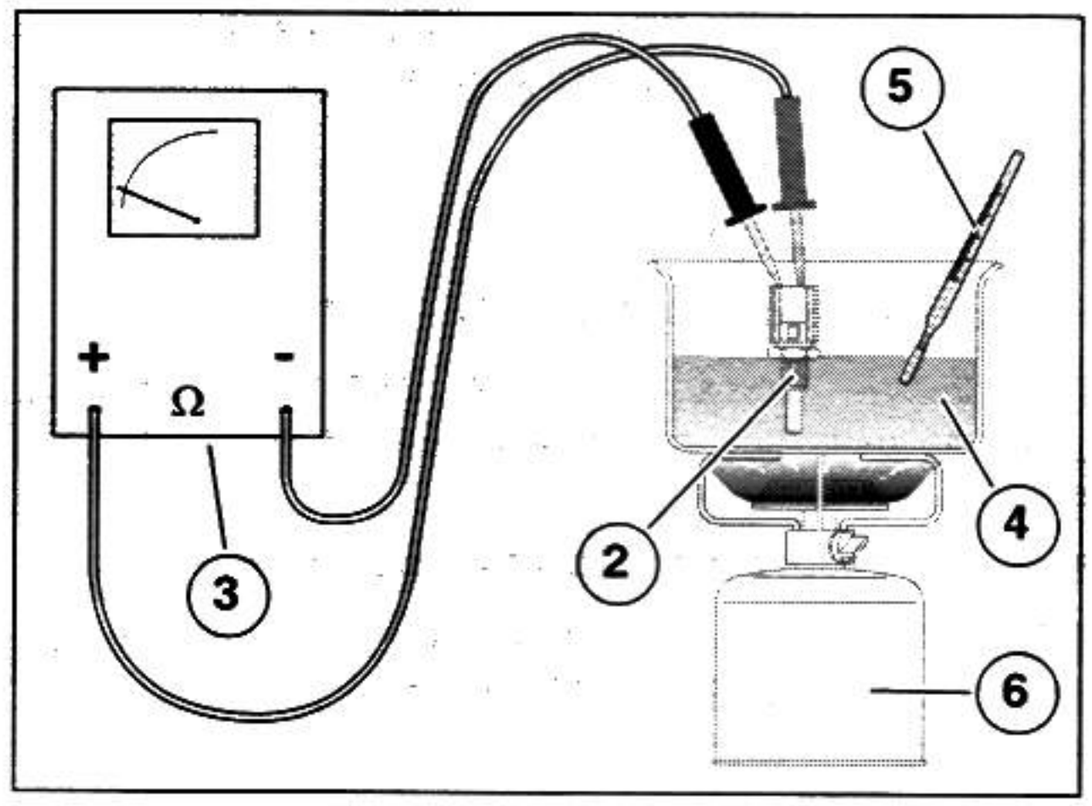

Make sure that the value changes based on temperature, as indicated.

Water temperature		Standard values (W) (± 10%)
(°C)	(°F)	
0	32	5457
20	68	2375
40	104	1111
60	140	563,8
80	176	306,4
100	212	176,7

If the values do not change, or differ too much from those given in the table, replace the thermistor (2).

6.6.5 CHECKING THE COOLANT THERMISTORS OPERATION

NOTE The temperature measured by the front cylinder thermistor (right side) is sent to the right display; the one measured by the rear cylinder thermistor (left side) is sent to the electronic control unit.

- Remove the thermistor (1), see 5.4 (REMOVING THE COOLANT THERMISTORS.).
- As shown in the figure, connect a tester (2) (in ohm meter mode) to the thermistor (1).
- Immerse the thermistor (1) in a container (3) containing coolant.
- In the same container, immerse a thermometer (4) with a range of 0 -150°C (32 -302°F).
- Place the container on a burner (5) and slowly heat the fluid.
- Check the temperature shown on the thermometer (4) and the thermistor (1) value shown on the tester.

Make sure that the value changes based on temperature, as indicated.

Water temperature		Standard values (W) (± 10%)
(°C)	(°F)	
0	32	5896
20	68	2500
40	104	1175
60	140	595,5
80	176	322,5
100	212	186,6

If the values do not change, or differ too much from those given in the table, replace the thermistor (1).

- Repeat the operations for the other thermistor.

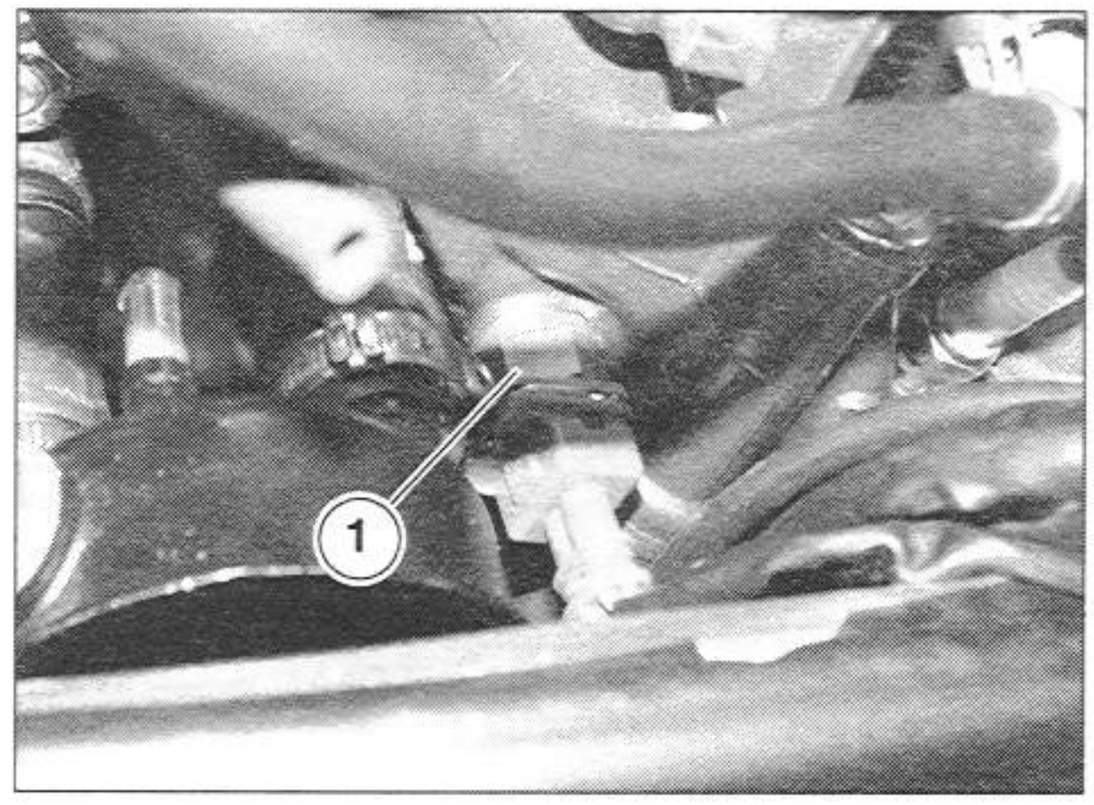

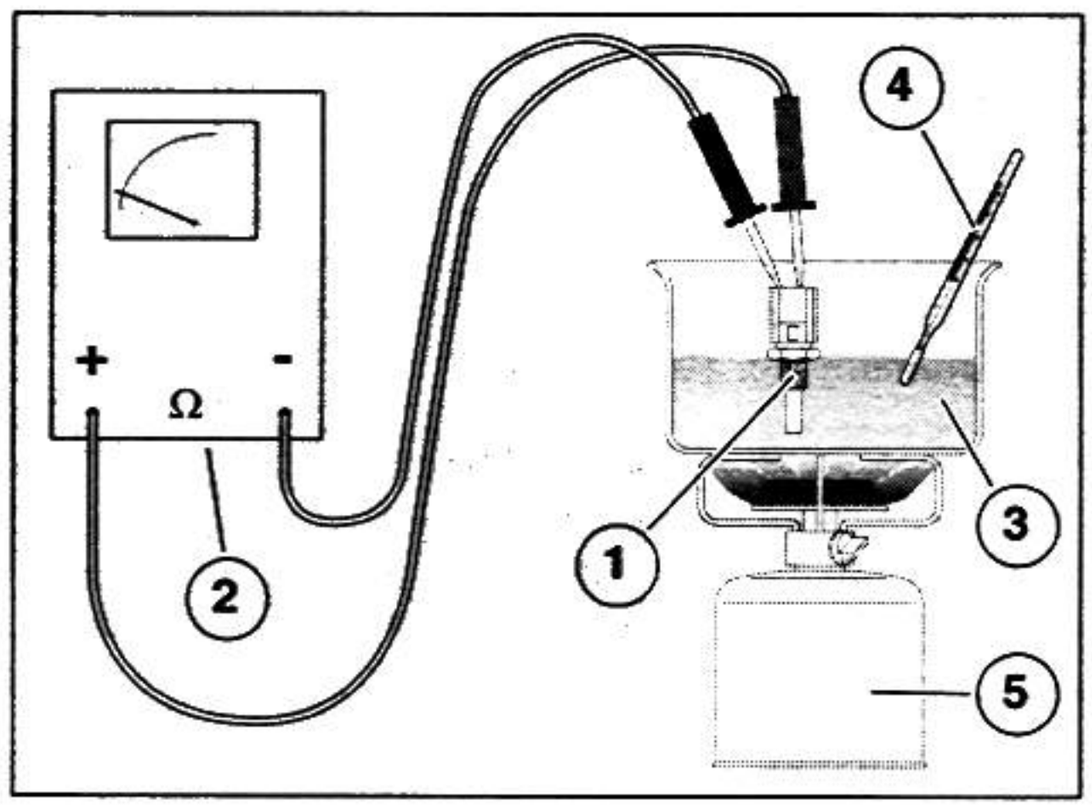

6.6.6 CHECKING THE IGNITION COILS

- Remove the fuel tank, see 7.1.6 (REMOVING THE FUEL TANK COMPLETELY).

NOTE The following steps refer to a single coil, but are valid for all.

- Disconnect the connector (1) from the coil ignition (2).

⚠ WARNING

When reassembling, make sure the electrical connector (1) is properly connected.

- Pull the cable from the coil (2).
- Use a tester to measure (A) and (B) as shown in the figure.

It is necessary to check the continuity of the primary and secondary windings.
It is not necessary that the Ohm reading be precise, but if the windings are intact, the resistance values must approximately match those indicated.

Standard values:
measurement (A): 0.6 Ω ± 10%
measurement (B): 10 kΩ ± 10%

⚠ WARNING

This measurement method is only approximate; if possible, make sure the coil is in good working order by using another one you know functions properly.

- Repeat the operations for the other coils.

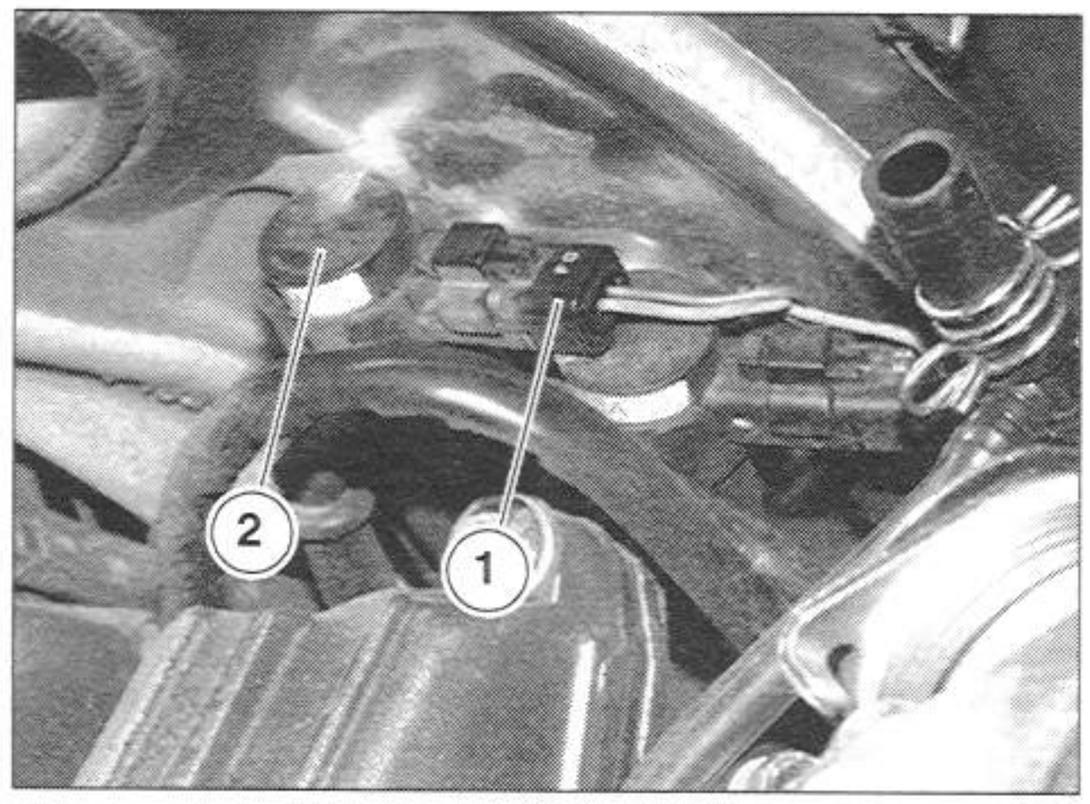

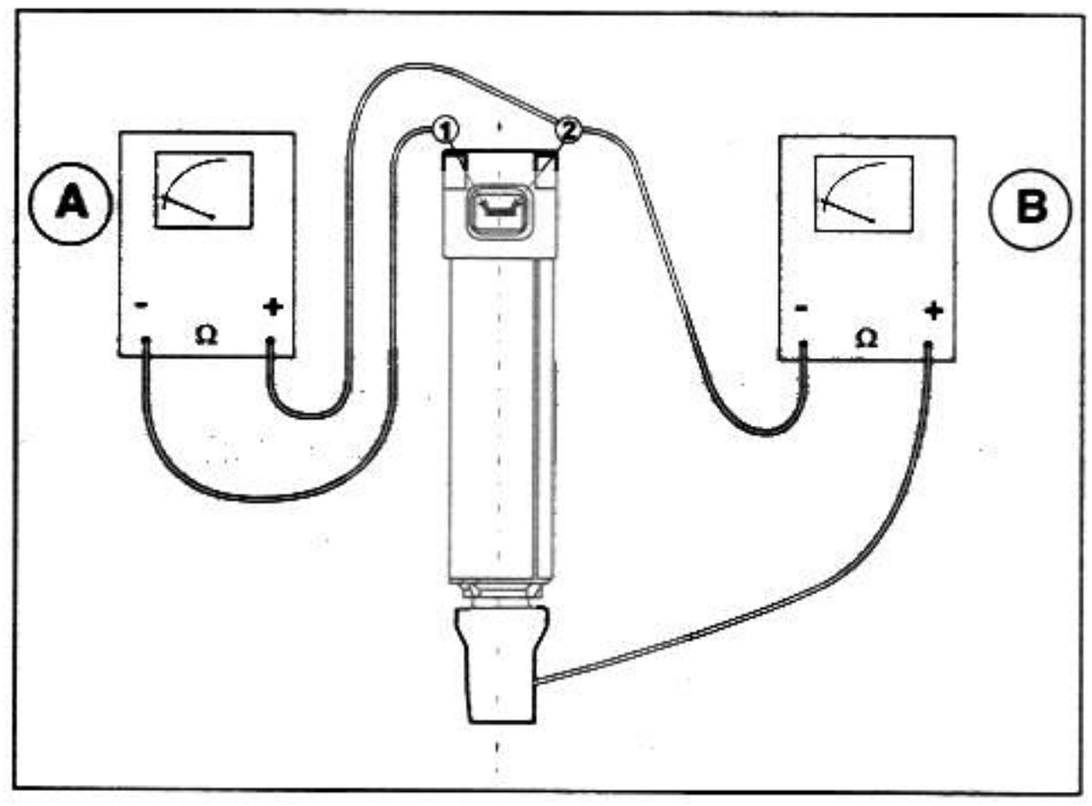

6.6.7 CHECKING THE CRANKSHAFT POSITION SENSOR

With the engine off:

- Remove the left fairing, see 7.1.28 (REMOVING THE SIDE FAIRINGS).
- Disconnect the two-way connector and take the measurements directly on the sensor.
- Use a tester (scale x 1000 Ω) to measure the resistance between the terminals of the sensor, observing the polarity as shown in the figure.

Standard value: 560 Ω ± 10%

- If the resistance is infinite or different from the prescribed value, the sensor must be replaced.

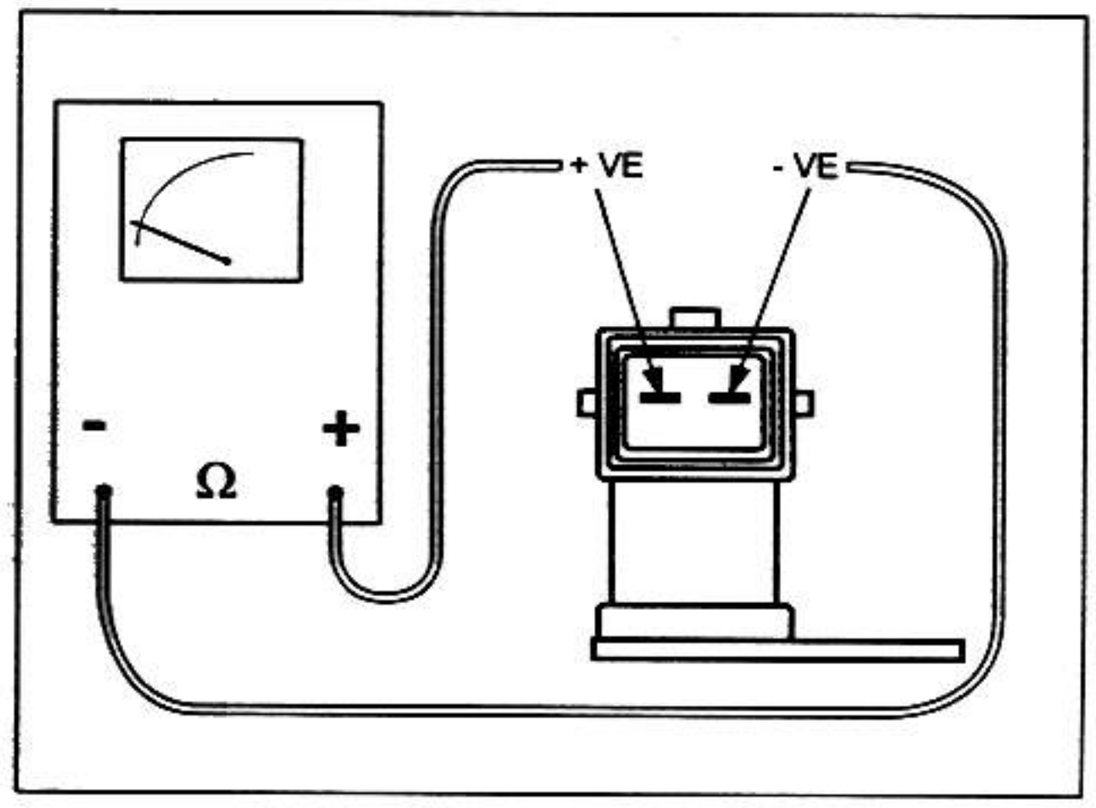

6.7 FUEL PUMP SYSTEM

6.7.1 WIRING DIAGRAM

NOTE For the positions of the components, see 6.1 (LOCATIONS OF ELECTRICAL COMPONENTS).

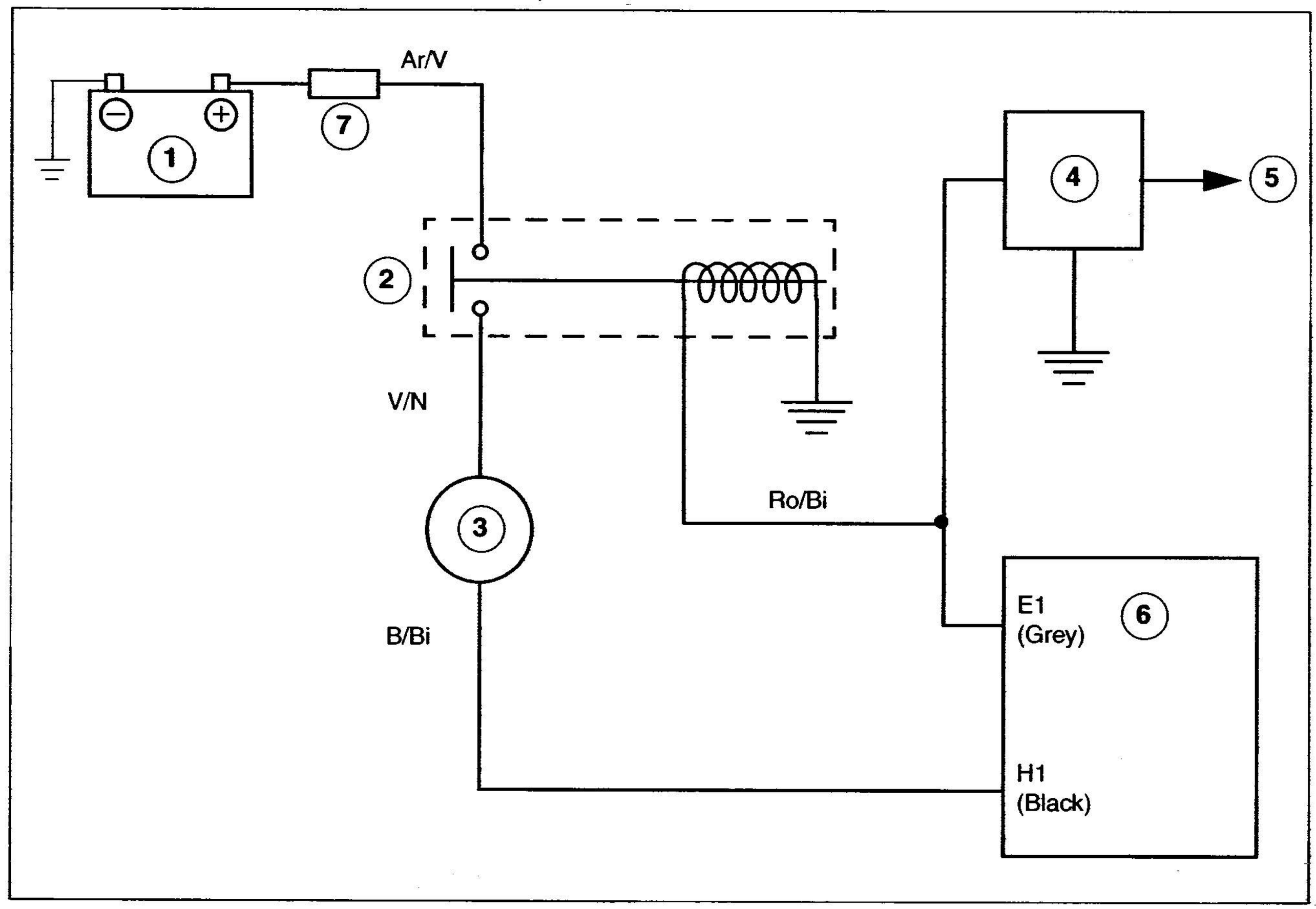

Legend:

1) Battery
2) Fuel pump relay
3) Pump
4) Overturn sensor
5) Engine stop relay
6) Electronic control unit (ECU)
7) Fuse

6.7.2 CHECKING THE FUEL PUMP

To check the pump operation:

- Remove the lower dashboard panel, see 7.1.20 (REMOVING THE FRONT FAIRING).
- Open the cover (3) of the secondary fuse box.
- Make sure that the fuse (1) is intact.
- Raise the fuel tank, see 2.8 (LIFTING THE FUEL TANK).

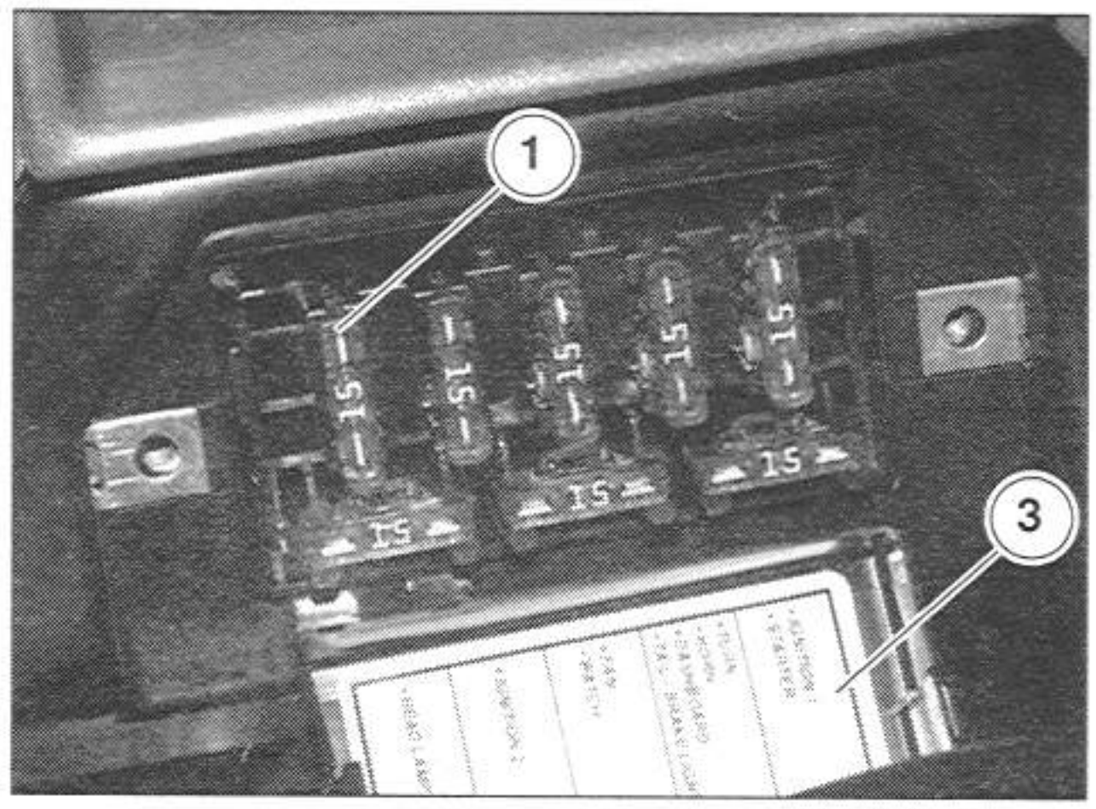

- Disconnect the four-way connector (2) located on the left-hand side of the vehicle.

⚠ WARNING

When reassembling, make sure the connector (2) is fitted properly.

- Connect the positive (+) green (V) and negative (-) blue (B) wires (on the pump assembly side) to a 12-VDC battery.
- Make sure that the pump works properly and emits its usual hum. Check the pressure gauge to make sure the intake pressure is at least 50.76 PSI (350 kPa) (3.5 bar).

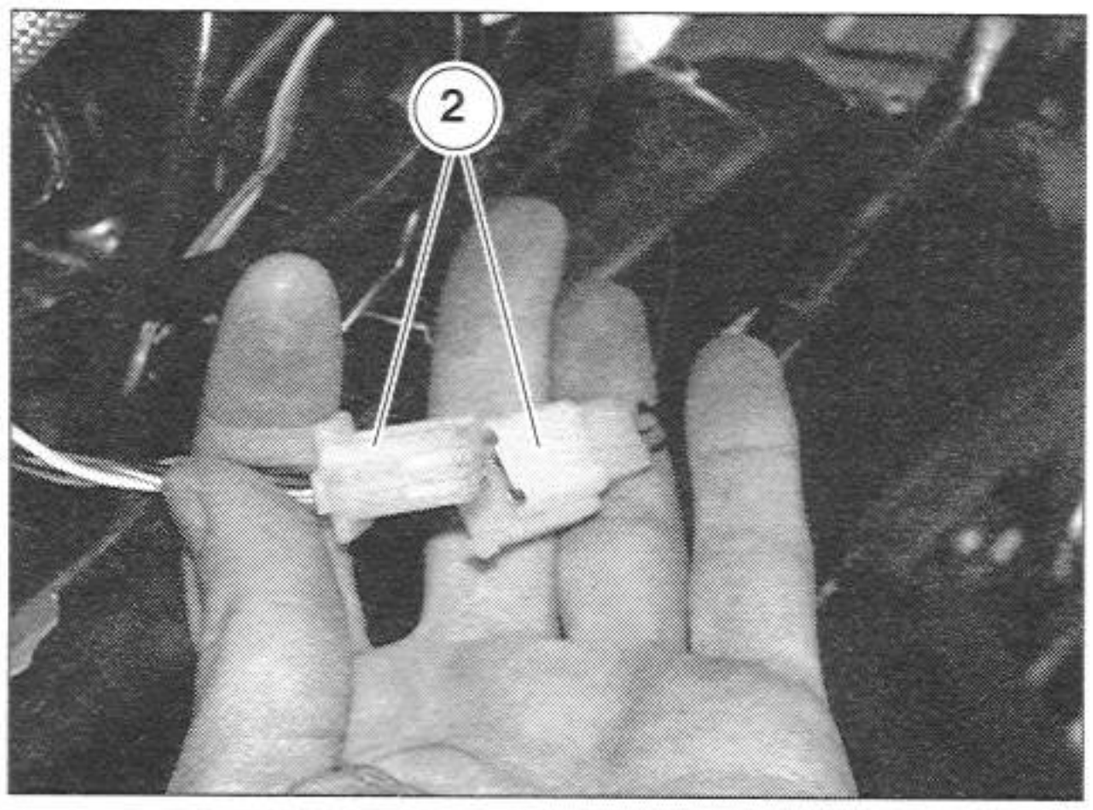

6.7.3 CHECKING THE FUEL PUMP RELAY

To check the relay:

- Disconnect the four-way connector (1) (white) from the relay (2).

⚠ WARNING

When reassembling, make sure the electrical connector (1) is properly connected.

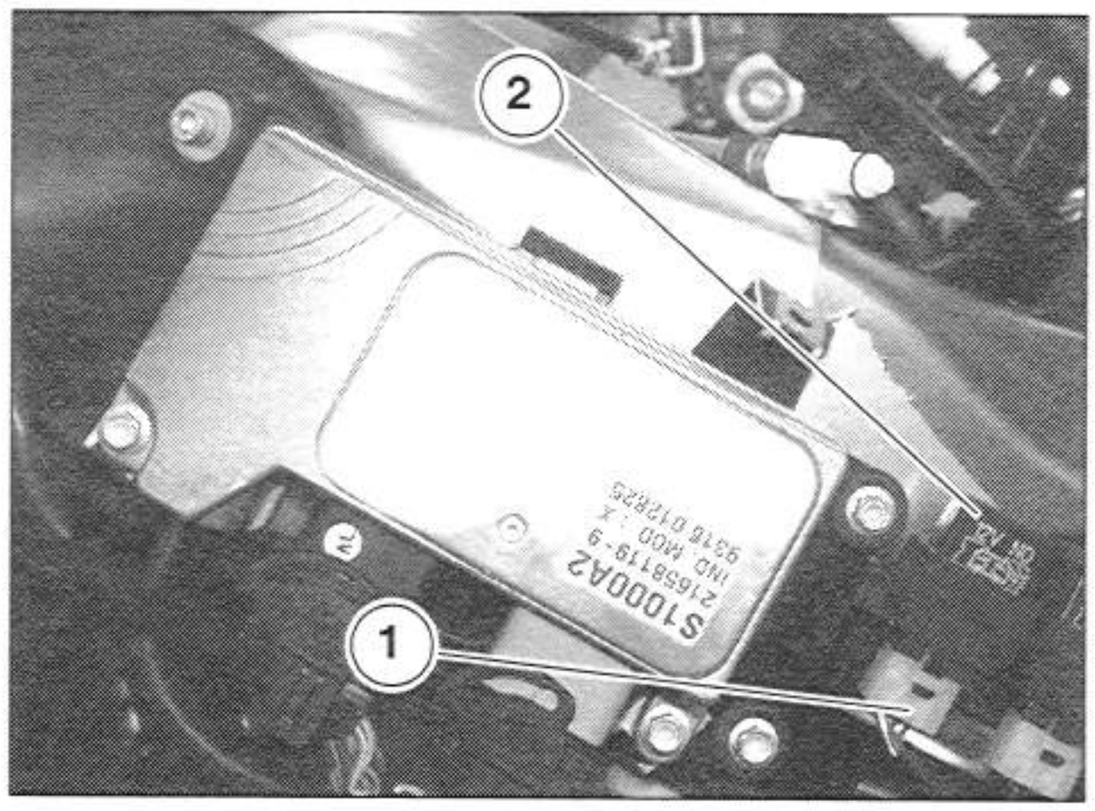

- Connect the two internal male terminals (A-B) to a 12 V battery.
- Use a tester (in ohm meter mode) to check the continuity between the other two terminals (C-D).

Correct value with relay energized: 0 Ω
Correct value with relay not energized: ∞ Ω

If the values do not match those indicated, replace the relay (2).

If all components are working properly, also check:
- overturn sensor, see 6.4.4 (CHECKING THE OVERTURN SENSOR).
- Wiring is correct.

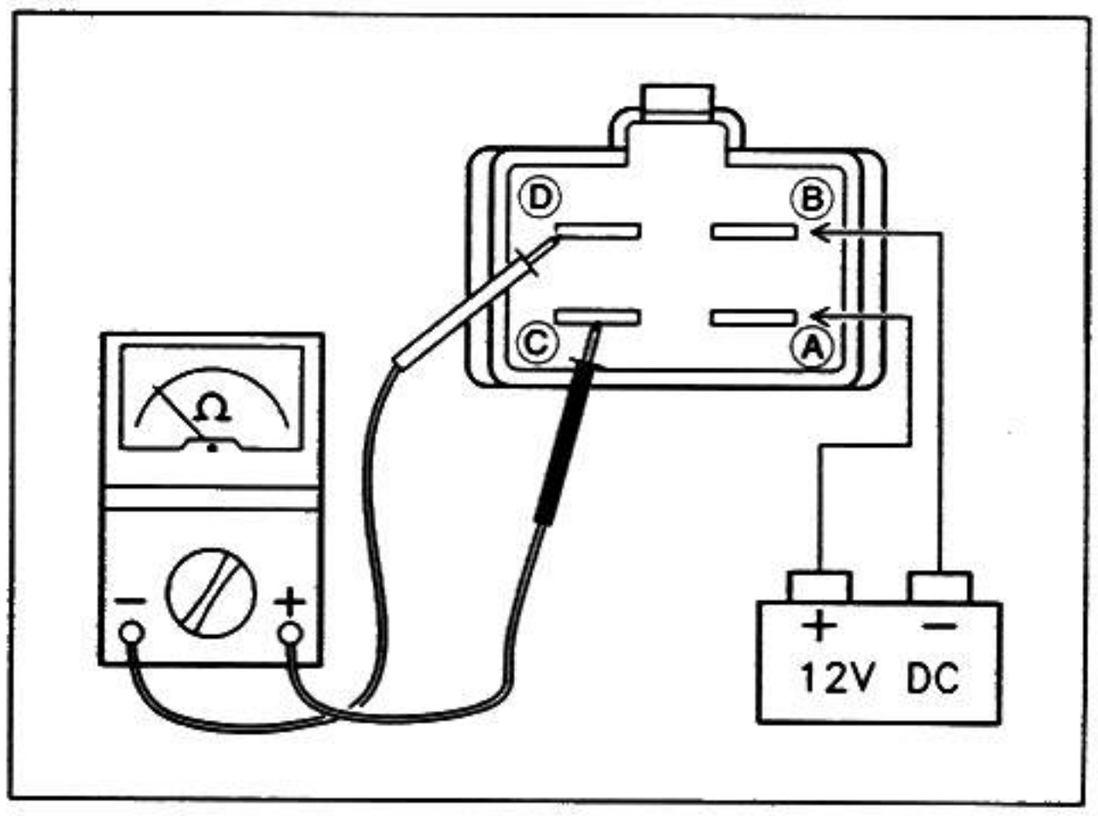

6.8 IGNITION SAFETY SYSTEM

6.8.1 WIRING DIAGRAM

NOTE For the positions of the components, see 6.1 (LOCATIONS OF ELECTRICAL COMPONENTS).

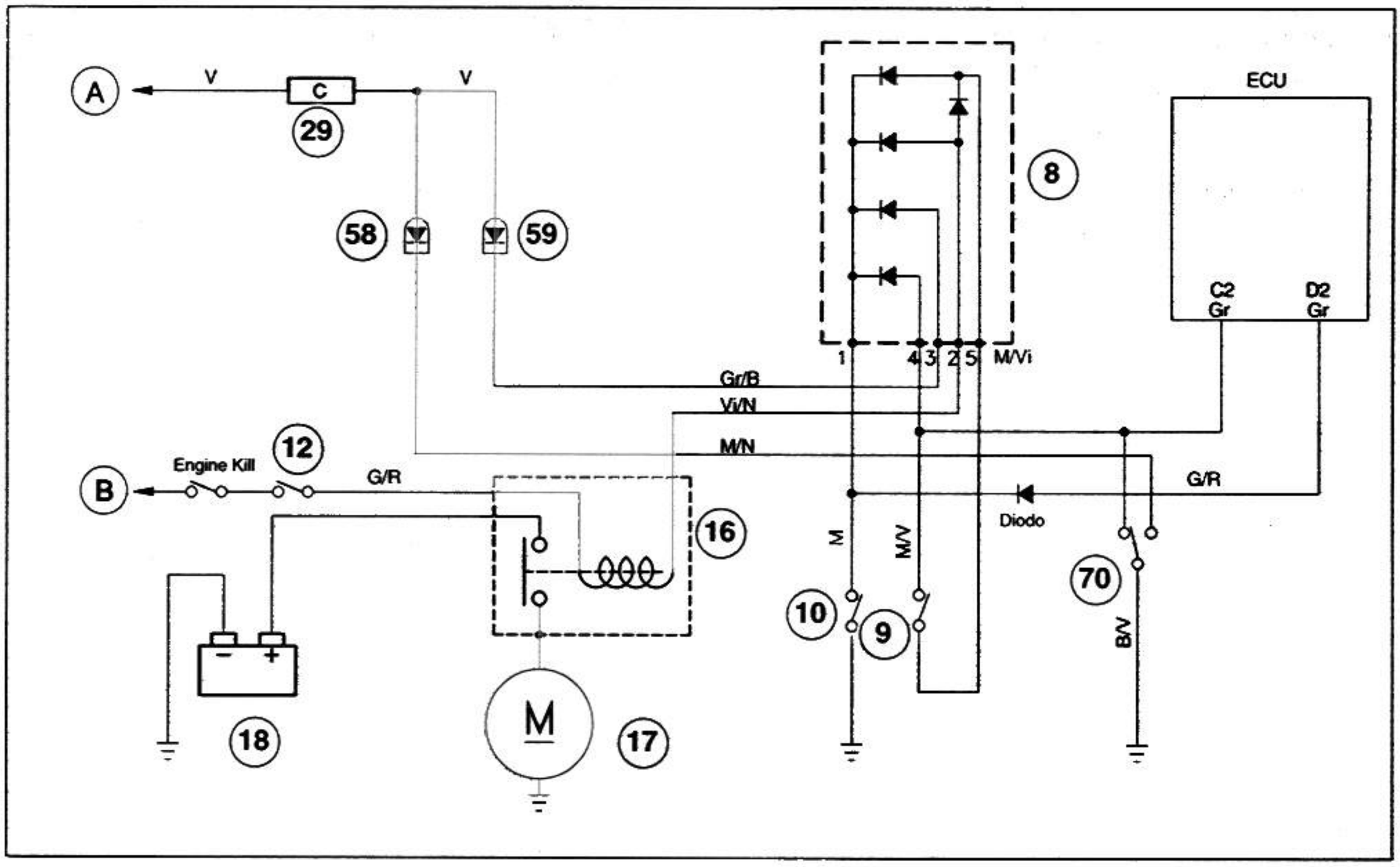

Wiring diagram legend

8) Diode module
9) Switch on clutch lever
10) Neutral gear switch
12) Starter button
16) Start relay
17) Starter motor
18) Battery
29) Secondary fuses (15A)
58) Stand down LED
59) Gear in neutral LED
70) Side stand switch
A) To battery / ignition switch
B) To the secondary fuses (15 A)

6.8.2 STARTING SAFETY OPERATING LOGIC

NOTE With the engine stop switch set to "⊗" the starter motor does not turn over.

GEAR POSITION	STAND POSITION	CLUTCH LEVER	STAND WARNING LIGHT	ENGINE IGNITION	STARTER MOTOR
IN NEUTRAL	RETRACTED	PULLED	OFF	WORKING	TURNS OVER
		RELEASED			
	EXTENDED	PULLED	ON		
		RELEASED			
GEAR ENGAGED	RETRACTED	PULLED	OFF		
		RELEASED			DOES NOT TURN OVER
	EXTENDED	PULLED	ON	DOES NOT WORK	
		RELEASED			

6.8.3 CHECKING THE START RELAY

To check the relay:

- Remove the saddle, see 7.1.1 (REMOVING THE SADDLE).
- Disconnect the two-way connector (1) (white).

⚠ WARNING

When reassembling, make sure the electrical connector (1) is properly connected.

- Lift up the relay and slide it out of its connectors (2).
- Slip off the two rubber boots (3-4).
- Disconnect the cables from the terminals on the relay (2).

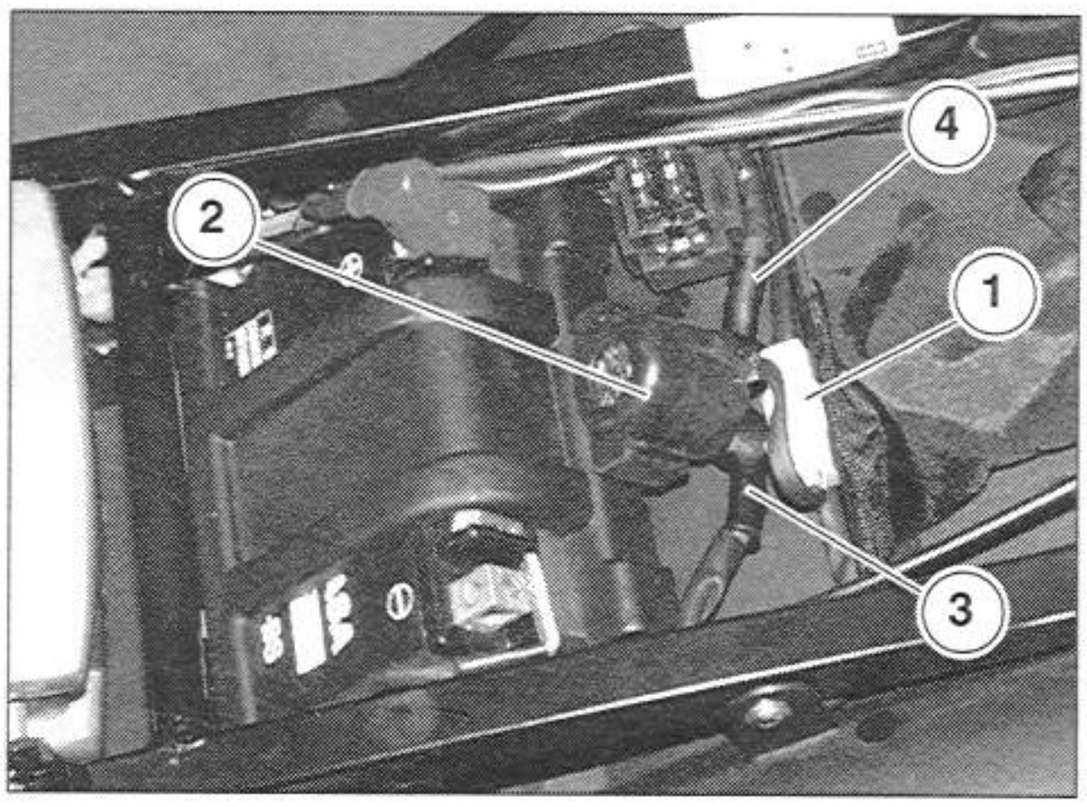

- Apply 12 V to the two internal male prongs of the connector (1) on the relay side.
- Use a tester (in ohm meter mode) to check the relay operation by measuring the resistance between the two contact screws on the relay (2).

Correct value with relay energized: 0 Ω.
Correct value with relay not energized: ∞ Ω.

If the values do not match those indicated, replace the relay (2).

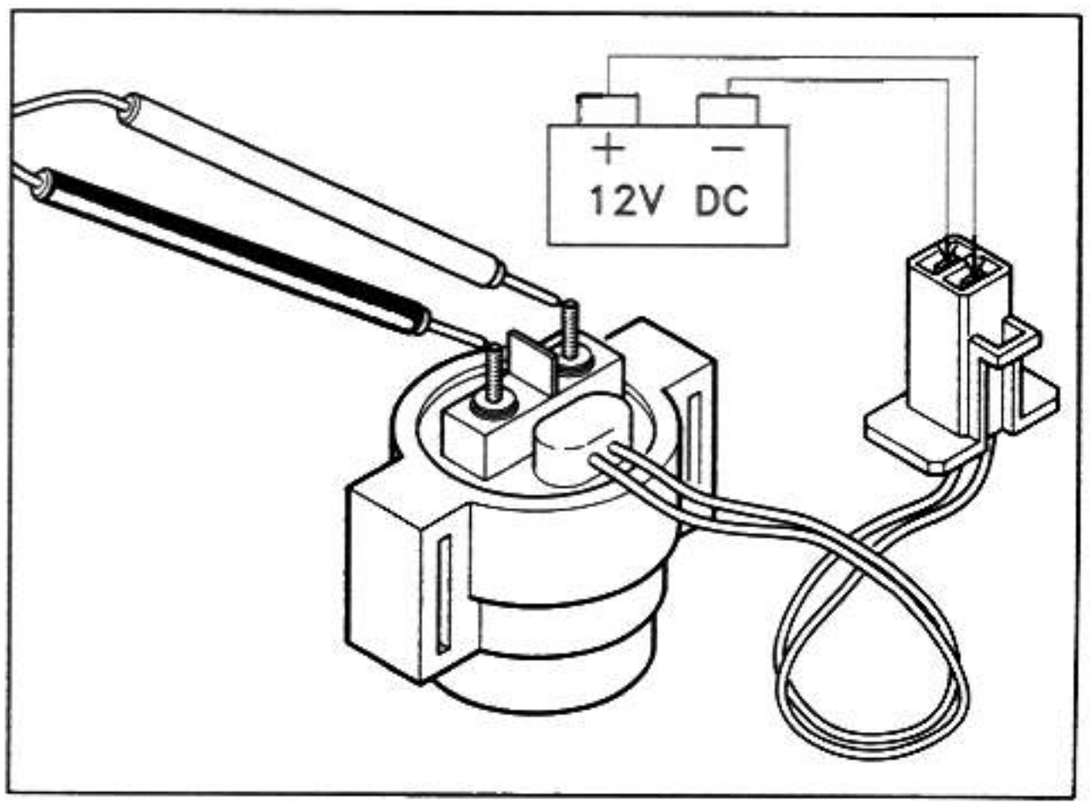

6.8.4 CHECKING THE DIODE

To check the diode:

- Remove the left fairing, see 7.1.28 (REMOVING THE SIDE FAIRINGS).
- Disconnect the two-way connector (1) (white) (under the left fairing near the ECU).

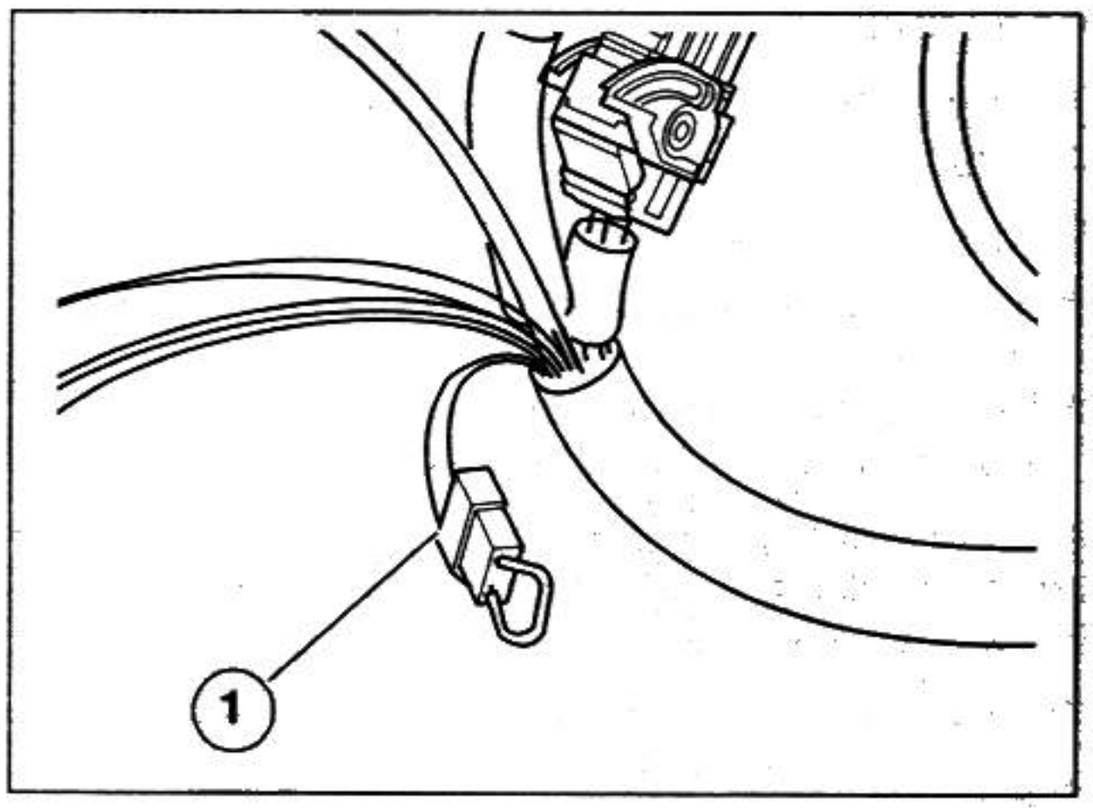

⚠ WARNING

When reassembling, make sure the electrical connector (1) is properly connected.

Use a tester (in diode test mode) to check the values between the two internal male prongs of the diode as shown in the figure.

Correct value (measurement A):0 Ω
Correct value (measurement B): ∞

If the tester does not have a diode test function, connect to a 12 V battery, inserting a 12 V/2 W bulb on the positive cable, connecting the diode as shown in the figure.

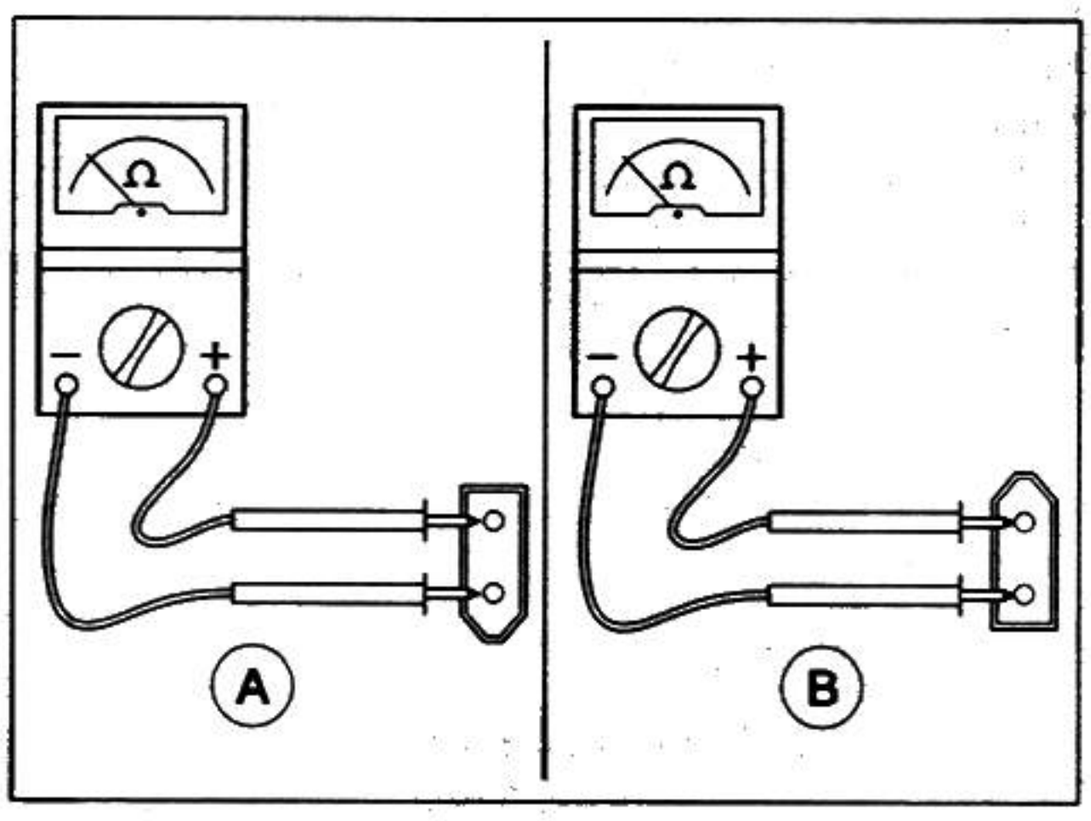

⚠ WARNING

Never use bulbs over 2 W as they could damage the diode.

Test (C): the bulb does not light.
Test (D): the bulb lights.

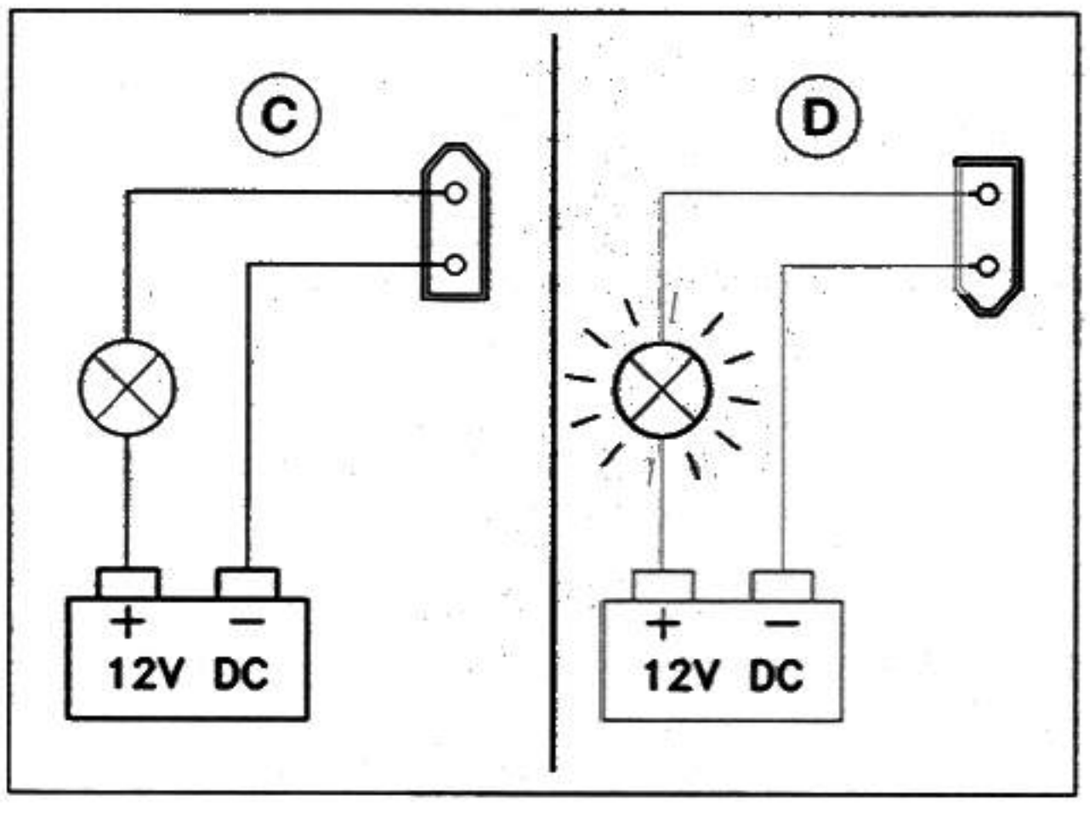

6.8.5 CHECKING THE SIDE STAND SWITCH

The side stand (1) must be able to rotate freely, without binding.

Carry out the following checks:

- The springs (2) must not be damaged, worn, rusted or weakened.
- The side stand must pivot freely. Grease the joint if necessary, see 1.12 (LUBRICANT CHART).

A safety switch (3) is installed on the side stand (1) to prevent or stop the engine from running with the engine in any gear except neutral, with the side stand (1) down.

To check the side stand safety switch (3):

- Sit on the vehicle as though you were riding.
- Retract the side stand (1).
- Start the engine.
- With the throttle grip released and the engine idling, fully squeeze the clutch lever. Engage the first gear by pushing the gearshift lever down.
- Lower the side stand (1), which will activate the safety switch (3).

At this point:
– the engine must stop;
– the side stand down LED "" must light on the dashboard.

If this does not occur, replace the switch (3).

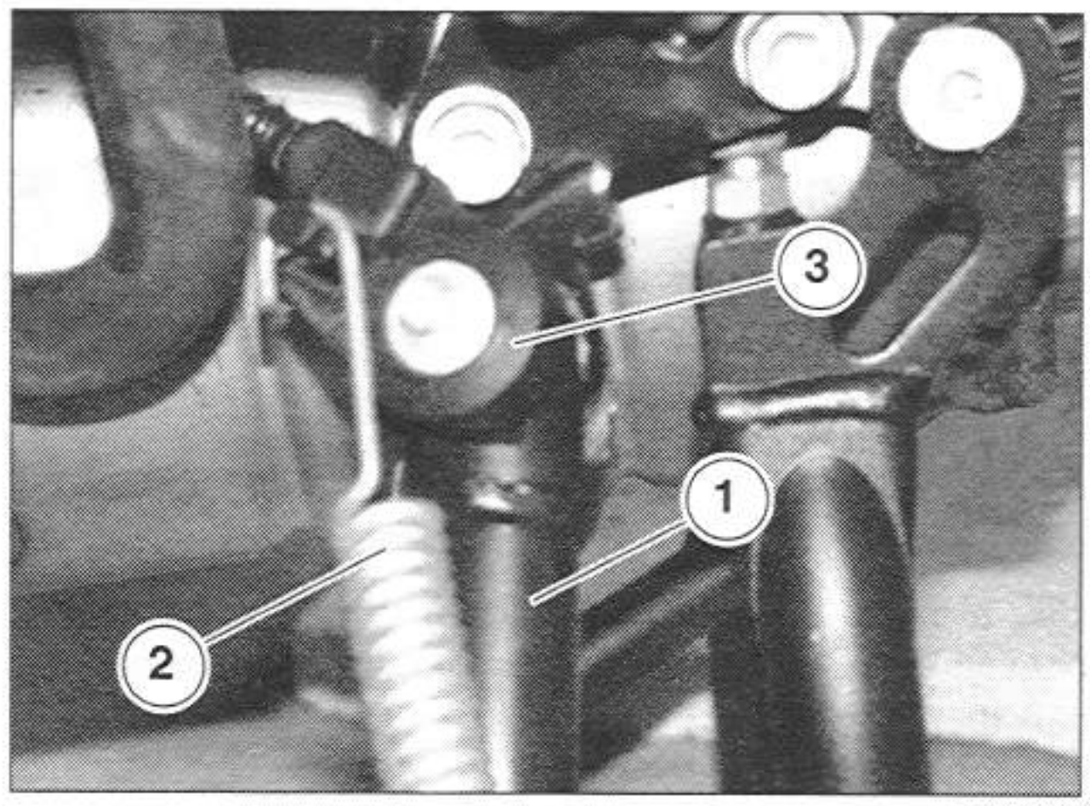

6.8.6 CHECKING THE DIODE MODULE

- Remove the left fairing, see 7.1.28 (REMOVING THE SIDE FAIRINGS).
- Disconnect the five-way connector (1) (white) from the module (2).

⚠ WARNING

When reassembling, make sure the electrical connector (1) is properly connected.

- Connect the various terminals to a 12 V battery, inserting 12 V/2 W bulb on the positive cable (+) as indicated.

⚠ WARNING

Never use bulbs over 2 W to avoid damaging the module.

– \ +	1	2	3	4	5
1		○	○	○	○
2	●		●	●	●
3	●	●		●	●
4	●	●			●
5	●	○	●	●	

⚠ WARNING

The bulb must light only where indicated.
If not, replace the module (2).

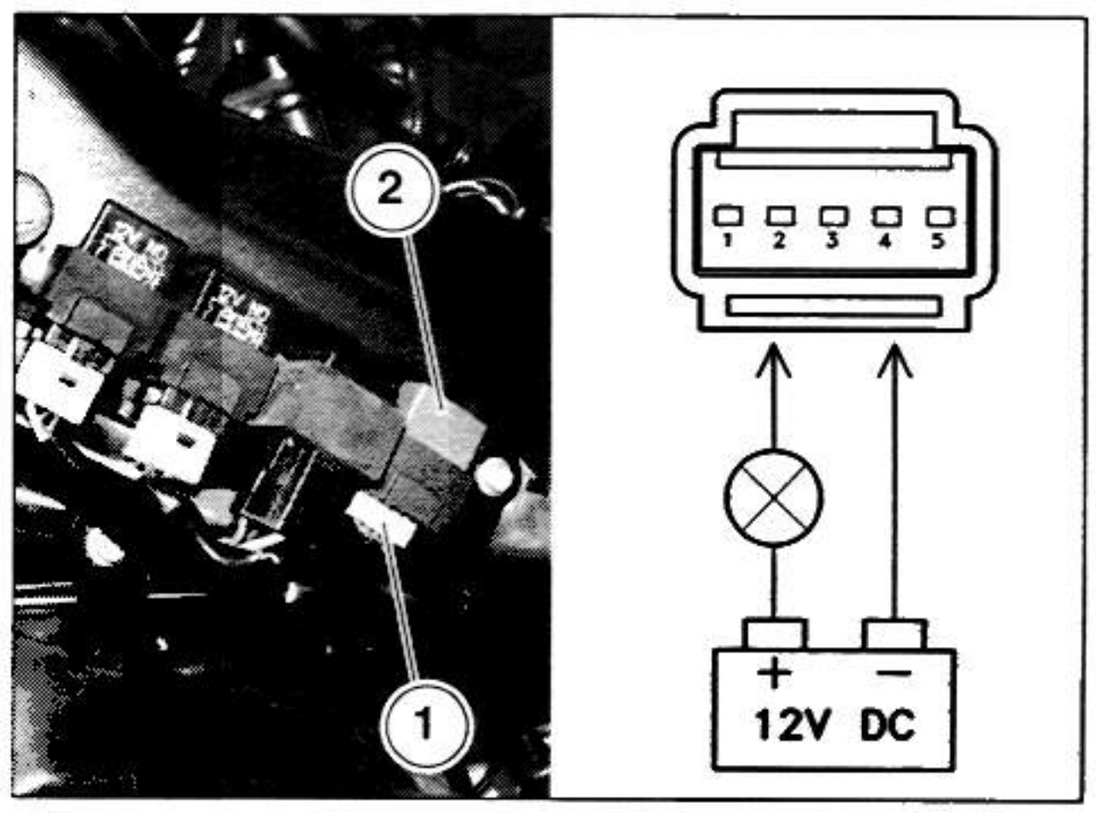

6.8.7 CHECKING THE SAFETY SYSTEM SWITCHES

Use a tester to check the continuity of the switches, referring to the specific diagram.
Should you detect anything out of order, replace the corresponding group of switches.

1) NEUTRAL GEAR SWITCH

Pos.	Cables	
	Screw	⏚
Neutral	○	○

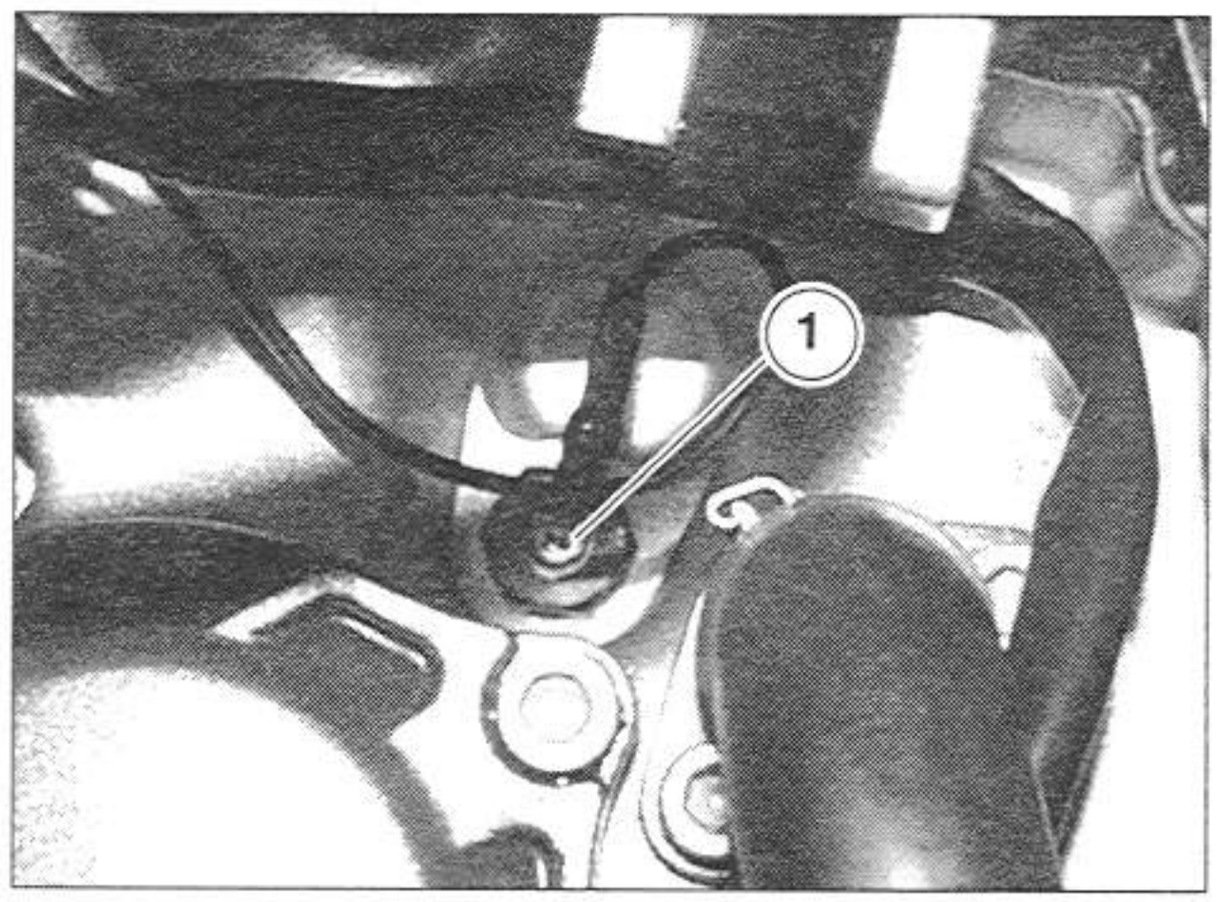

2) SIDE STAND SWITCH

Side stand pos.	Cables		
	M	V	N
Lowered	○		○
Raised		○	○

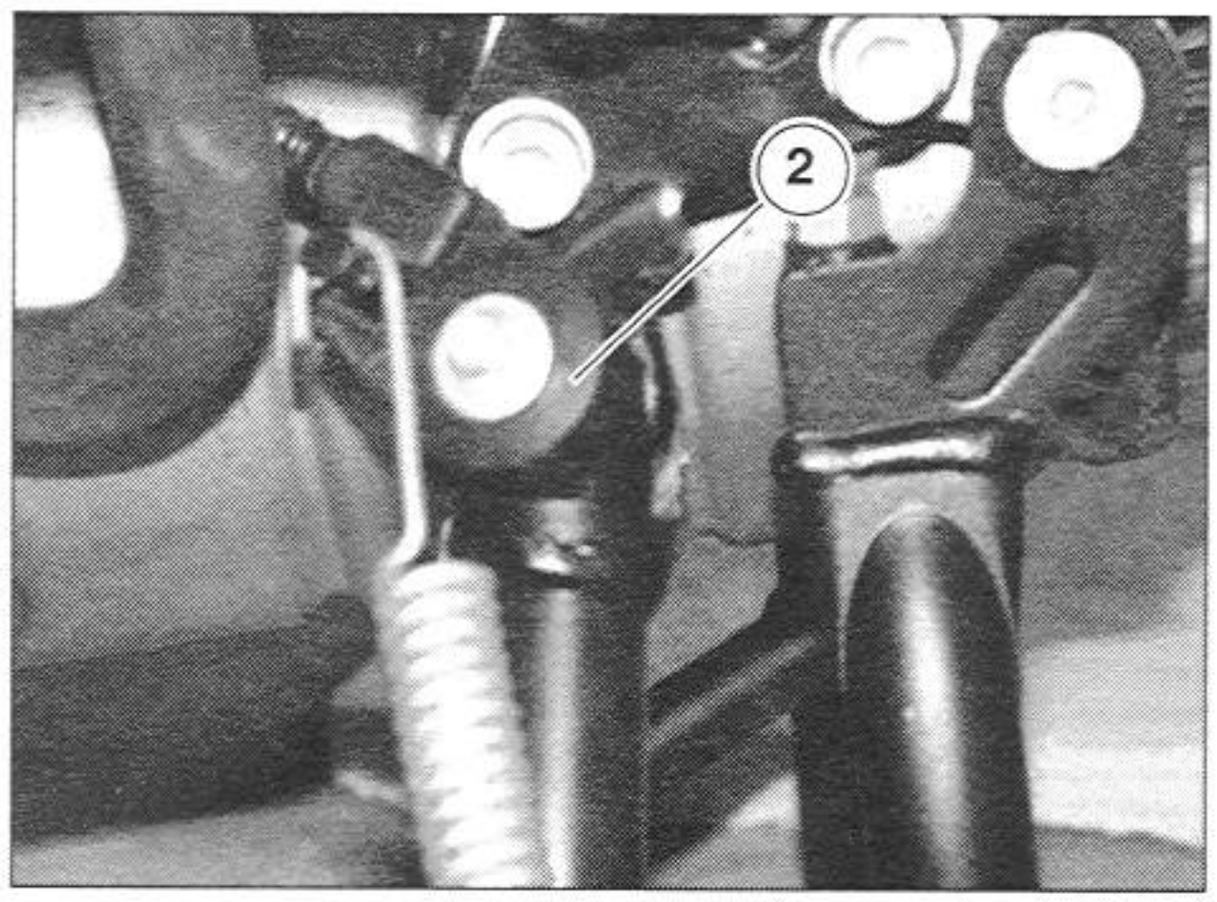

3) CLUTCH LEVER SWITCH

Pos.	Cables	
	Gr	M
Activated	○	○

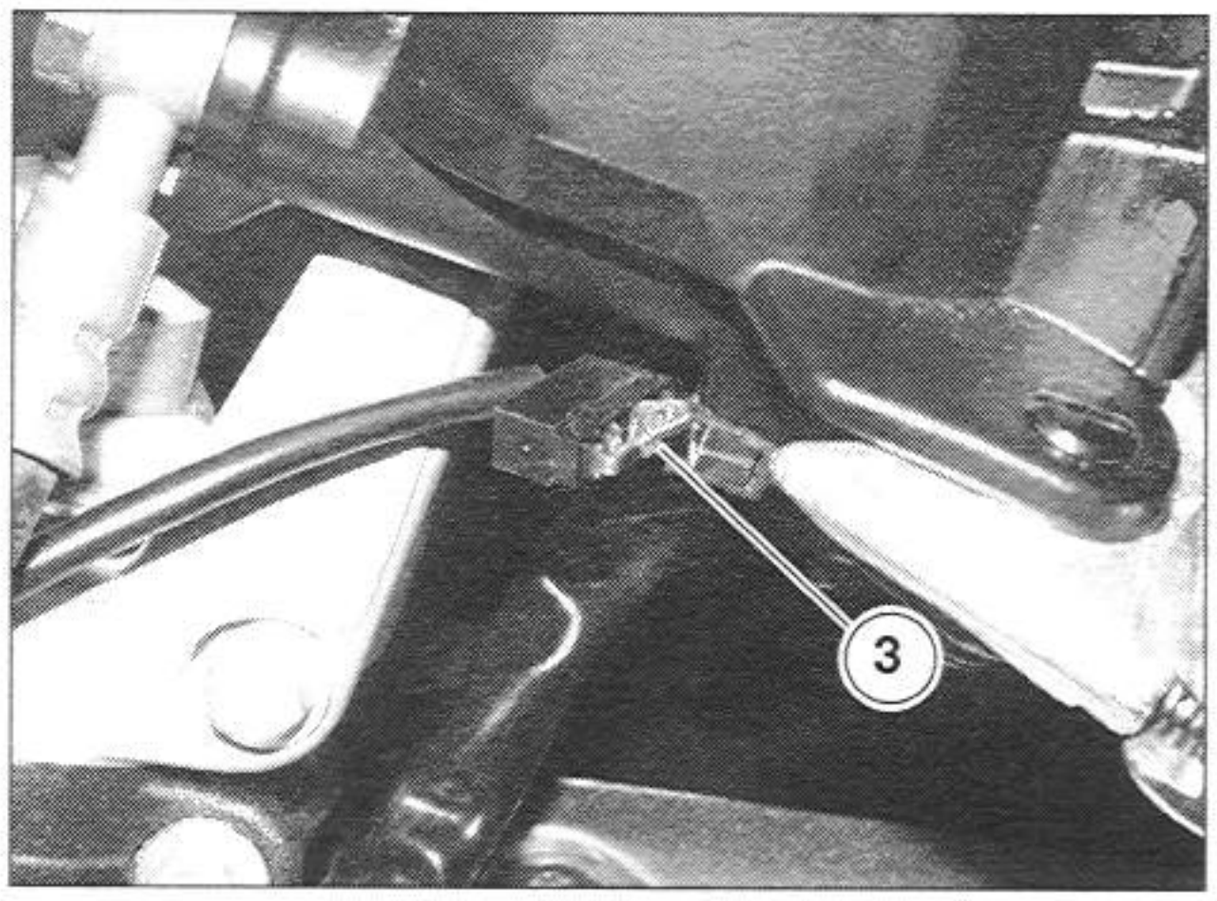

6.9 ELECTRIC COOLING FANS

6.9.1 WIRING DIAGRAM

NOTE For the locations of the components, see 6.1 (LOCATIONS OF ELECTRICAL COMPONENTS).

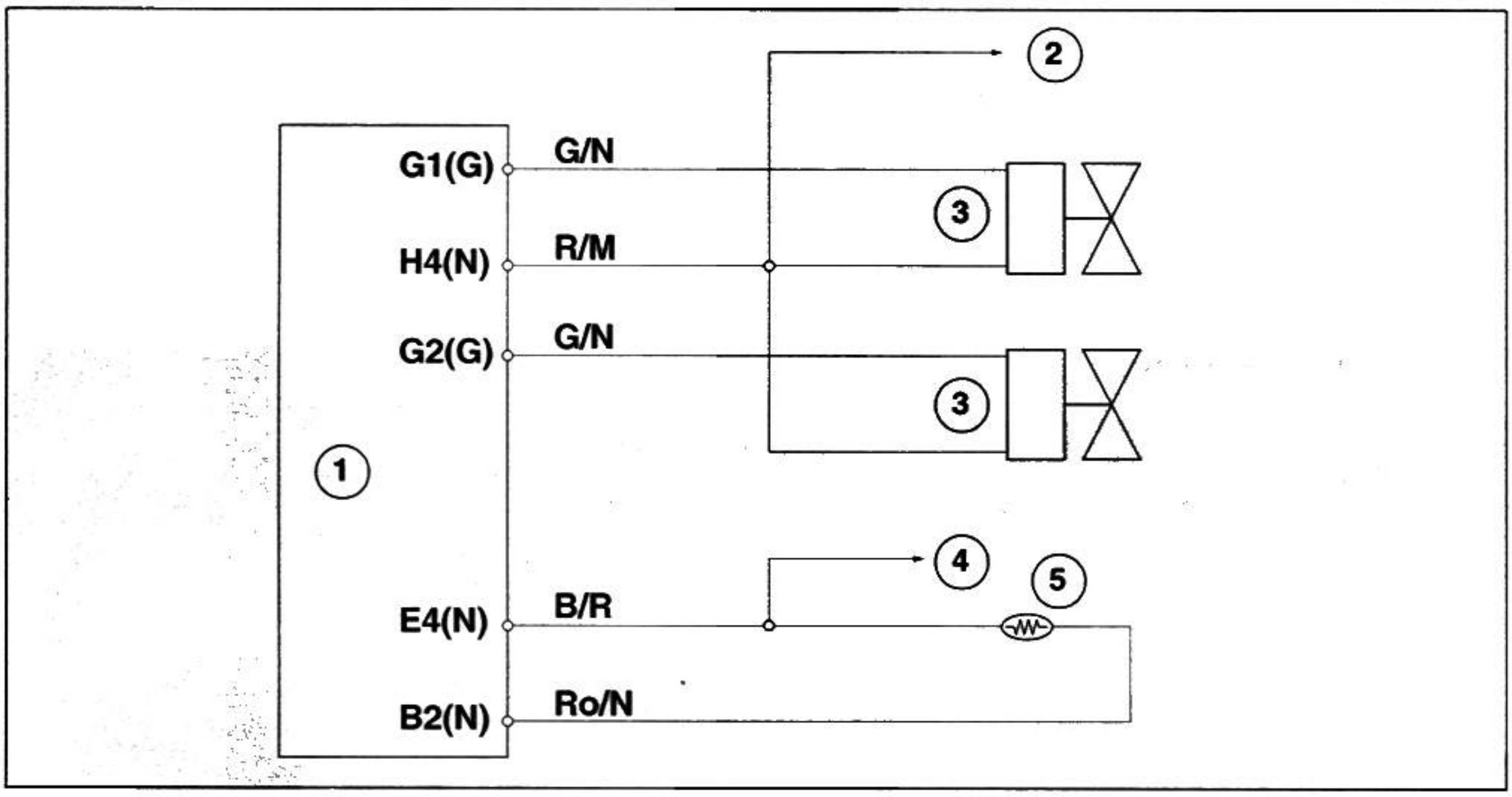

Wiring diagram legend

1) ECU
2) Injection relay
3) Fans
4) Throttle sensor
5) Coolant thermistor

6.9.2 CHECKING THE ELECTRIC FAN OPERATION

NOTE The following steps refer to a single fan, but are applicable to both.

- Carry out the first three steps described in paragraph 5.3 (REMOVING THE ELECTRIC COOLING FANS).

NOTE Have a 12 V battery ready.

- Connect the connector (black) (1) to the battery
- Make sure that the fan turns freely.

If the fans are working properly, check:
- coolant thermistor, see 6.6.5 (CHECKING THE COOLANT THERMISTORS OPERATION);
- injection system power supply;
- that they are correctly wired to the control unit.

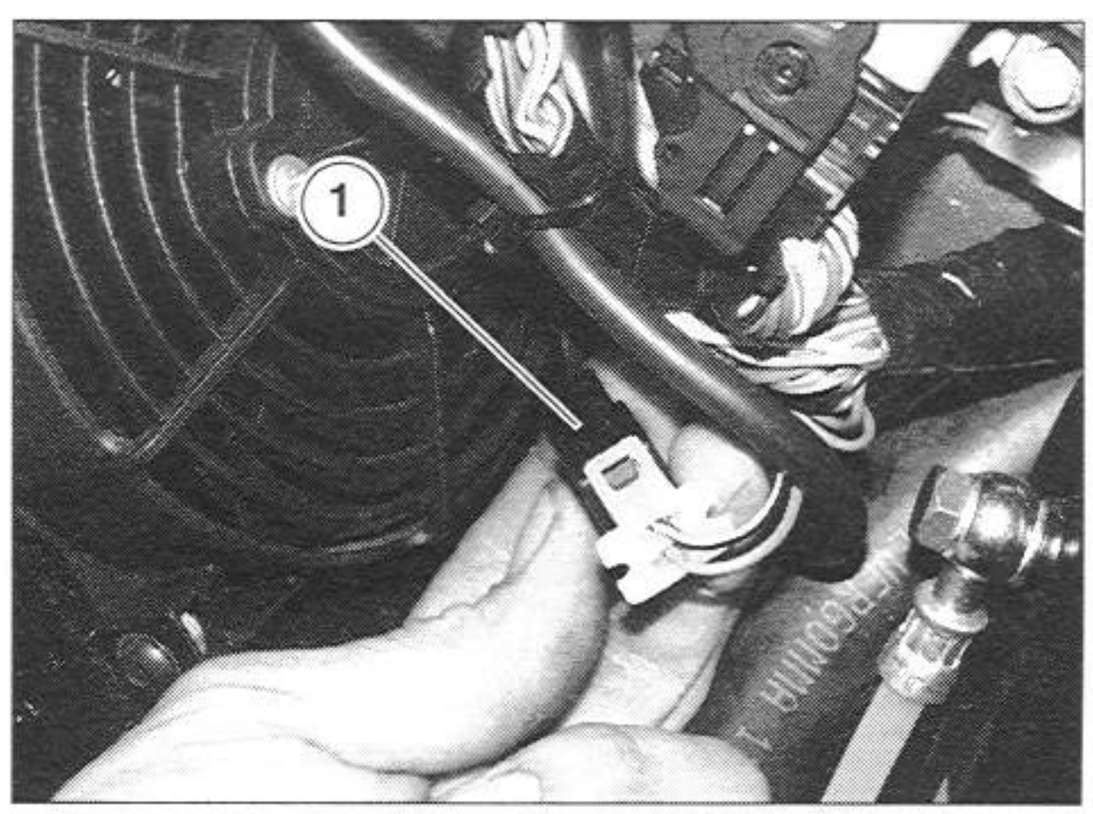

6.10 DASHBOARD INDICATORS

6.10.1 WIRING DIAGRAM

NOTE For the locations of the components, see 6.1 (LOCATIONS OF ELECTRICAL COMPONENTS).

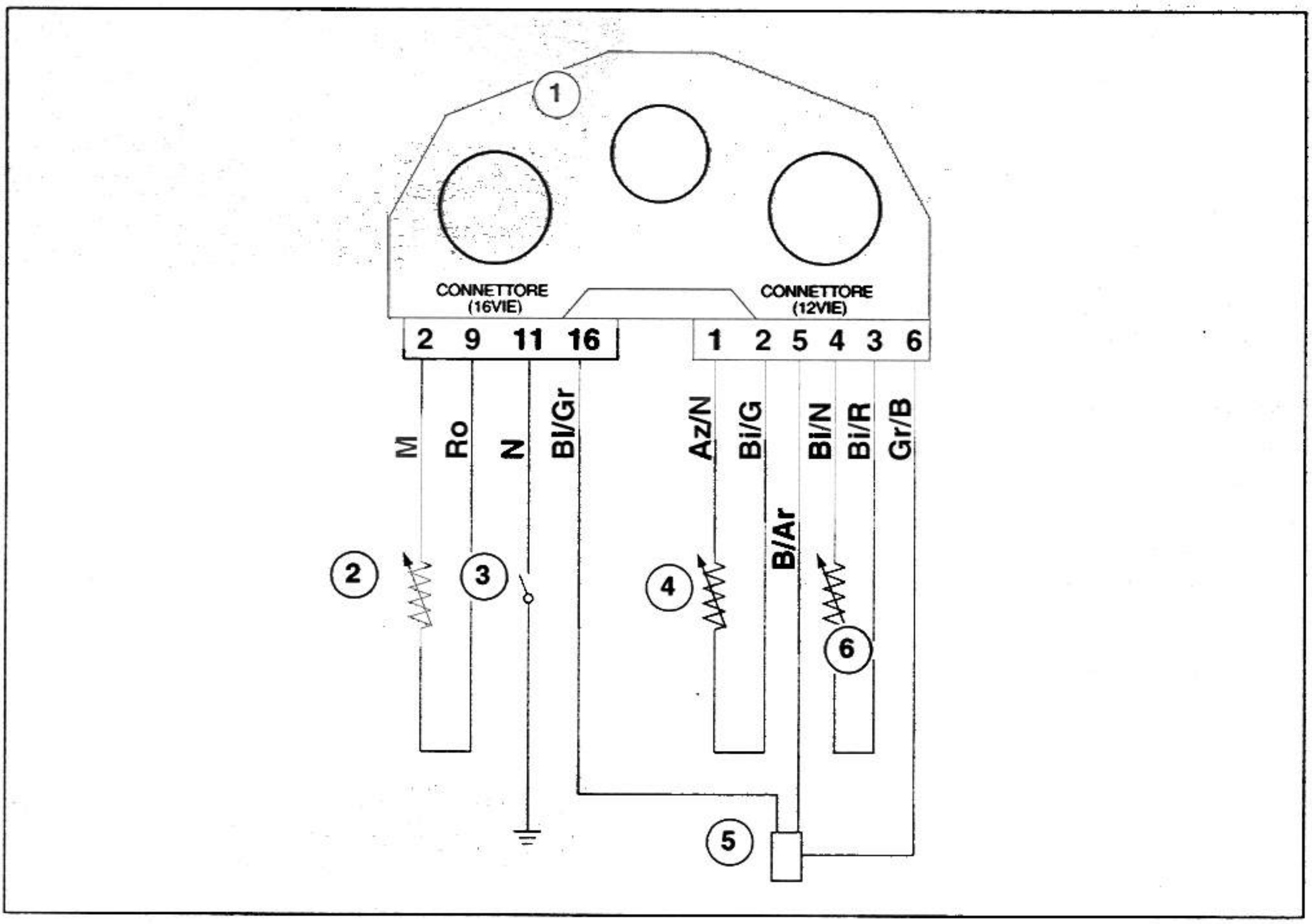

Legend:

1) Dashboard
2) External temperature sensor
3) Oil pressure sensor
4) Fuel level sensor
5) Speed sensor
6) Coolant temperature sensor

6.10.2 AIR TEMPERATURE SENSOR

To check the air temperature sensor:

- Remove the left dashboard panel, see 7.1.20 (REMOVING THE FRONT FAIRING).
- Disconnect the two-way connector (1).
- Check the sensor in a controlled environment with a temperature of 20°C (68°F).

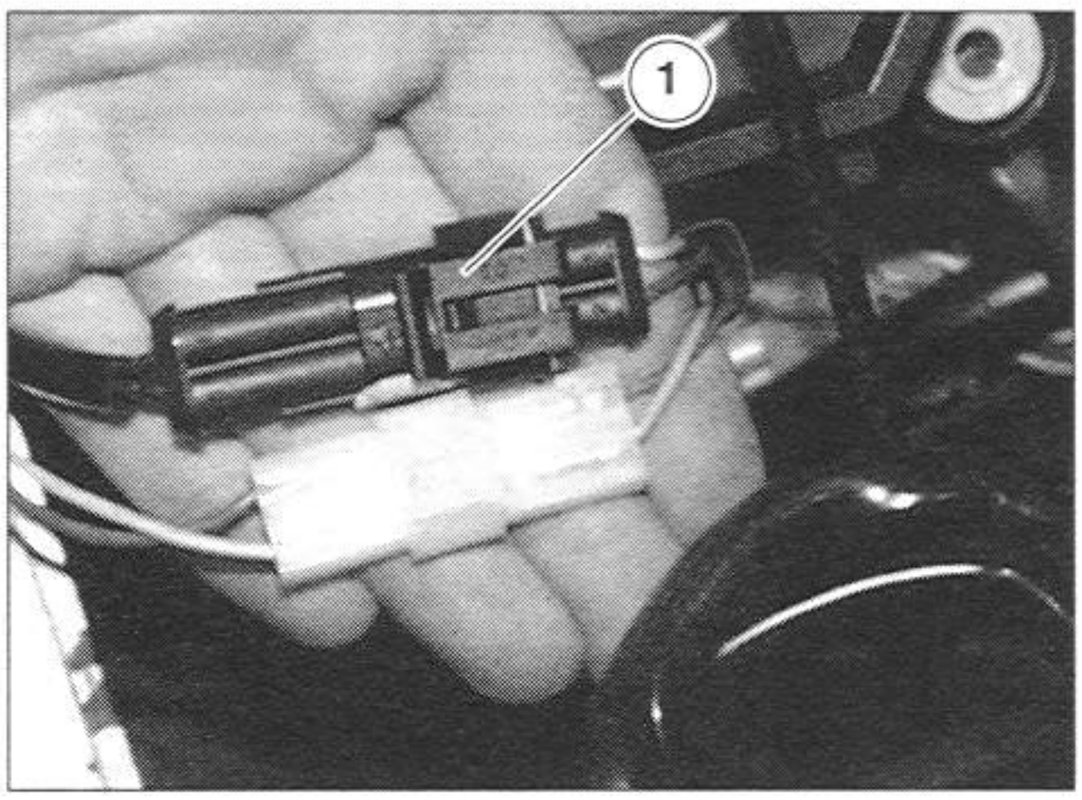

- Measure the electrical resistance using an ohm meter (scale 0-2kΩ) between the terminals of the connector (1).

Correct value: 12.200 kΩ ± 12.700 kΩ

If the air temperature sensor is working properly, check the dashboard:

- Disconnect the 16-way connector (2), see 7.1.24 (REMOVING THE DASHBOARD).
- Apply a resistance of 12.4 k Ω between terminals 2 and 9.
- If the dashboard is working properly, it should indicate a temperature of 20 ± 1°C (68 ± 3°F).

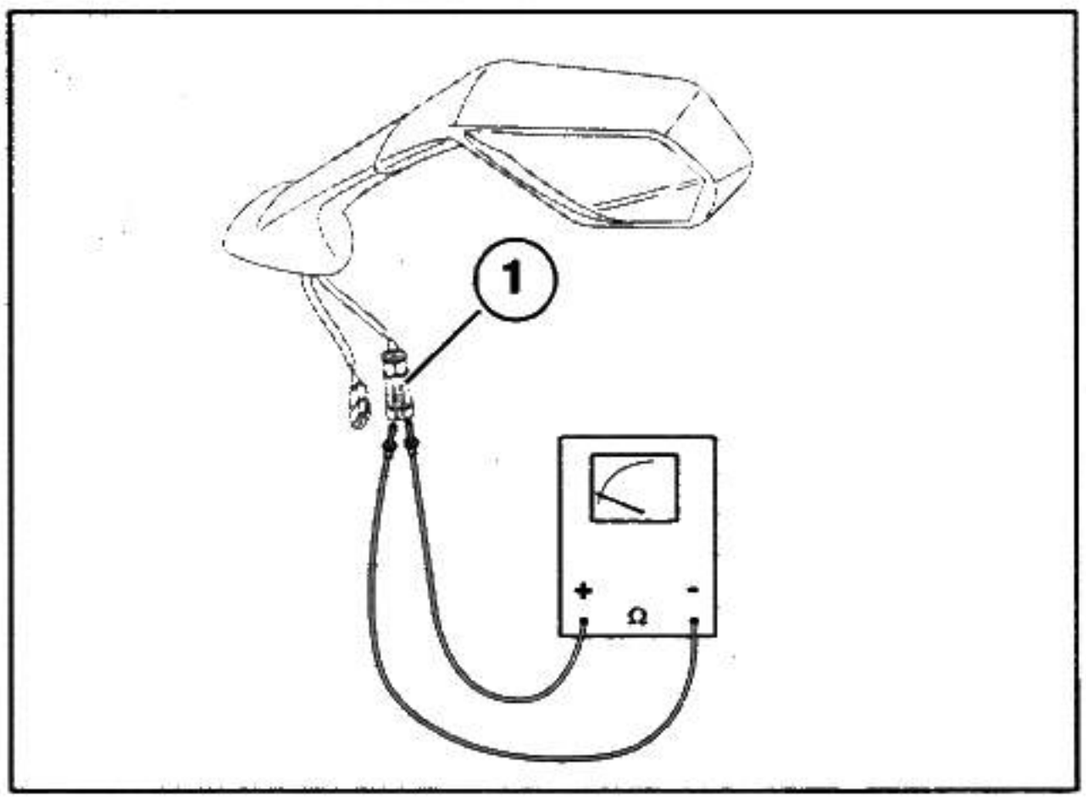

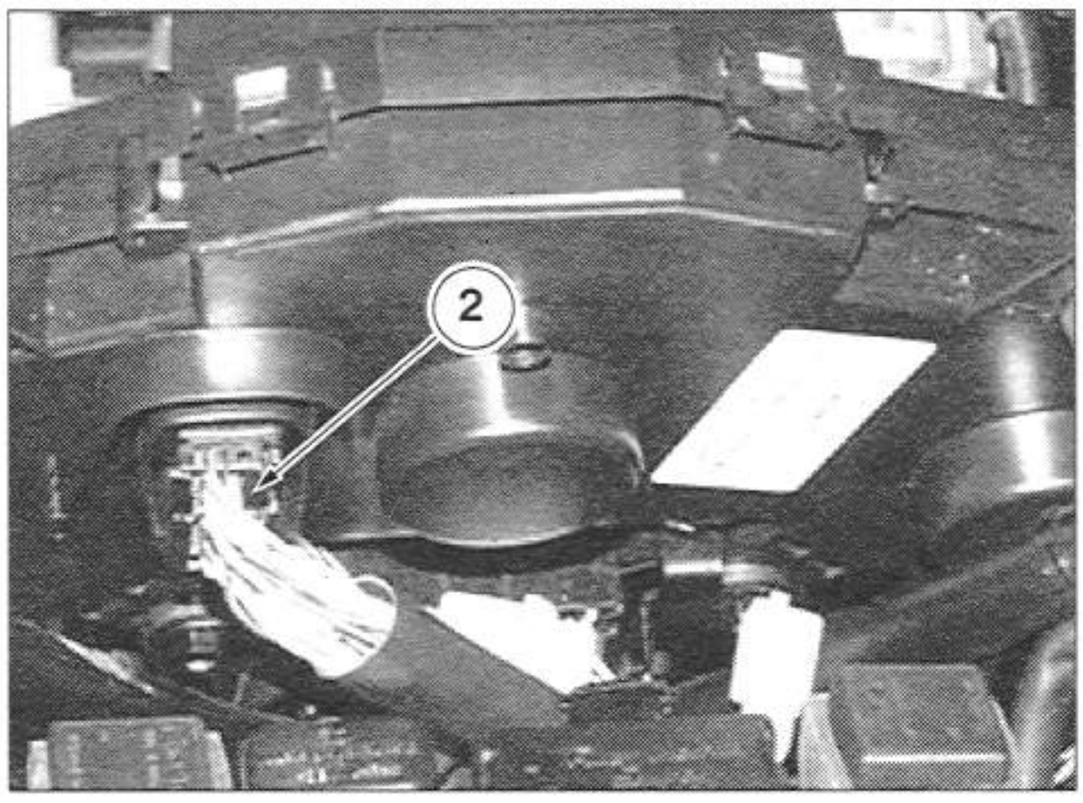

6.10.3 ENGINE OIL PRESSURE SENSOR

- Remove the lower fairing, see 7.1.33 (REMOVING THE LOWER FAIRING).
- Disconnect the electrical terminal (1) from the sensor (2) and ground it.

⚠ WARNING

When reassembling, make sure the electrical terminal (1) is fitted properly.

- With the ignition switch set to "◯", the red engine oil pressure LED "🛢" should light.
- If the LED "🛢" does not light as described, check the sensor.
- Use a tester (scale x 100 Ω) to check the continuity between the terminal tab (3) and the sensor (2) housing (see figure).

Correct value with engine off: 0 Ω
Correct value with engine running: ∞ Ω

If the resulting values do not match those listed, make sure the engine oil level is correct, see 2.12 (CHECKING AND TOPPING UP THE ENGINE OIL LEVEL) and replace the sensor (2) if necessary.

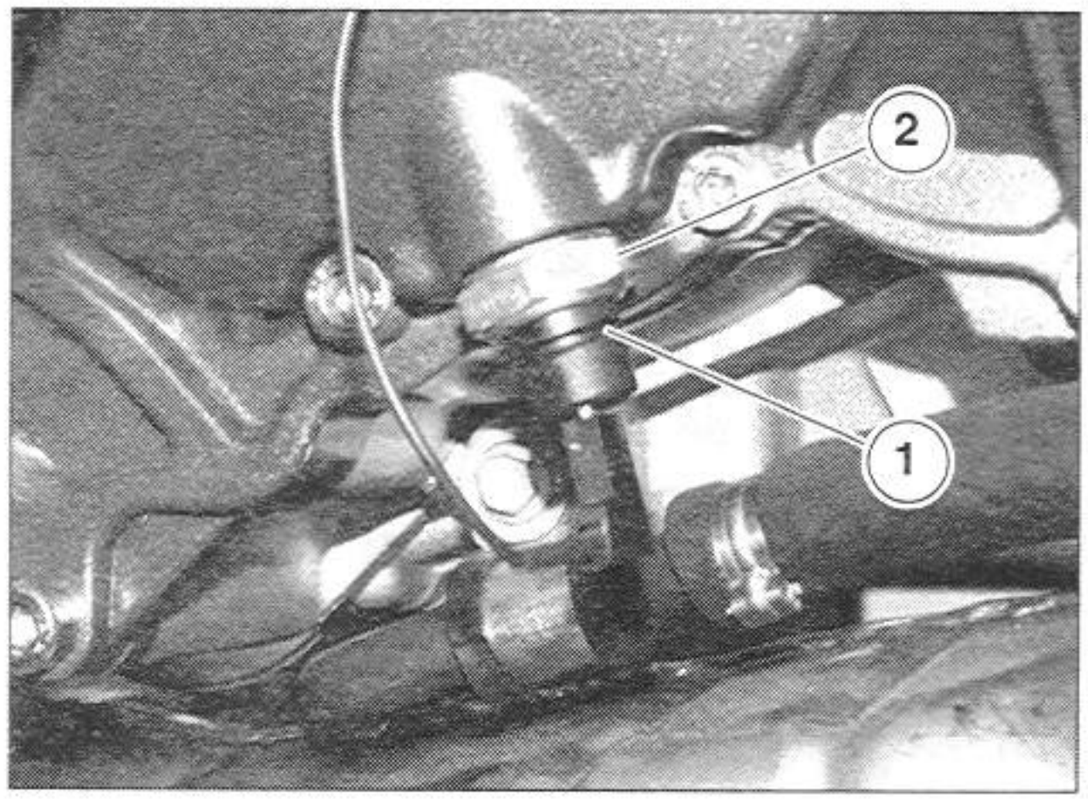

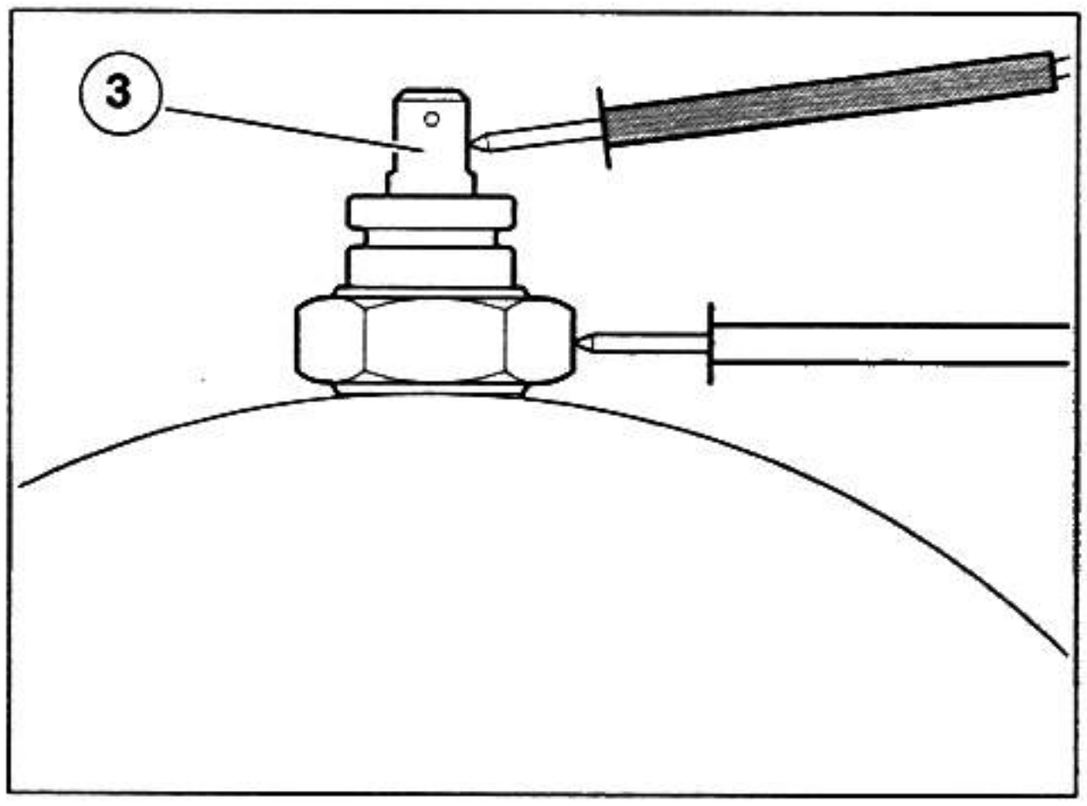

6.10.4 SPEED SENSOR

If the speedometer does not work, proceed as follows:

- Raise the fuel tank, see 2.8 (LIFTING THE FUEL TANK).
- Disconnect the two-way connector of the speed sensor (1) located on the right side of the motorcycle.
- Measure the electrical resistance between the two terminals of the connector (1) on the sensor side:

Correct value 3.83 M Ω ± 5%

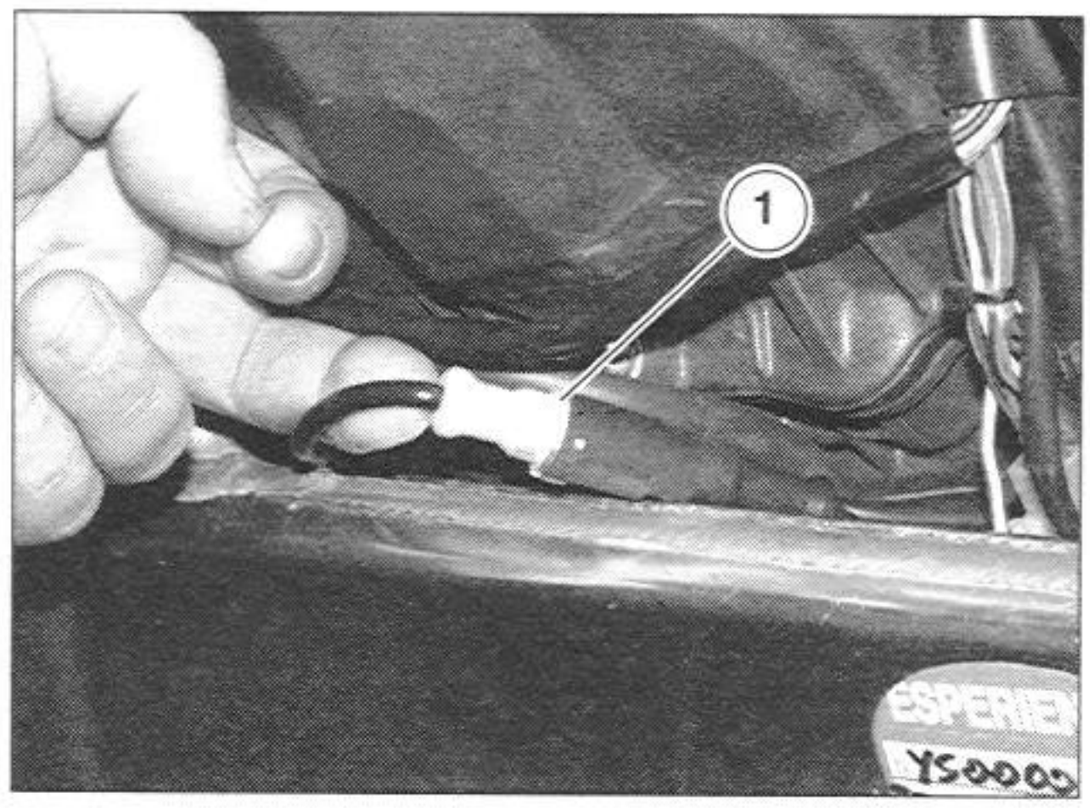

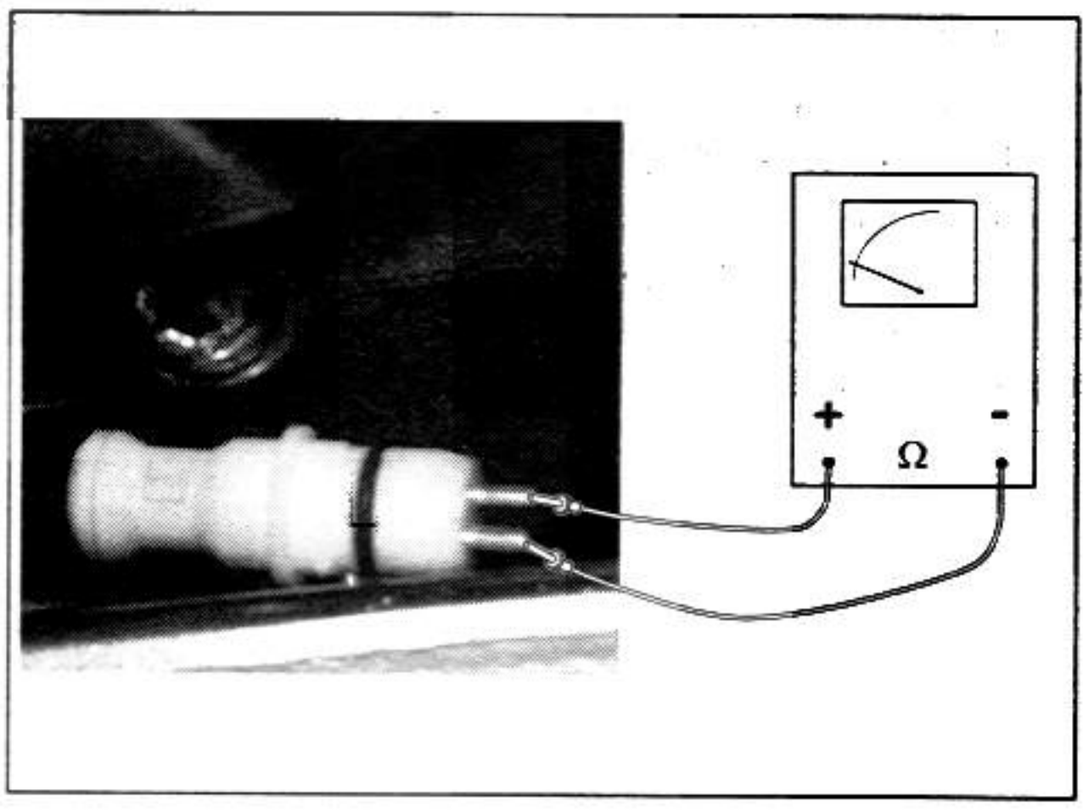

REVERSING THE POLARITY

Correct value: ∞

NOTE Replace the speed sensor if the values are incorrect.

If the values are correct:
- Replace the dashboard, see 7.1.24 (REMOVING THE DASHBOARD).
- Make sure the dashboard wires are properly connected.

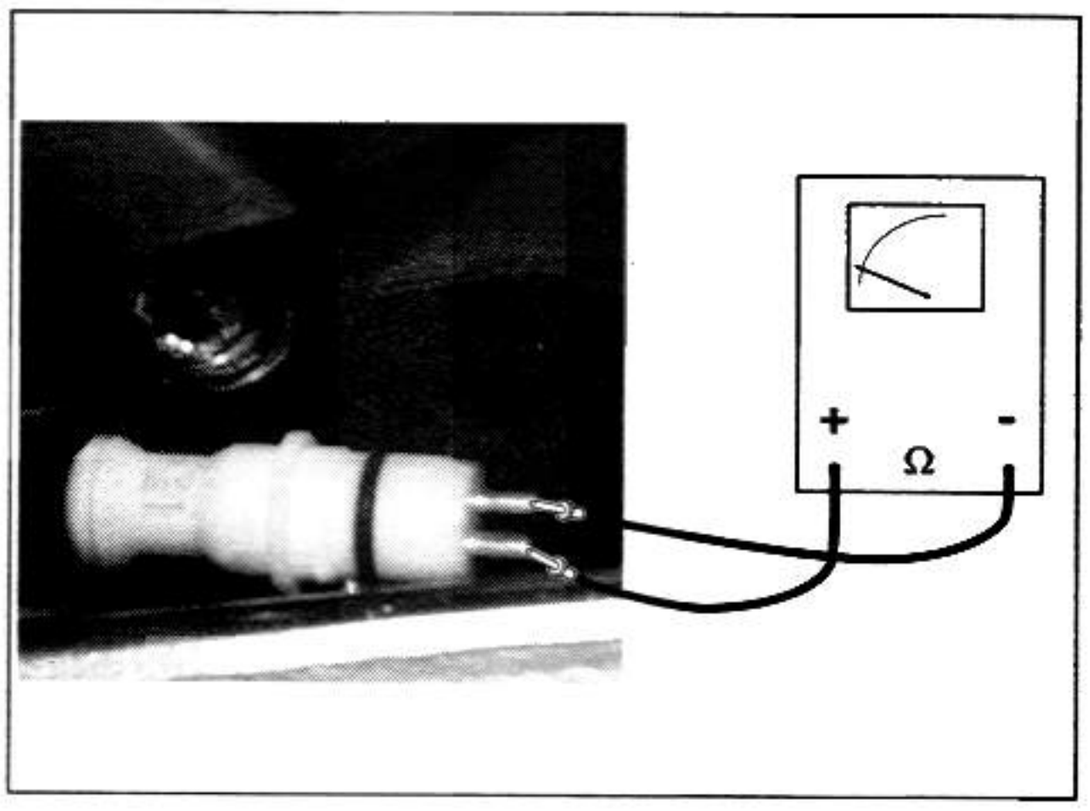

6.10.5 FUEL LEVEL SENSOR

Check the sensor:

- raise the fuel tank, see 2.8 (LIFTING THE FUEL TANK).
- Disconnect the white four-way connector (1) located under the fuel tank (left side).
- Measure the electrical resistance between the orange and black wires on the sensor side:

Correct value with the fuel tank full: less than 14 Ω.
Correct value without fuel: between 240 and 400 Ω.

NOTE Replace the fuel level sensor if the values are incorrect.

If the values are correct, test the dashboard operation by connecting a resistance between the orange-black and white-yellow wires of the 4-way connector (1) on the main system side.

- With resistance = 10 Ω:
  the dashboard shows 9 wedges and liters "F".

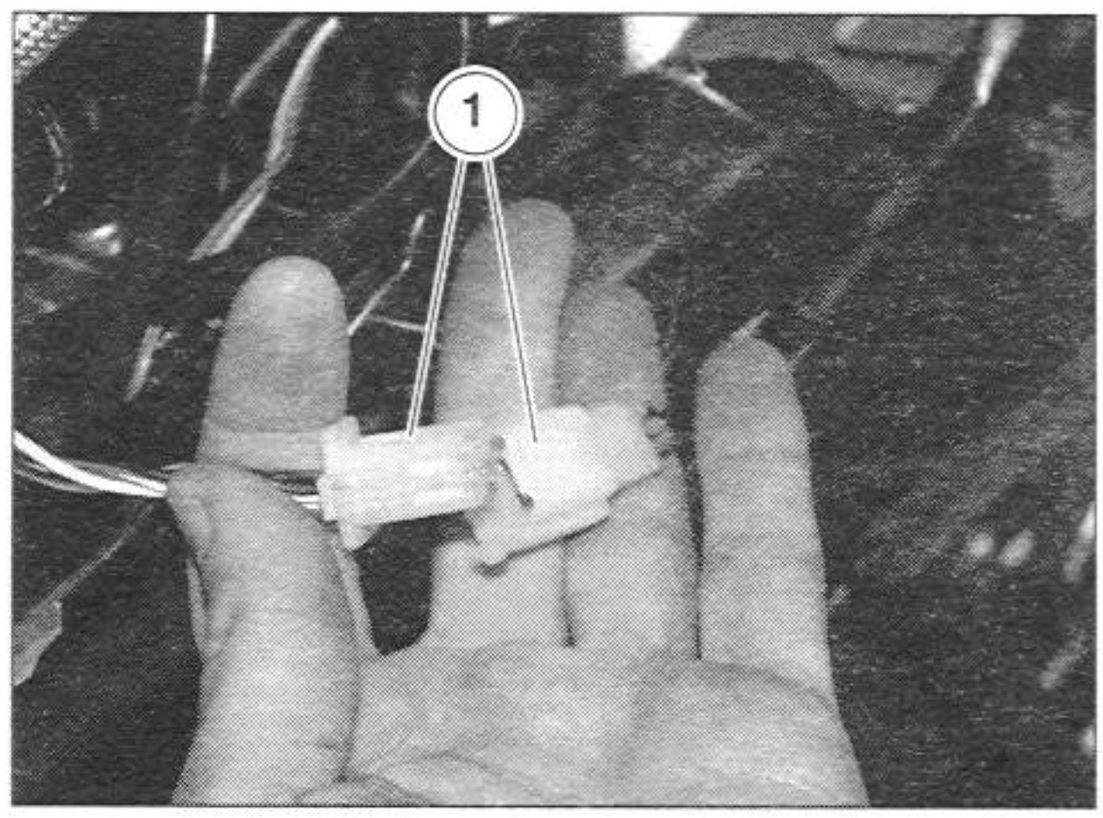

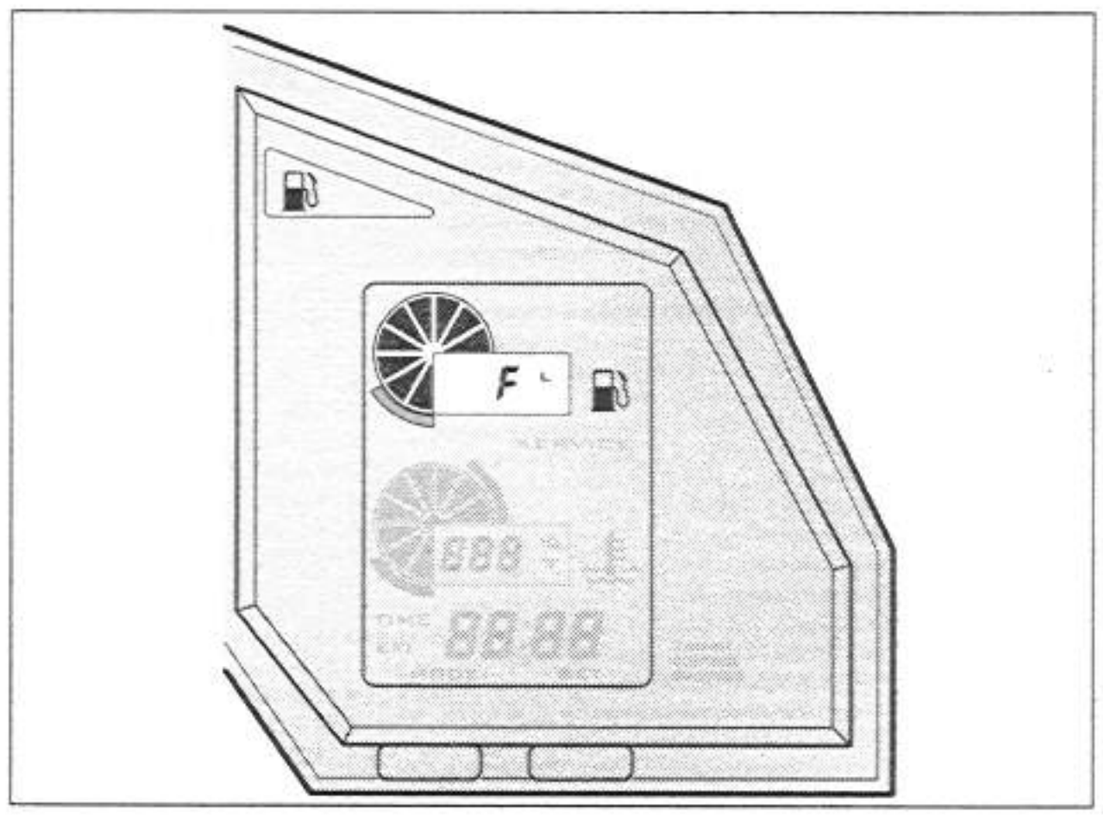

- With resistance = 250 Ω:
  the dashboard shows 0 wedges, liters flash "--". and the reserve LED is lit.

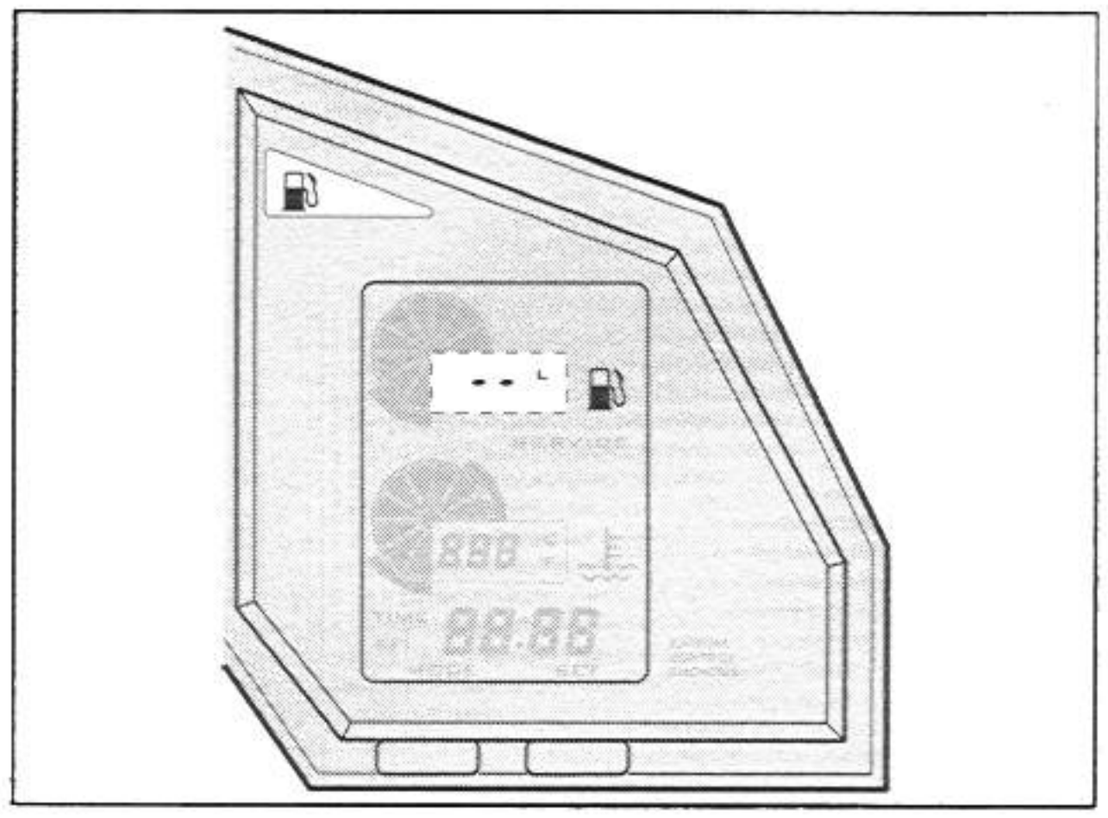

6.10.6 COOLANT TEMPERATURE SENSOR

- Make sure the sensor is in good working order, see 6.6.5 (CHECKING THE COOLANT THERMISTORS OPERATION).
- Test the dashboard operation by connecting a resistance between the white-black and white-red wires of the two-way connector (1):

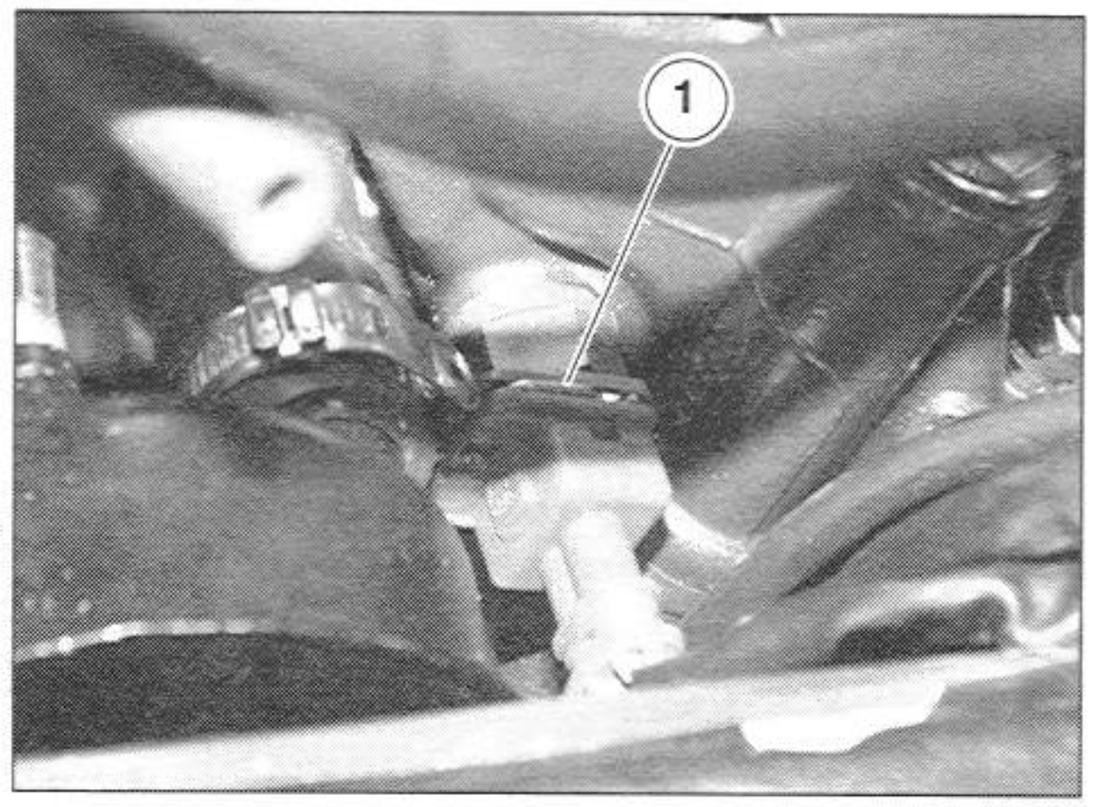

With resistance = 90 Ω:

dashboard indicator: 9 wedges lit (the last two flashing).
degree indicator:
- from 126°C to 135°C.
- from 258.8°F to 275°F.

With resistance = 1600 Ω
dashboard indicator: 1 wedge lit.
degree indicator: "- - -"

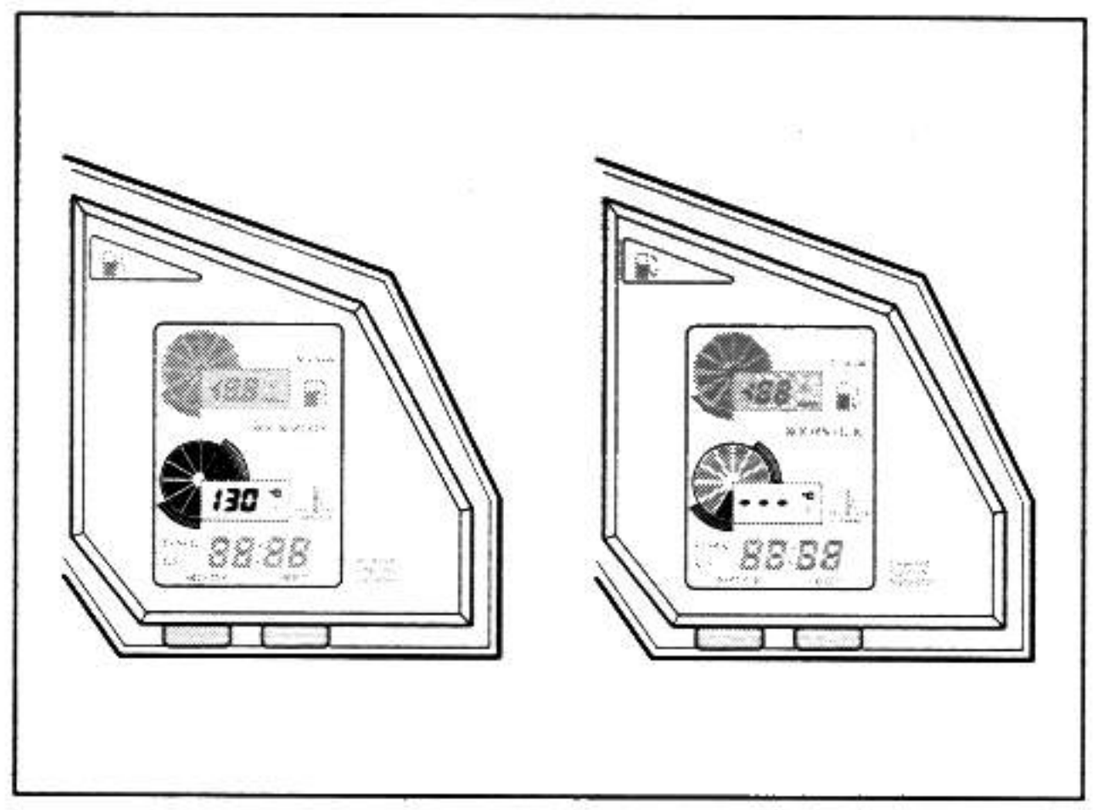

6.11 LIGHT SYSTEM

6.11.1 WIRING DIAGRAM

NOTE For the locations of the components, see 6.1 (LOCATIONS OF ELECTRICAL COMPONENTS).

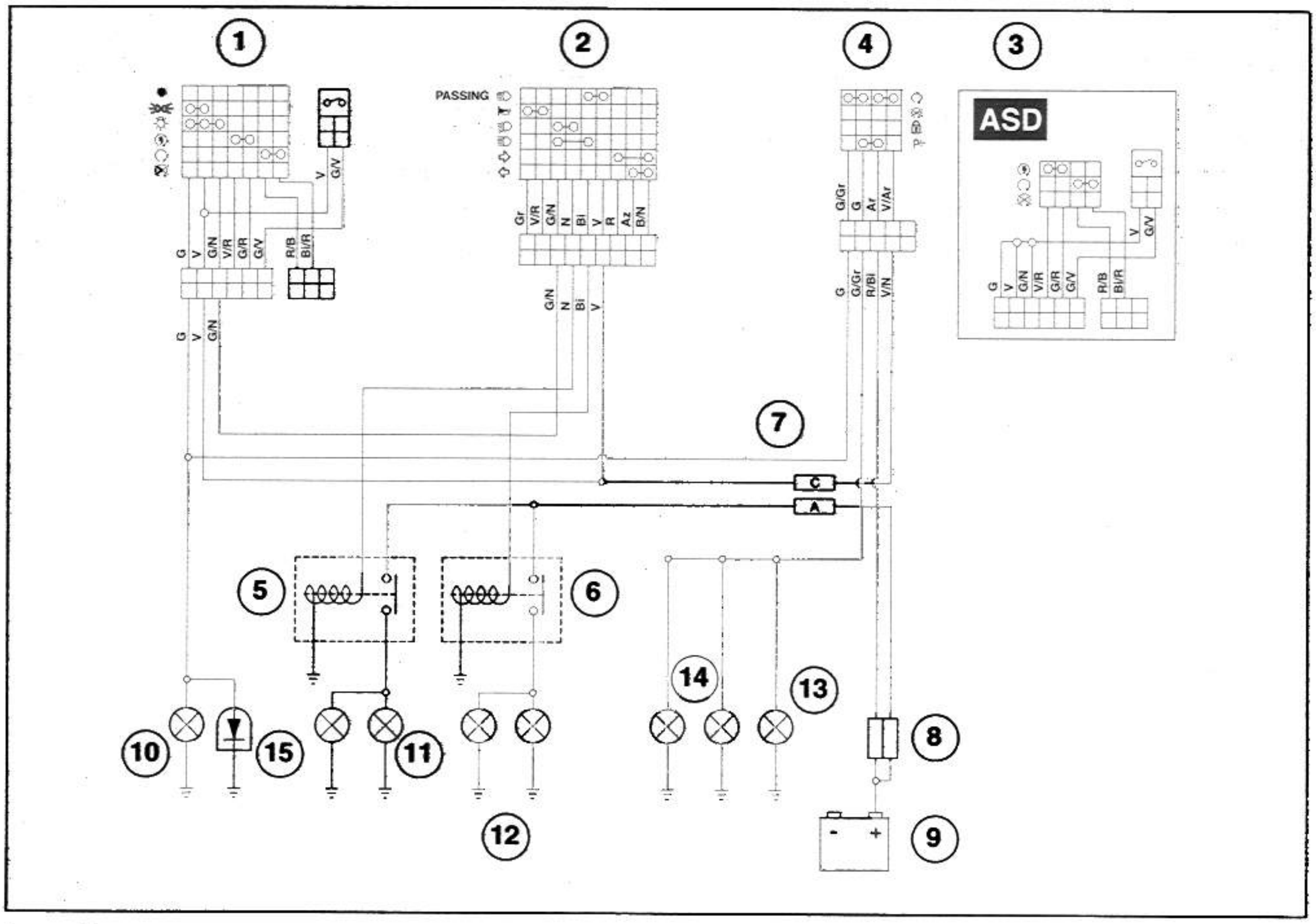

Legend:

1) Right dimmer switch
2) Left dimmer switch
3) Right dimmer switch version ASD
4) Key
5) Low beam relay
6) High beam relay
7) Fuses (15 A)
8) Fuses (30 A)
9) Battery
10) License plate lamp
11) Low beam
12) High beam
13) Front parking light
14) Rear parking light
15) Dashboard light LED

6.11.2 CHECKING THE LIGHT RELAY

To check the relay (1):

- Remove the front fairing, see 7.1.20 (REMOVING THE FRONT FAIRING).
- Remove the relay in question.
- Power the two male terminals (85-86) with a voltage of 12 V.
- Use a tester (in ohm meter mode) to check the continuity between the other two terminals (87-30).

Correct value with relay energized: 0 Ω
Correct value with relay not energized: ∞ Ω

If the values do not match those indicated, replace the relay in question.

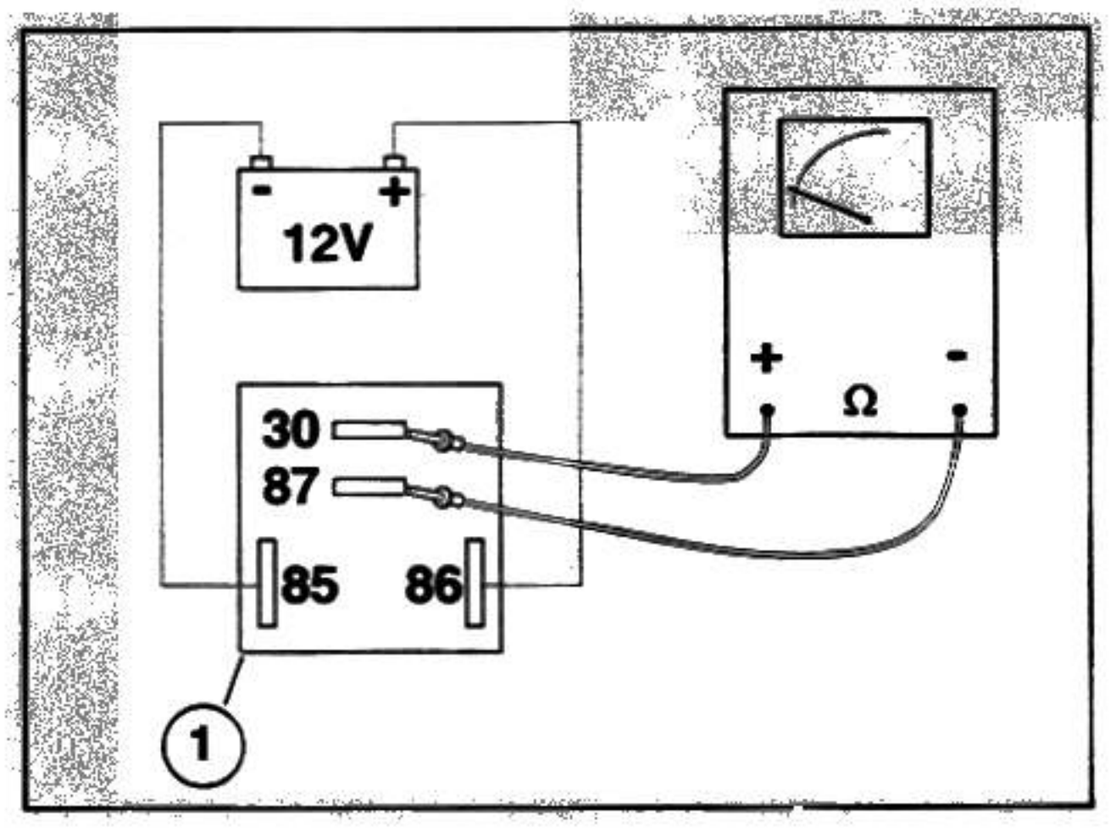

6.12 WARNING LIGHTS AND BUZZERS

6.12.1 WIRING DIAGRAM

NOTE For the positions of the components, see 6.1 (LOCATIONS OF ELECTRICAL COMPONENTS).

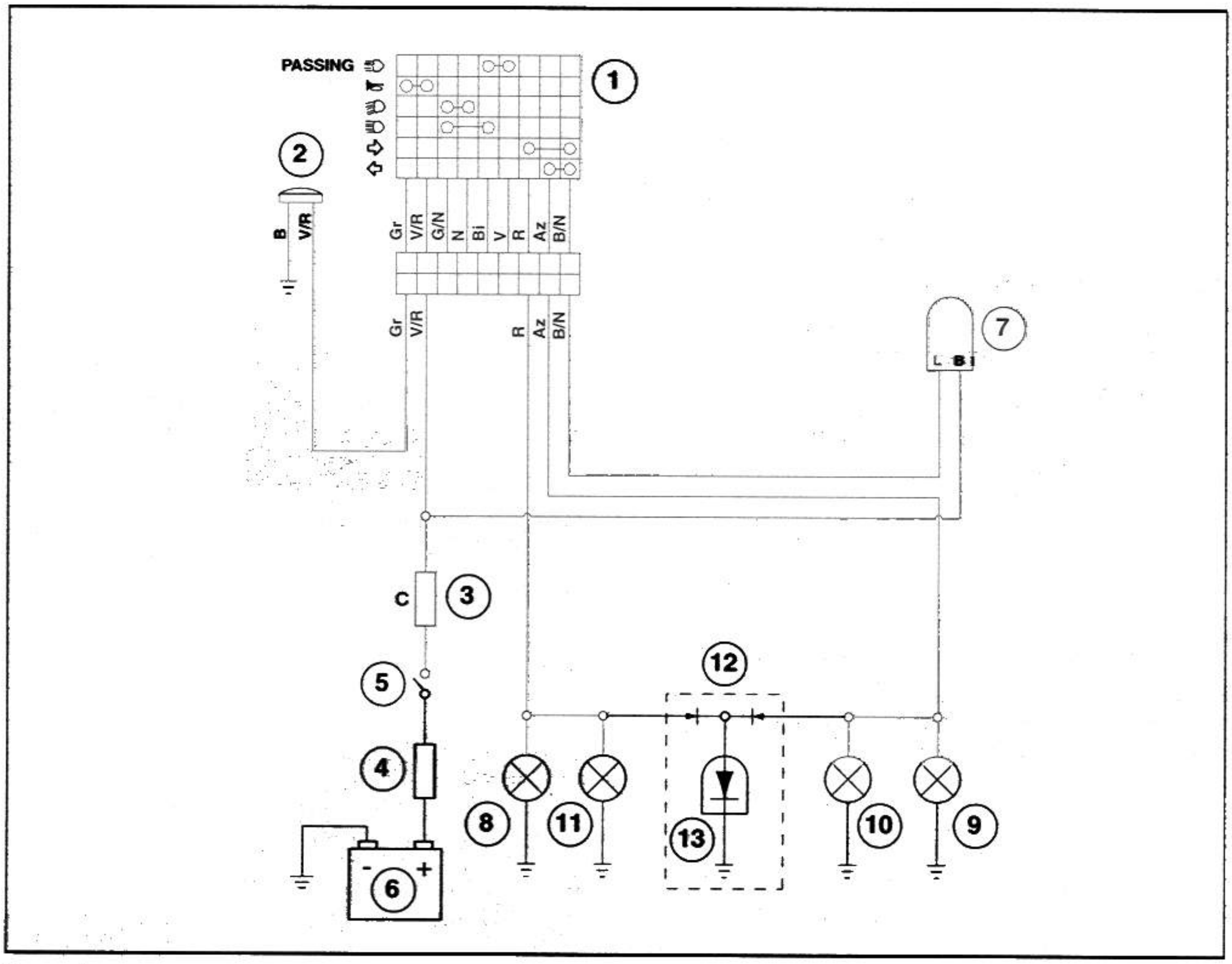

Legend:

1) Left dimmer switch
2) Horn
3) Fuse (15 A)
4) Fuse (30 A)
5) Key
6) Battery
7) Flasher
8) Rear right direction indicator bulb
9) Rear left direction indicator bulb
10) Front right direction indicator bulb
11) Front left direction indicator bulb
12) Dashboard
13) Direction indicators (LED)

6.12.2 HORN TEST

To check the horn efficiency:

- Carry out the first three steps described in paragraph 7.1.27 (REMOVING THE HORN).
- Connect the two horn connectors to a 12 V battery.
- Adjust the adjuster screw if needed.

6.12.3 FLASHER TEST

If neither of the direction indicator lamps is working, there is probably a problem with the flasher.

To test the flasher operation:

- Remove the front fairing, see 7.1.20 (REMOVING THE FRONT FAIRING).
- Disconnect the two connectors (1) of the flasher (2).
- Jumper the two connectors (1).
- Activate the direction indicator controls (3).

If the lights remain steadily lit, replace the flasher (2).

- If necessary, check:
- the main fuses (30 A) and the electrical system.

If one of the indicator bulbs burns out, the other lamp and the warning LED on the dashboard remain steadily lit whenever the control (3) is activated.

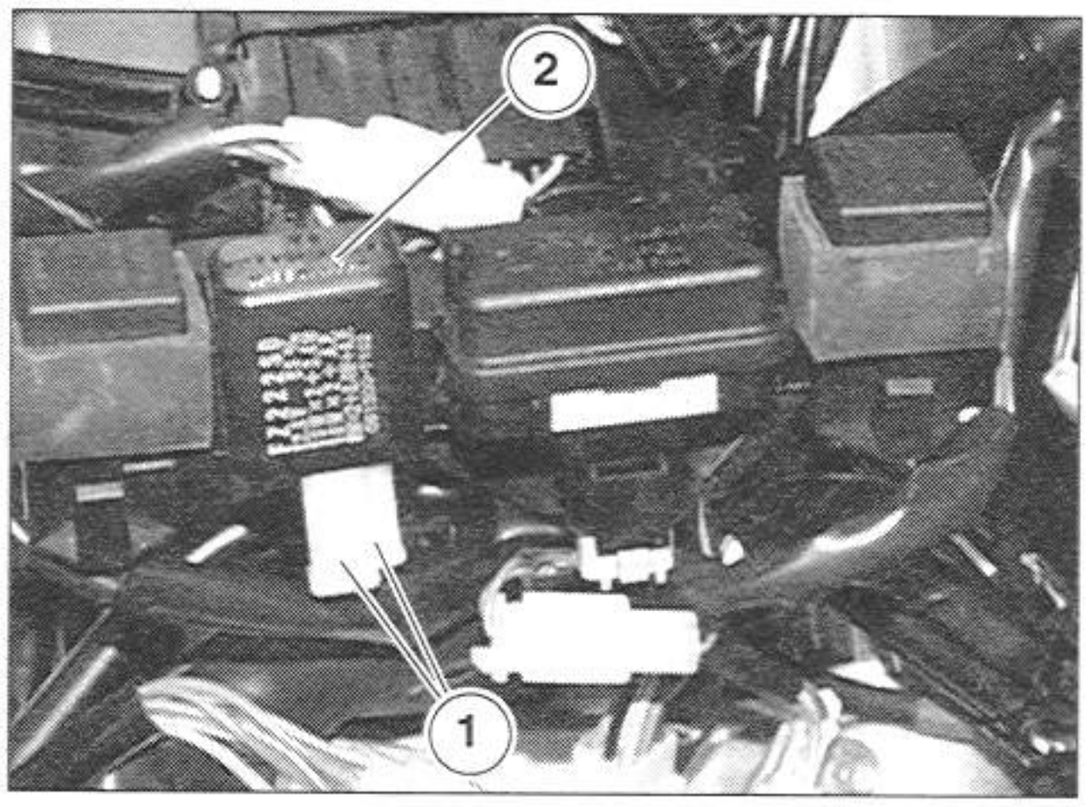

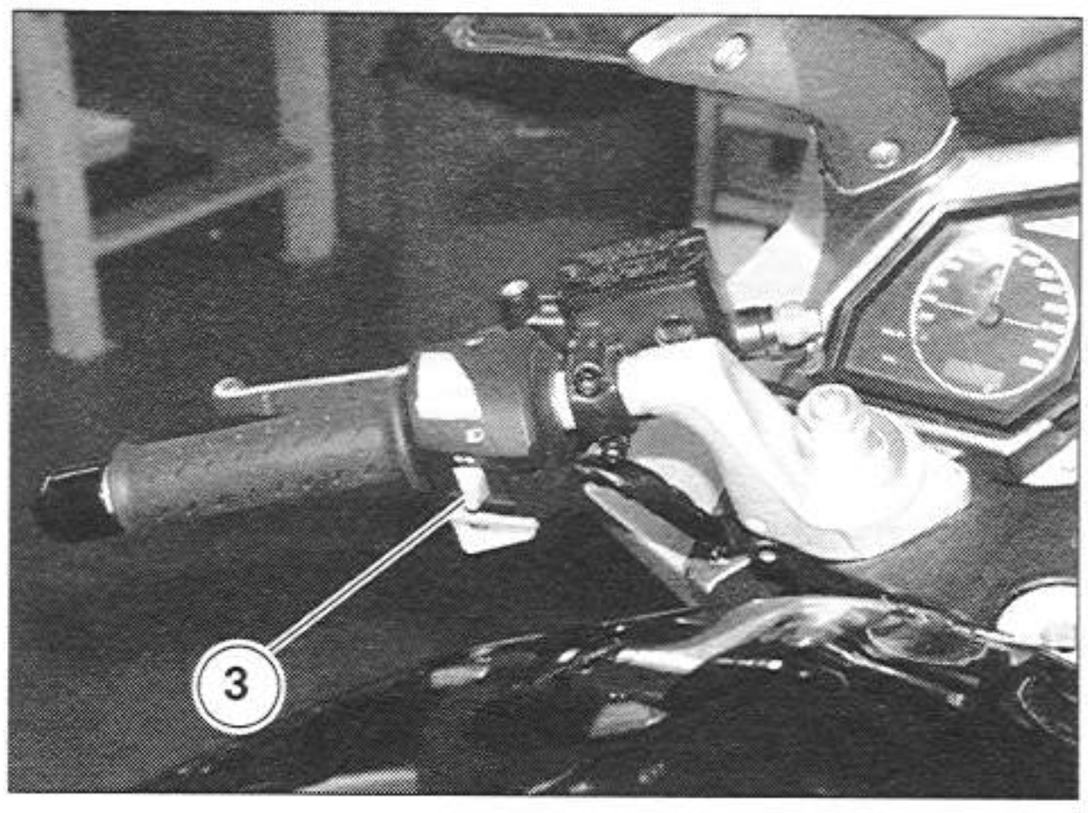

6.13 WARNING LIGHTS AND BUZZERS

6.13.1 WIRING DIAGRAM

NOTE For the positions of the components, see 6.1 (LOCATIONS OF ELECTRICAL COMPONENTS).

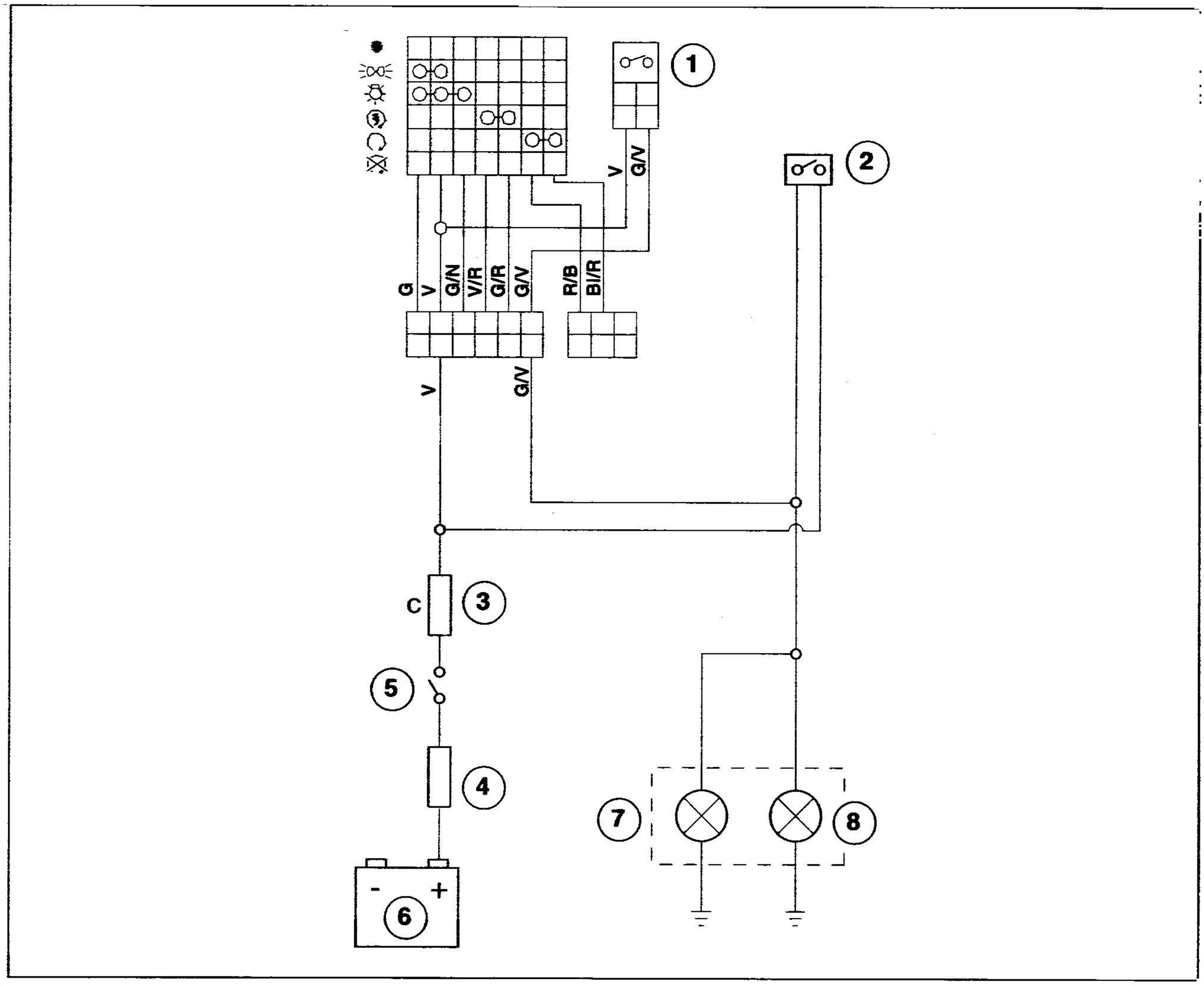

Legend:

1) Front stop switch
2) Rear stop switch
3) Fuse (15 A)
4) Fuse (30 A)
5) Key
6) Battery
7) Taillight
8) Brake lights

6.13.2 SWITCHES

Use a tester to check the continuity of the switches, referring to the specific diagram.
Should you detect anything out of order, replace the corresponding group of switches.

1) BRAKE LIGHT SWITCH ON FRONT BRAKE

Pos.	Cables	
	V	V/G
Activated	○	○

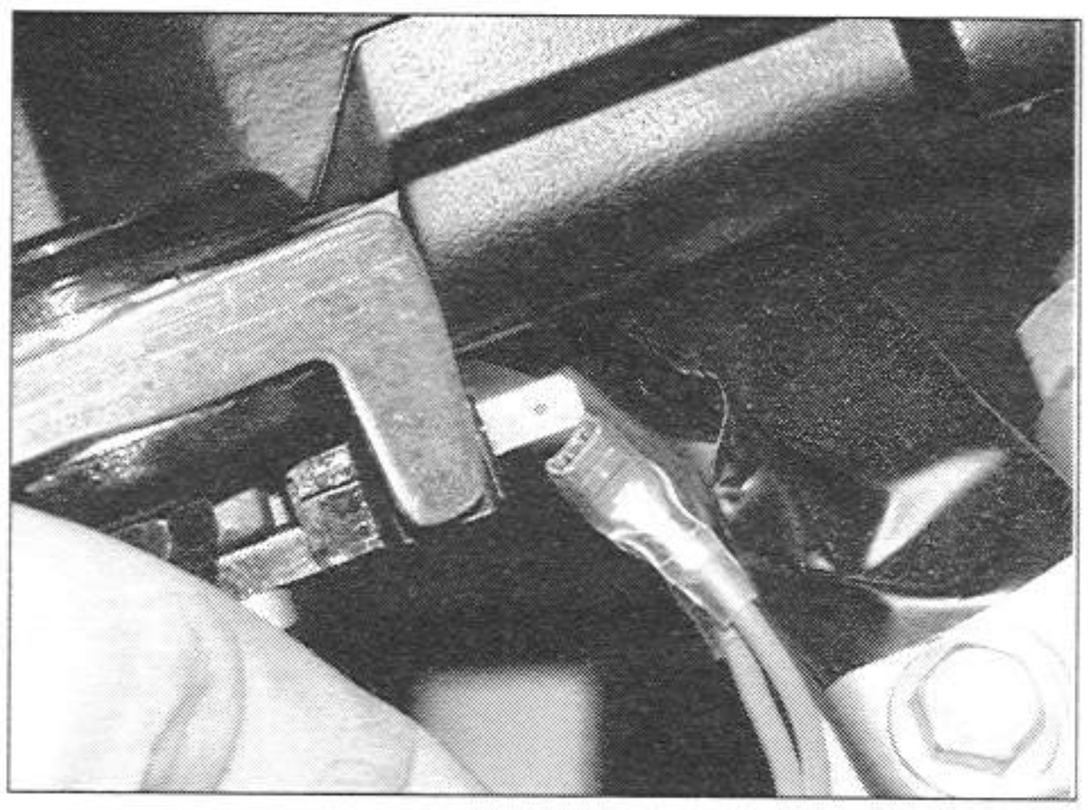

2) BRAKE LIGHT SWITCH ON REAR BRAKE

Pos.	Cables	
	Gr	M
Activated	○	○

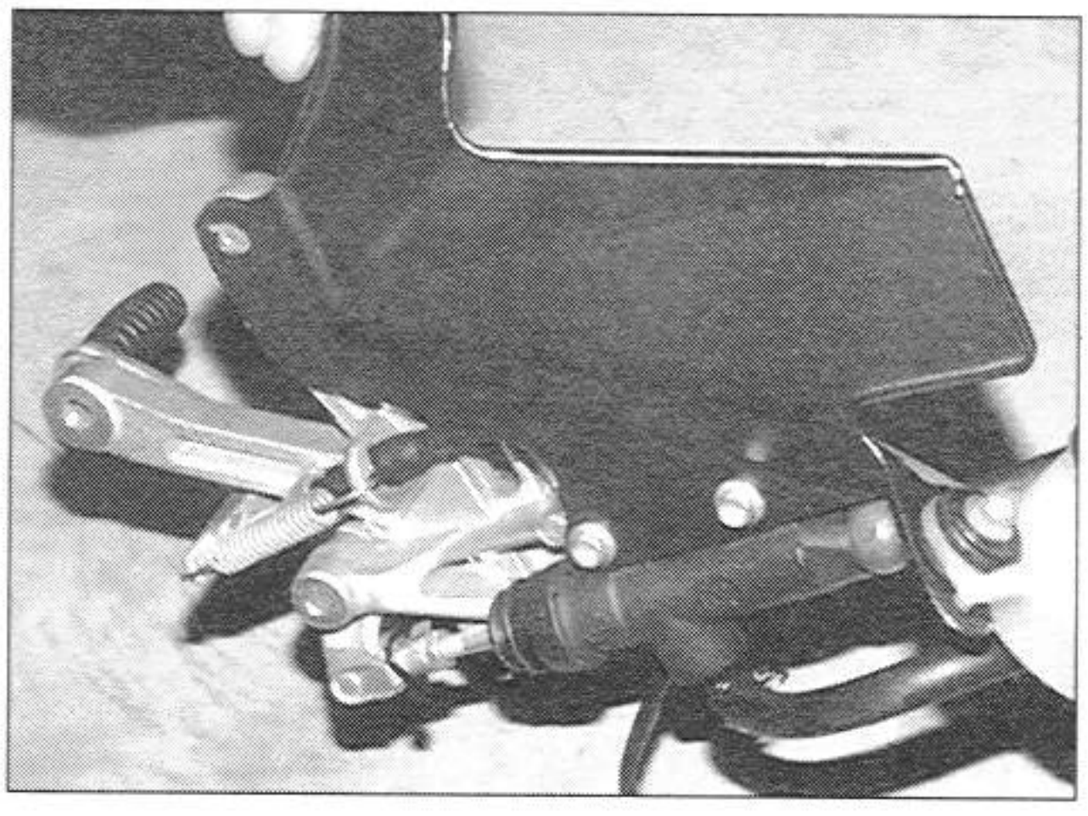

6.14 BATTERY

NOTE This vehicle is equipped with a sealed maintenance-free battery. It requires no maintenance beyond standard inspections and recharging if needed.

Always replace the battery with one of the same type.

Type: 12V - 12 Ah

Carefully read 2.4 (BATTERY).

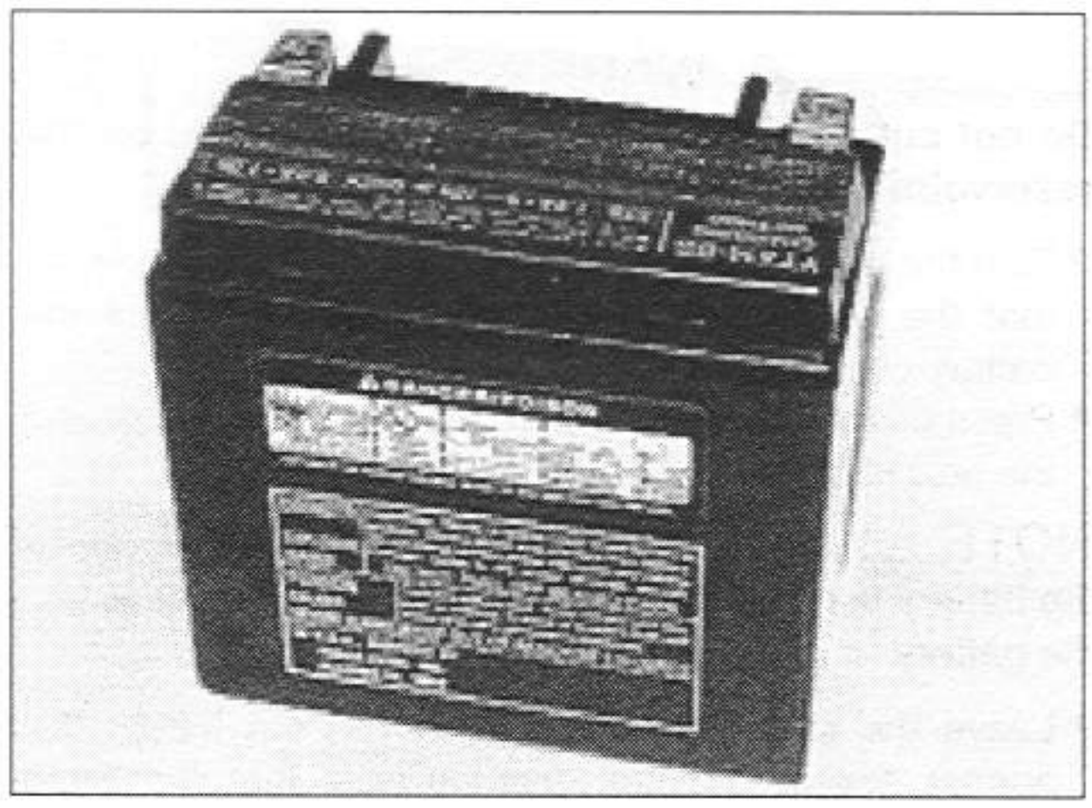

6.14.1 ACTIVATING THE BATTERY

- Remove the battery from the vehicle, see 7.1.9 (REMOVING THE BATTERY).

⚠ DANGER

Battery electrolyte is toxic and caustic, and can severely burn your eyes or skin since it contains sulfuric acid.
Always wear protective clothing, a safety mask and/ or goggles while activating the battery.

If the electrolyte fluid comes into contact with your skin, rinse thoroughly with cool running water.

Should it accidentally contact your eyes, flush immediately with running water for fifteen minutes, then immediately seek professional medical attention.

If someone should accidentally swallow battery electrolyte, drink large amounts of milk or water, then continue with milk of magnesia or vegetable oil. See a physician immediately.

Since the battery gives off explosive hydrogen gas, keep away from open flames, sparks or cigarettes, or any other source of heat.

When you are charging or using a battery, make sure that the room is properly ventilated; do not inhale the gases released during charging.

KEEP OUT OF REACH OF CHILDREN

The battery fluid is corrosive.

Do not spill or spatter it, especially on plastic parts.

⚠ WARNING

Make sure that the electrolyte liquid being used is specific for the battery to be activated.

- Place the battery on a flat surface.
- Remove the adhesive sealing label (1).
- Remove the sealed bag from the cardboard container containing the six reservoirs (2).
- Remove the reservoirs (2) from the bag.

NOTE Keep the row of stoppers (3) handy as you will need them later to cap the battery cells.

- Disconnect the row of stoppers (3) from the top of the reservoirs (2).

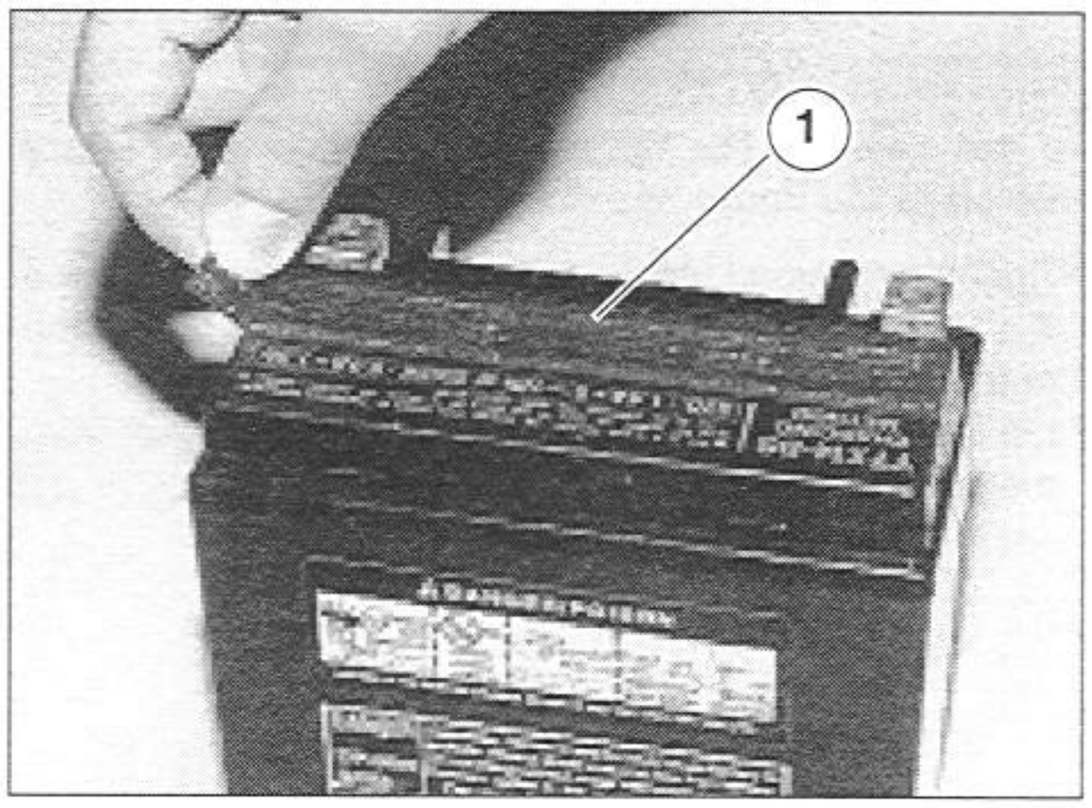

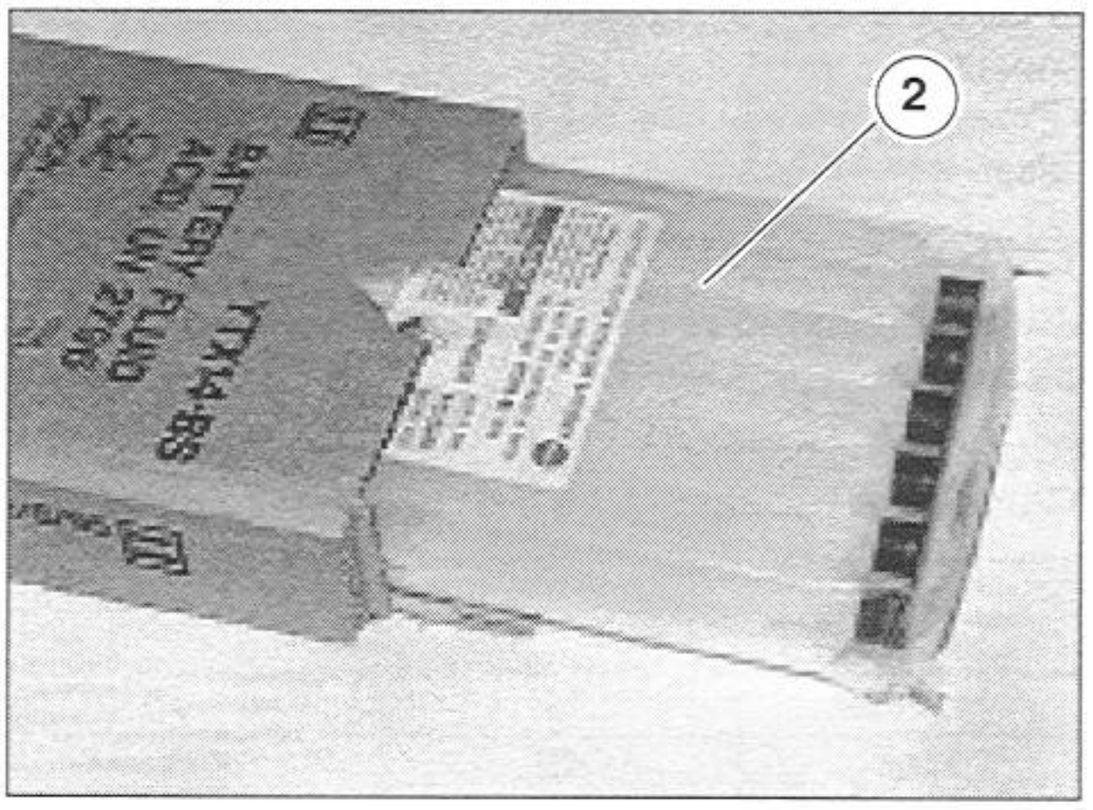

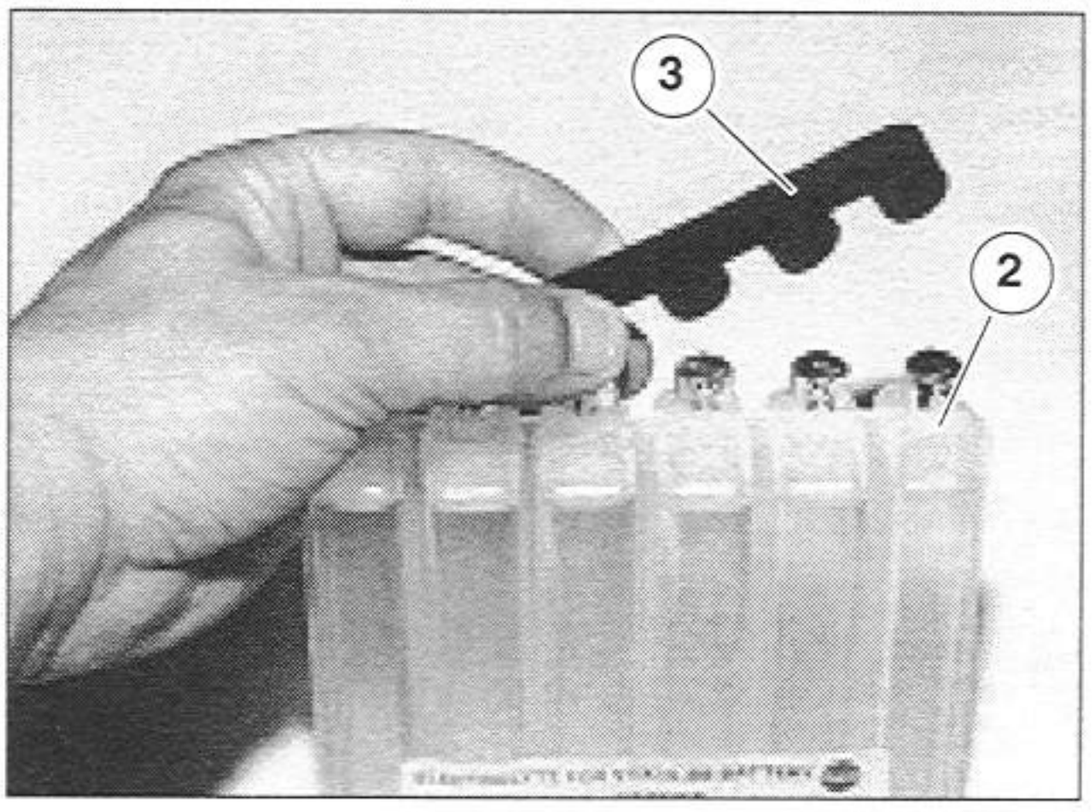

⚠ WARNING

Do not cut or make holes in the sealed parts on the reservoirs (2).

- Turn the reservoirs (2) upside down and place them so that the sealed parts are over the openings of the battery cells.
- Press on the reservoirs (2) so that the seals break and the acid is allowed to drain into the battery cells.

NOTE Ensure that the reservoirs (2) are placed above the battery vertically, to enable all of the liquid to flow into the battery.

- Leave the reservoirs (2) in place on the battery for approx. twenty minutes, making sure that the liquid drains out smoothly.

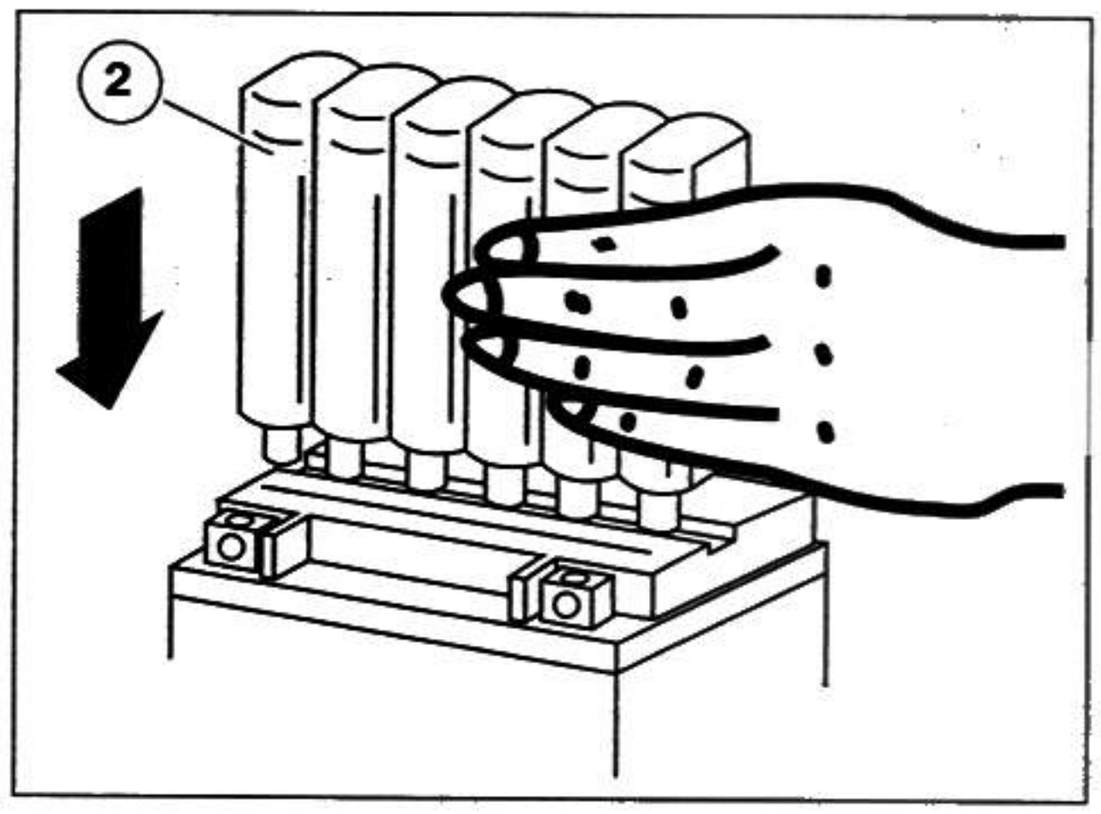

⚠ WARNING

Do not remove the reservoirs (2) from the battery until all of the liquid has drained.

- Should any liquid still be left in the reservoirs (2) once the twenty minutes are up, tap your fingers on the top of the reservoirs to help the remaining liquid out.
- Lift the reservoirs (2) with care, disengaging them from the battery.

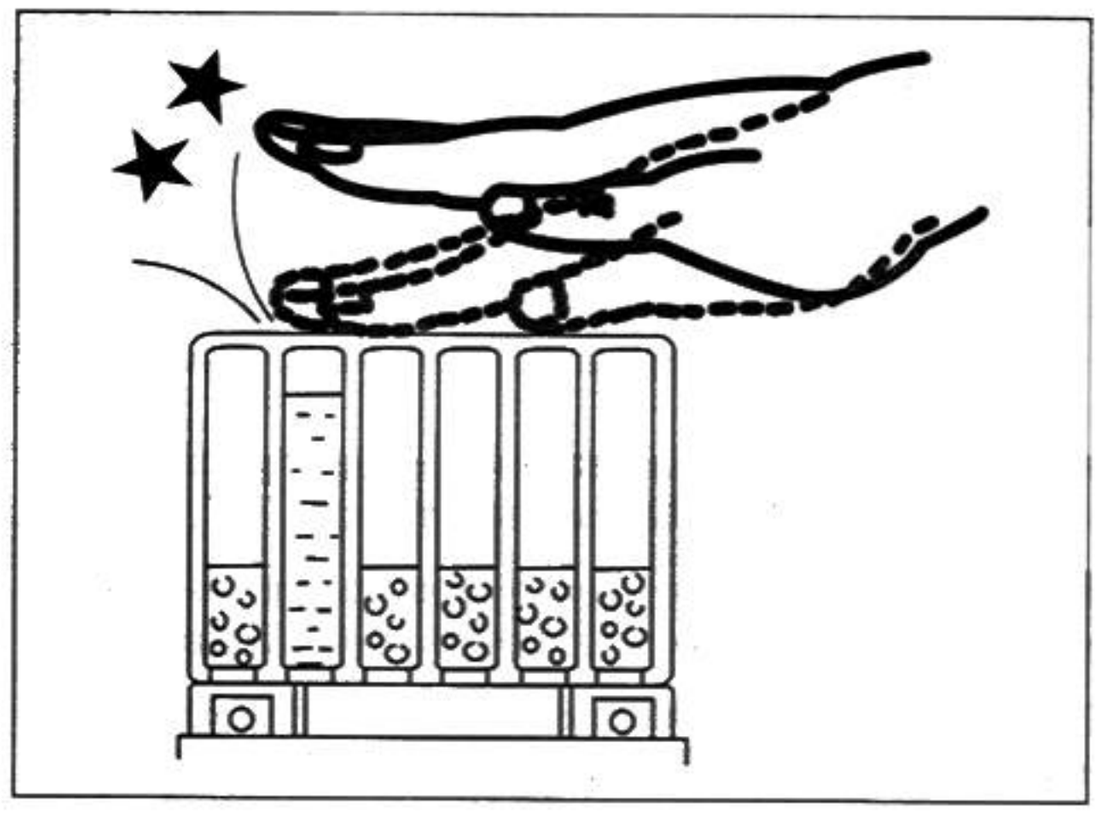

- Place the row of stoppers (3) over the battery cell openings.
- Press down firmly until the tops of the stoppers (3) are flush with the top of the battery.

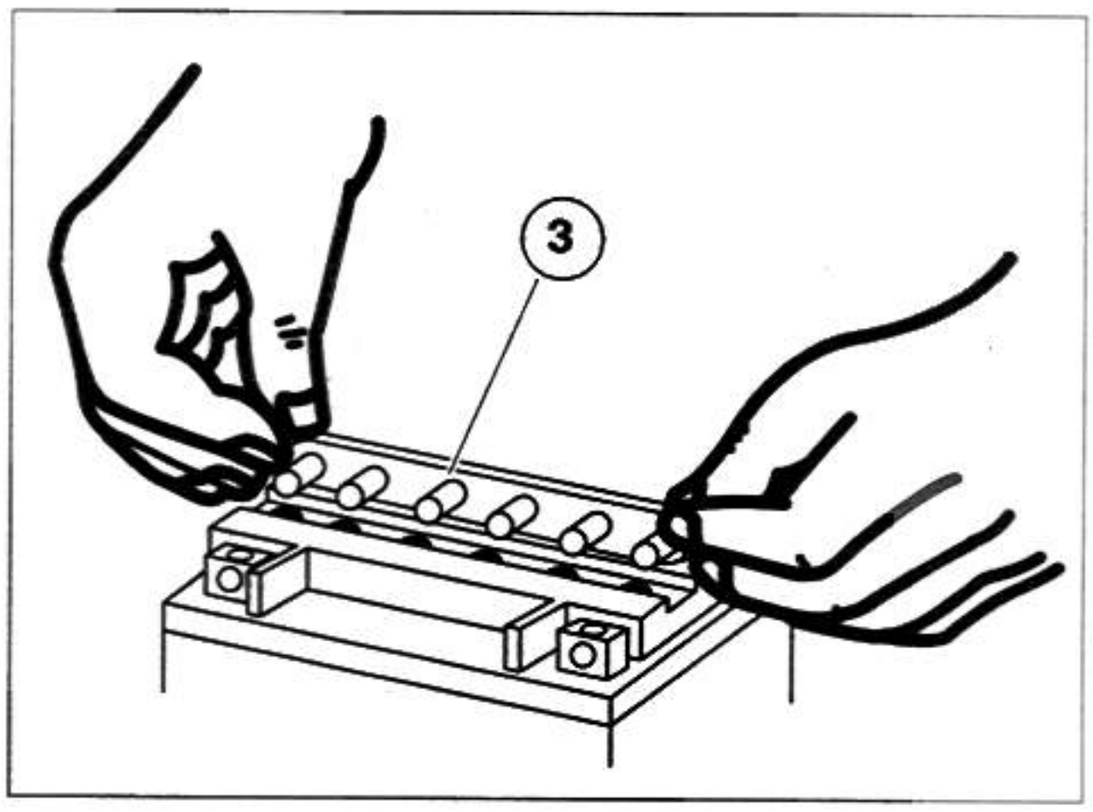

⚠ WARNING

NEVER attempt to remove the row of stoppers (3) for any reason.

- Connect the battery to a battery charger.
- Subject the battery to a normal charge (see table).

Type of charge	Voltage (Amperes)	Time (hours)
Normal	1,2	8 ÷ 10
Fast	12	0,5

- Re-install the battery on the vehicle upon return to the customer.

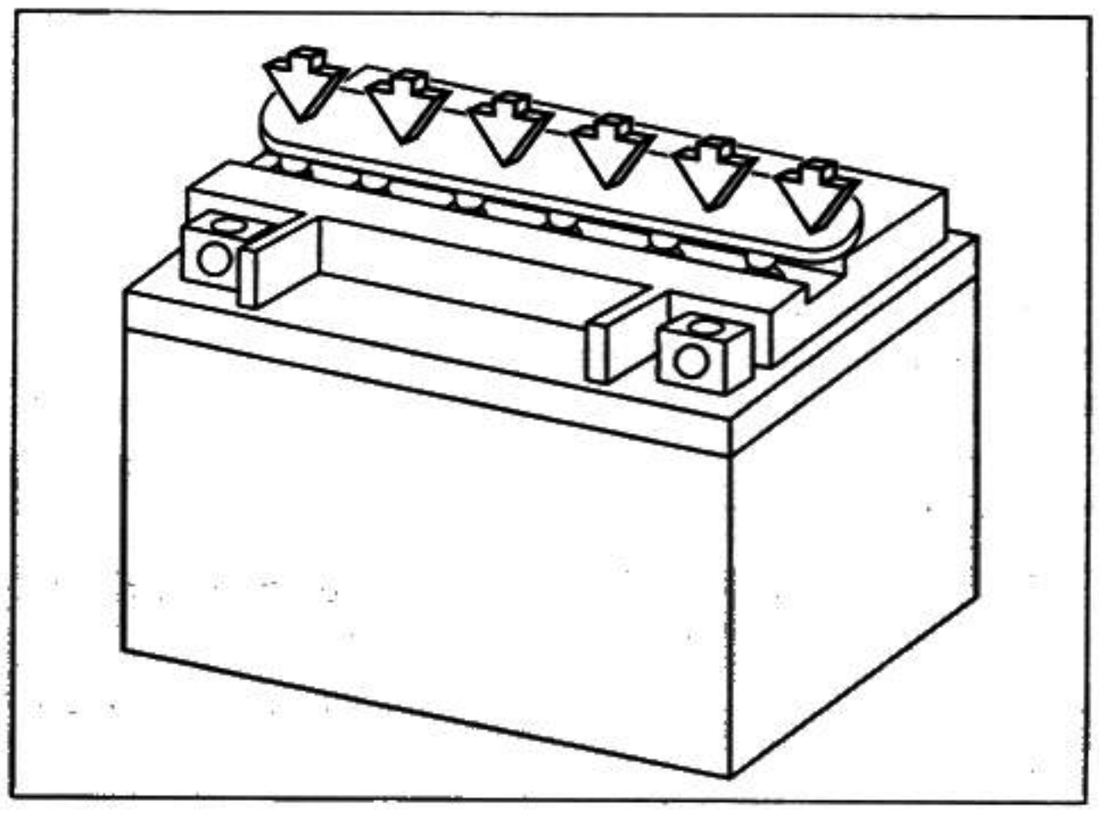

6.14.2 MAINTENANCE

- If the vehicle remains unused for more than fifteen days, the battery must be recharged to prevent sulphation. Recharge the battery using a normal charge, see 2.4.2 (RECHARGING THE BATTERY).
- Smear a thin film of neutral grease or Vaseline on the terminals.

6.14.3 CHECKING

Should you run into any difficulty with the battery maintaining a charge, first check the recharging circuit to make sure it is functioning correctly; see 6.3 (CHECKING THE RECHARGING SYSTEM).

Also make sure that:

- There are no signs of damage (external case cracked) and no electrolyte leak.
- The cables are firmly connected to the terminals.
- Apply a normal charge for at least 10 hours.

⚠ WARNING

After recharging, check the open-circuit voltage again: if it is below 12V, the battery must be replaced.

6.14.4 RETURN UNDER WARRANTY

The warranty is void if the battery shows:

- Damage (container dented, poles bent, etc.).
- Widespread sulphation (incorrect activation and/or misuse of the battery).

6.15 REPLACING THE BULBS

Carefully read 1.3.9 (PRECAUTIONS AND GENERAL INFORMATION).

⚠ WARNING

Before replacing a bulb, turn the ignition switch to the "⊗" position.
Always wear clean gloves or use a clean, dry cloth to change the bulb.
Do not leave fingerprints on the bulb, since the oils left by your skin may cause it to overheat and break.
If you touch the bulb with your bare hands, clean it with alcohol to remove any fingerprints and thus avoid unnecessary damage.
DO NOT FORCE THE ELECTRICAL CABLES.

6.15.1 REPLACING THE HEADLIGHT BULBS

◆ Place the vehicle on the stand.

NOTE Before replacing a bulb, check the fuses, see 6.16 (CHANGING FUSES).

The headlight houses:
- two high beam bulbs (1) (side);
- one parking light bulb (2) (lower);
- one low beam bulb (3) (lower).

NOTE It is necessary to remove the right and left dashboard panels when replacing the low beam and high beam bulbs.
The lower saddle panel must be removed to replace the parking light bulb.

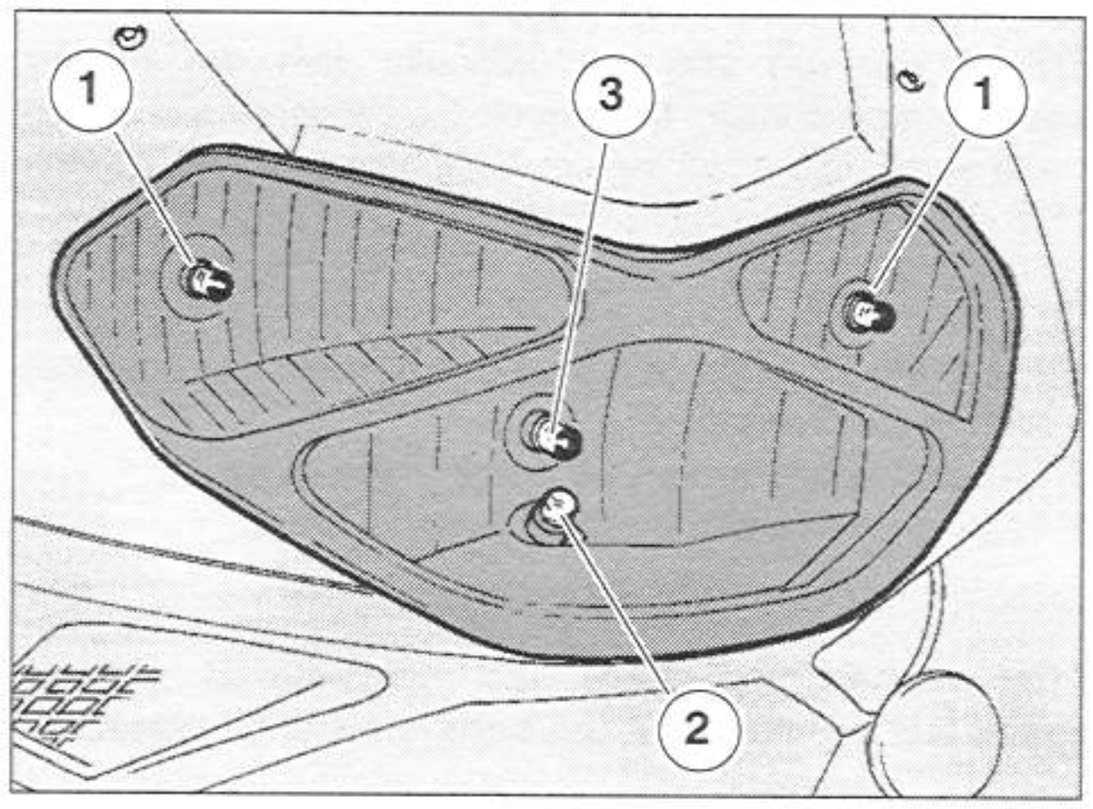

To replace:

HIGH BEAM BULBS

NOTE Work on the same side as the bulb to be replaced.

NOTE Remove one connector at a time to avoid returning them to the incorrect position during reassembly.

If the bulb sockets must all be removed at the same time, take great care to reassemble them in the proper position.

◆ Remove the dashboard panel, see 7.1.20 (REMOVING THE FRONT FAIRING).

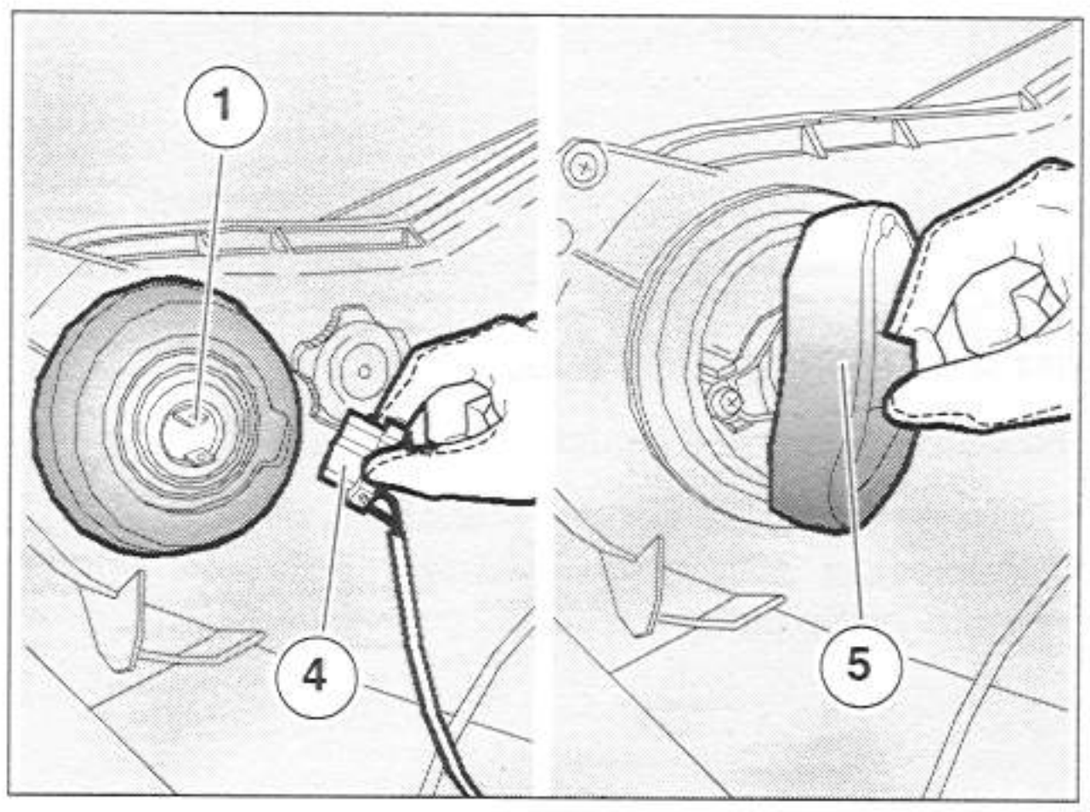

⚠ WARNING

Do not pull the electrical cables to extract the bulb socket.

◆ Grasp the socket for the bulb to be replaced (4), pull and disconnect it from the bulb (1).
◆ Pull back the boot (5) with your fingers.
◆ Release the retainer spring (6) located behind the bulb seat (7).
◆ Extract the bulb (1) from its seat and replace it with another of the same type.

NOTE When inserting the bulb in bulb seat, line up the positioning marks.

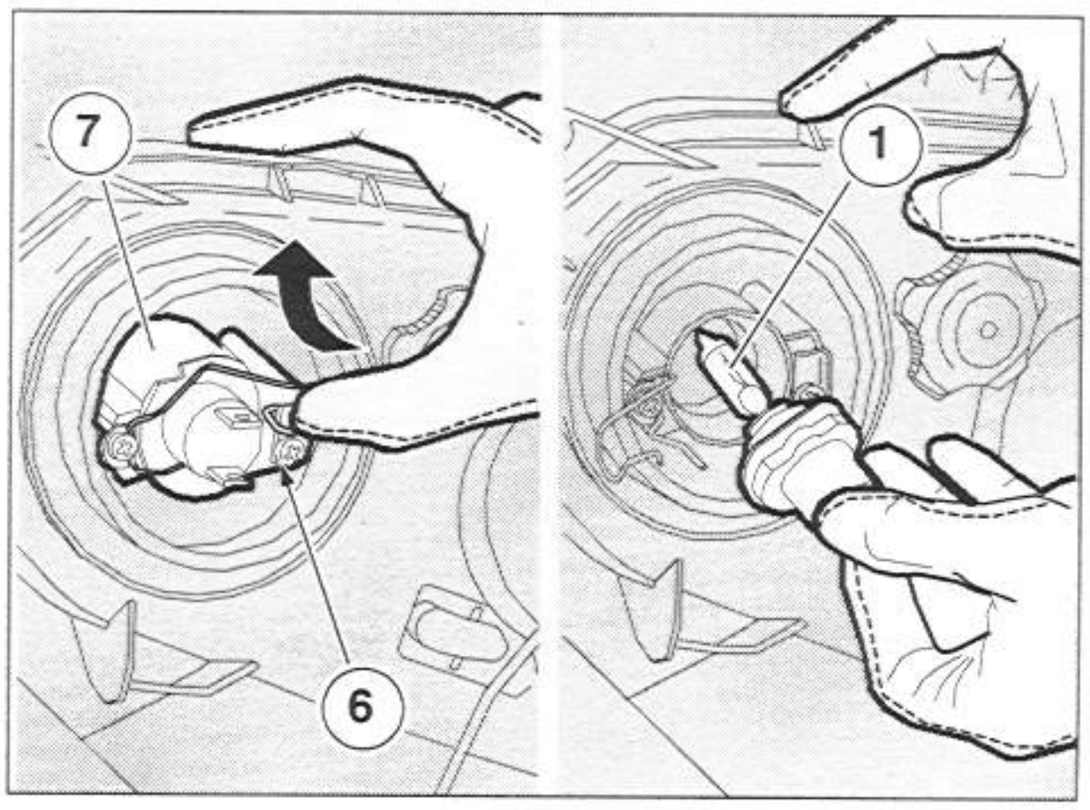

PARKING LIGHT BULB

- Remove the lower front panel, see 7.1.32 (REMOVING THE FRONT FAIRING LOWER LOCKUP).

⚠ WARNING

Do not pull on the wires to remove the bulb socket.

- Grasp the parking light socket (8), pull it and remove it from its seat.
- Remove the bulb (2) and replace it with another of the same type.

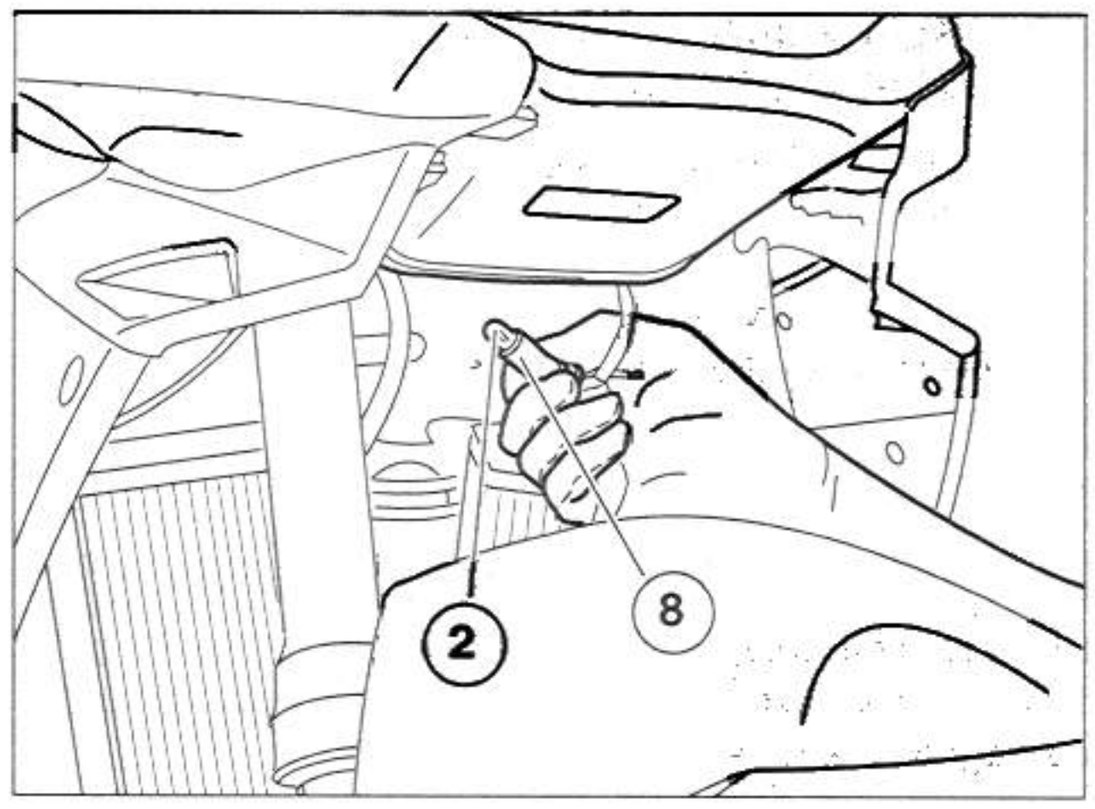

LOW BEAM BULB

NOTE Remove one socket at a time to avoid returning them to the incorrect position during reassembly.

If the bulb sockets must all be removed at the same time, take great care to reassemble them in the proper position.

- Remove the right dashboard panel, see 7.1.20 (REMOVING THE FRONT FAIRING).

⚠ WARNING

Do not pull the electrical cables to extract the bulb socket.

- Grasp the bulb socket (8), pull it and disconnect it from the bulb (3).
- Pull back the boot (10) with your fingers.
- Release the retainer spring (11) located behind the bulb seat (12).
- Extract the bulb (3) from its seat and replace it with another of the same type.

NOTE When inserting the bulb in bulb seat, line up the positioning marks.

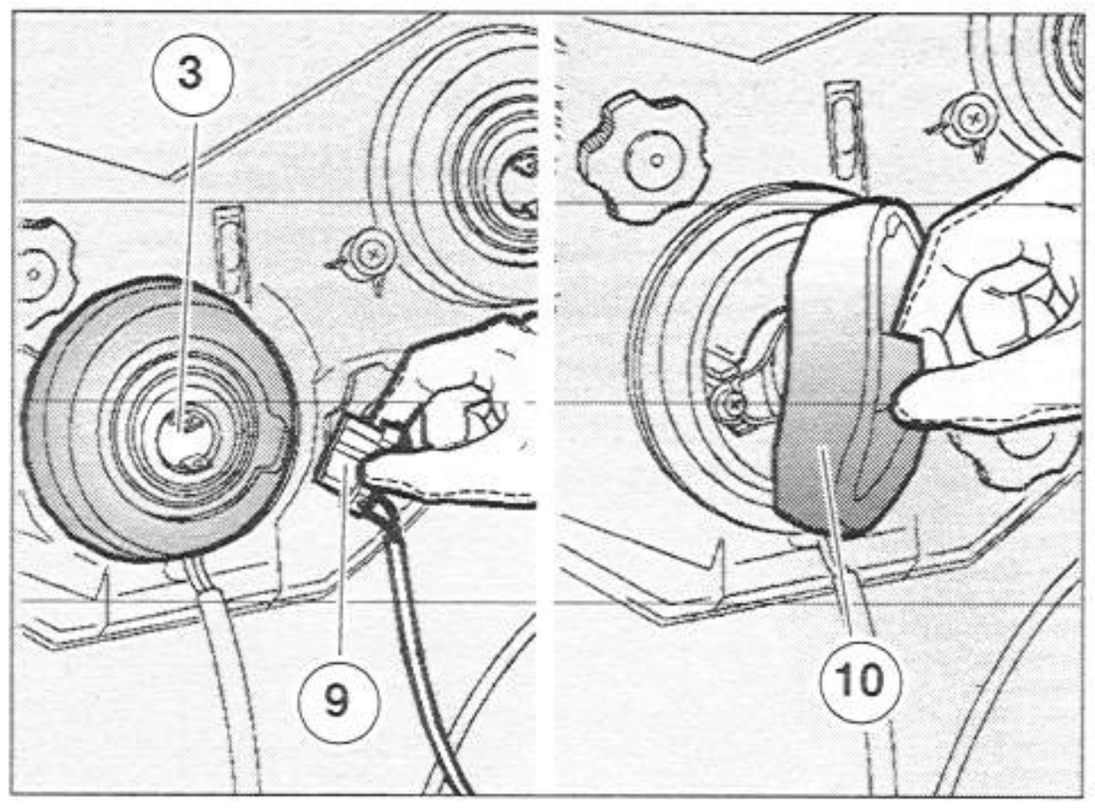

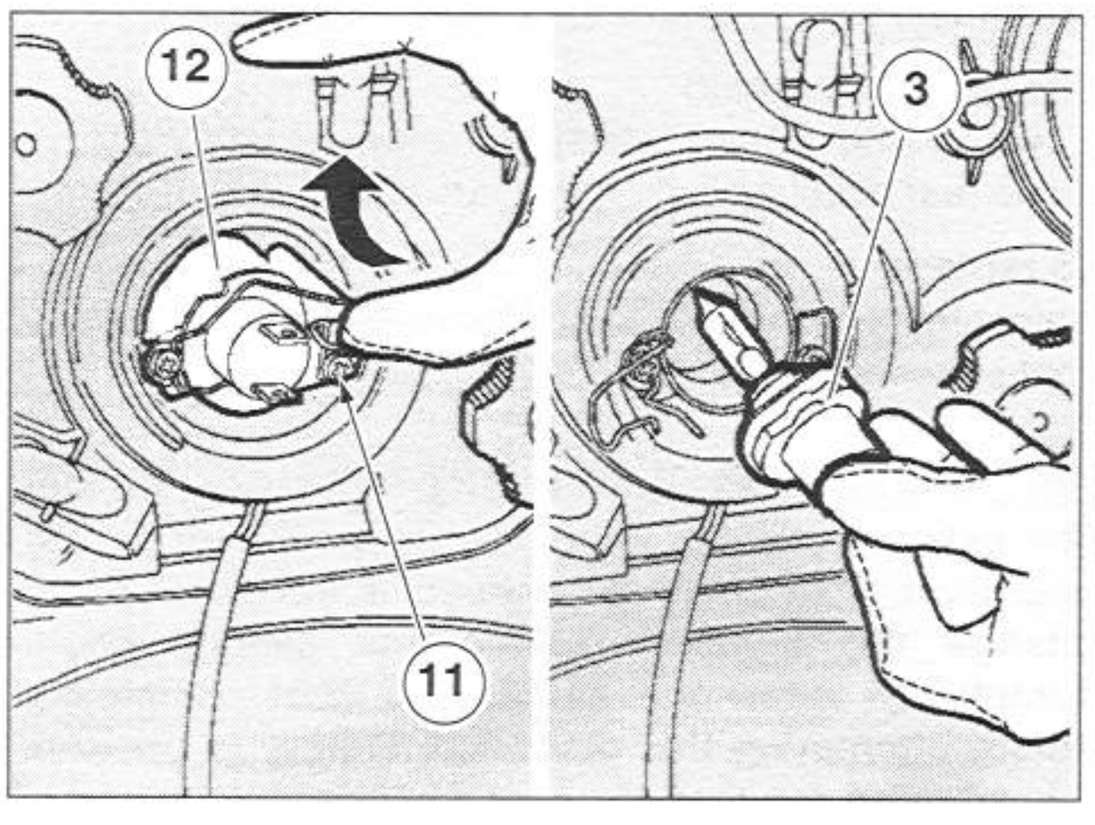

6.15.2 REPLACING THE FRONT DIRECTION INDICATOR LAMPS

- Place the vehicle on the stand.
- Unscrew and remove the screw (1).

⚠ WARNING

While removing the lens, be extra careful not to break the tab.

- Remove the lens (2).

⚠ WARNING

Upon reassembly, place the lens correctly in its seat. Tighten the screw (1) gently and carefully to avoid damaging the lens.

- Push the bulb (3) in slightly and rotate it counter-clockwise.
- Remove the bulb (3) from its seat.

⚠ WARNING

Insert the bulb in the bulb socket, carefully aligning the two bulb pins with their guides in the socket.

- Correctly install a new bulb of the same type.

To replace the rear direction indicator lamps, see 6.15.3 (REPLACING THE TAILLIGHT BULBS).

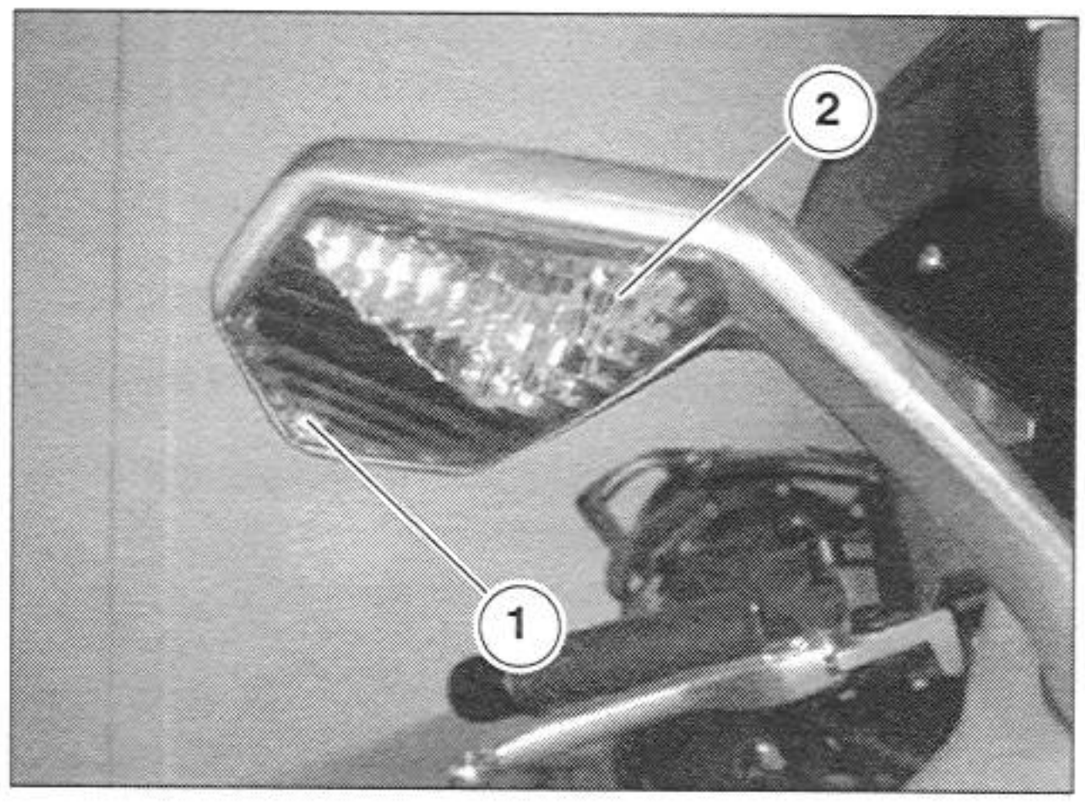

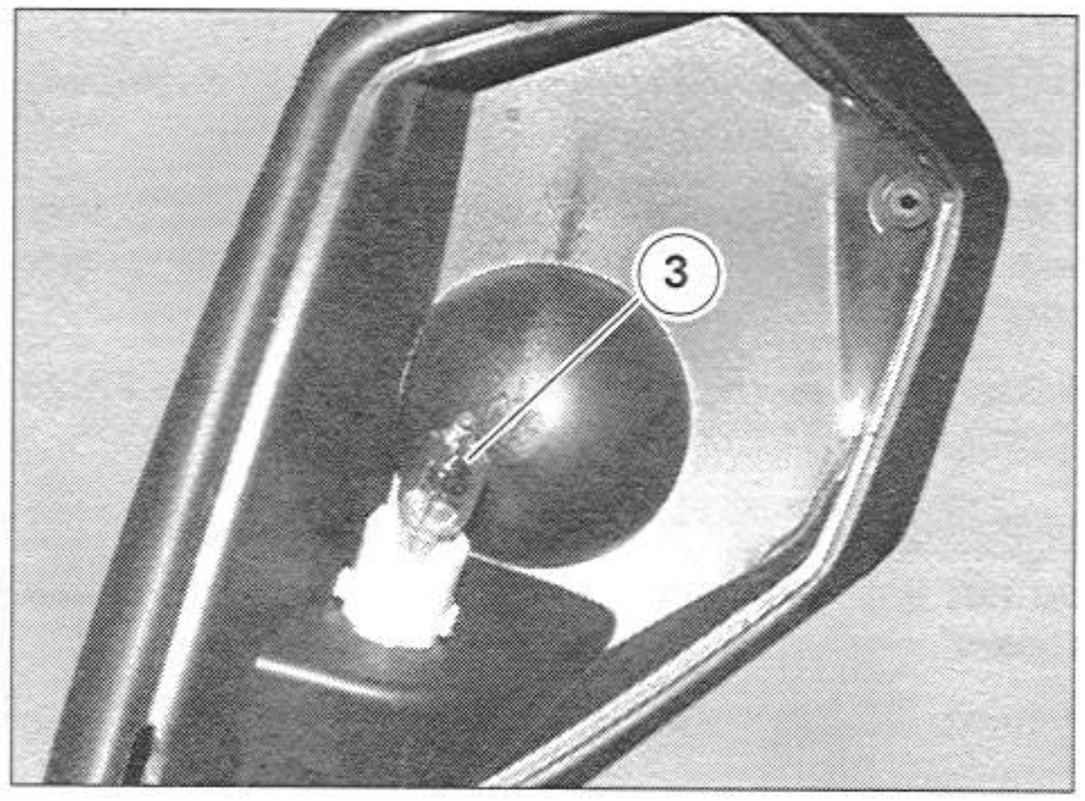

6.15.3 REPLACING THE TAILLIGHT BULBS

The taillight houses:
- two parking light/brake light bulbs (1).
- two rear direction indicator lamps (2).

To replace:
Before replacing a bulb, check the operation of the brake light switches, see 6.13.2 (SWITCHES).

⚠ DANGER

The exhaust silencer becomes extremely hot during operation. You could be burned if you attempt to change the lightbulb before the silence cools completely. Allow the silencer to cool completely before attempting this operation. Failure to observe this warning can lead to serious burns.

⚠ WARNING

Handle with care. Do not force electrical cables.

- Partially remove the taillight, see 7.1.36 (REMOVING THE TAILLIGHT).

⚠ DANGER

Upon reassembly, make sure that the taillight wires are positioned properly to avoid touching the muffler.

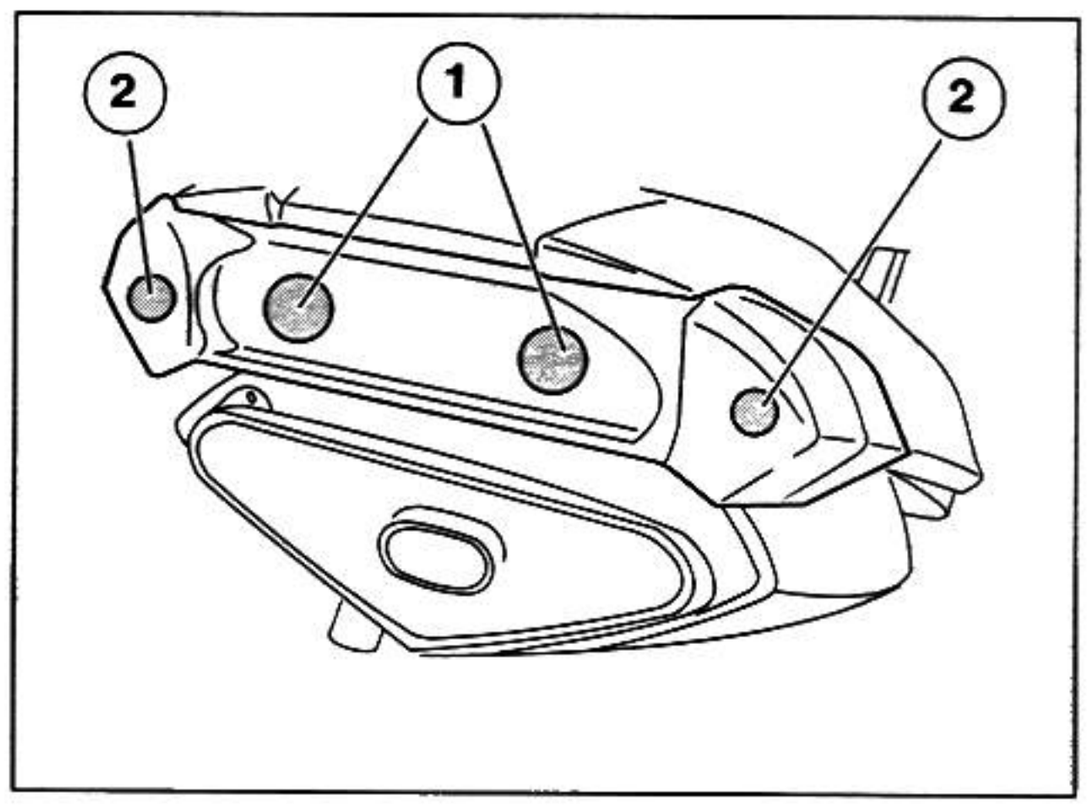

PARKING LIGHT/BRAKE LIGHT BULBS

- Unscrew and remove the two screws (3).
- Partially remove the bulb socket (4).
- Push the bulb (1) in slightly and rotate it counter-clockwise.
- Remove the bulb (1) from its seat.

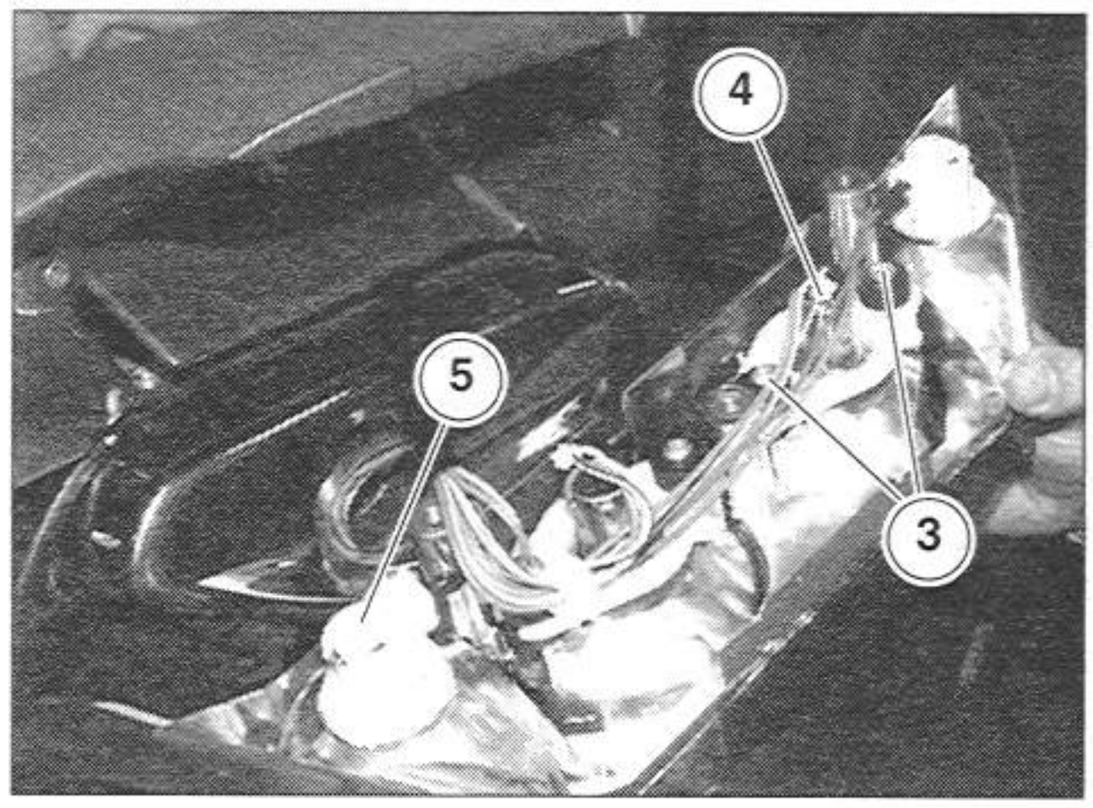

⚠ WARNING

Insert the bulb in the socket, lining up the two bulb pins with the corresponding guides on the socket.

- Correctly install a new bulb of the same type.

REAR DIRECTION INDICATOR LAMPS

NOTE Remove one socket at a time to avoid returning them to the incorrect position during reassembly.

If the bulb sockets must all be removed at the same time, take great care to reassemble them in the proper position.

- Turn the bulb seat (5) counter-clockwise.
- Push the bulb (2) in slightly and rotate it counter-clockwise.
- Remove the bulb (2) from its seat.

⚠ WARNING

Insert the bulb in the socket, lining up the two bulb pins with the corresponding guides on the socket.

- Correctly install a new bulb of the same type.

6.15.4 REPLACING THE LICENSE PLATE LIGHT BULBS

- Place the vehicle on the stand.
- Unscrew and remove the screw (1), retrieving the nut.
- Remove the light assembly (2).

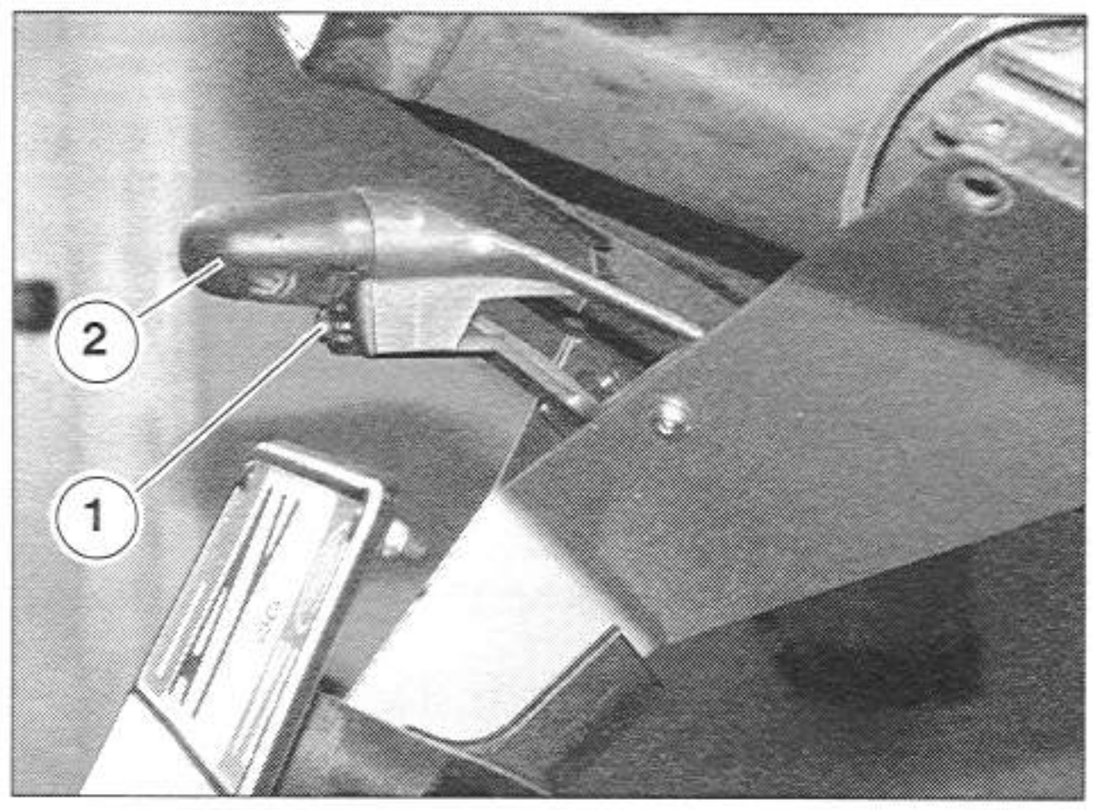

⚠ WARNING

Do not pull on the wires to remove the bulb socket.

- Grasp the socket (3), pull it and remove it from its seat.
- Remove the bulb (4) and replace it with another of the same type.

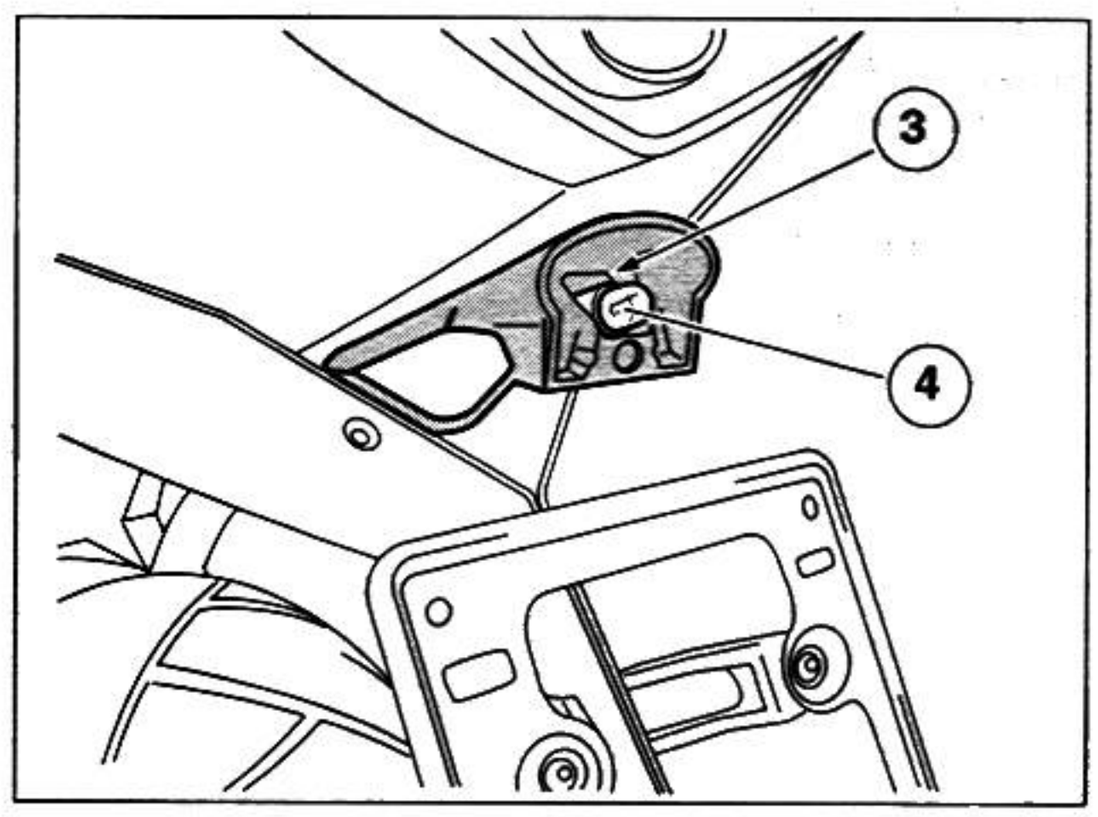

6.16 CHANGING FUSES

Carefully read 1.3.9 (PRECAUTIONS AND GENERAL INFORMATION).

⚠ WARNING

Do not attempt to repair faulty fuses.
Never use any fuses other those specified. Such use could damage the electrical system or even cause a fire, in the event of a short-circuit.

NOTE If a fuse blows frequently, there is probably a short circuit or overload in the electrical system.

Check the fuses whenever an electric component does not work or works irregularly, or if the vehicle fails to start. Check first the 15-A secondary fuses, then the 30-A main fuses.

To check:

- Turn the ignition switch to "⊗" to avoid an accidental short-circuit.
- Remove the lower dashboard panel, see 7.1.20 (REMOVING THE FRONT FAIRING).
- Open the cover of the secondary fuse box (1).
- Remove the fuses one by one, and check to see whether the filament (2) is blown.
- Before replacing the fuse, if possible, try to determine the cause of the problem.
- Replace any blown fuse with a new fuse with the same amperage rating.

NOTE If you use the spare fuse, replace it as soon as convenient.

- Remove the saddle, see 7.1.1 (REMOVING THE SADDLE).
- Follow the same procedure described above for secondary fuses to check and replace the main fuses.

NOTE Removing the 30 A fuses will reset the functions: digital clock and red line setting. To reset these functions, see 2.3 (MULTIFUNCTION COMPUTER).

LAYOUT OF THE 15-A SECONDARY FUSES

A From voltage regulator to: headlight, dashboard.
B From voltage regulator to: fuel pump.
C From ignition switch to: parking lights, rear brake lights, horn, direction indicators.
D From ignition switch to: starting, safety logic.
E From ignition switch to: not used.

NOTE There are three spare fuses

LAYOUT OF THE 30-A MAIN FUSES

F From battery to: voltage regulator, fuse A, fuse B and fuse C.
G From battery to: ignition switch, fuse C, fuse D.

NOTE There is one reserve fuse.

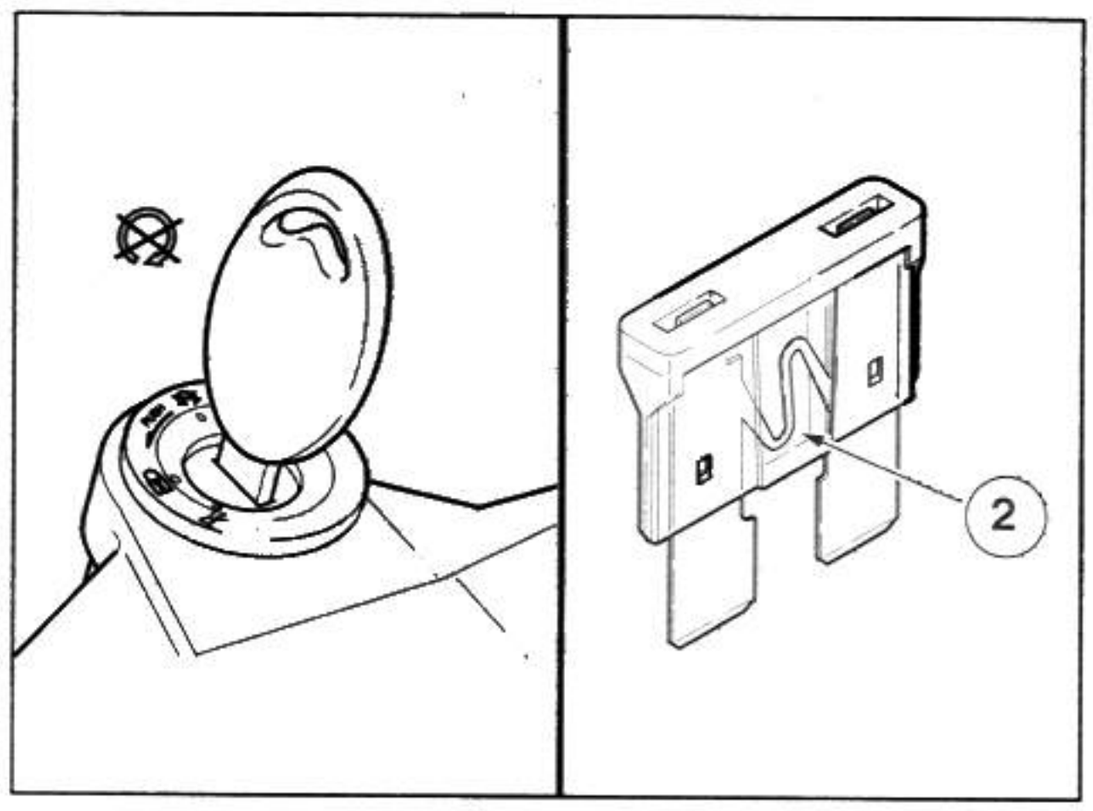

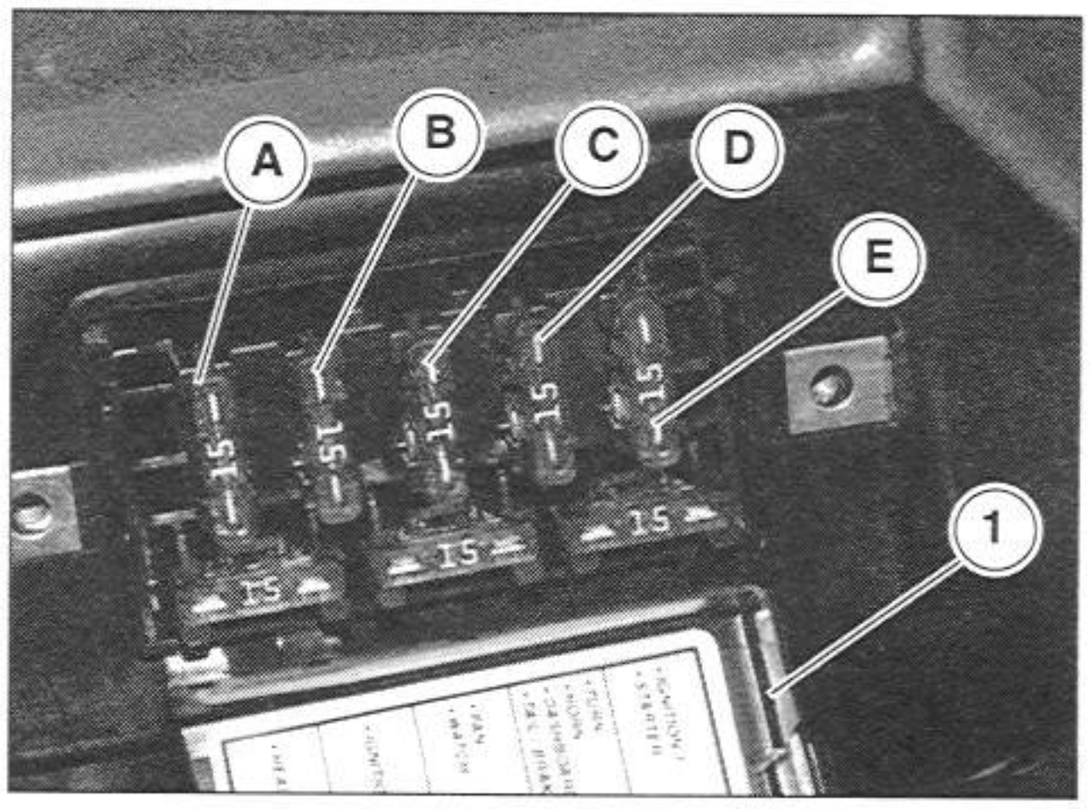

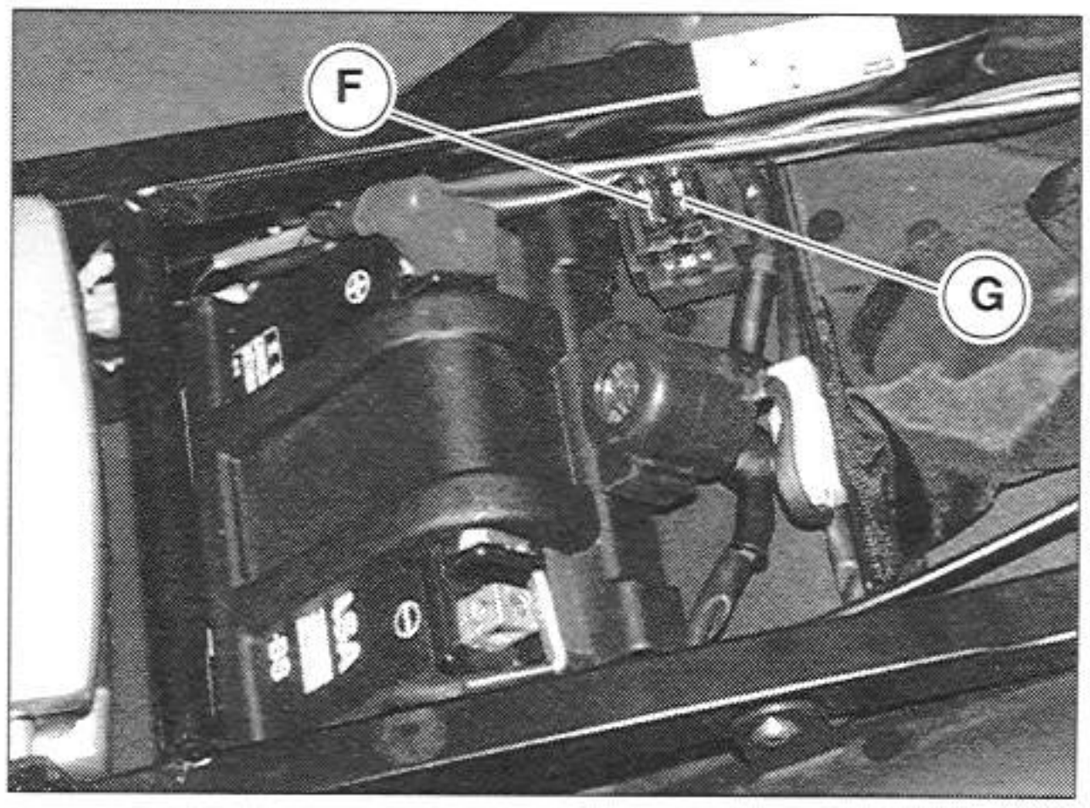

6.17 ADJUSTING THE HEADLIGHT BEAM VERTICALLY

NOTE The procedure described here is in compliance with the Italian standard that establishes the maximum height of the headlight beam. For vehicles used in other countries, you must observe local regulations.

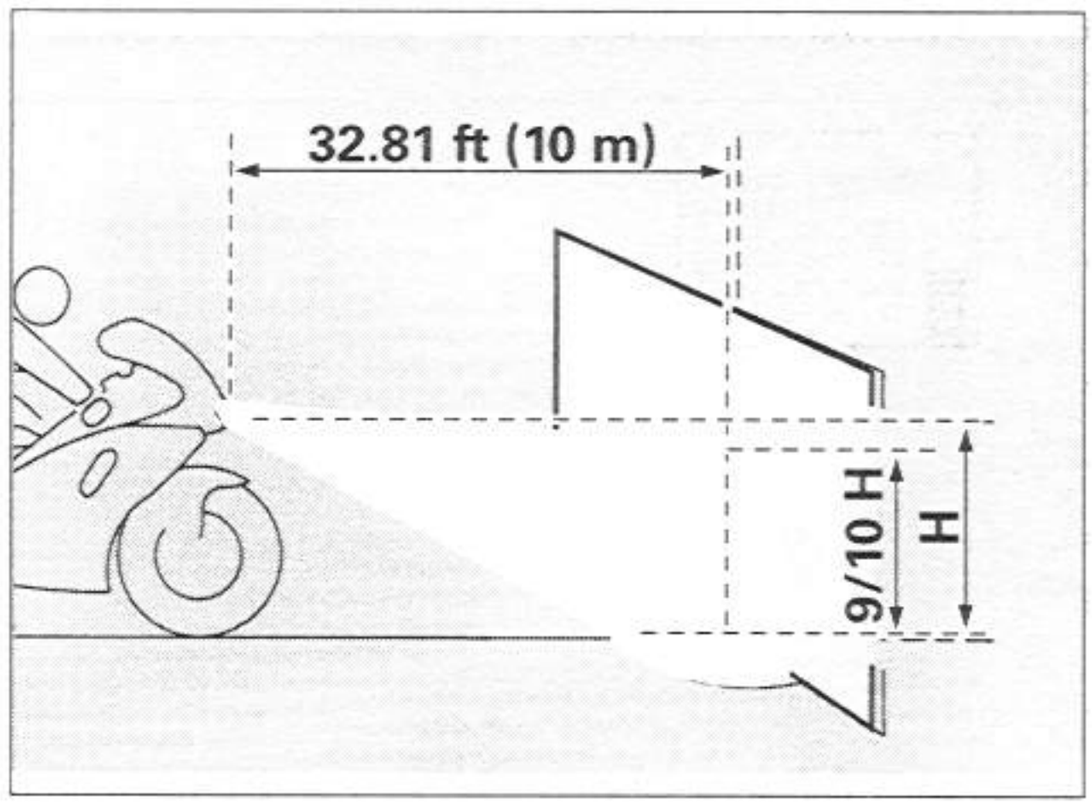

To adjust the headlight beam:

- Remove the right dashboard panel, see 7.1.20 (REMOVING THE FRONT FAIRING).
- Sit on the vehicle as though you were riding.
- Working from the right underside in back of the front fairing, turn the adjuster knob (1):
  - turn clockwise to adjust the beam lower;
  - turn counter-clockwise to adjust the beam higher.

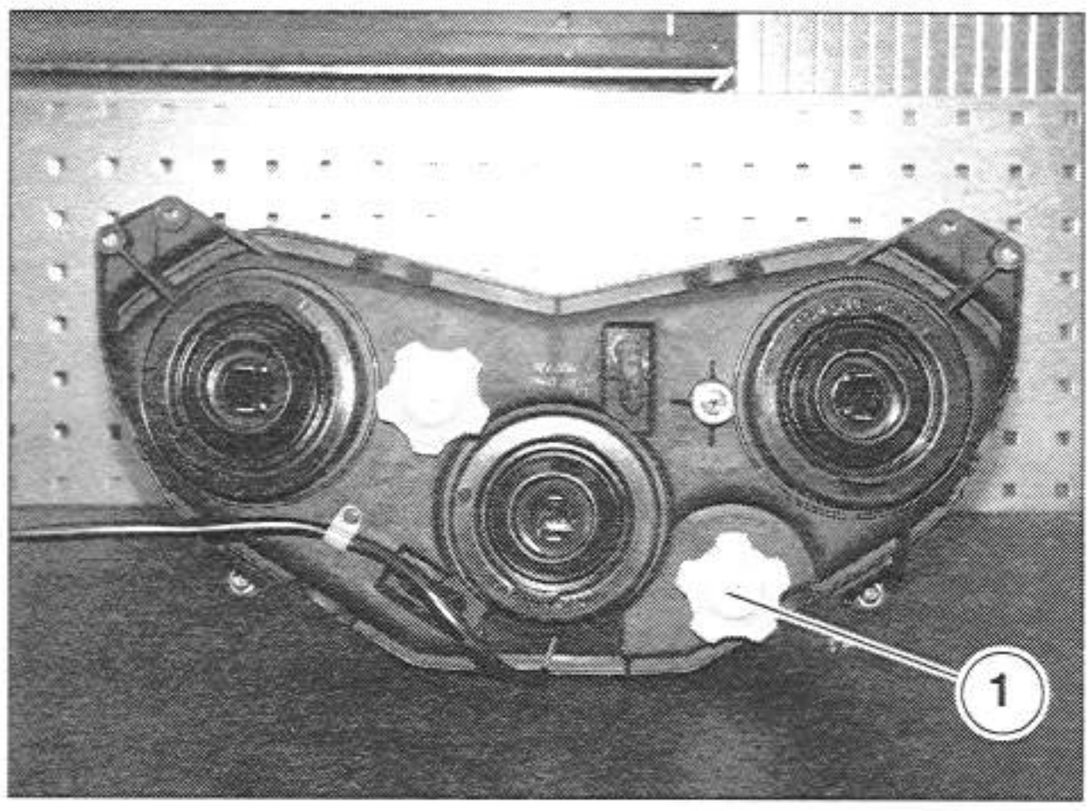

After completing the adjustment:

NOTE Make sure the headlight beam is properly adjusted vertically.

6.18 ADJUSTING THE HEADLIGHT BEAM HORIZONTALLY

NOTE The procedure described here is in compliance with the Italian standard that establishes the maximum height of the headlight beam. For vehicles used in other countries, you must observe local regulations.
Before adjusting the headlight beam horizontally, you must first adjust it vertically, see 6.17 (ADJUSTING THE HEADLIGHT BEAM VERTICALLY).

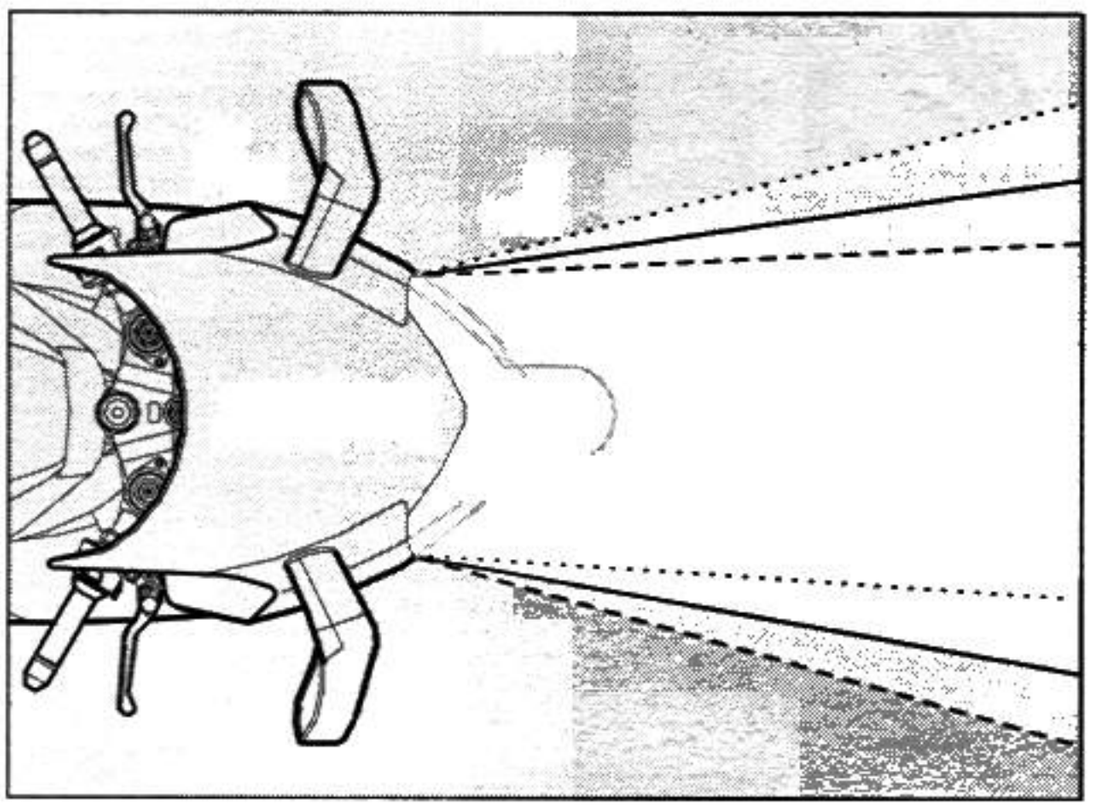

To adjust the headlight beam:

- Remove the left dashboard panel, see 7.1.20 (REMOVING THE FRONT FAIRING).
- Sit on the vehicle as though you were riding.
- Working from the left side of the front fairing, turn the adjuster knob (2):
  - turn clockwise to move the beam to the left;
  - turn counter-clockwise to move the beam to the right.

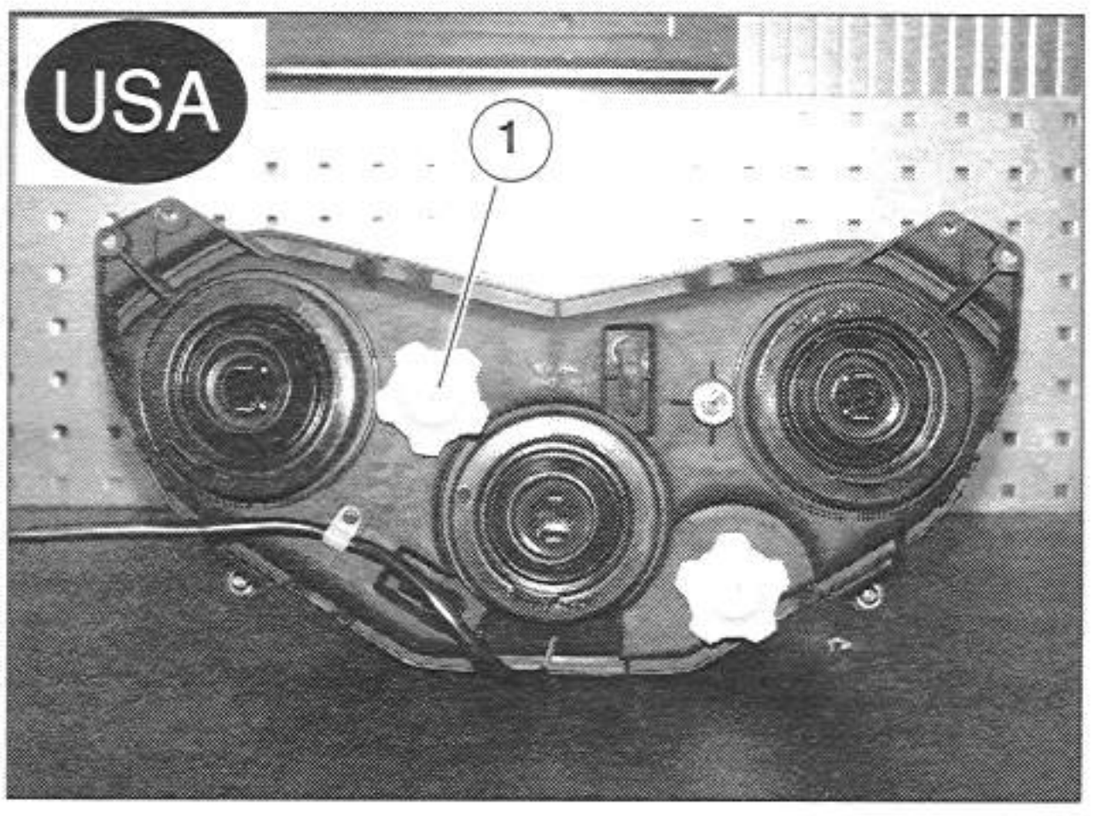

After completing the adjustment:

NOTE Make sure the headlight beam is properly adjusted horizontally.

⚠ DANGER

If the headlight is improperly adjusted, it could temporarily blind oncoming drivers, or fail to illuminate the road in front of you. Either of these conditions could cause you to lose control of the motorcycle, with subsequent upset, and serious accident and injury or even death. Never ride you motorcycle unless the headlight is properly adjusted.

6.19 WIRING DIAGRAM - RST MILLE FUTURA.

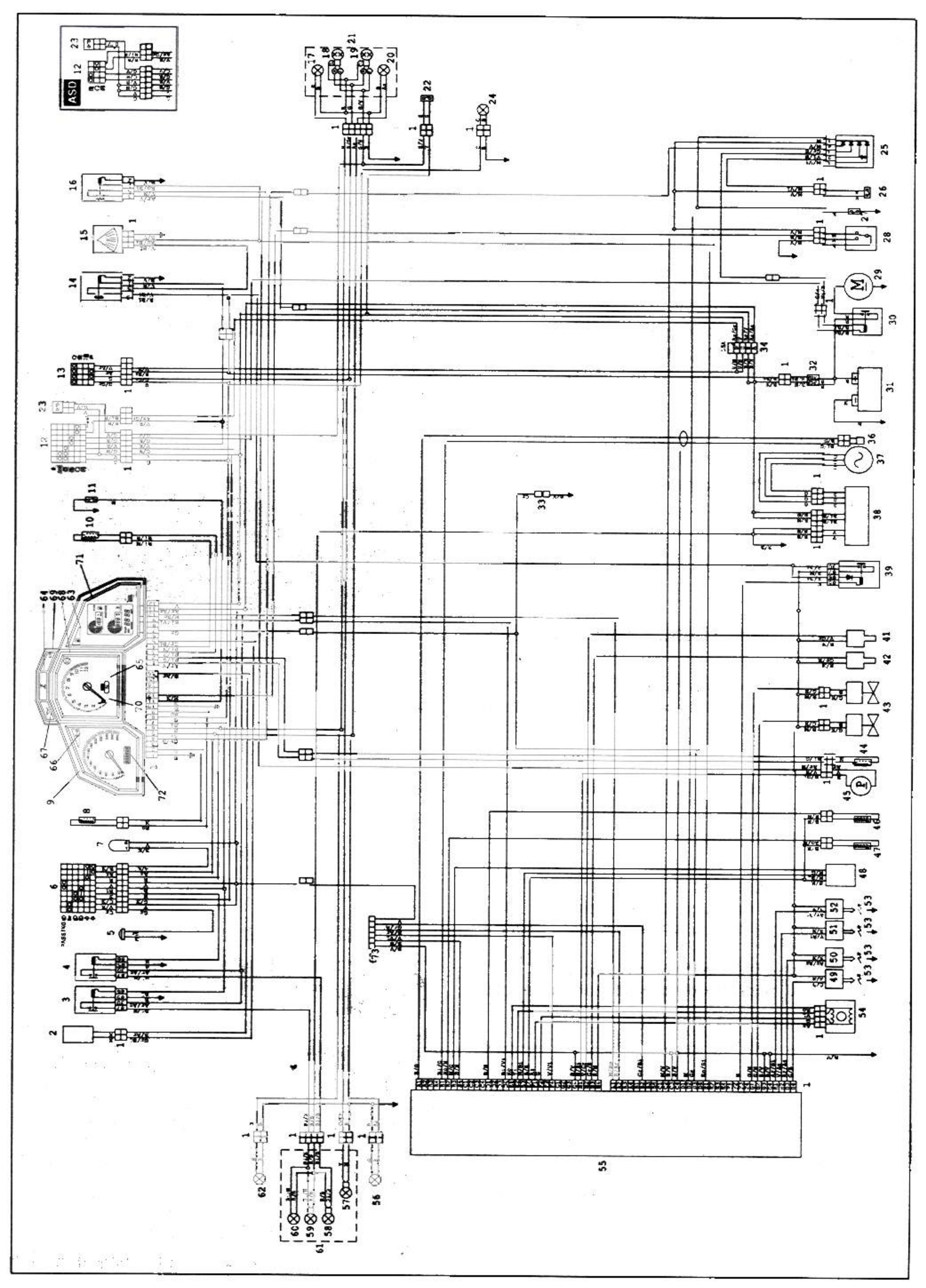

Legend:

1) Multiple connectors
2) Speed sensor
3) High beam relay
4) Low beam relay
5) Horn
6) Left dimmer switch
7) Flasher
8) Air thermistor (dashboard)
9) Dashboard
10) Coolant temperature thermistor (dashboard)
11) Engine oil pressure switch
12) Right dimmer switch
13) Ignition switch
14) Engine stop relay
15) Overturn sensor
16) Fuel pump relay
17) Rear right direction indicator
18) Rear parking/brake light bulb
19) Rear parking/brake light bulb
20) Rear left direction indicator
21) Taillight
22) Rear stop switch
23) Front stop switch
24) License plate light bulb
25) Diode module
26) Clutch lever switch
27) Neutral gear switch
28) Side stand switch
29) Starter motor
30) Start relay
31) Battery
32) Main fuses (30 A) (Ignition)
33) TEST connectors
34) Secondary fuses (15A)
    A - headlight, dashboard
    B - fuel pump
    C - parking lights, rear brake lights, horn, direction indicators
    D - starting, safety logic
    E -available
35) –
36) Pick up
37) Alternator
38) Voltage regulator
39) Injection relay
40) –
41) Rear cylinder injector
42) Front cylinder injector
43) Cooling fans
44) Fuel reserve sensor
45) Fuel pump
46) Air thermistor (electronic control unit)
47) Coolant temperature thermistor (electronic control unit)
48) Throttle valve position sensor
49) Rear cylinder coil
50) Rear cylinder coil
51) Front cylinder coil
52) Front cylinder coil
53) Spark plugs
54) Choke
55) Electronic control unit
56) Front left direction indicator
57) Front parking light bulb
58) Low beam bulb
59) High beam bulbs
60) High beam bulb
61) Headlight
62) Front right direction indicator
63) Fuel reserve LED
64) Side stand down LED
65) Gear in neutral LED
66) Direction indicators LED
67) Engine oil pressure LED
68) High beam LED
69) Diagnostics LED
70) Tachometer
71) Multifunction display (right side)
72) Multifunction display (left side)
73) Diagnostics connection.

NOTES

CHASSIS

7

CHASSIS

TABLE OF CONTENTS

7.1 BODY 7-4-00
7.1.1 REMOVING THE SADDLE 7-6-00
7.1.2 REMOVING THE REAR SIDE PANELS 7-6-00
7.1.3 REMOVING THE FRONT SIDE PANELS 7-7-00
7.1.4 REMOVING THE BAG RACKS 7-7-00
7.1.5 PARTIALLY REMOVING THE FUEL TANK 7-8-00
7.1.6 REMOVING THE FUEL TANK COMPLETELY 7-9-00
7.1.7 REMOVING THE FUEL TANK CAP 7-10-00
7.1.8 REMOVING THE AIR FILTER CASE .. 7-11-00
7.1.9 REMOVING THE BATTERY 7-12-00
7.1.10 REMOVING THE ELECTRONIC CONTROL UNIT 7-13-00
7.1.11 REMOVING THE HANDGRIP FROM THE LEFT HANDLEBAR 7-13-00
7.1.12 REMOVING THE CLUTCH CONTROL 7-15-00
7.1.13 REMOVING ELECTRICAL CONTROLS ON THE LEFT HANDLEBAR 7-16-00
7.1.14 REMOVING THE THROTTLE CONTROL 7-16-00
7.1.15 REMOVING THE FRONT BRAKE CONTROL 7-17-00
7.1.16 REMOVING ELECTRICAL CONTROLS ON THE RIGHT HANDLEBAR 7-18-00
7.1.17 REMOVING THE IGNITION SWITCH/ STEERING LOCK 7-19-00
7.1.18 REMOVING THE LEFT HANDLEBAR 7-20-00
7.1.19 REMOVING THE RIGHT HANDLEBAR 7-20-00
7.1.20 REMOVING THE FRONT FAIRING 7-21-00
7.1.21 REMOVING THE MIRRORS 7-22-00
7.1.22 REMOVING THE HEADLIGHT 7-22-00
7.1.23 REMOVING THE UPPER DASHBOARD MOLDING 7-23-00
7.1.24 REMOVING THE DASHBOARD 7-23-00
7.1.25 REMOVING THE DASHBOARD/FRONT FAIRING MOUNT 7-24-00
7.1.26 REMOVING THE FRONT MUDGUARD 7-25-00
7.1.27 REMOVING THE HORN 7-25-00
7.1.28 REMOVING THE SIDE FAIRINGS 7-26-00
7.1.29 REMOVING THE FRONT DIRECTION INDICATORS 7-26-00
7.1.30 REMOVING THE LEFT AIR DUCT 7-27-00
7.1.31 REMOVING THE RIGHT AIR DUCT ... 7-28-00
7.1.32 REMOVING THE FRONT FAIRING LOWER LOCKUP 7-28-00
7.1.33 REMOVING THE LOWER FAIRING ... 7-29-00
7.1.34 REMOVING THE AIR INLET DUCT CASES 7-30-00
7.1.35 REMOVING THE RADIATOR SPOILER 7-30-00
7.1.36 REMOVING THE TAILLIGHT 7-31-00
7.1.37 REMOVING THE REAR GRAB HANDLE 7-32-00
7.1.38 REMOVING THE SADDLE LOCK 7-32-00
7.1.39 COMPLETELY REMOVING THE SADDLE RELEASE 7-33-00
7.1.40 REMOVING THE LOWER SADDLE PANEL 7-33-00
7.1.41 REMOVING THE SADDLE SUPPORT LOWER MOLDED COVER 7-34-00
7.1.42 REMOVING THE LICENSE PLATE HOLDER 7-36-00
7.1.43 REMOVING THE PASSENGER FOOTREST SUPPORTS 7-36-00
7.1.44 REMOVING THE PASSENGER FOOTREST 7-37-00
7.1.45 REMOVING THE LEFT RIDER FOOTREST SUPPORT 7-37-00
7.1.46 REMOVING THE RIGHT RIDER FOOTREST SUPPORT 7-38-00
7.1.47 REMOVING THE RIDER FOOTREST. 7-38-00
7.1.48 COMPLETELY REMOVING THE GEARSHIFT LEVER 7-39-00
7.1.49 REMOVING THE REAR BRAKE LEVER 7-40-00
7.1.50 REMOVING THE EXHAUST SILENCER 7-41-00
7.1.51 REMOVING THE EXHAUST PIPES 7-42-00
7.1.52 REMOVING THE EXPANSION TANK 7-42-00
7.1.53 REMOVING THE EXHAUST MANIFOLDS 7-43-00
7.1.54 REMOVING THE SIDE STAND 7-44-00
7.1.55 REMOVING THE ENGINE OIL TANK. 7-45-00
7.1.56 REMOVING THE ENGINE OIL RADIATOR 7-46-00
7.1.57 REMOVING THE DRIVE CHAIN SHOE 7-47-00
7.1.58 REMOVING THE UPPER CHAIN HOUSING 7-48-00
7.1.59 REMOVING THE REAR HOUSING 7-48-00
7.1.60 REMOVING THE FRAME 7-49-00

7.2 FRONT WHEEL 7-51-00
7.2.1 REMOVING THE COMPLETE WHEEL 7-52-00
7.2.2 DISMANTLING THE WHEEL 7-53-00
7.2.3 CHECKING THE COMPONENTS 7-54-00
7.2.4 REINSTALLING THE WHEEL 7-55-00

7.3 REAR WHEEL 7-56-00
7.3.1 REMOVING THE COMPLETE WHEEL 7-57-00
7.3.2 REASSEMBLING THE REAR WHEEL. 7-58-00

7.4 FINAL DRIVE ASSEMBLY 7-60-00
7.4.1 REMOVING THE FINAL DRIVE ASSEMBLY 7-61-00
7.4.2 CHECKING THE COMPONENTS 7-63-00
7.4.3 REMOVING THE ECCENTRIC CAM .. 7-64-00
7.4.4 REMOVING THE SPROCKET 7-64-00

7.5 FRONT BRAKES 7-65-00
7.5.1 CHANGING THE BRAKE PADS 7-66-00
7.5.2 CHECKING THE BRAKE DISCS 7-67-00
7.5.3 REMOVING THE BRAKE DISCS 7-67-00
7.5.4 REMOVING THE BRAKE MASTER CYLINDER 7-67-00

7.6 REAR BRAKE 7-68-00
7.6.1 CHANGING THE BRAKE PADS 7-69-00
7.6.2 REMOVING THE REAR BRAKE CALIPER 7-70-00
7.6.3 CHECKING THE BRAKE DISC 7-71-00
7.6.4 REMOVING THE BRAKE DISC 7-72-00
7.6.5 REMOVING THE BRAKE MASTER CYLINDER 7-73-00

7.7 STEERING 7-74-00
7.7.1 DISASSEMBLING THE STEERING 7-75-00
7.7.2 CHECKING THE COMPONENTS 7-75-00

7.7.3 REASSEMBLING THE STEERING 7-76-*00*

7.8 FRONT FORK 7-77-*00*

7.8.1 CHANGING THE FORK OIL 7-78-*00*
7.8.2 REMOVING THE FORK TUBES 7-78-*00*
7.8.3 DISASSEMBLING THE LOWER FORK TUBE/UPPER FORK TUBE UNIT 7-79-*00*
7.8.4 CHECKING THE COMPONENTS 7-84-*00*
7.8.5 REASSEMBLING THE UPPER/LOWER FORK TUBE UNIT 7-85-*00*
7.8.6 INSTALLING THE LOWER FORK TUBE/UPPER FORK TUBE UNIT 7-90-*00*

7.9 SWINGING ARM 7-91-*00*

7.9.1 REMOVING THE SWINGING ARM 7-91-*00*
7.9.2 DISASSEMBLING THE SWINGING ARM 7-92-*00*
7.9.3 CHECKING THE COMPONENTS 7-93-*00*
7.9.4 RE-INSTALLING THE SWINGING ARM 7-94-*00*

7.10 REAR SUSPENSION 7-96-*00*

7.10.1 REMOVING THE SHOCK ABSORBER. 7-96-*00*
7.10.2 DISASSEMBLING THE REAR SUSPENSION LINKAGE 7-97-*00*
7.10.3 DISASSEMBLING THE SUSPENSION LINKAGE 7-98-*00*
7.10.4 CHECKING THE COMPONENTS 7-99-*00*

7.11 DISASSEMBLING THE DRIVE CHAIN 7-100-*00*

7.11.1 CHAIN BREAKER/RIVET TOOL 7-100-*00*
7.11.2 BREAKING THE CHAIN 7-101-*00*
7.11.3 PLACING THE MASTER LINK 7-102-*00*
7.11.4 RIVETING THE PINS 7-103-*00*

7.1 BODY

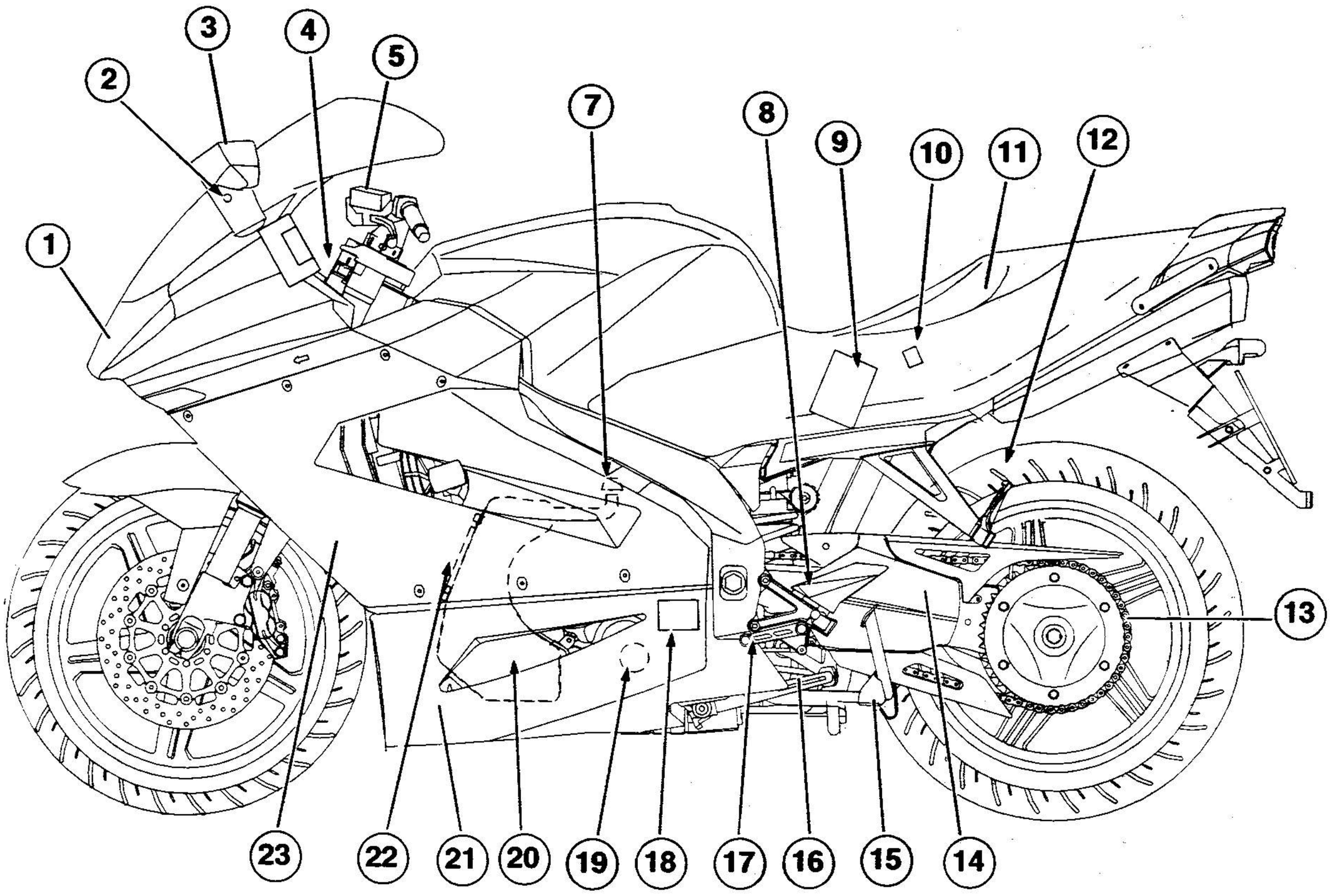

Legend:

1) Headlight
2) Air temperature sensor
3) Left rearview mirror
4) Saddle lock
5) Ignition switch / steering lock / parking lights
6) Clutch fluid reservoir
7) Engine oil reservoir cap
8) Left rider footrest
9) Battery
10) Main fuse holder (30A)
11) Saddle
12) Left passenger footrest (locking, closed /open)
13) Drive chain
14) Swinging arm
15) Center stand
16) Side stand
17) Gearshift lever
18) Electronic control unit
19) Engine oil filter
20) Engine oil reservoir
21) Lower left fairing
22) Engine oil level
23) Left fairing

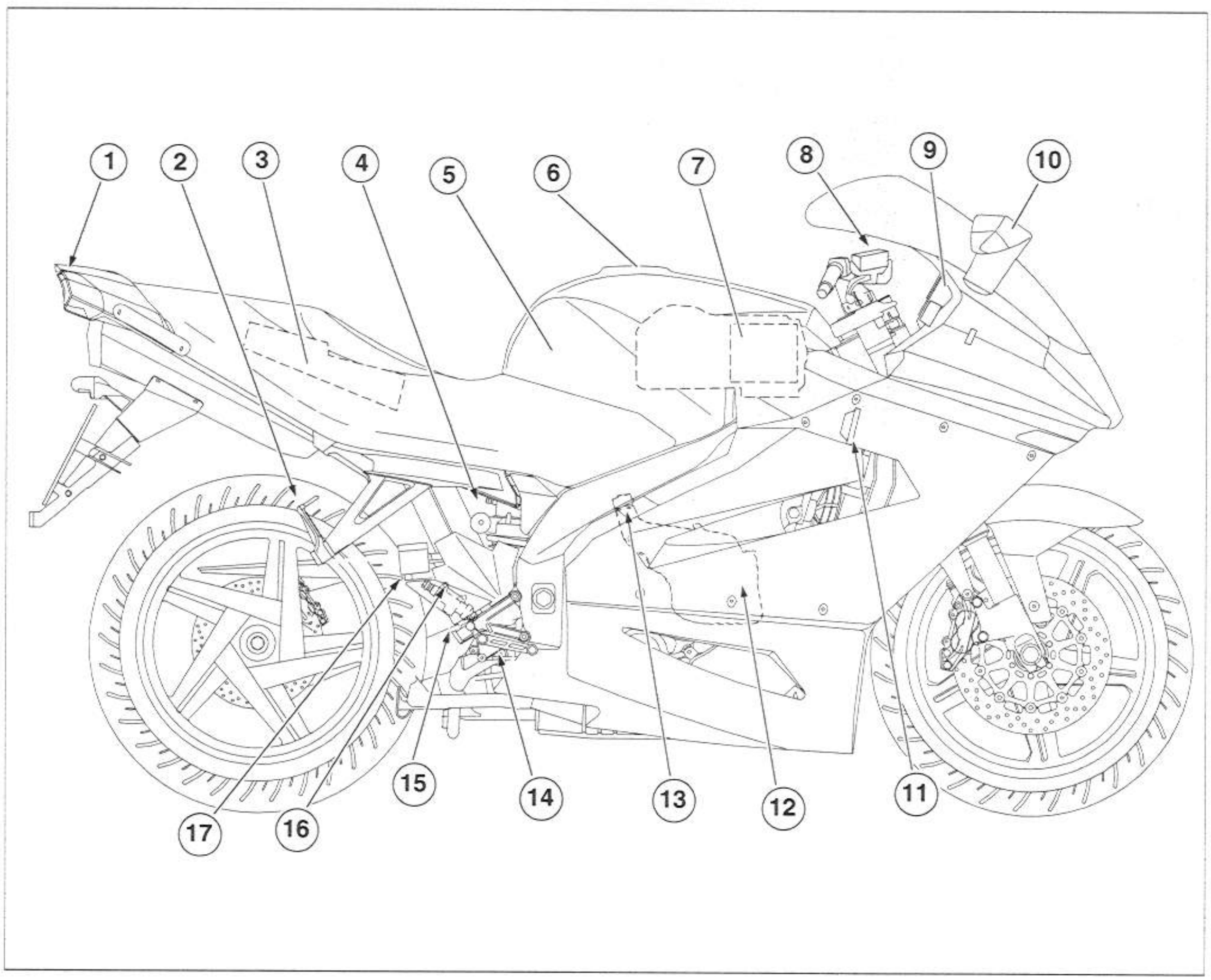

Legend:

1) Taillight
2) Right passenger footrest (locking, closed /open)
3) Glove/tool kit compartment
4) Rear shock absorber
5) Fuel tank
6) Fuel tank cap
7) Air filter
8) Front brake fluid reservoir
9) Secondary fuse holder (15A)
10) Right rearview mirror
11) Horn
12) Coolant expansion tank
13) Coolant expansion tank plug
14) Rear brake lever
15) Right rider footrest
16) Rear brake master cylinder
17) Rear brake fluid reservoir

7.1.1 REMOVING THE SADDLE

- Place the vehicle on the center stand.
- Insert the key (2) in the lock (3) to the left of the dashboard.
- Turn the key (2) counter-clockwise, raise and pull the saddle (1) out from the back, complete with side panels.

NOTE Before lowering and locking the saddle (1), make sure you have not accidentally left the key (2) in the glove/tool kit compartment. When reassembling the saddle (1), make sure that the lock clicks into place.

If necessary:

- Remove the front side panels, see 7.1.3 (REMOVING THE FRONT SIDE PANELS).

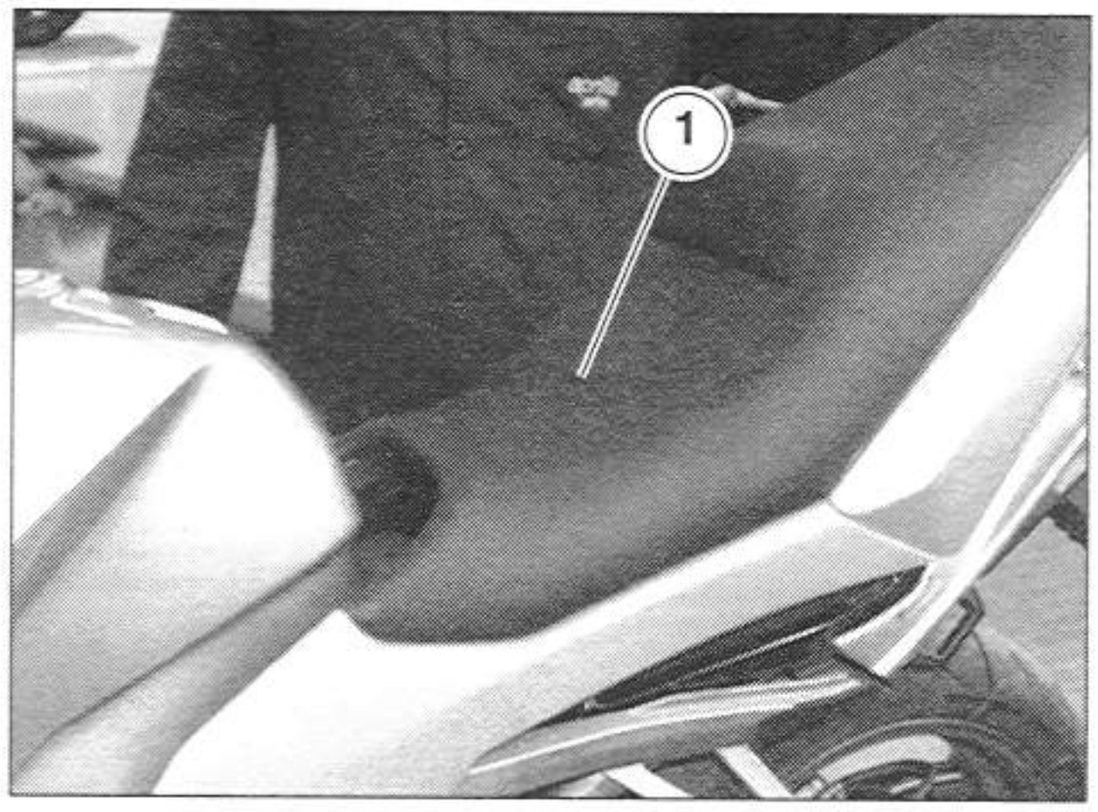

7.1.2 REMOVING THE REAR SIDE PANELS

NOTE The following steps refer to removing a single side panel, but are applicable to both.

- Remove the saddle, see 7.1.1 (REMOVING THE SADDLE).
- Place the saddle on a flat surface.
- Unscrew and remove the four screws (1).

Tightening torque for screws (1): 0.7 ftlb (1 Nm).

- Remove the rear side panel (2).

NOTE If necessary, repeat the above steps to remove the other rear side panel.

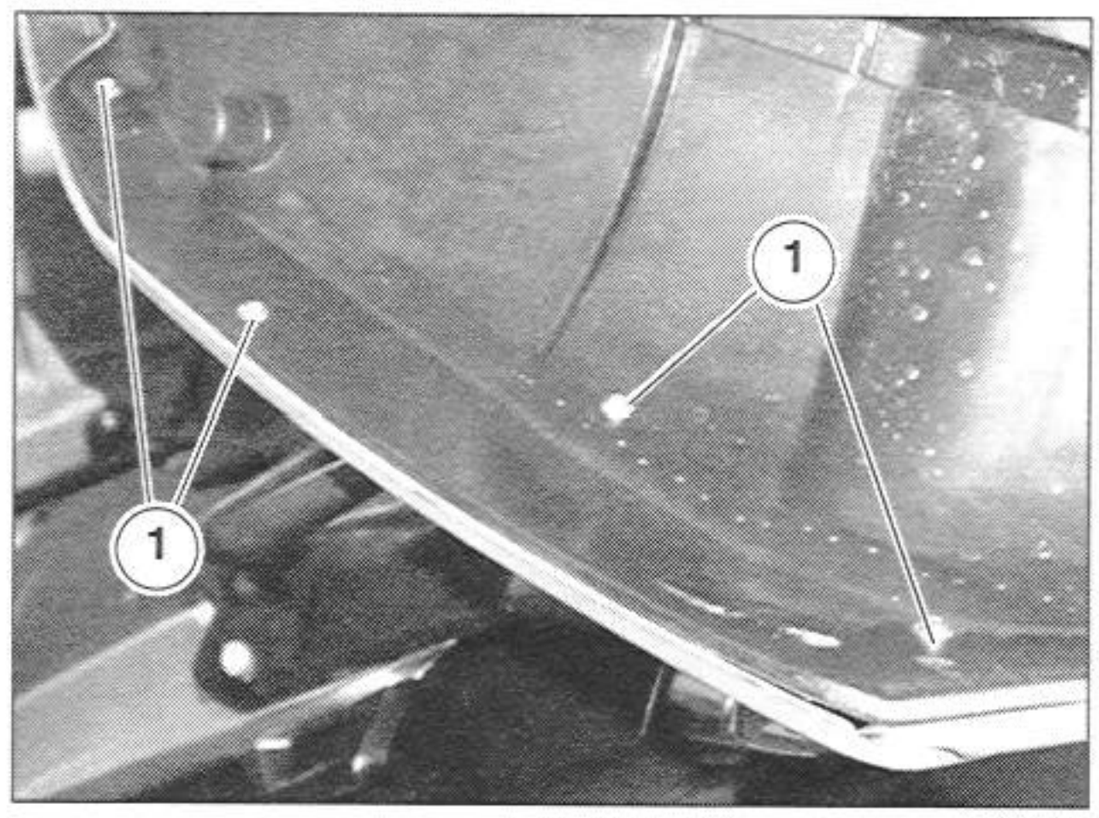

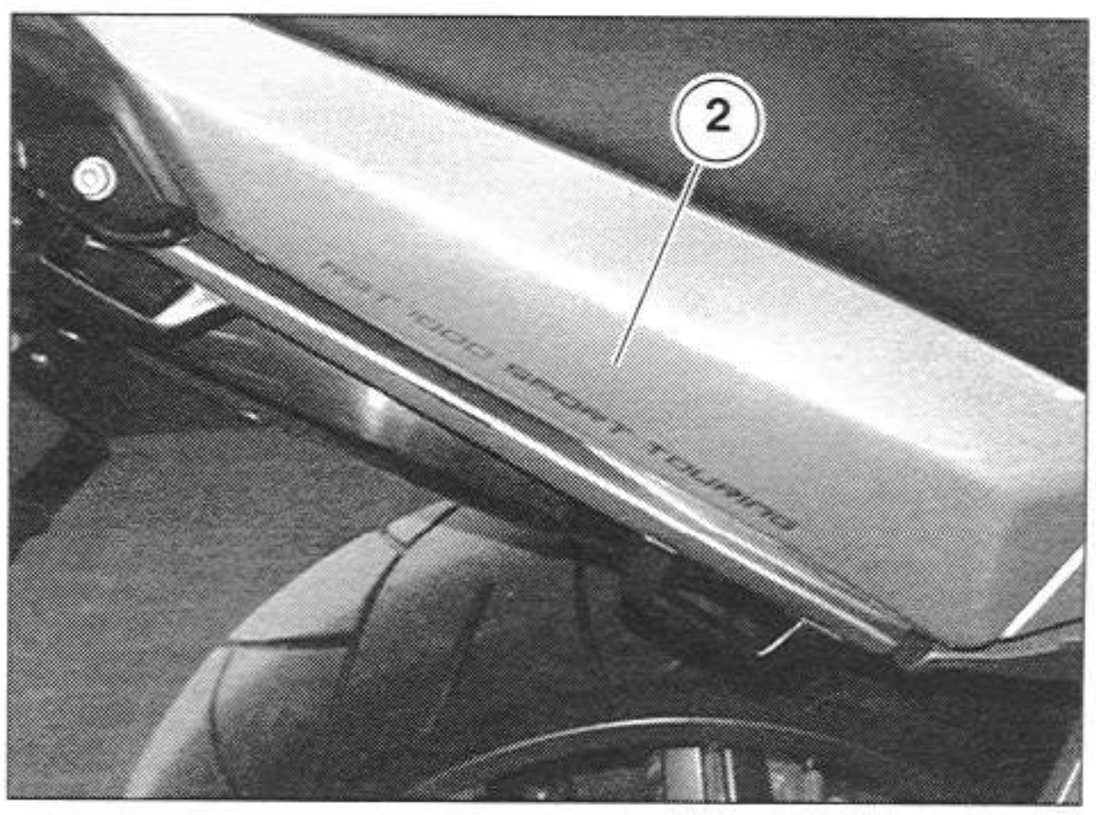

7.1.3 REMOVING THE FRONT SIDE PANELS

NOTE The following steps refer to removing a single side panel, but are applicable to both.

- Remove both rear side panels, see 7.1.2 (REMOVING THE REAR SIDE PANELS).
- Unscrew and remove the five screws (1).

Tightening torque for screws (1): 0.7 ftlb (1 Nm).

NOTE When reassembling, replace the three adhesive plates (2).

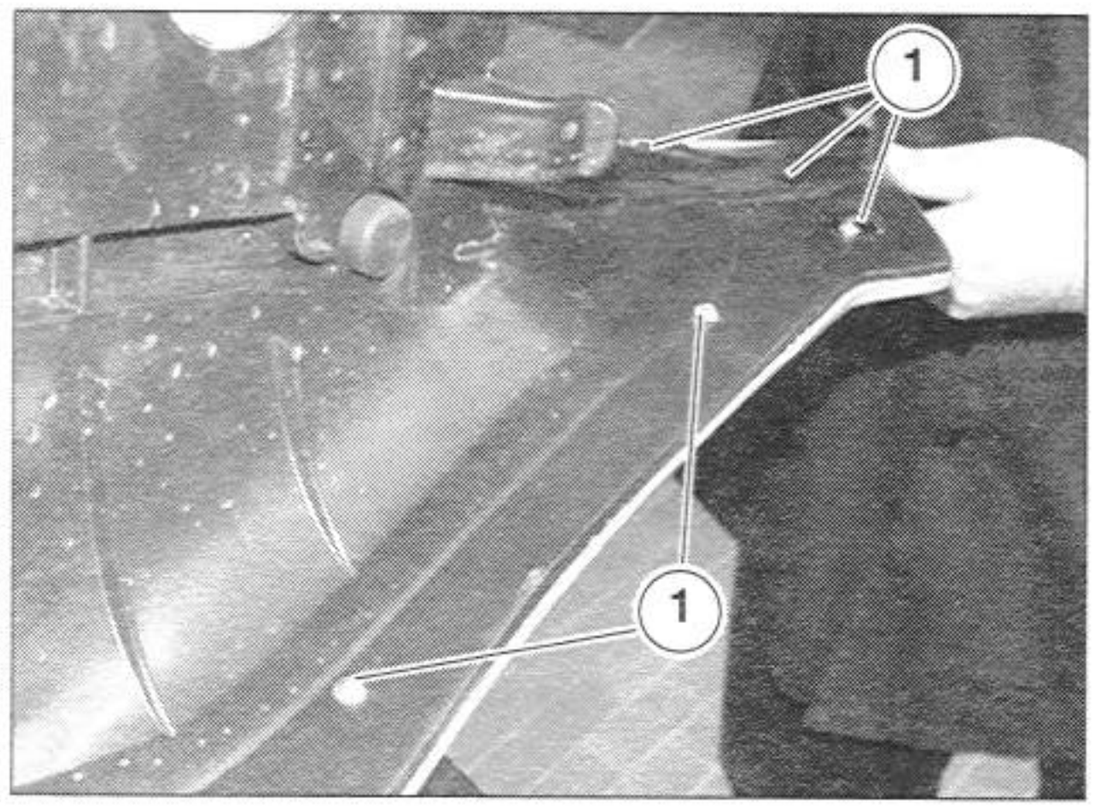

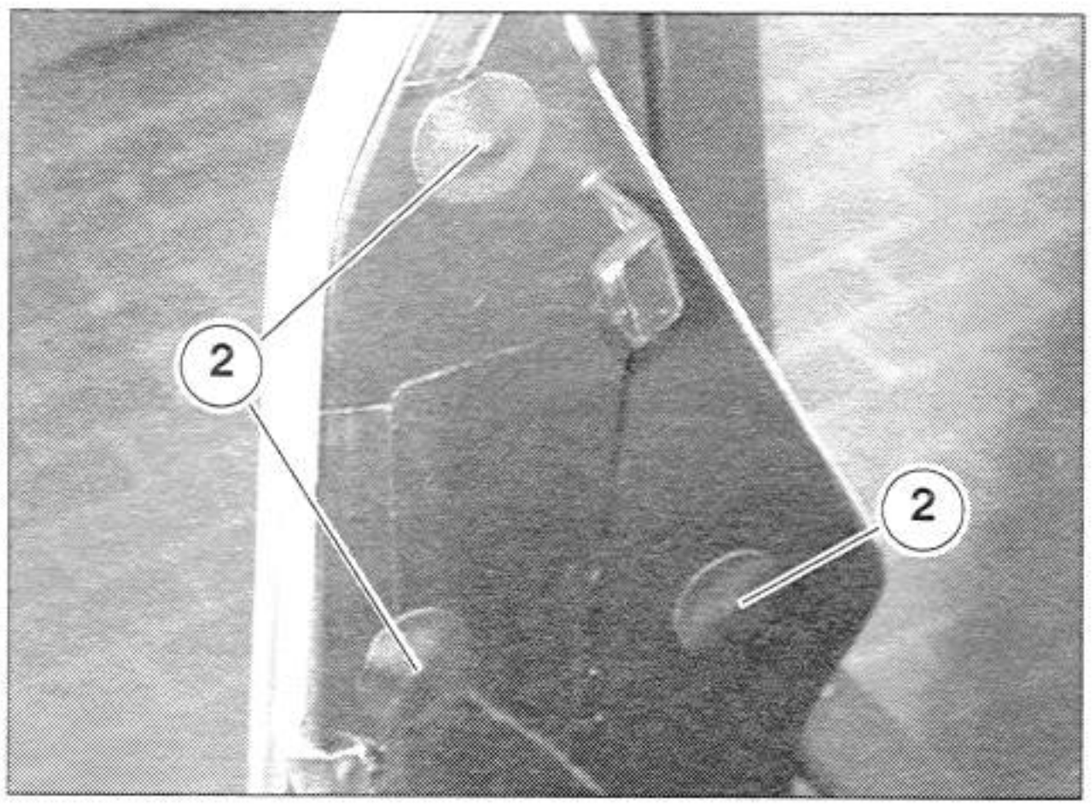

7.1.4 REMOVING THE BAG RACKS

NOTE The following steps refer to removing a single rack, but are applicable to both.

- Remove the saddle, see 7.1.1 (REMOVING THE SADDLE).
- Unscrew and remove the screw (1) retrieving the washer and bushing from inside.

Tightening torque for screws (1): 0.7 ftlb (1 Nm).

- Unscrew and remove the screw (2), retrieving the bushing.

Tightening torque for screw (2): 7.3 ftlb (10 Nm).

- Unscrew and remove the two screws (3), retrieving the washers.
- Remove the bag rack (4).

NOTE When reassembling, the longer bushing (5) must be placed at the bottom of the screw (2).

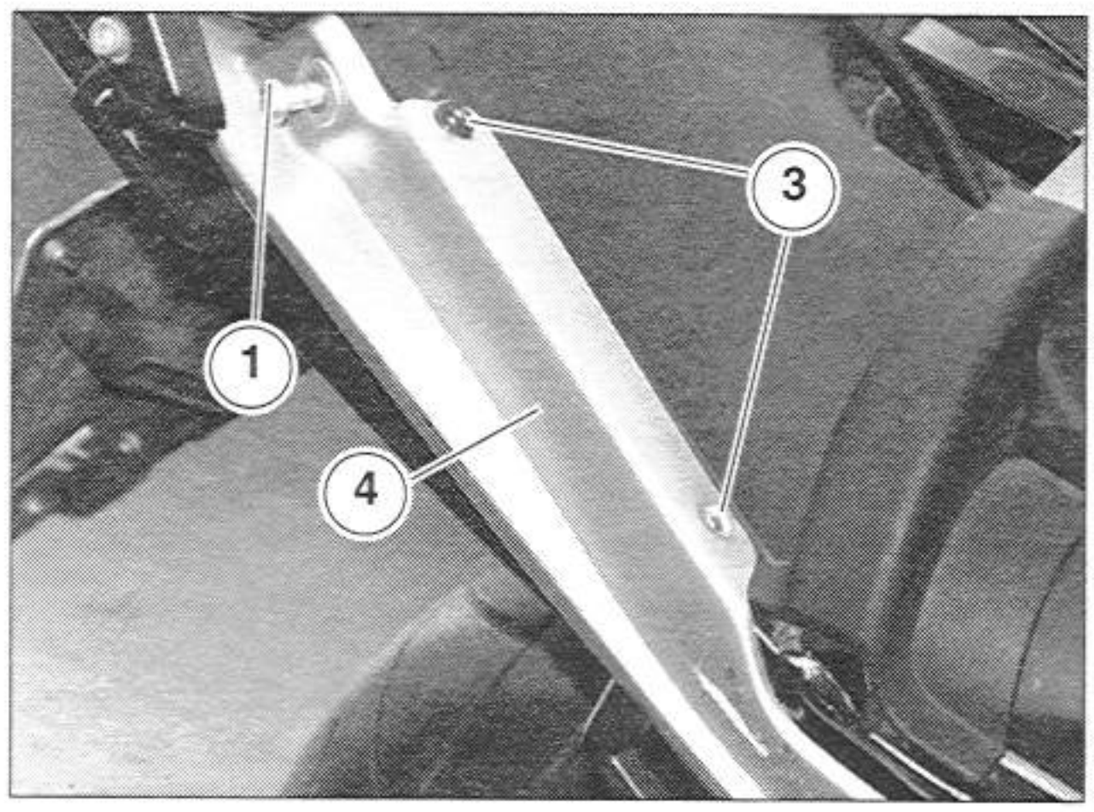

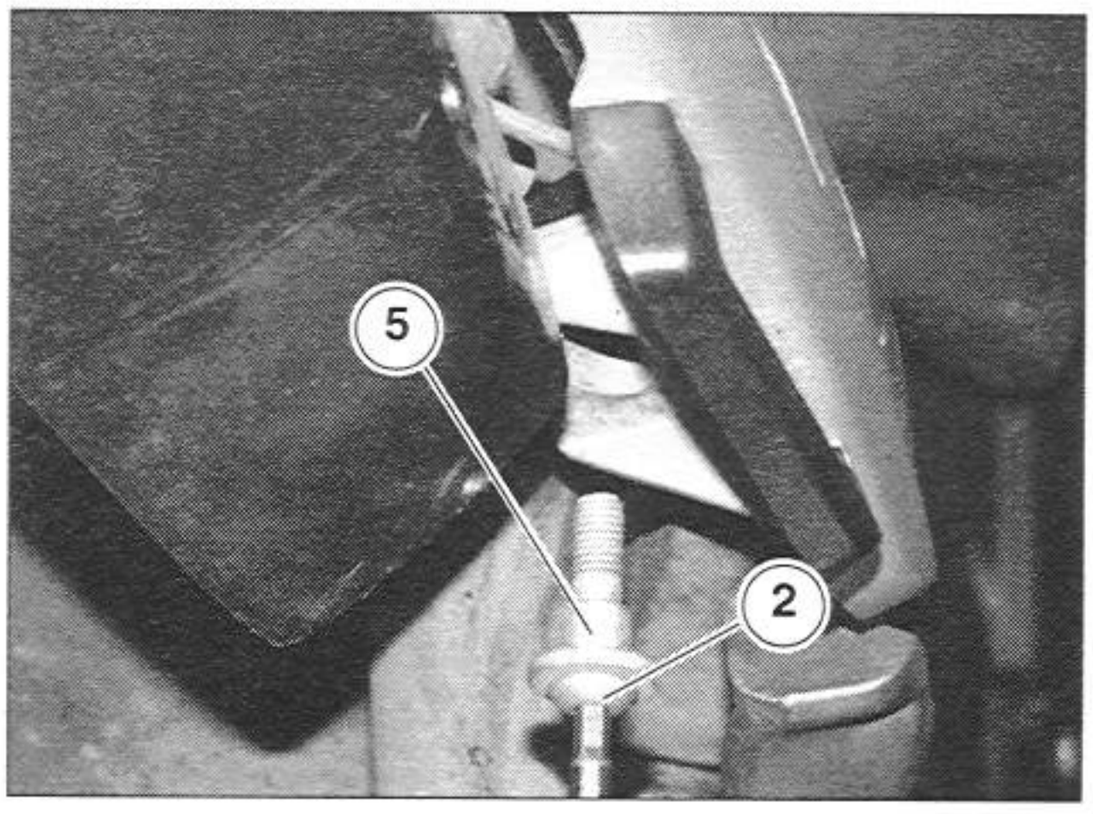

7.1.5 PARTIALLY REMOVING THE FUEL TANK

Carefully read 1.3.9 (PRECAUTIONS AND GENERAL INFORMATION), 1.4.1 (FUEL) and 4.1 (FUEL TANK).

⚠ DANGER

Gasoline is extremely flammable and becomes explosive under certain conditions.

KEEP GASOLINE AWAY FROM CHILDREN.

NOTE Is possible to partially remove the tank from the vehicle even when it contains fuel.

- Set the ignition switch to "⊗".
- Remove the saddle, see 7.1.1 (REMOVING THE SADDLE).
- Disconnect the connector electrical (1) from the fuel intake pump.

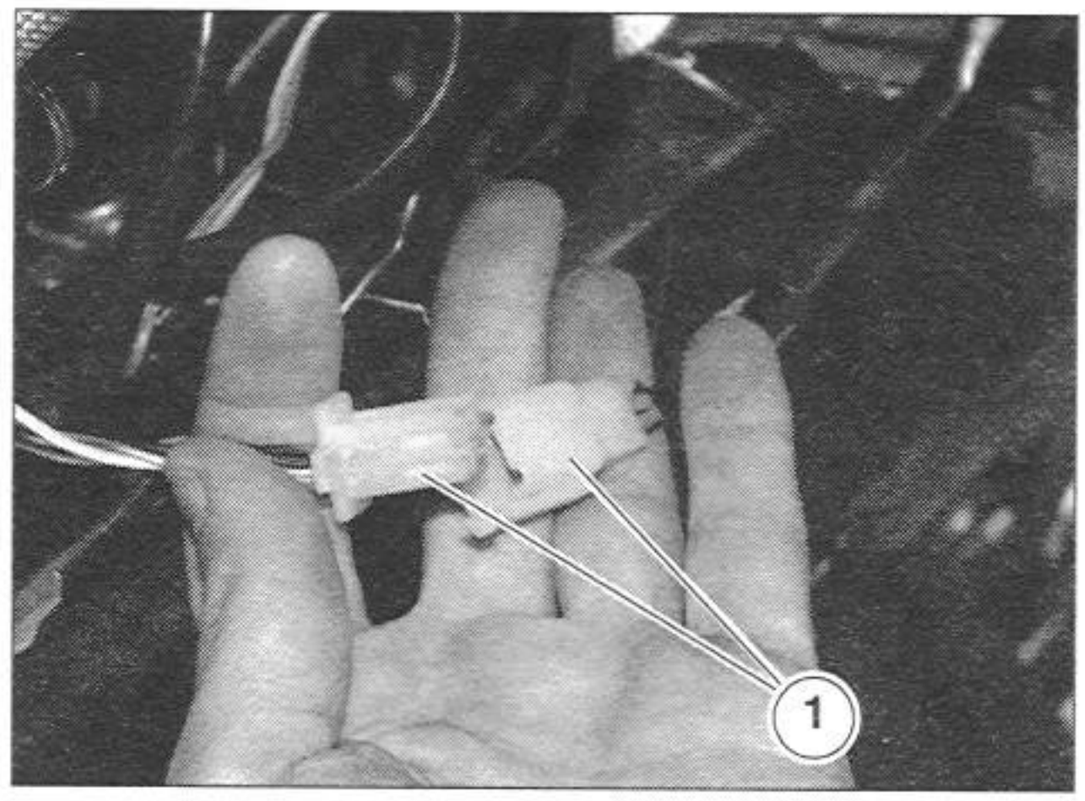

NOTE When reassembling, make sure the electrical connector (1) is fitted properly.

- Slide the two drain tubes (2) upwards.
- Unscrew and remove the two screws (9).

Tightening torque for screws (9): 2.2 ftlb (3 Nm).

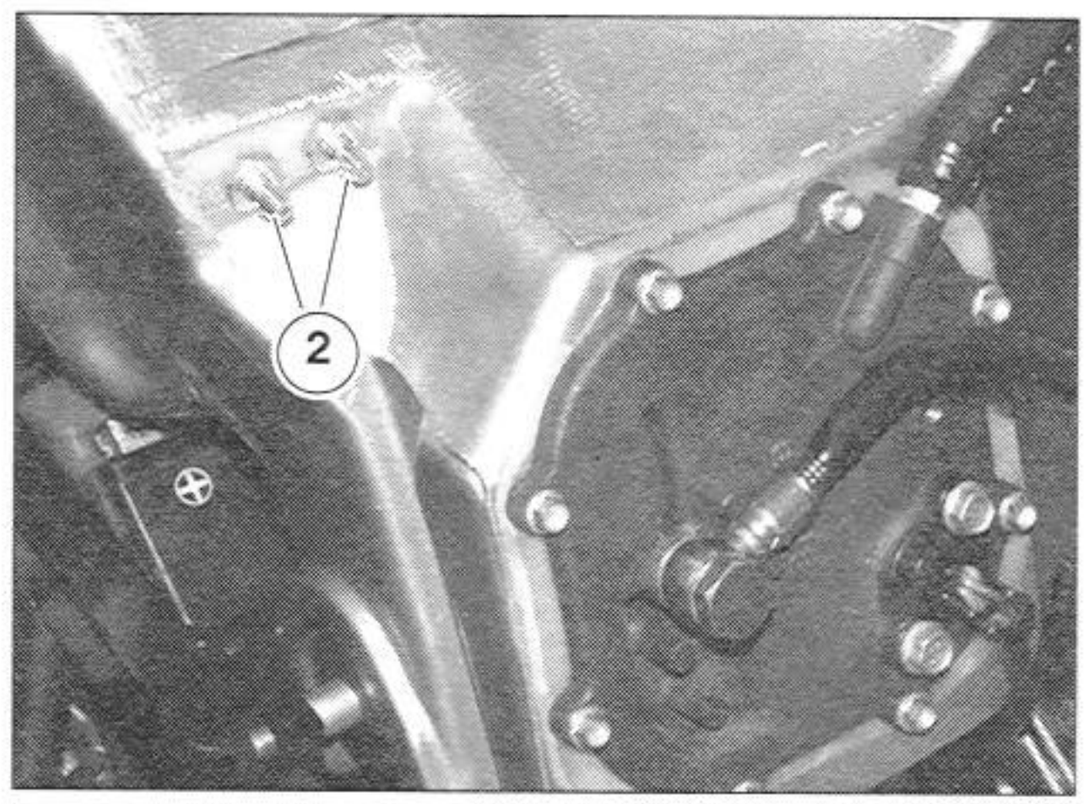

- Remove the grille (3).
- Unscrew and remove the two screws (4) holding the front of the tank (5), retrieve the two bushings, and replace the two grommets if they are damaged.

Tightening torque for screws (4): 5.9 ftlb (8 Nm).

NOTE Place a cloth under the male quick-release coupling (6) to catch any spilled fuel.

- Press the push-button (8) to disconnect the male quick-release coupling (6) from the female (7).

NOTE When reassembling make sure that the male quick-release coupling is properly inserted in the female (7).

- Nearby, on the left side of the vehicle, prepare a flat surface approximately (60 cm) above the ground, and large enough to hold the tank (5).

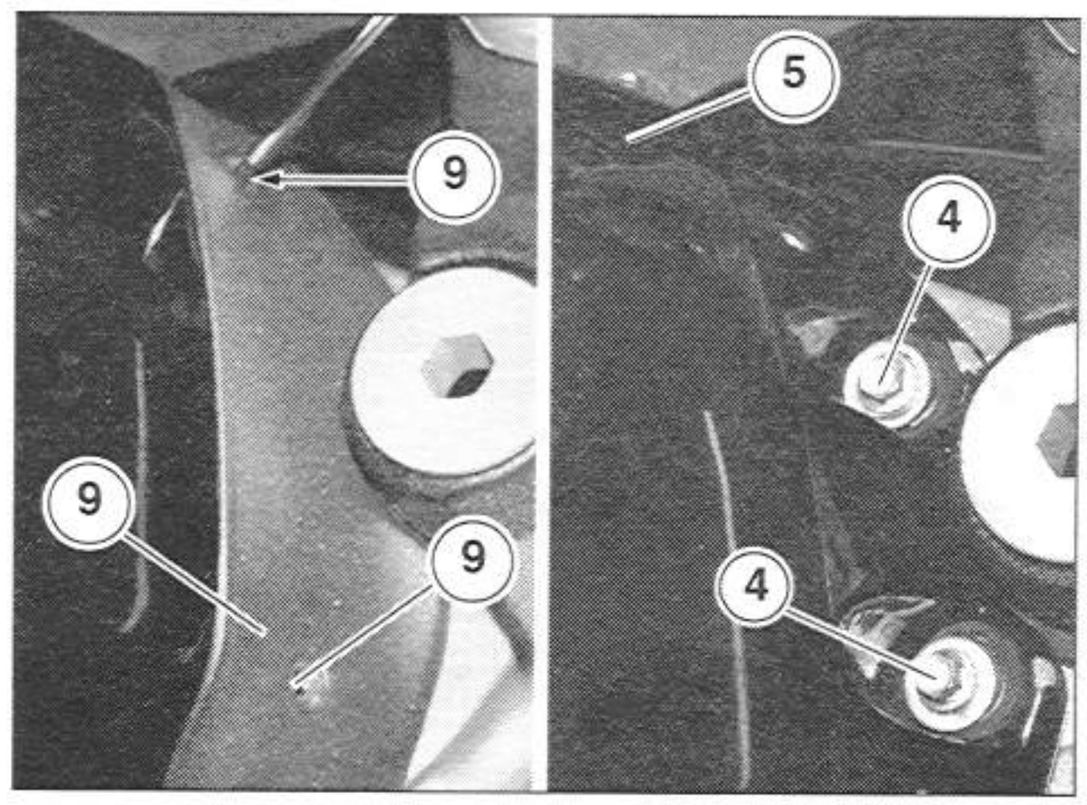

⚠ WARNING

The tank (5) is not completely free, but remains attached to the fuel lines, which should not be disconnected unless absolutely necessary, see 7.1.6 (REMOVING THE FUEL TANK COMPLETELY).
Handle all painted components with care to avoid scraping or scratching them.

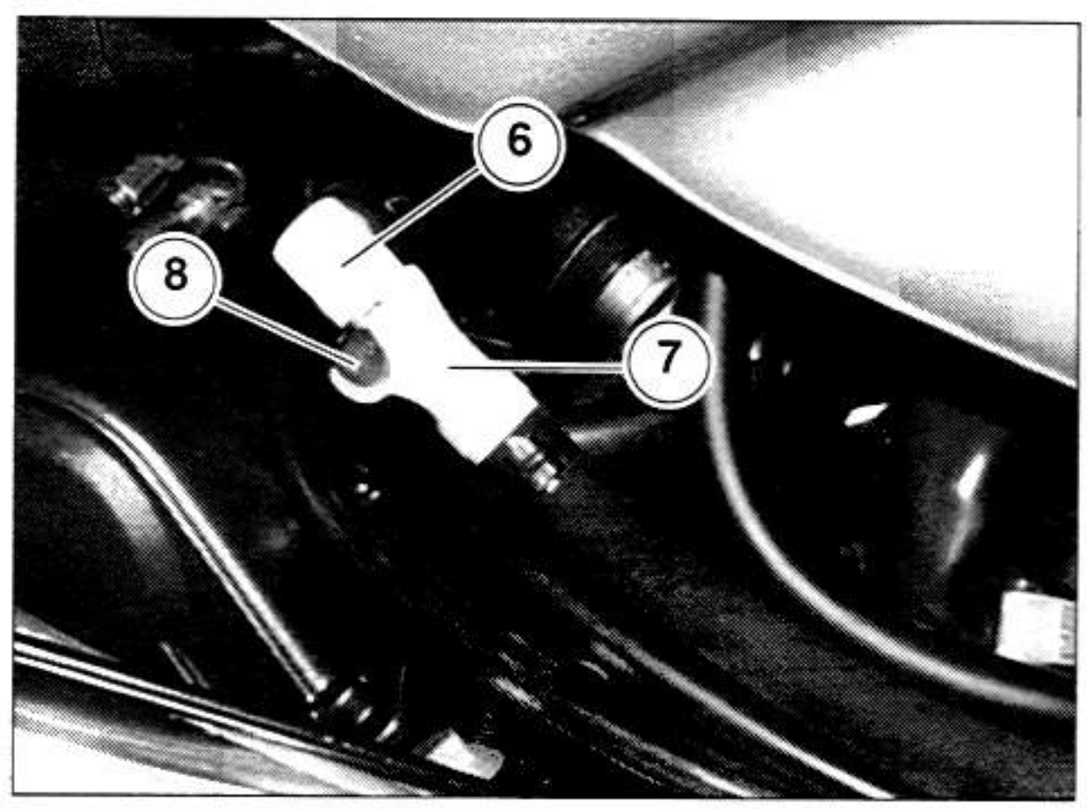

- Firmly grasp the tank (5) from the front or back, raise it and cautiously place it on the prepared surface, without turning it over.

⚠ WARNING

When reassembling, make sure the tank is positioned correctly (lines and electrical cable must not be tangled and/or crushed).

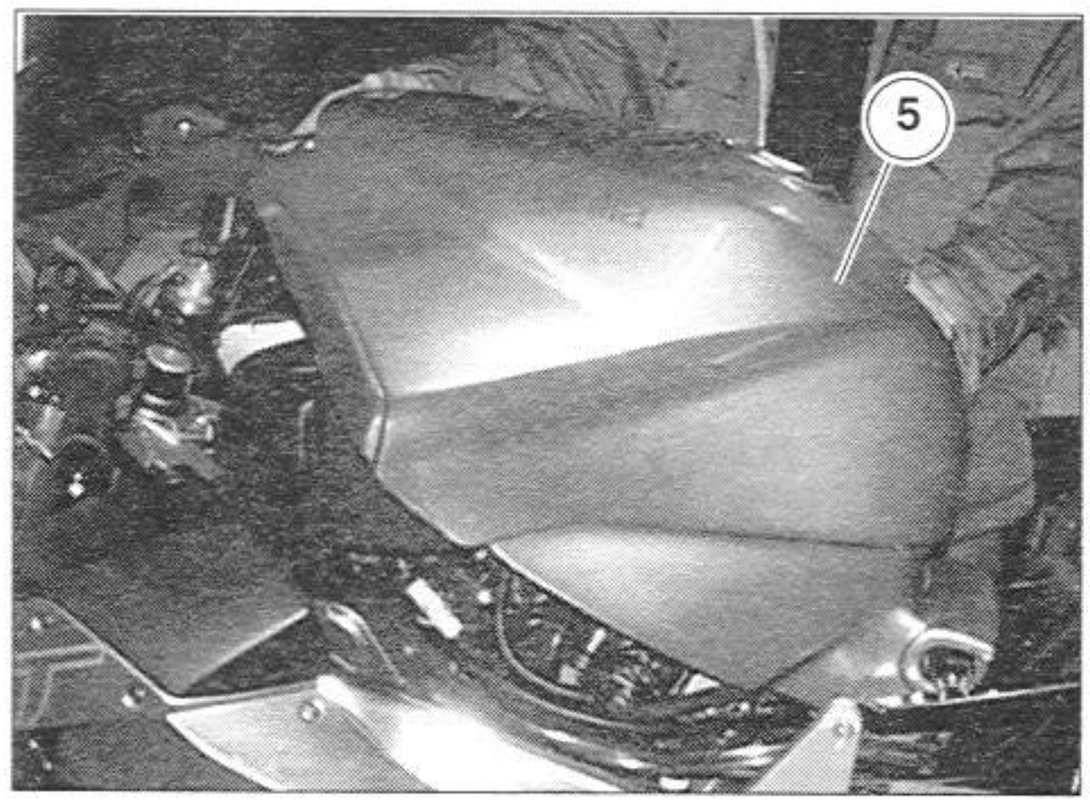

7.1.6 REMOVING THE FUEL TANK COMPLETELY

Carefully read 1.3.9 (PRECAUTIONS AND GENERAL INFORMATION), 1.4.1 (FUEL) and 4.1 (FUEL TANK).

- Drain any fuel remaining in the tank, see 2.9 (DRAINING FUEL FROM THE TANK).
- Partially remove the fuel tank, see 7.1.5 (PARTIALLY REMOVING THE FUEL TANK).
- Turn the tank upside down.

NOTE Place an absorbent cloth under the banjo screw (1) to catch any fuel that spills.

- Loosen the banjo screw (1) by approximately half a turn, then wait a few seconds to allow the system to depressurize.
- Unscrew and remove the banjo screw (1) and retrieve the two gaskets (2).

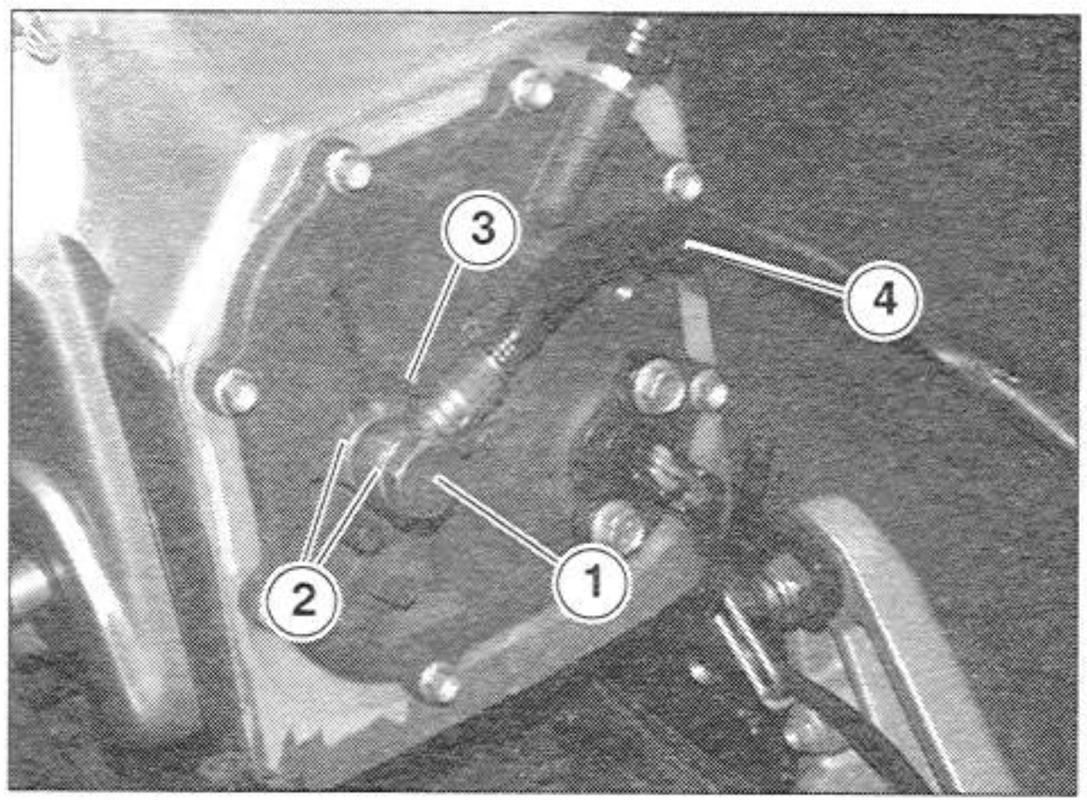

Tightening torque for banjo screw (1): 16.2 ftlb (22 Nm).

⚠ DANGER

When reassembling, use two new gaskets (2) and torque the banjo screw (1) as specified, so that the tank will not leak. This is essential, as the injection pressure is approximately 450 kPa (4.5 bar), and any fuel leakage would create a highly dangerous situation, as the leaking fuel could contact high temperature parts of the engine.
A special seat (3) is provided to ensure that the banjo (4) is correctly positioned during reassembly. The fuel delivery line (4) must not be twisted, or placed where it is likely to be pinched by other components; it must be replaced if found to be damaged or deteriorated.

- Remove the tank completely.
- If the lower front soundproofing and rear insulating panels appear damaged, replace them.

7.1.7 REMOVING THE FUEL TANK CAP

Carefully read 1.4.1 (FUEL) and 4.1 (FUEL TANK).

- Place the vehicle on the center stand.
- Unscrew and remove the three screws (1).

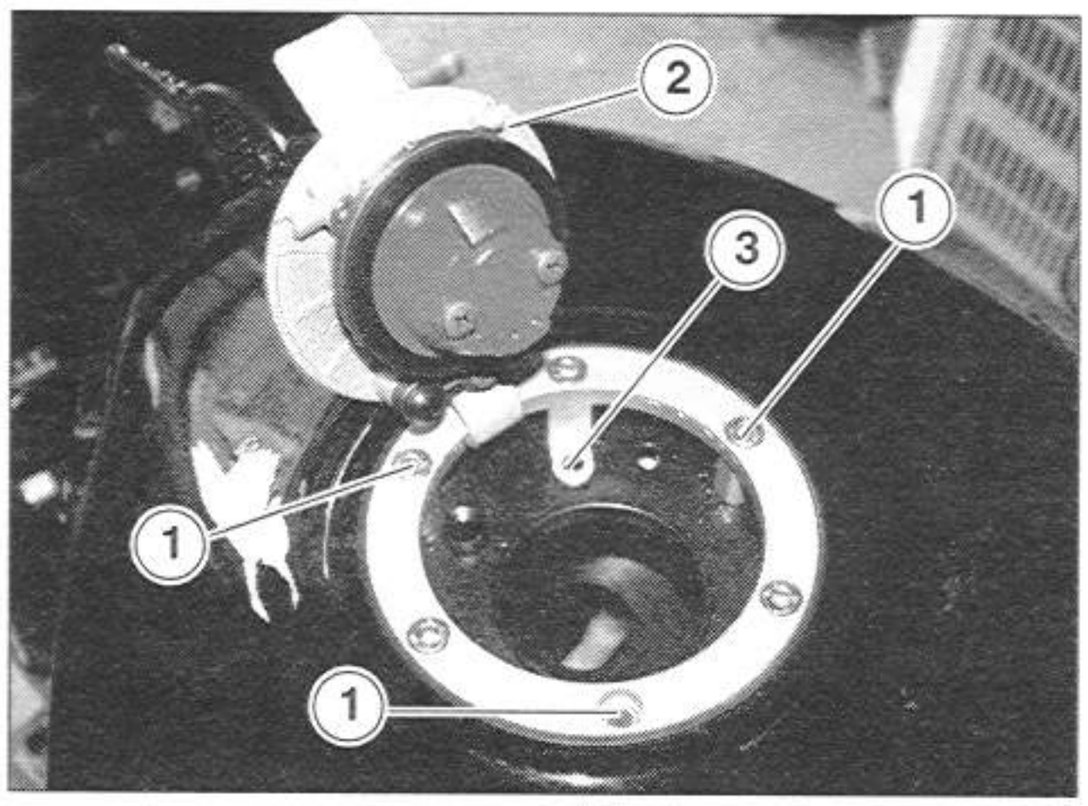

Tightening torque for screws (1): 3.6 ftlb (5 Nm).

NOTE You may leave the other three screws mounted, since they are purely decorative.

- Open the cap (2).

WARNING

When removing the screw (3), be careful not to drop it into the tank.

- Unscrew and remove the screw (3).

Tightening torque for screws (3): 3.6 ftlb (5 Nm).

- Remove the plug (2) complete with ring-nut (4).

WARNING

Plug the tank opening to prevent any foreign matter from accidentally entering.

7.1.8 REMOVING THE AIR FILTER CASE

Carefully read 1.3.9 (PRECAUTIONS AND GENERAL INFORMATION).

- Remove the air filter, see 2.10 (AIR FILTER).
- Release the clamp (1) and disconnect the hose (2).
- Release the two clamps (3) and pull out the two lines (4)
- Unscrew the six screws (8).

Tightening torque for screws (8): 5.2 ftlb (7 Nm).

- Raise the filter case (9).
- Release the clamp (5) and disconnect the hose (6).
- Disconnect the electrical connector (7) from the step motor.

WARNING

When reassembling, make sure the electrical connector is fitted properly.

- Remove the filter case (9), complete with intake manifold (10).

NOTE Plug the openings with a clean rag to prevent any foreign matter from entering the air passages.
The intake manifold (10) must be positioned correctly and aligned perfectly with the air intake holes in the frame.
Make sure that the air filter case (9) rests snugly against the throttle body, and that it is correctly inserted into the intake manifold (10). Only then should the screws (8) be torqued, and the clamp (11) tightened.
If you remove the two air inlet ducts (12), make sure the two O-rings are correctly positioned to prevent any foreign matter from entering the engine.

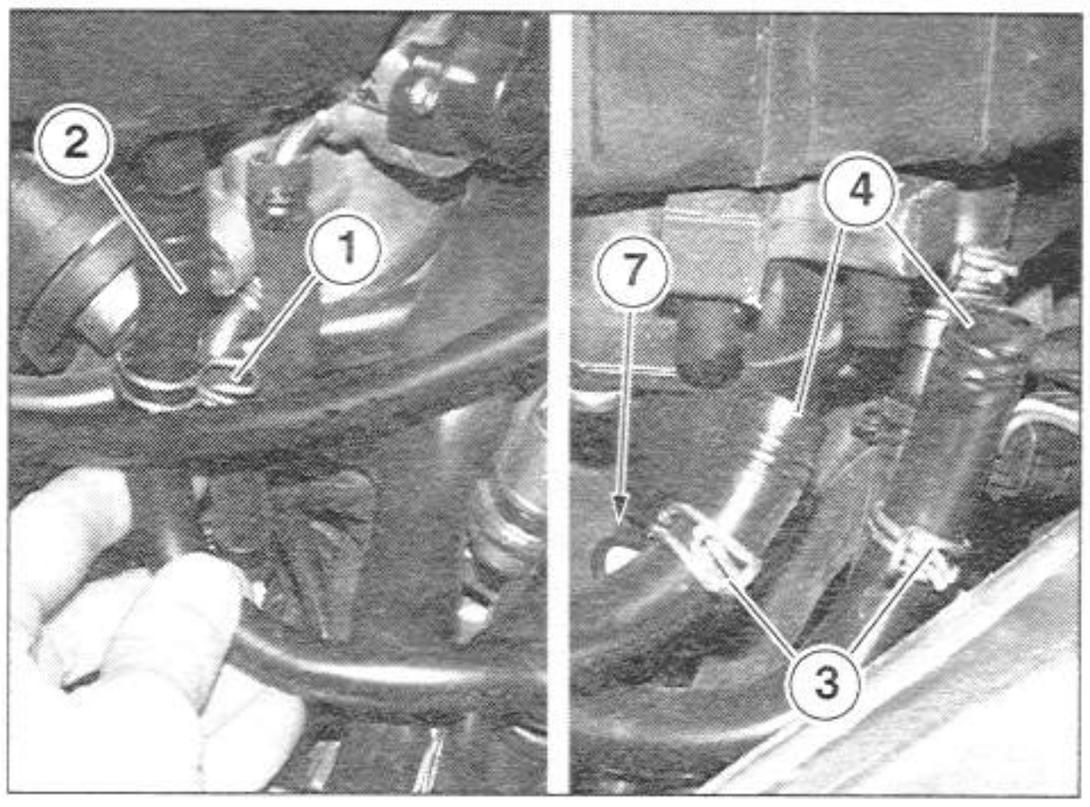

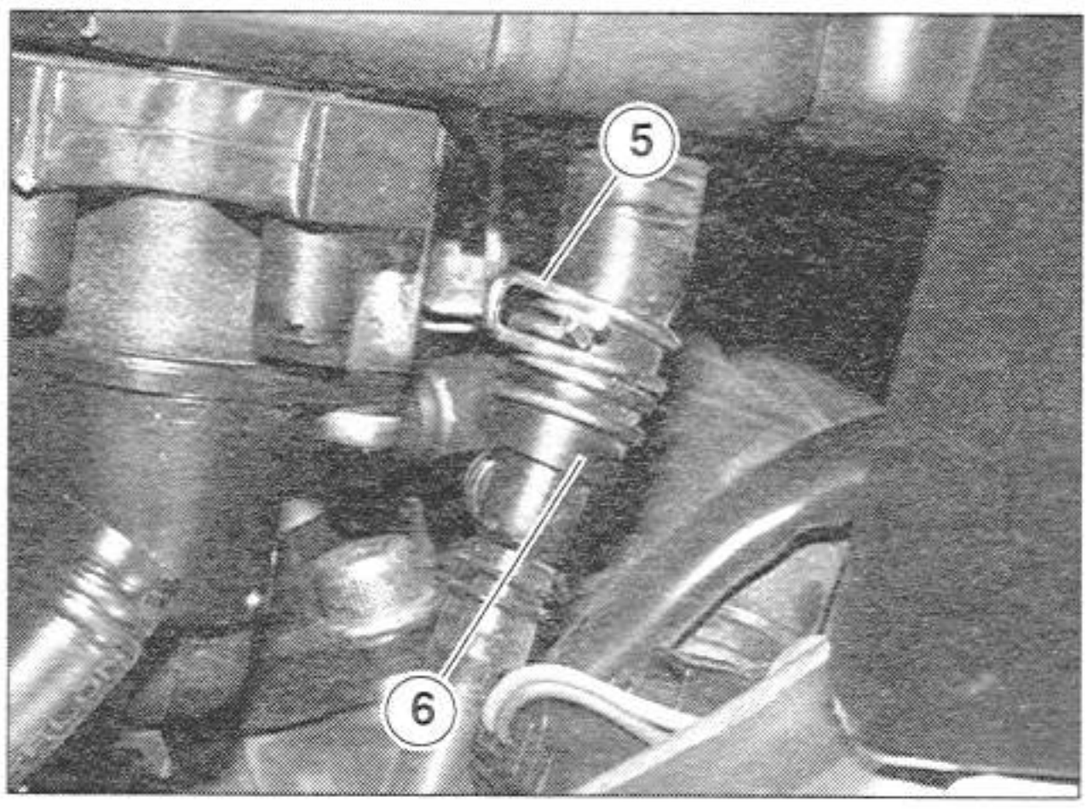

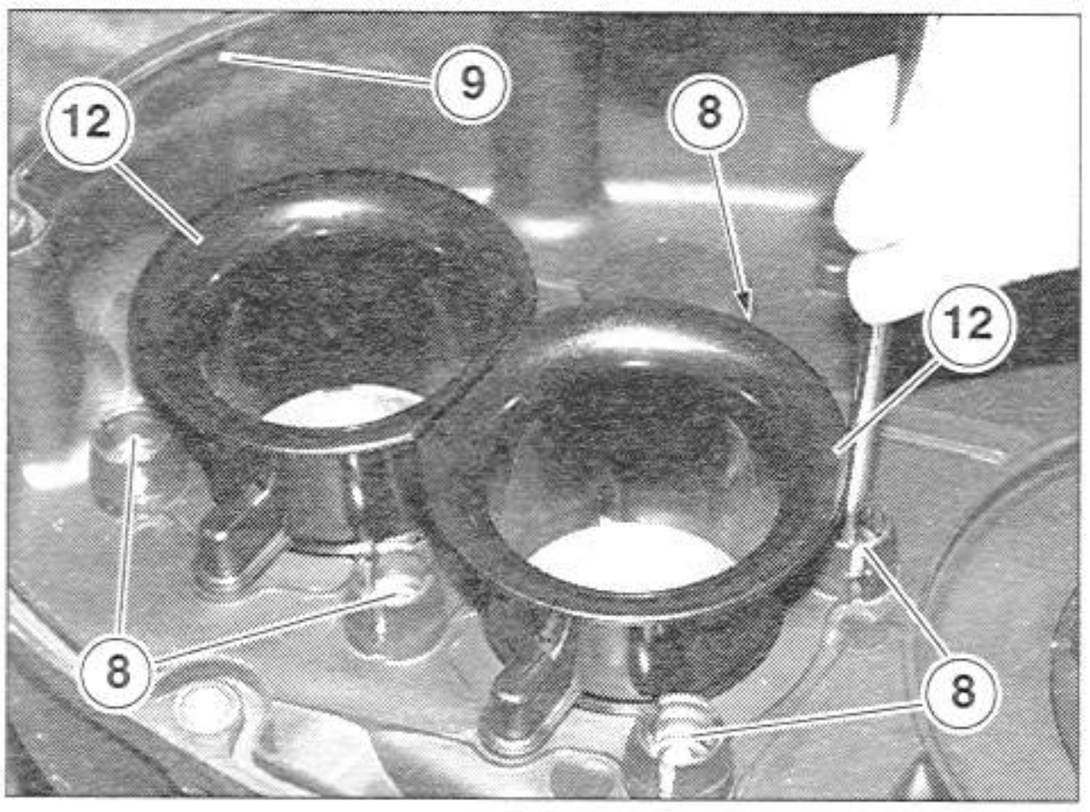

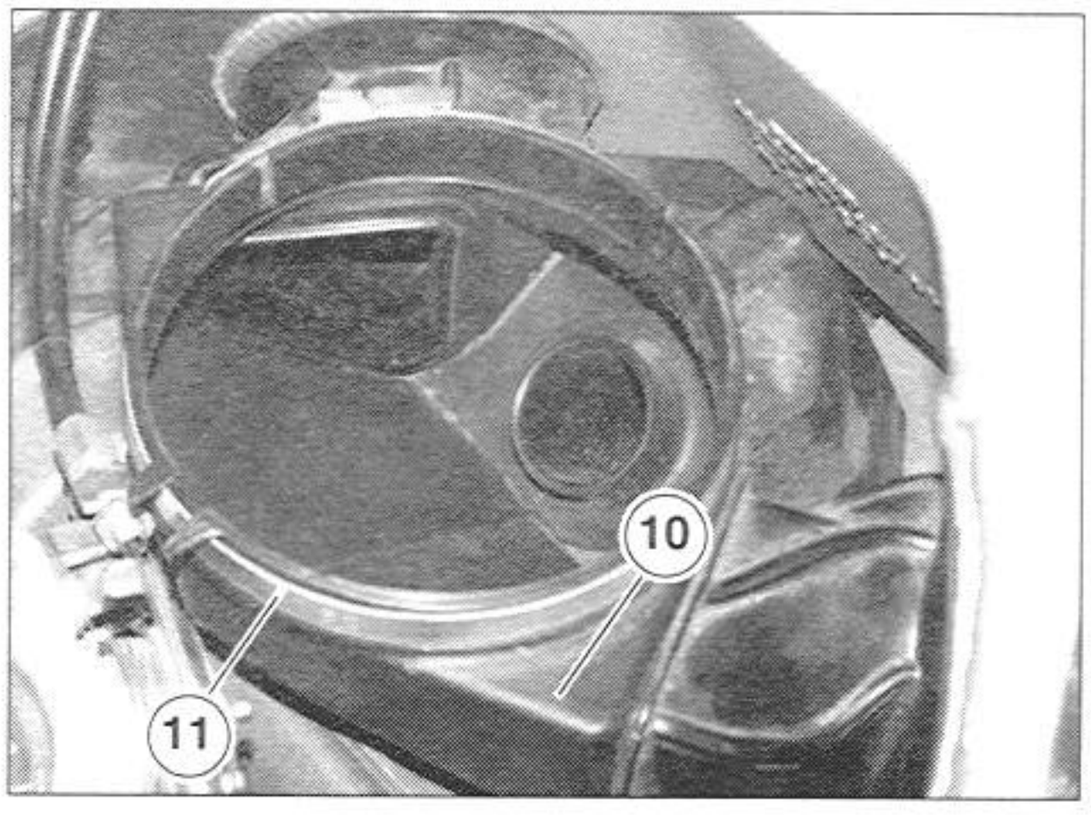

7.1.9 REMOVING THE BATTERY

Carefully read 1.3.9 (PRECAUTIONS AND GENERAL INFORMATION), and 2.4 (BATTERY).

NOTE Removing the battery will reset the functions: digital clock and red line setting

To restore these functions, see 2.3 (MULTIFUNCTION COMPUTER).

- Set the ignition switch to "⊗".
- Remove the saddle, see 7.1.1 (REMOVING THE SADDLE).
- Unscrew and remove the screw (1) on the negative terminal (-).
- Move the negative cable (2) to one side.
- Pull back the red rubber boot (3).
- Unscrew and remove the screw (4) on the positive terminal (+).
- Move the positive cable (5) to one side.

⚠ WARNING

Do not force electrical cables.

- Remove the start relay (6).
- ★Unscrew and remove the screw (7).

Tightening torque for screw (7): 3.6 ftlb (5 Nm).

- Lift the bracket (8) holding the battery in place.
- Firmly grasp the battery (9) and lift it out of its compartment.

⚠ DANGER

Once it has been removed, store the battery in a safe place and out of reach of children.

- Store the battery on a flat surface and in a cool, dry place.

⚠ WARNING

When reassembling, first connect the positive cable (+), then the negative cable (-).

- When reassembling, the battery (9) must be placed in its compartment with the terminals facing towards the back of the vehicle.

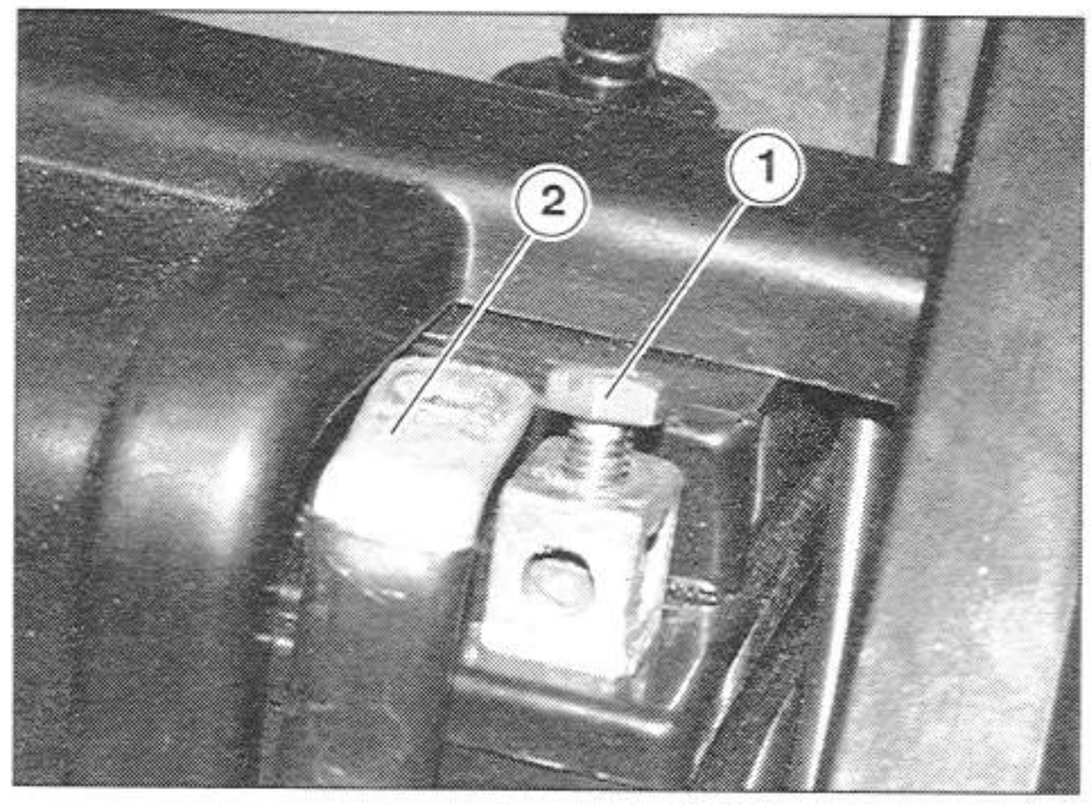

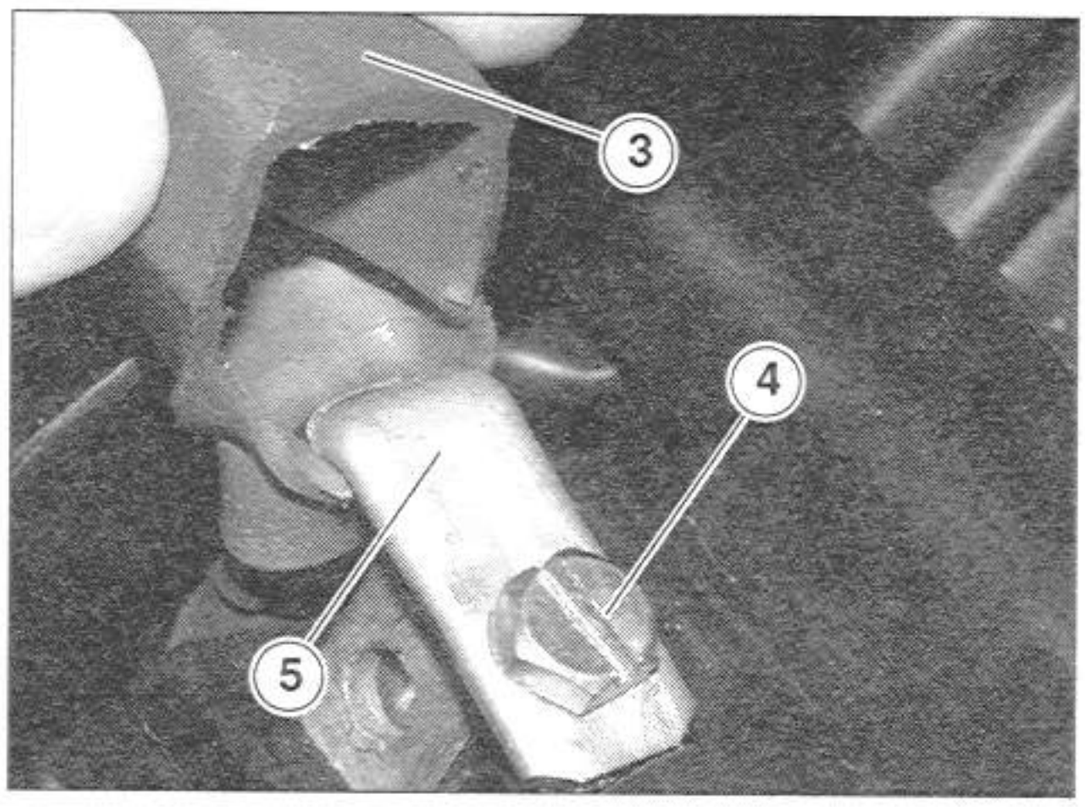

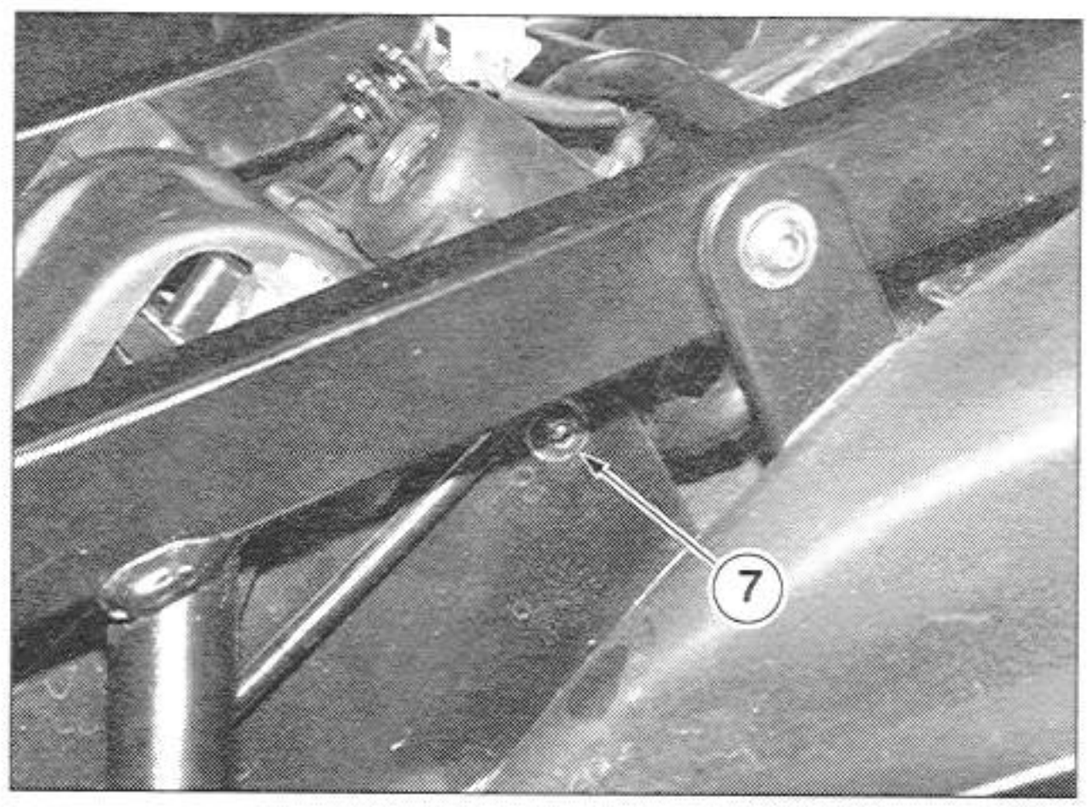

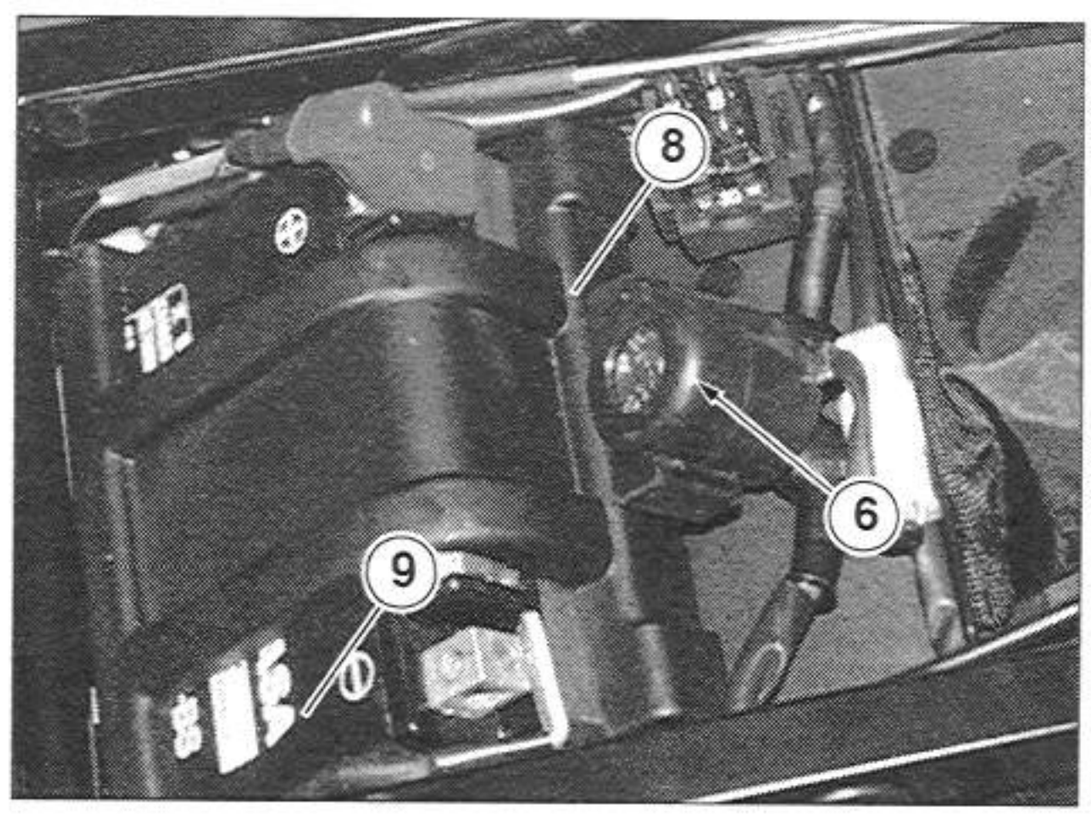

7.1.10 REMOVING THE ELECTRONIC CONTROL UNIT

Carefully read 1.3.9 (PRECAUTIONS AND GENERAL INFORMATION).

- Set the ignition switch to "⊗".
- Remove the saddle, see 7.1.1 (REMOVING THE SADDLE).
- Remove the left fairing, see 7.1.28 (REMOVING THE SIDE FAIRINGS).
- Disconnect the two connectors (1) leading to the control unit (2).

⚠ WARNING

When reassembling, make sure the two electrical connectors (1) are fitted properly.

- Unscrew and remove the two screws (3).

Tightening torque for screws (3): 7.3 ftlb (10 Nm).

- Remove the control unit (2).

⚠ WARNING

When replacing the control unit (2), you must also align the throttle valve position sensor, see 4.10.3 (THROTTLE VALVE POTENTIOMETER).

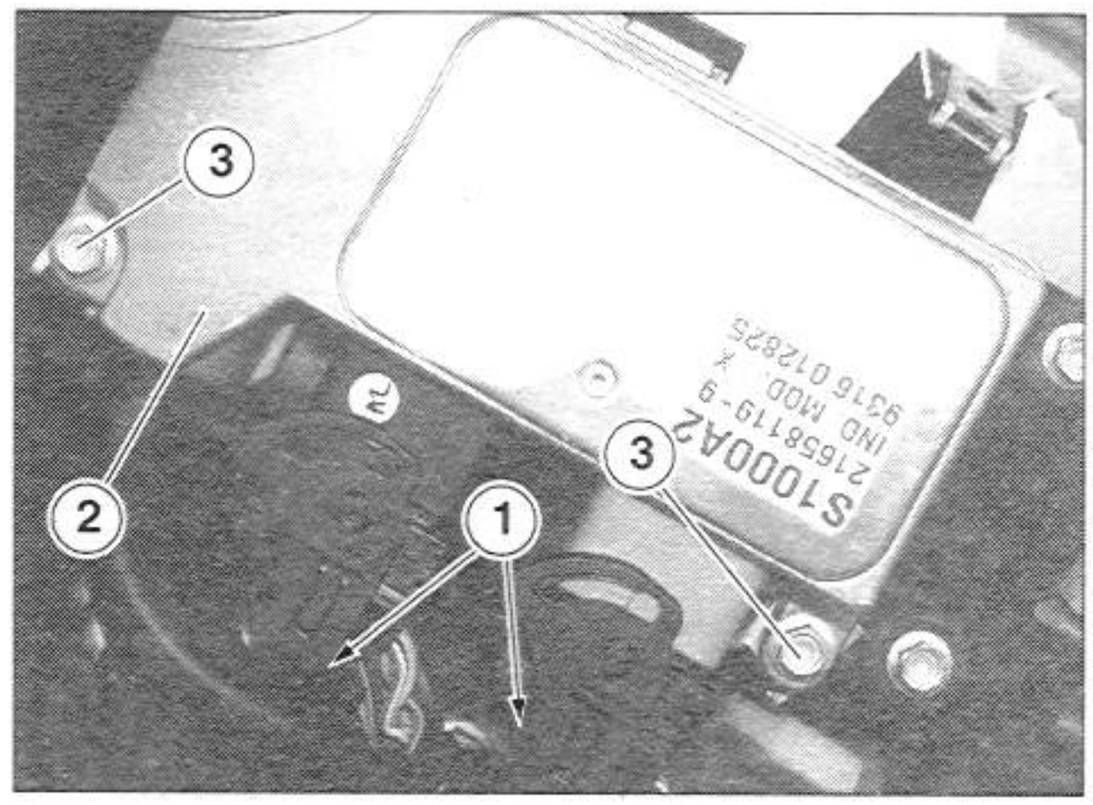

7.1.11 REMOVING THE HANDGRIP FROM THE LEFT HANDLEBAR

Carefully read 1.3.9 (PRECAUTIONS AND GENERAL INFORMATION).

- Place the vehicle on the stand.
- Set the ignition switch to "⊗".
- Hold the balance weight in place with a pair of adjustable pliers, wrapped in electrical tape to avoid damaging the balanceweight (1).
- Unscrew and remove the screw (2).

Tightening torque for screws (2): 8 ftlb (12 Nm).

- Remove the balanceweight (1).
- Slip off and remove the peg (3).
- Slip off and remove the O-ring (4).

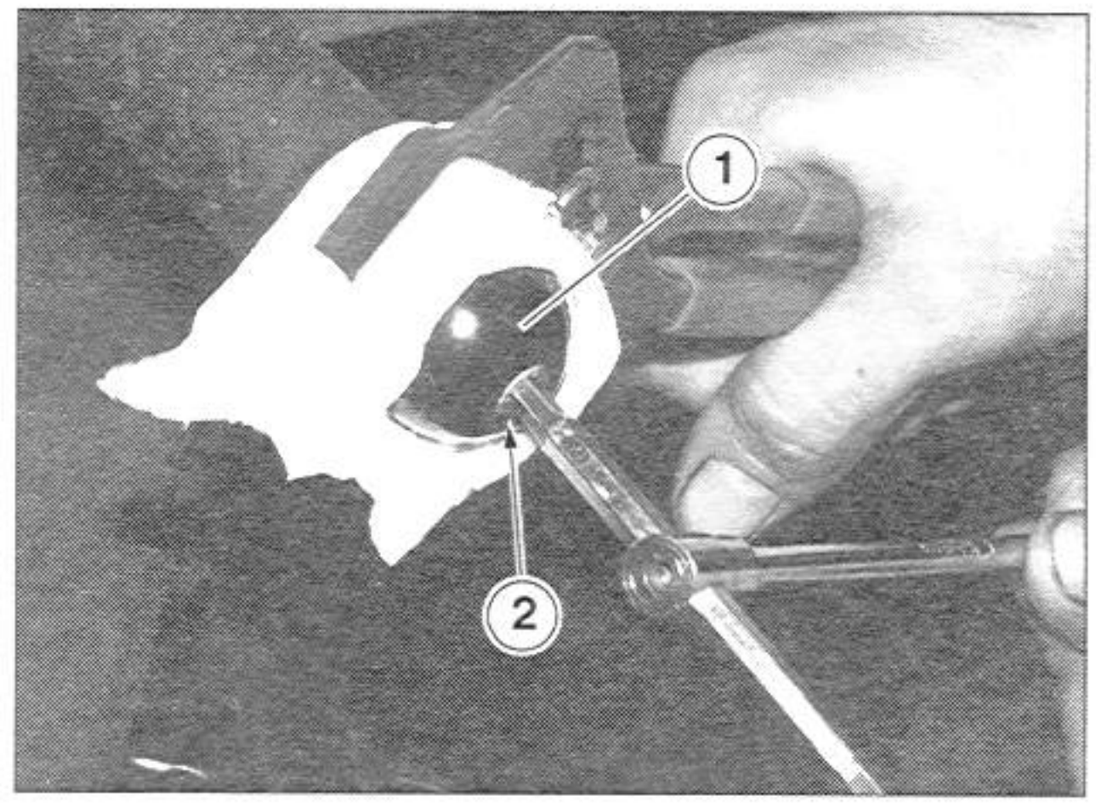

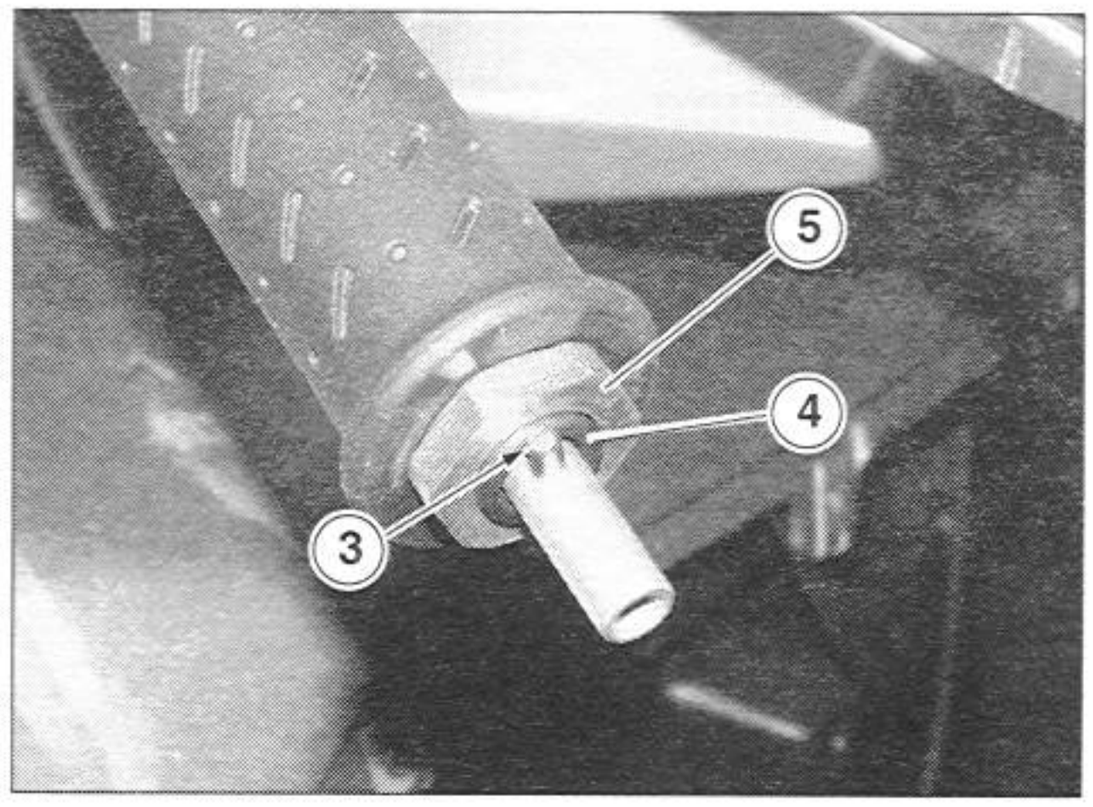

- Unscrew and remove the terminal (5).

Tightening torque for terminal (5): 25.8 ftlb (35 Nm).

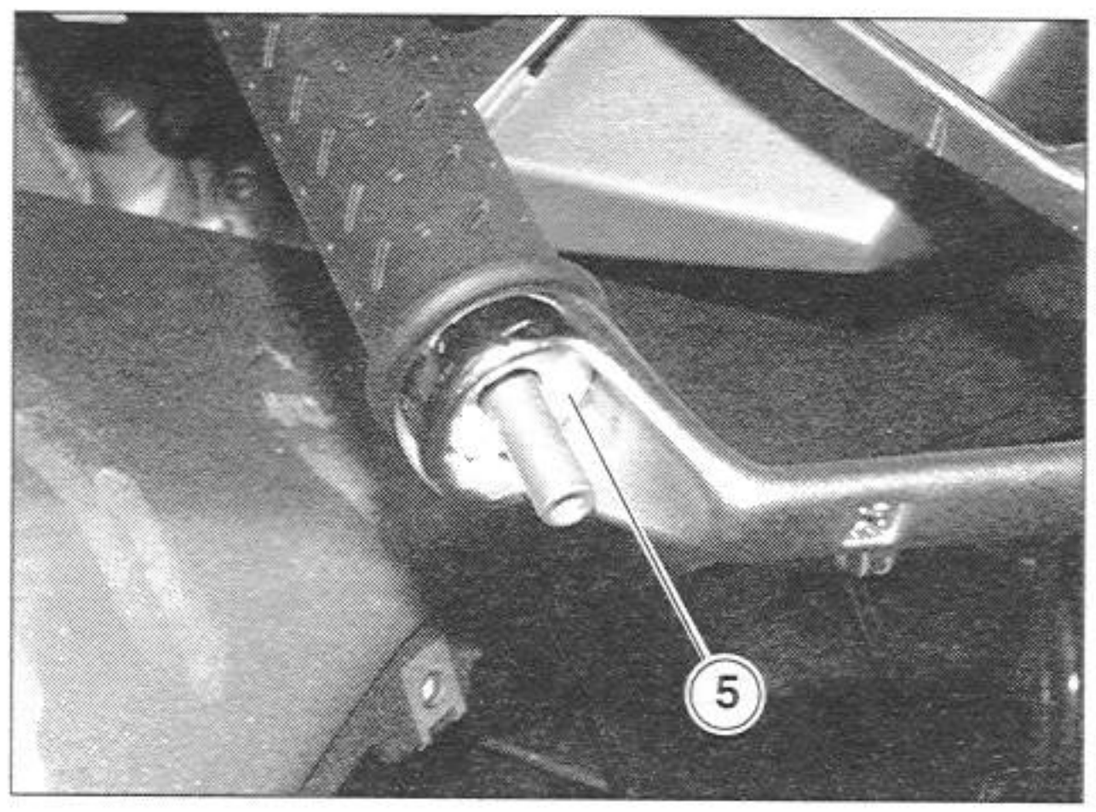

- Remove the pin (6) and the rubber bushing (7).

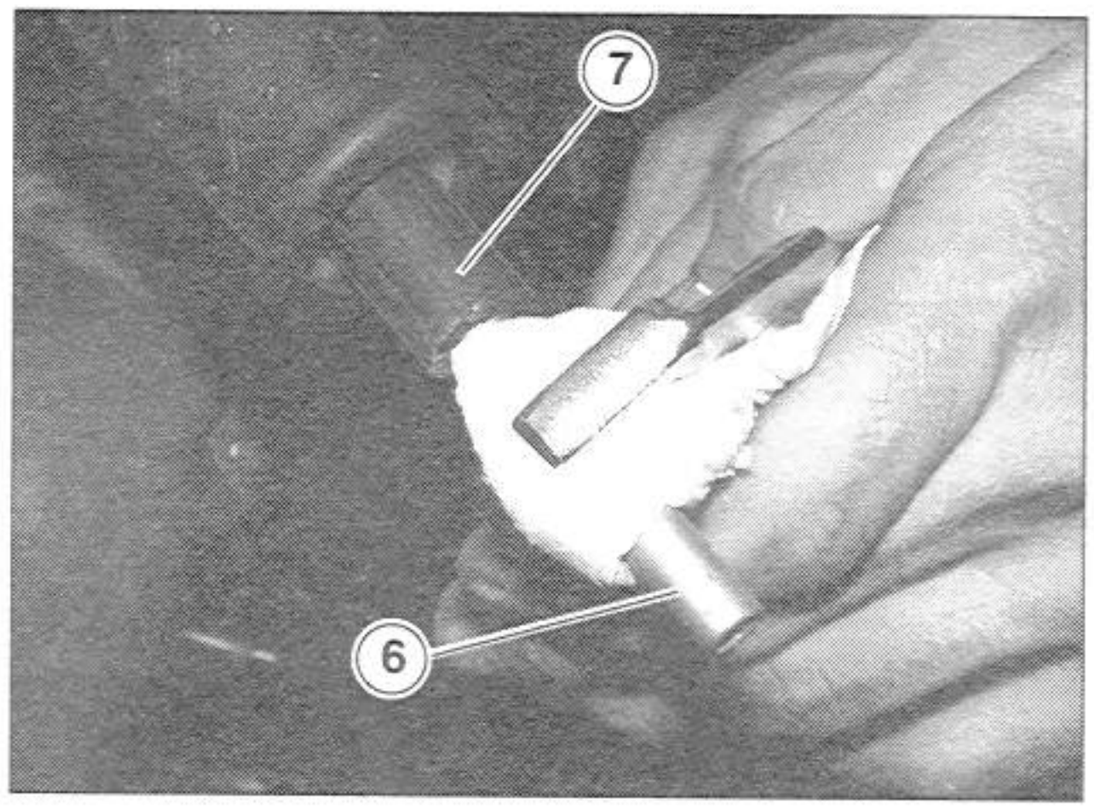

- Insert the tip of a compressed air gun between the handlegrip (8) and the handlebar (9).
- Moving the gun tip with a circular motion, blow air into the space. At the same time, use your other hand to grasp and pull off the grip (8).

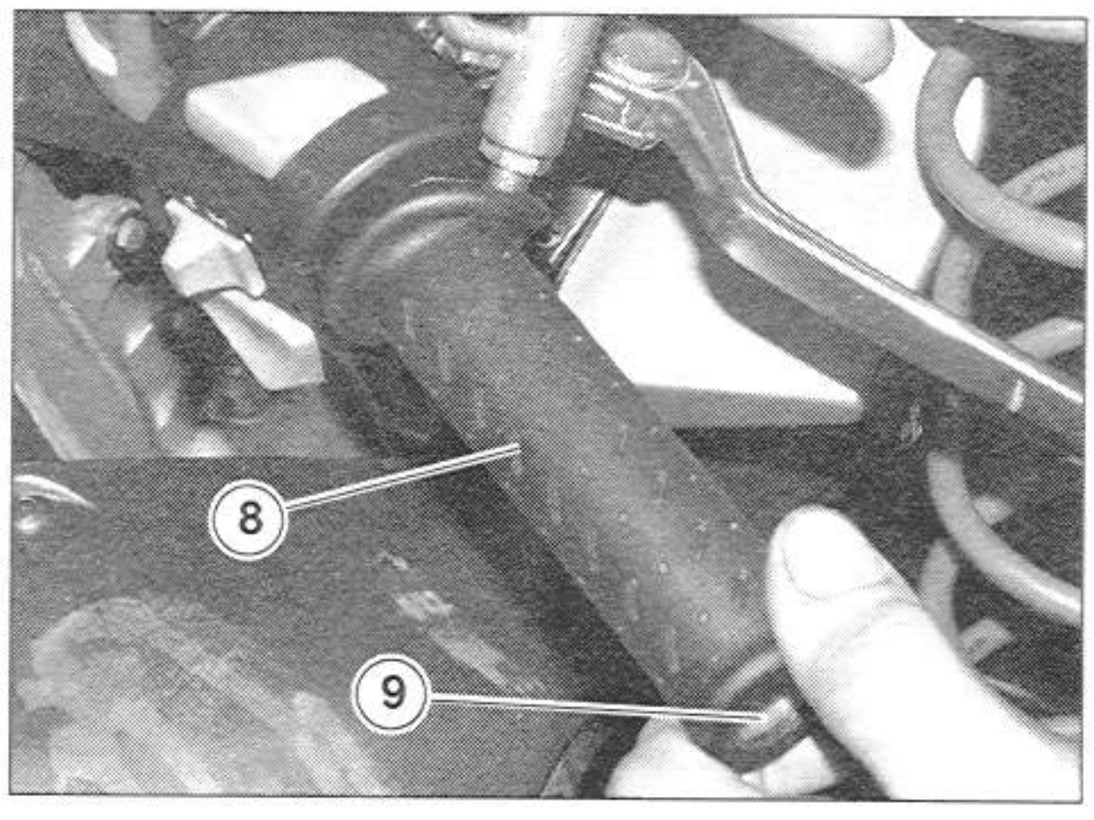

7.1.12 REMOVING THE CLUTCH CONTROL

Carefully read 1.3.9 (PRECAUTIONS AND GENERAL INFORMATION).

- Place the vehicle on the stand.
- Set the ignition switch to "⊗".
- Unscrew and remove the two screws (1) fastening the clutch control (2).

Tightening torque for screws (1): 7.3 ftlb (10 Nm).

- Remove the clutch lever clamp (3) and move the clutch control (2).

NOTE When reassembling the clutch lever clamp (3) must be placed with the arrow, engraved on the top, facing upward.

Should you need to completely remove the clutch control (2):

- Follow the first three steps described in chapter 2.21 (CHANGING THE FRONT BRAKE FLUID).
- When all the fluid has drained out, unscrew and remove the screw (4) and retrieve the two seals.

Tightening torque for screw (4): 14.5 ftlb (20 Nm).

⚠ WARNING

When reassembling, replace the two seals with two new washers of the same type.

- Use a small blade screwdriver to pry out and remove clutch switch (5) from the two slots on the clutch control lever (2).
- Remove the clutch control (2).

If necessary remove the clutch cylinder,see 3.2.1 (REMOVING THE CLUTCH CYLINDER).

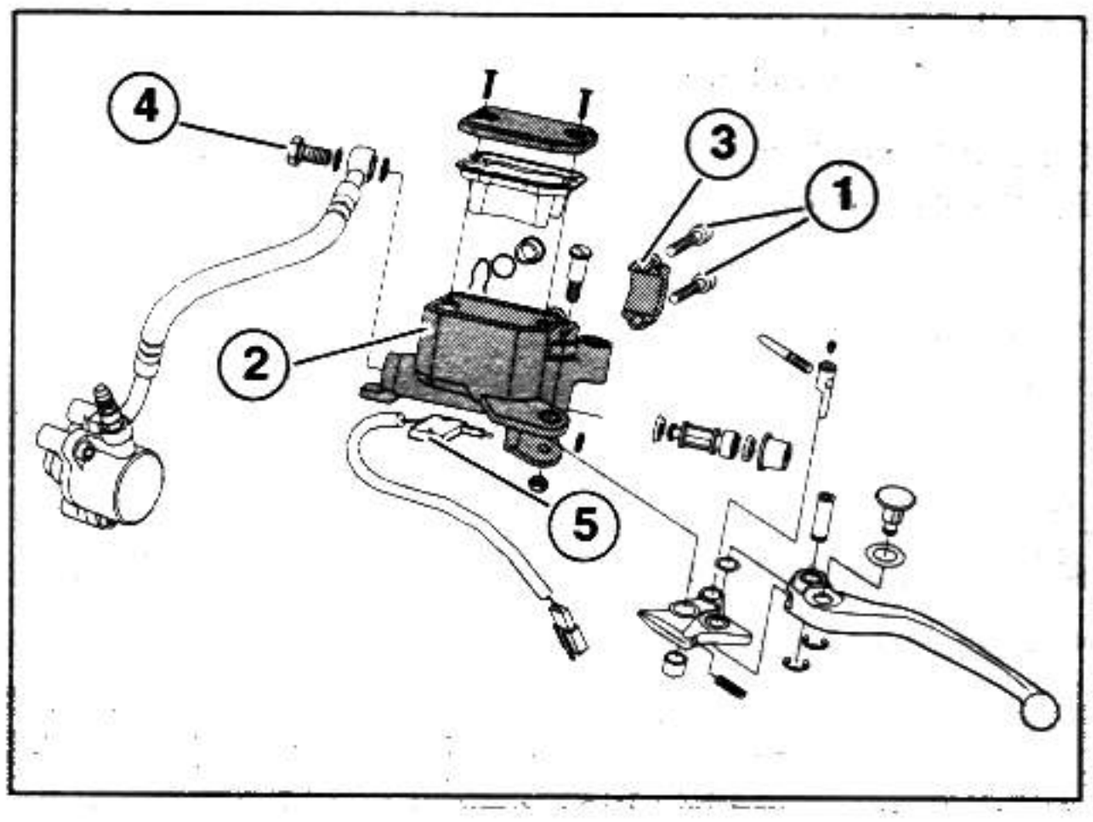

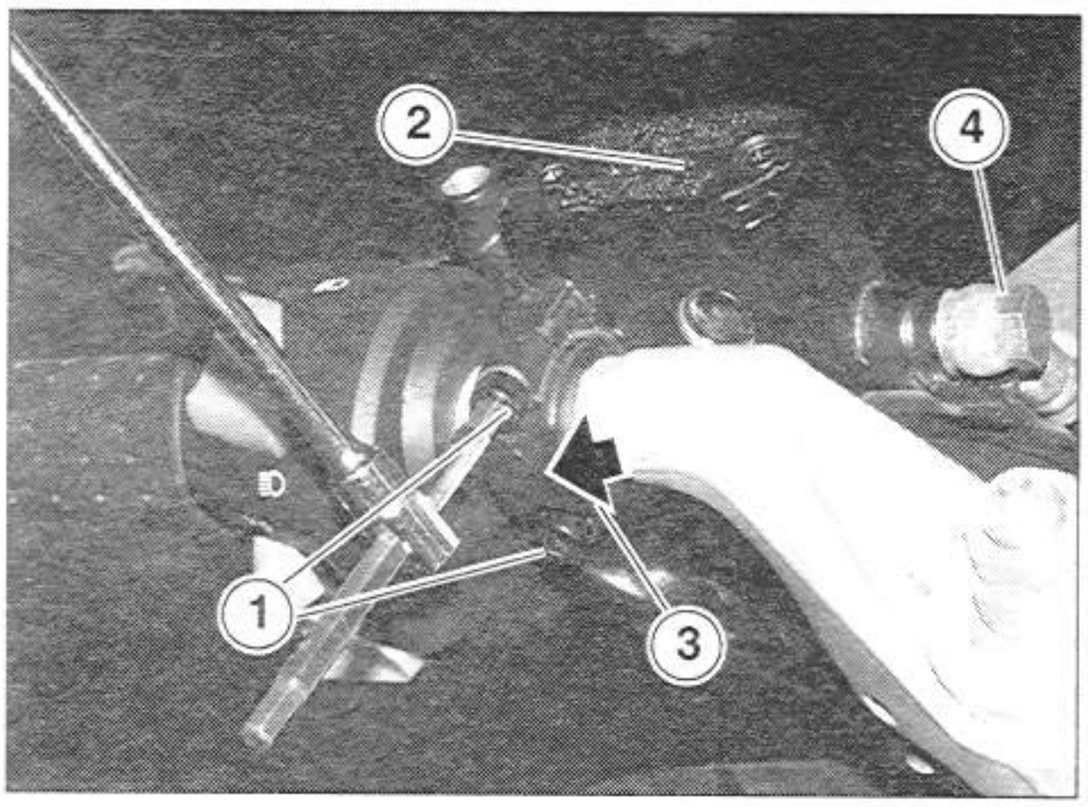

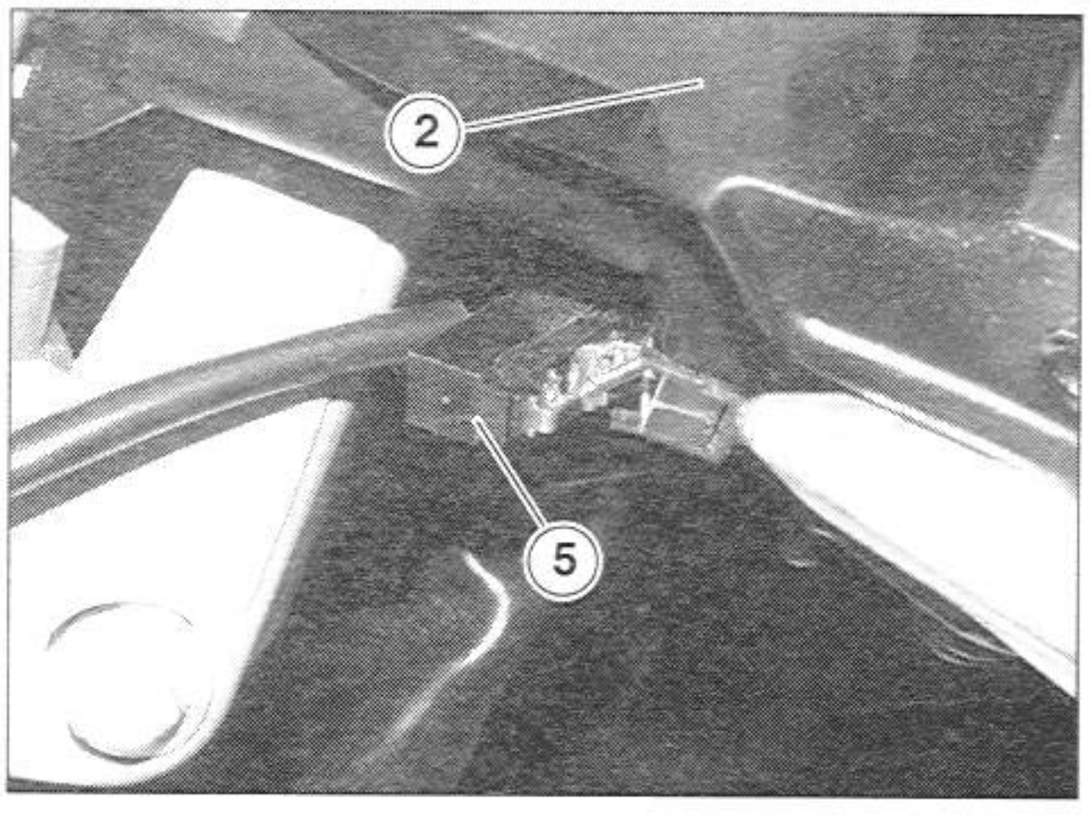

7.1.13 REMOVING ELECTRICAL CONTROLS ON THE LEFT HANDLEBAR

Carefully read 1.3.9 (PRECAUTIONS AND GENERAL INFORMATION).

- Place the vehicle on the stand.
- Set the ignition switch to "⊗".
- Unscrew and remove the two screws (1) fastening the two half-cylinders (2-3) from the bottom.

Tightening torque for screws (1): 1.4 ftlb (2 Nm).

- Separate the two half-cylinders (2-3).

⚠ WARNING

When reassembling, first position the lower half-cylinder (2), making sure that the positioning pin is inserted in the corresponding hole on the handlebar.

- Remove the front fairing, see 7.1.20 (REMOVING THE FRONT FAIRING).
- Free the wiring from the two holding clamps (4).

NOTE Have the same number of clamps ready to use when reassembling.

- Disconnect the electrical connector (5) of the left dimmer switch.

⚠ WARNING

When reassembling, make sure the connector (5) is fitted properly.

- Remove the two halves of the electrical controls (2-3).

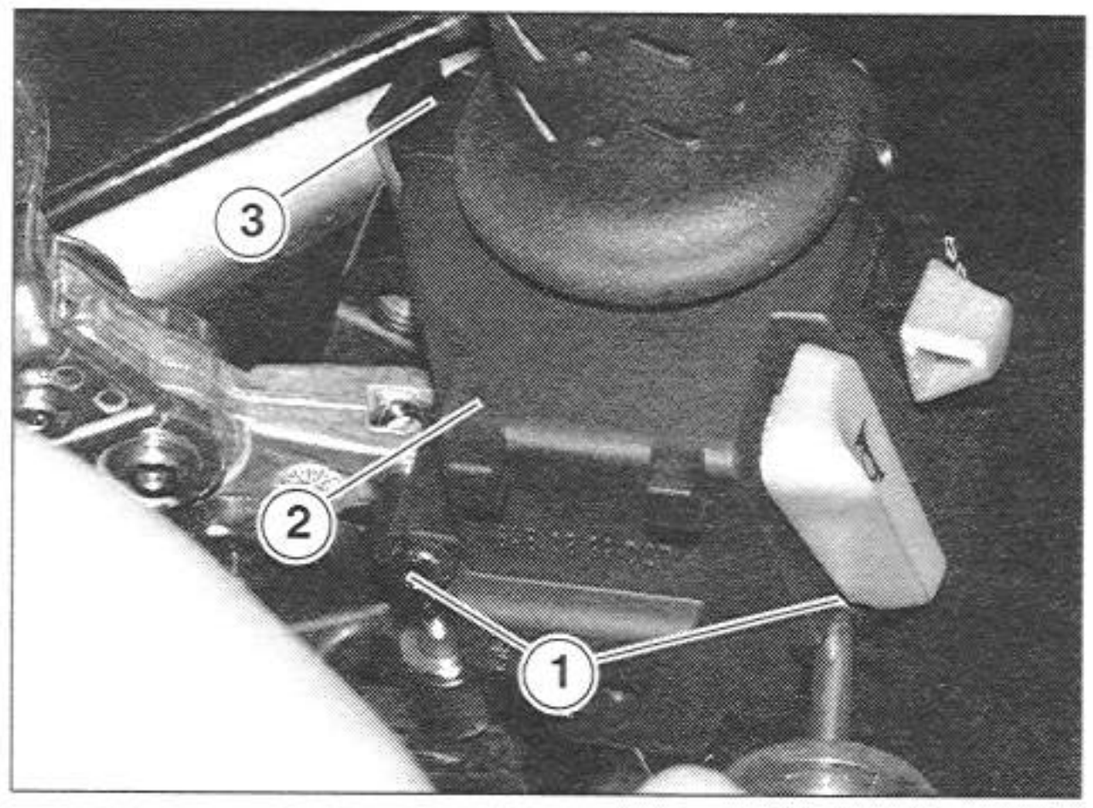

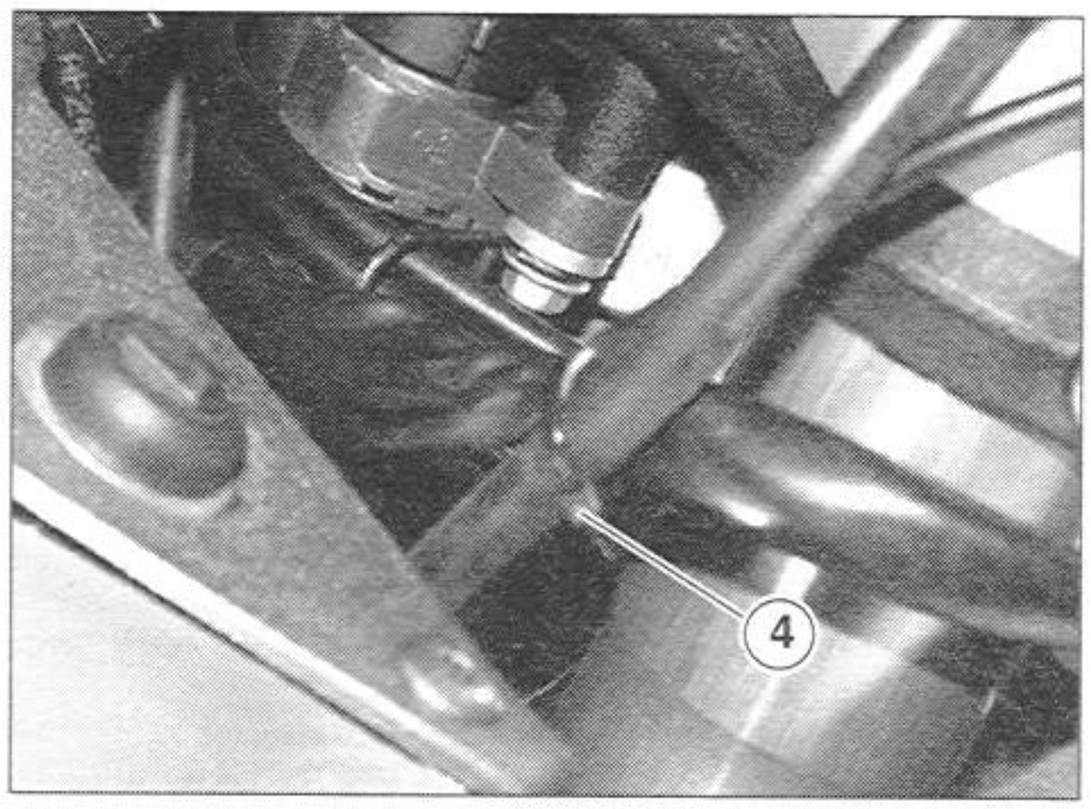

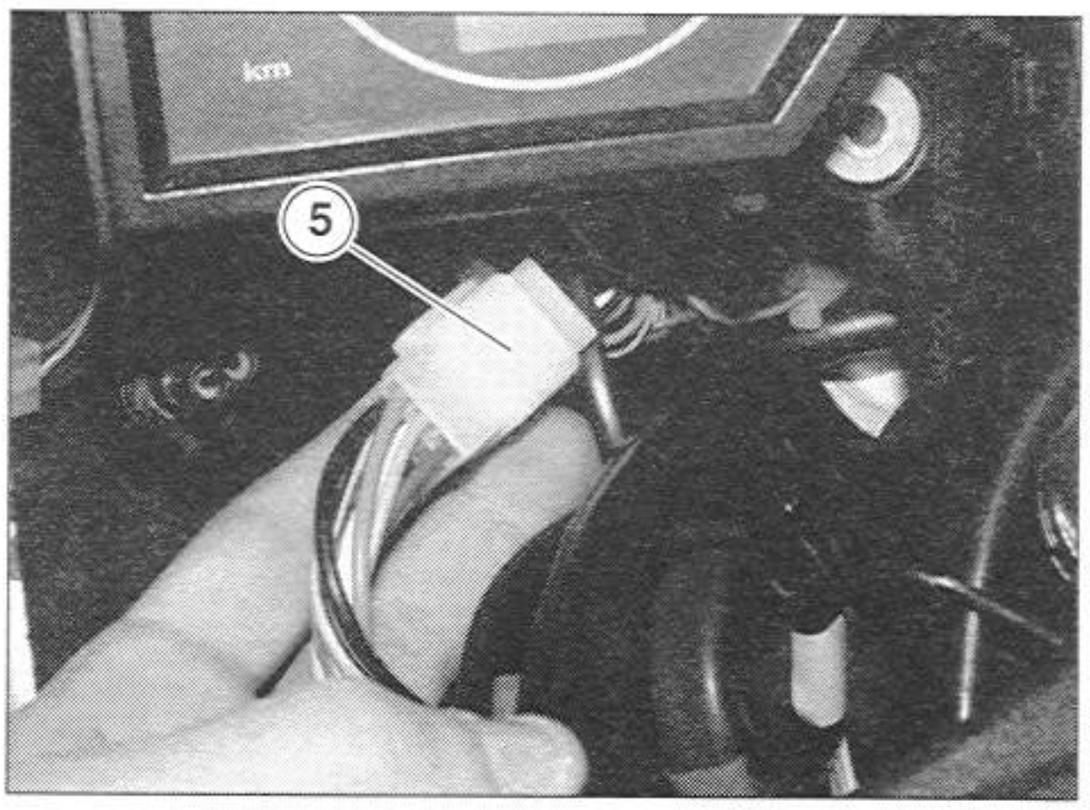

7.1.14 REMOVING THE THROTTLE CONTROL

Carefully read 1.3.9 (PRECAUTIONS AND GENERAL INFORMATION).

- Follow the first nine steps described in chapter 7.1.11 (REMOVING THE HANDGRIP FROM THE LEFT HANDLEBAR).
- Unscrew and remove the two screws (1).

Tightening torque for screws (1): 1.4 ftlb (2 Nm).

- Remove the rear half (2) of the throttle control housing.
- Remove the air filter case, see 7.1.8 (REMOVING THE AIR FILTER CASE).

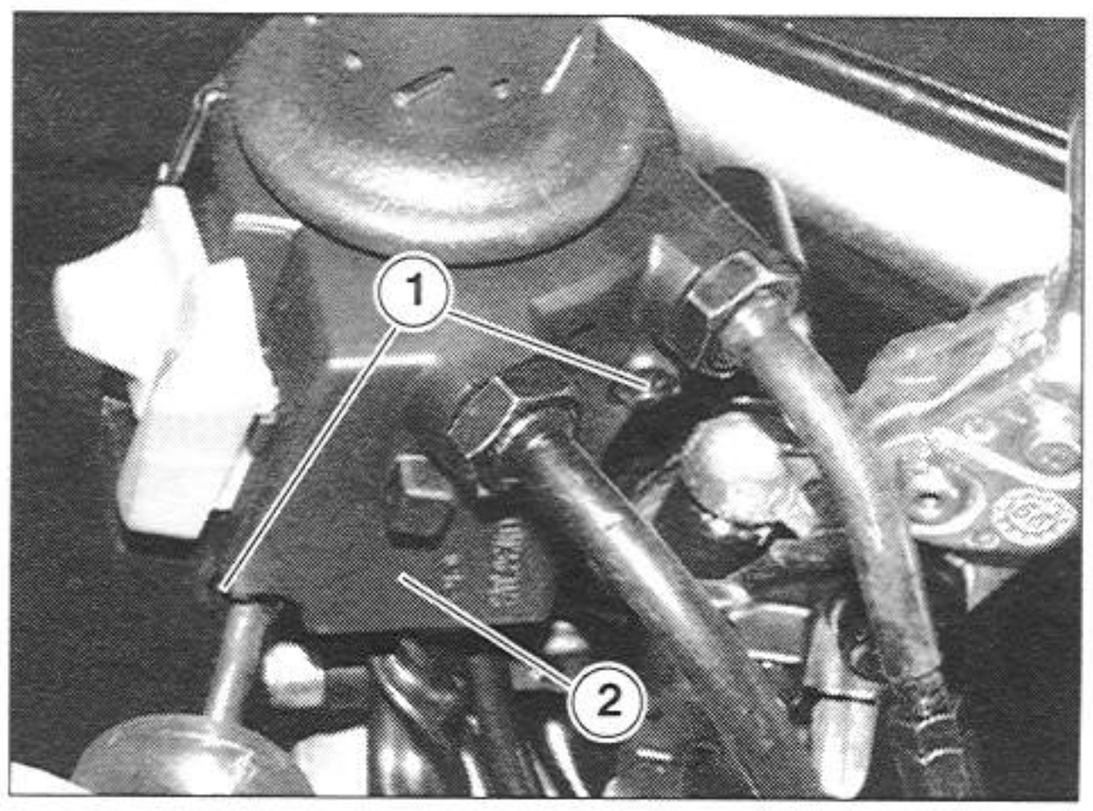

- Loosen the lock nut (3).
- Release the throttle cable adjuster (4) from its coupling.
- Disconnect the throttle cable.
- Repeat the last three steps for the other throttle cable as well.

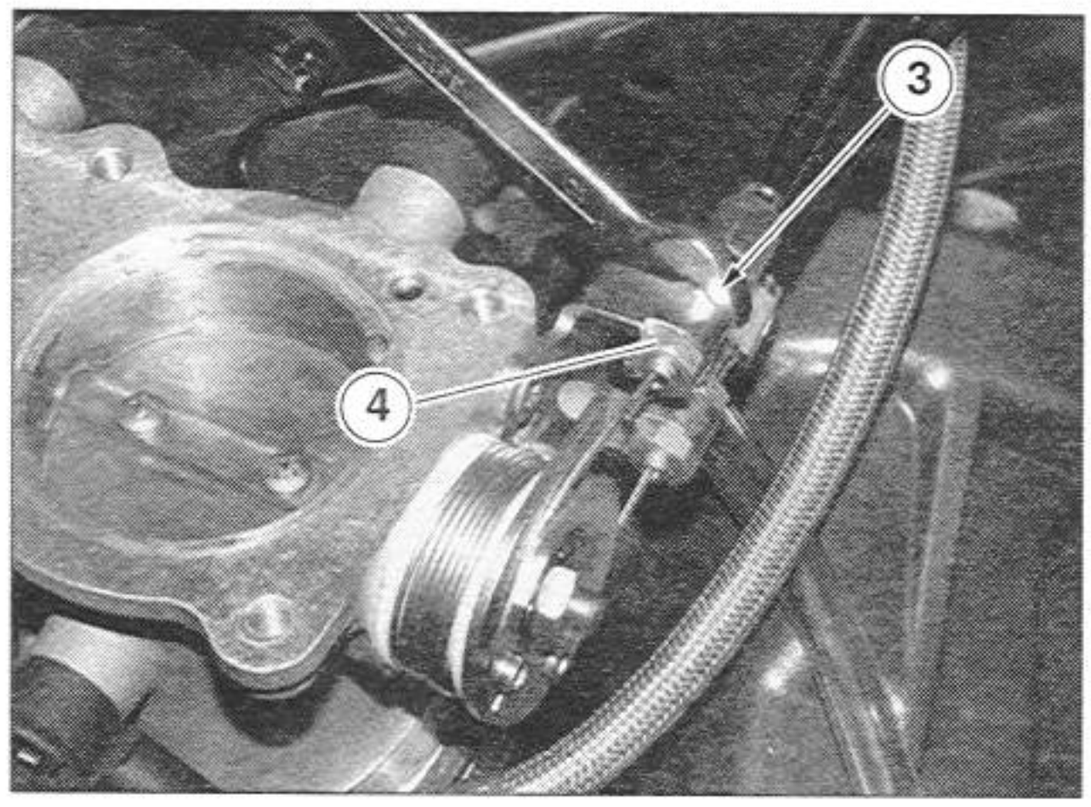

⚠ WARNING

When reassembling make sure that the two throttle cable adjusters are properly fastened to their respective couplings; check and, where necessary, restore the correct clearance, see 2.11.3 (ADJUSTING THE THROTTLE CONTROL).

- Move the winch (5) and disconnect the two throttle cables.
- Slide off the throttle grip (6).

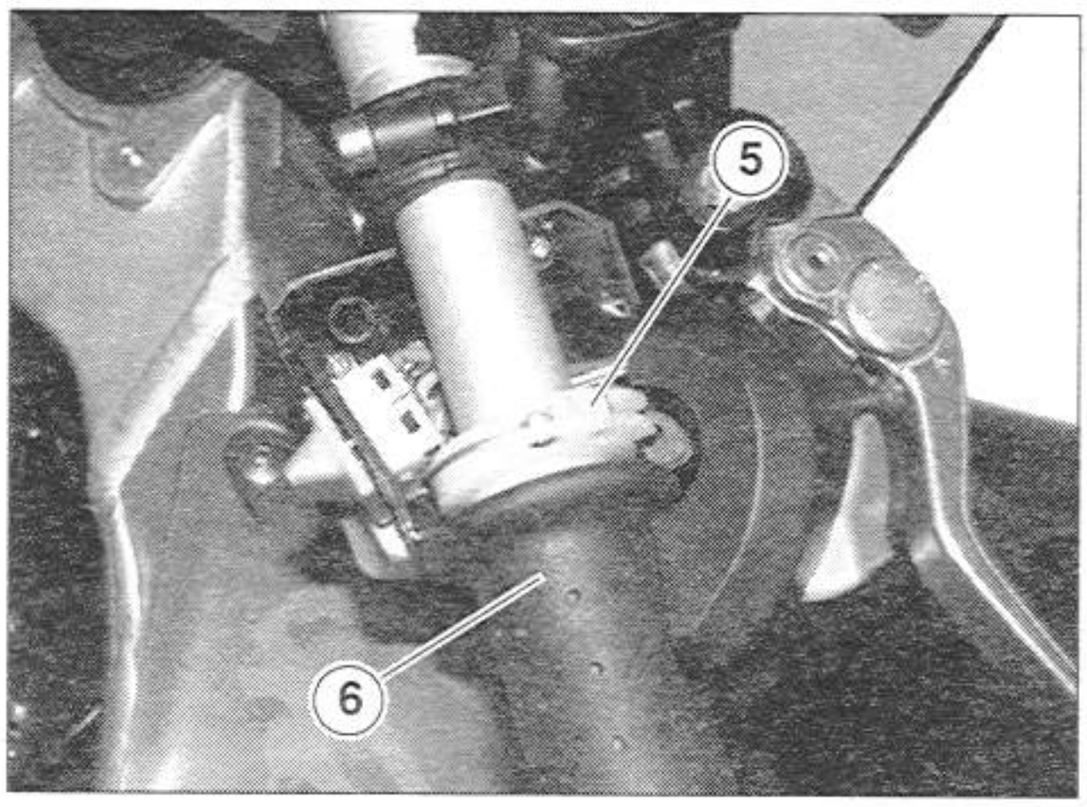

7.1.15 REMOVING THE FRONT BRAKE CONTROL

Carefully read 1.3.9 (PRECAUTIONS AND GENERAL INFORMATION).

- Place the vehicle on the stand.
- Set the ignition switch to "⊗".
- Unscrew and remove the two screws (2) fastening the front brake control (3).

Tightening torque for screw (2): 7.3 ftlb (10 Nm).

- Remove the front brake lever clamp (1) and move the front brake control (3), which remains attached via the brake line.

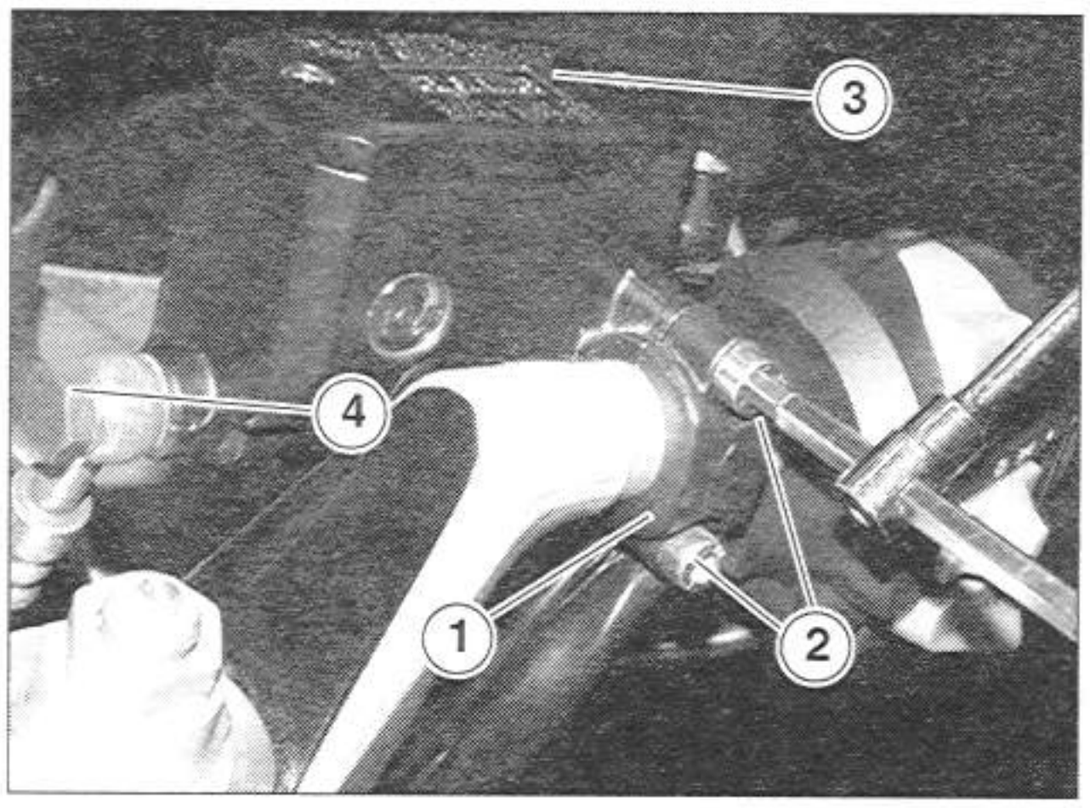

NOTE When reassembling the brake lever clamp (1) must be placed with the arrow, engraved on the top, facing upward.

Should you need to completely remove the front brake control (3):

- Carry out the first three steps described in the chapter 2.21 (CHANGING THE FRONT BRAKE FLUID).
- When all the fluid has drained out, unscrew and remove the screw (4) and retrieve the two seals.

Tightening torque for screw (4): 1.4 ftlb (2 Nm).

⚠ WARNING

When reassembling, replace the two seals with two new washers of the same type.

- Use a small blade screwdriver to pry out and remove the front brake switch (5) from the two slots on the front brake control lever (3).
- Remove the front brake control (3).

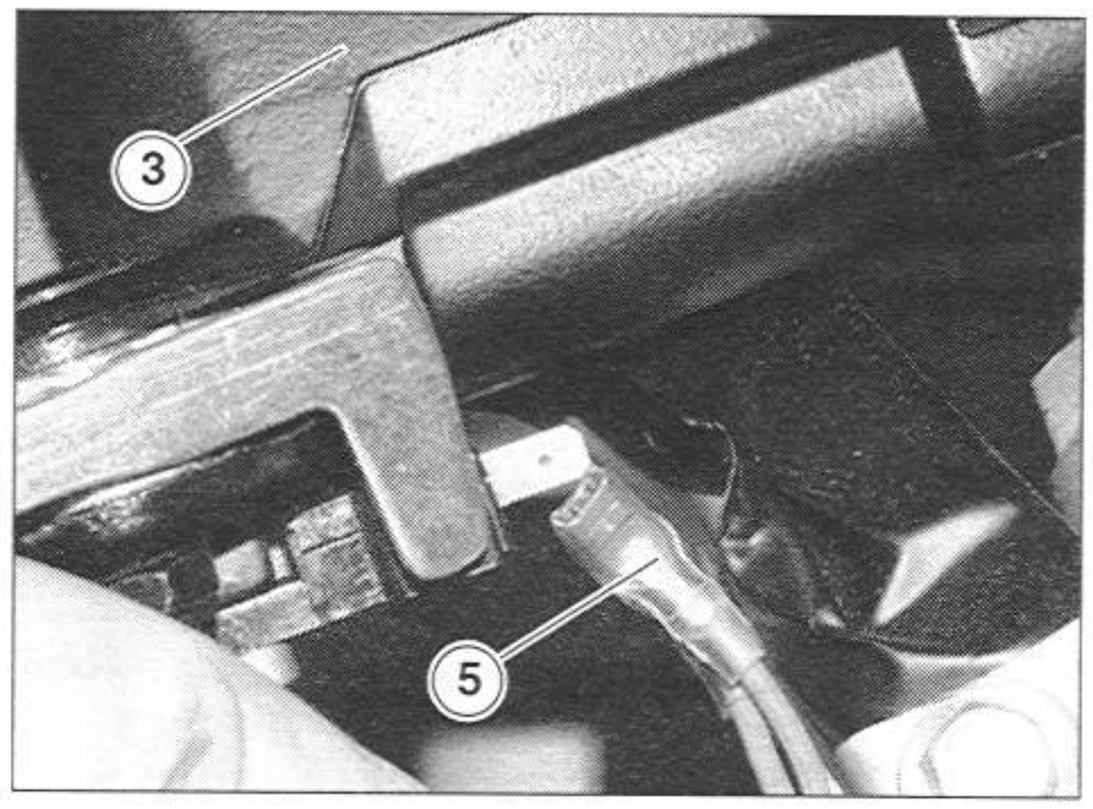

7.1.16 REMOVING ELECTRICAL CONTROLS ON THE RIGHT HANDLEBAR

Carefully read 1.3.9 (PRECAUTIONS AND GENERAL INFORMATION).

- Place the vehicle on the stand.
- Set the ignition switch to "⊗".
- Remove the front fairing, see 7.1.20 (REMOVING THE FRONT FAIRING).
- Disconnect the electrical connector (1) of the right dimmer switch.

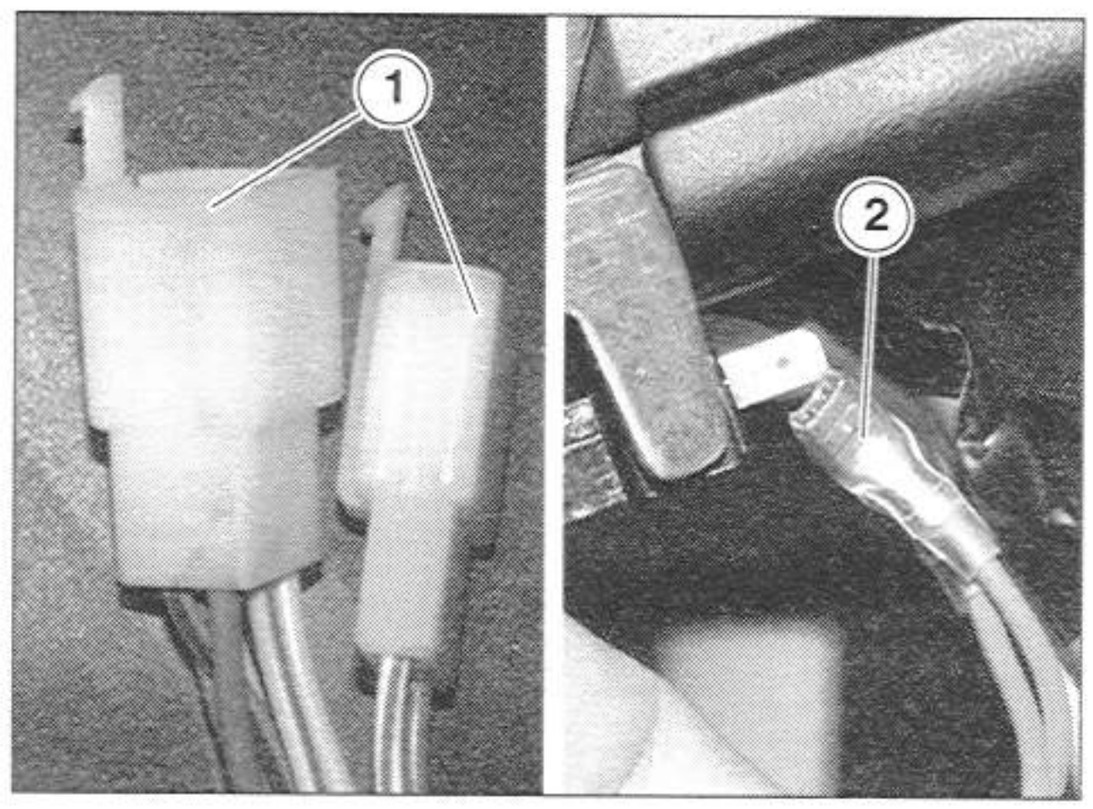

⚠ WARNING

When reassembling, make sure the connector (1) is fitted properly.

- Disconnect the connector (2).

⚠ WARNING

When reassembling, make sure the connector (2) is fitted properly.

- Unscrew and remove the two screws (3-4) fastening the two halves of the controls (5-6) from the bottom.

NOTE When reassembling, the shorter screw (3) must be placed in front.

- Separate and remove the two half-cylinders (5-6).

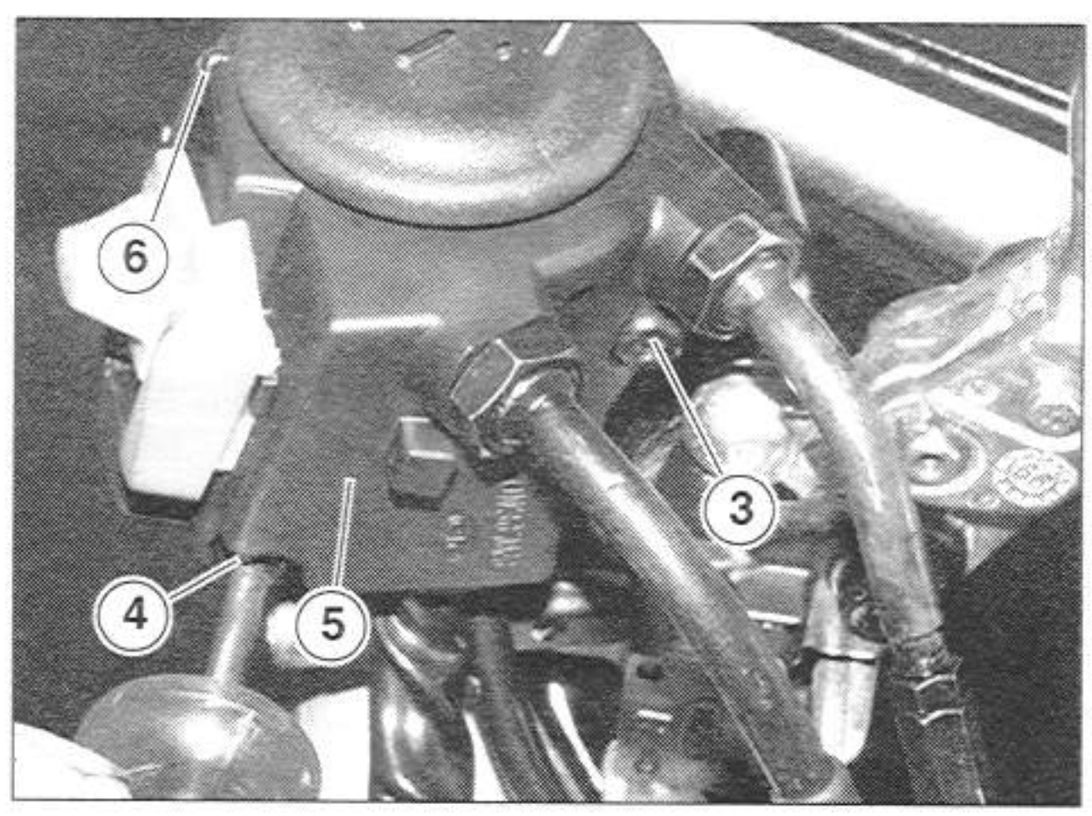

⚠ WARNING

When reassembling, first position the lower portion of the control (5), making sure the positioning pin is inserted in the corresponding hole on the handlebar.

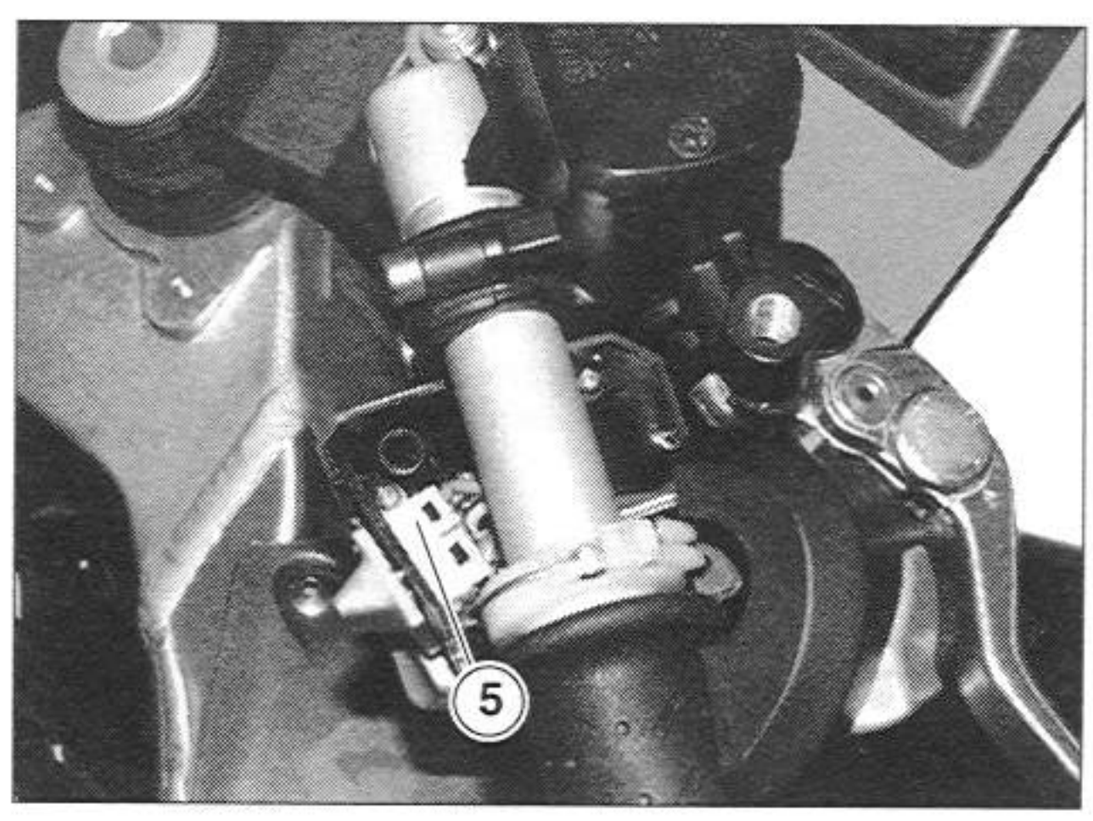

7.1.17 REMOVING THE IGNITION SWITCH/STEERING LOCK

Carefully read 1.3.9 (PRECAUTIONS AND GENERAL INFORMATION).

- Place the vehicle on the stand.
- Set the ignition switch to "⊗".
- Remove the fork head, see 2.28.2 (ADJUSTING THE BEARING PLAY).
- Release the ignition block connector (1) from the main wiring.

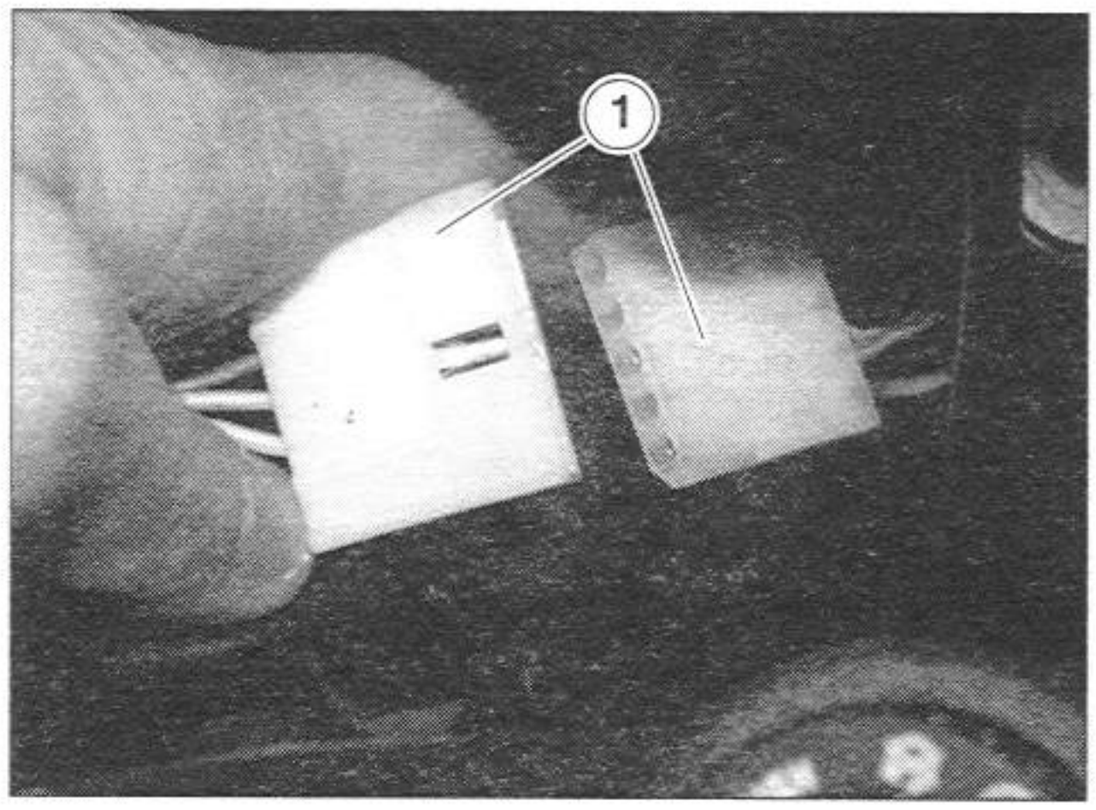

⚠ WARNING

When reassembling, make sure the connector (1) is fitted properly.

- Unscrew and remove the screw (2) retrieving the bushing (3).

NOTE When reassembling, place the cable guide (4) correctly.

- Use a small hammer and chisel to notch the head of the special screw (5), and turn it until it's loose.
- Unscrew by hand and remove the screw (5).

NOTE When reassembling, use a new screw of the same type; Torque the special screw until the head shears off.

- Remove the ignition switch/steering lock (6), sliding it out from underneath.

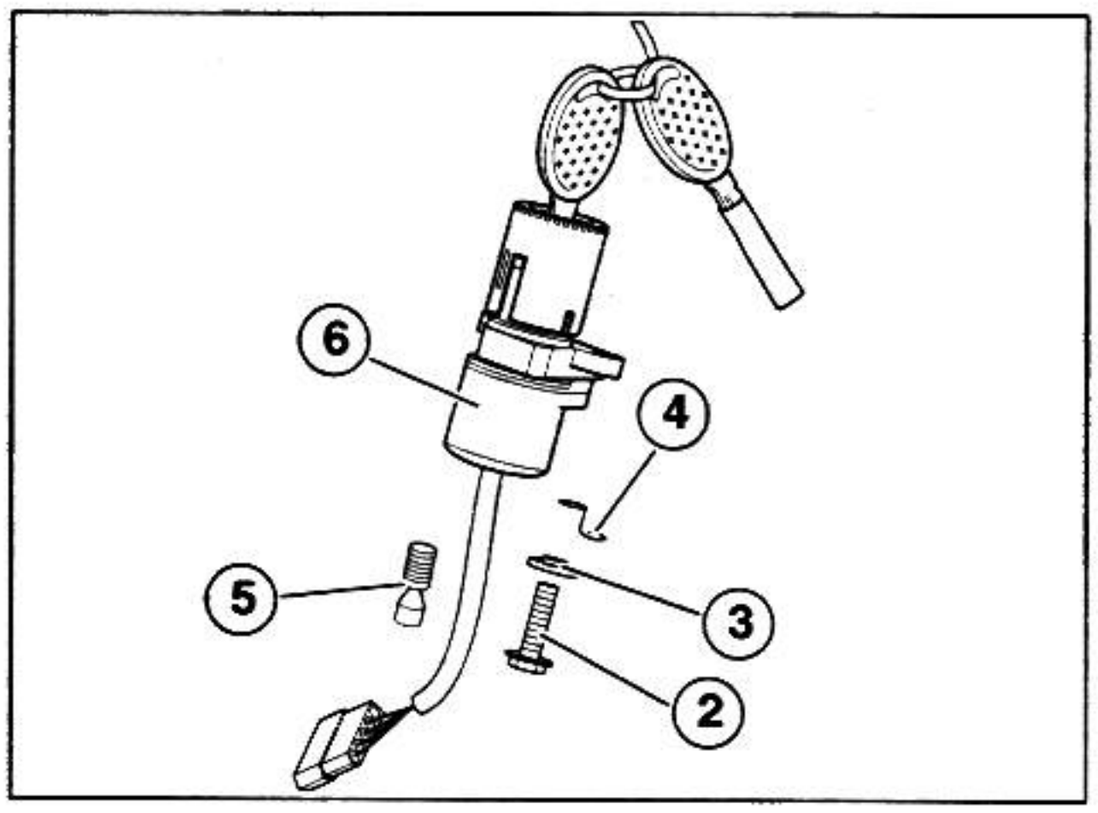

7.1.18 REMOVING THE LEFT HANDLEBAR

- Remove the knob, see 7.1.11 (REMOVING THE HANDGRIP FROM THE LEFT HANDLEBAR)).
- Remove the electrical control, see 7.1.13 (REMOVING ELECTRICAL CONTROLS ON THE LEFT HANDLEBAR).
- Remove the clutch control, see 7.1.12 (REMOVING THE CLUTCH CONTROL).
- Unscrew and remove the screw (1).

Tightening torque for screw (1): 8.8 ftlb (12 Nm).

- Loosen the screw (2).

Tightening torque for screw (2): 18 ftlb (25 Nm).

NOTE When reassembling, apply a little grease under the head of the screw (2).

- Slide the handlebar (3) from the fork.

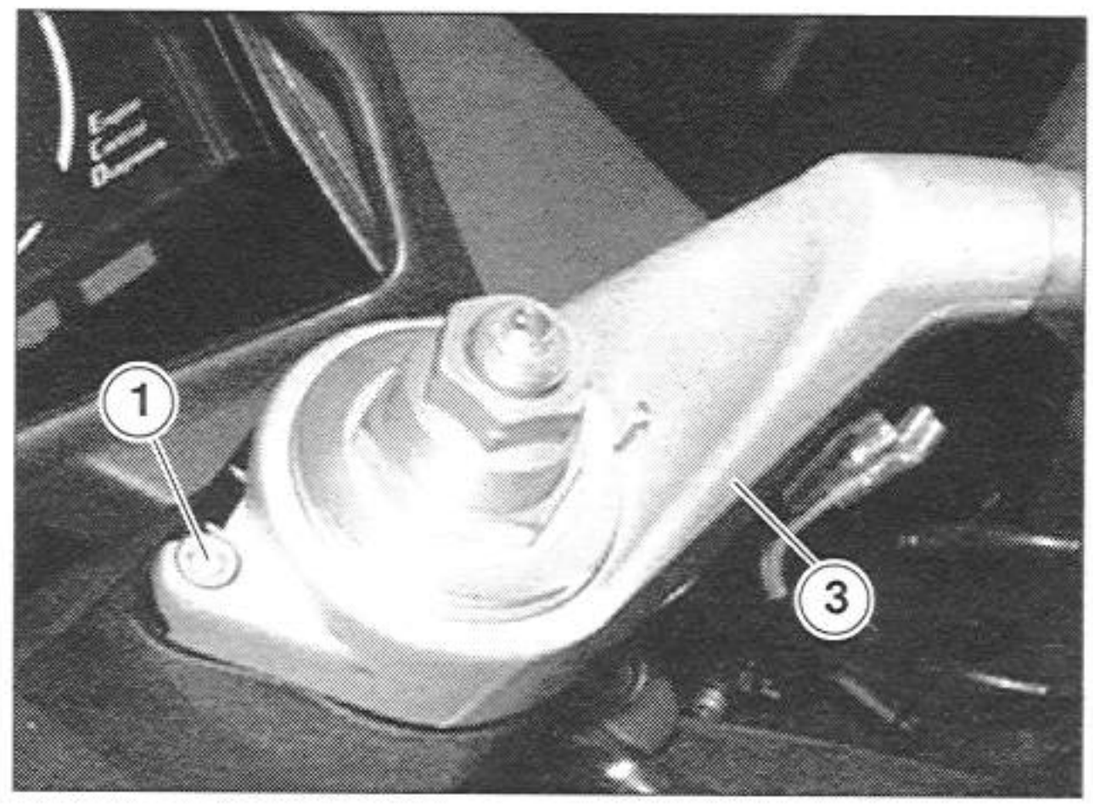

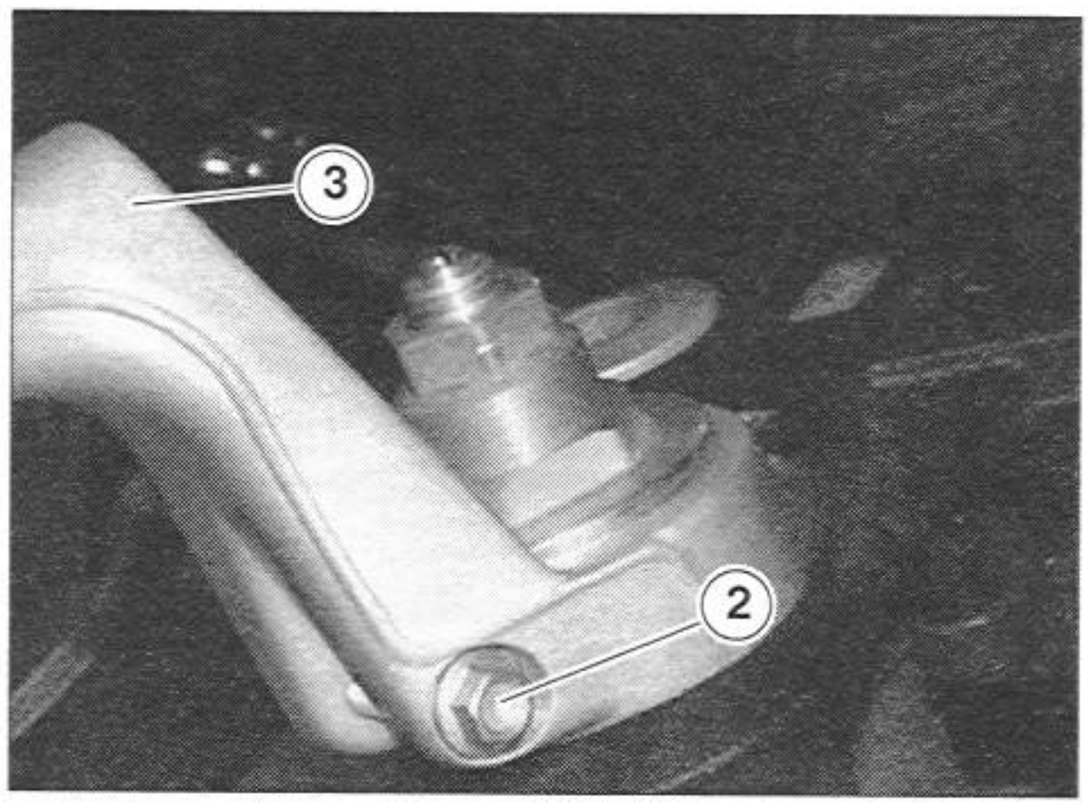

7.1.19 REMOVING THE RIGHT HANDLEBAR

- Remove the throttle control, see 7.1.14 (REMOVING THE THROTTLE CONTROL).
- Remove the brake control, see 7.1.15 (REMOVING THE FRONT BRAKE CONTROL).
- Carry out the last three steps described in paragraph 7.1.18 (REMOVING THE LEFT HANDLEBAR).

7.1.20 REMOVING THE FRONT FAIRING

- Place the vehicle on the center stand.
- Set the ignition switch to "⊗".
- ★ Unscrew and remove the two screws (1).

Tightening torque for screws (1): 2.2 ftlb (3 Nm).

- ★ Remove the bezel (2).

NOTE If the rubber (3) is damaged, replace it.

- ★ Unscrew and remove the two screws (4).

Tightening torque for screws (4): 2.2 ftlb (3 Nm).

- Remove the right dashboard panel (5).
- Raise the left dashboard panel (6) and disconnect the saddle fastener cable (7).
- Remove the left dashboard panel (6).
- Unscrew and remove the two screws (14).
- Remove the lower dashboard panel (15).
- Remove the dashboard, see 7.1.24 (REMOVING THE DASHBOARD).
- ★ Unscrew and remove the three screws (8), retrieving the three nuts.
- Slide the front fairing glass (9) out.
- Remove the upper dashboard molding, see 7.1.23 (REMOVING THE UPPER DASHBOARD MOLDING).

⚠ WARNING

Handle all plastic and painted components with care to avoid scraping or scratching them.

- Disconnect from the main wiring (10) the connectors for the headlight (11), front direction indicators (12), and air temperature sensor (13).

⚠ WARNING

When reassembling, make sure the electrical connectors (11-12-13) are fitted properly.

- Remove the entire front fairing, complete with headlight and rearview mirrors.
- Place the complete front fairing on a flat surface.

If necessary:

- Remove the headlight, see 7.1.22 (REMOVING THE HEADLIGHT).
- Remove the mirrors, see 7.1.21 (REMOVING THE MIRRORS).

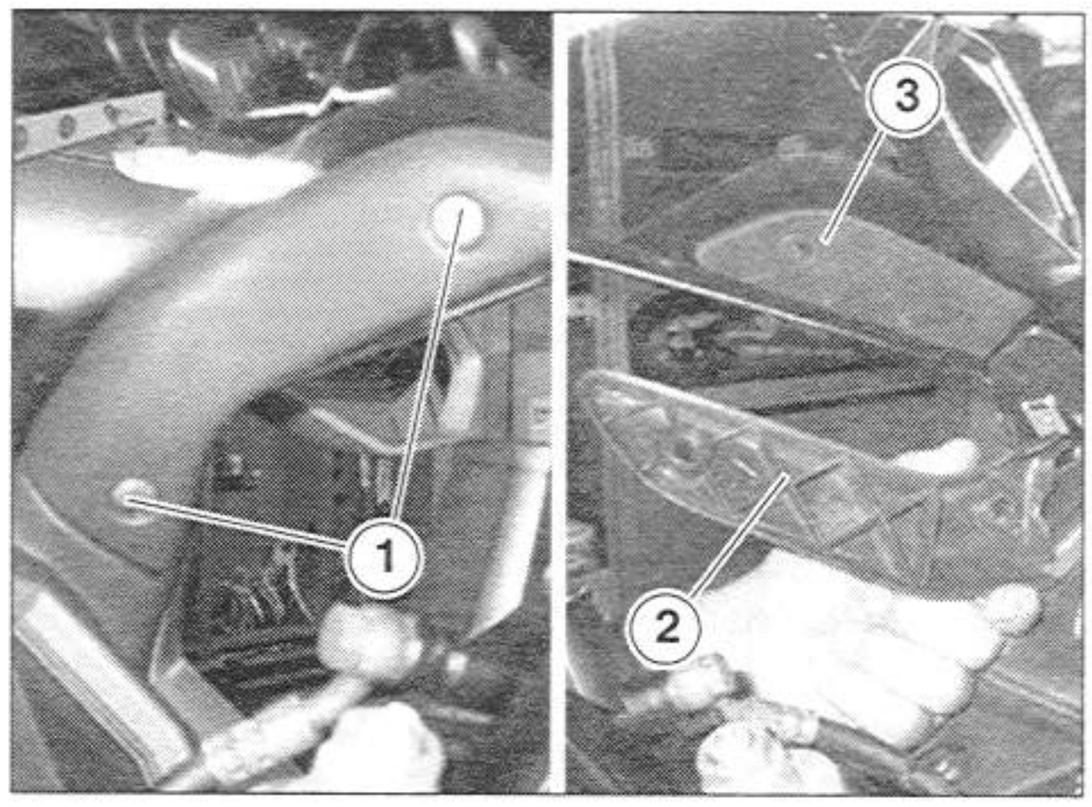

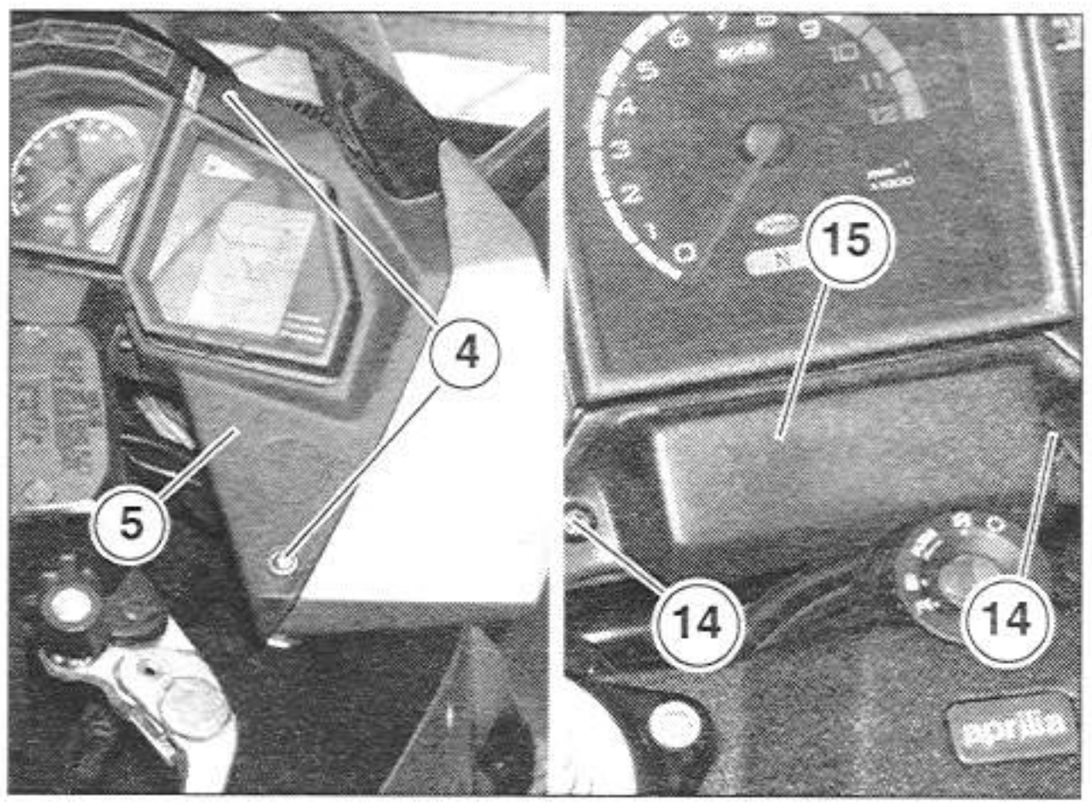

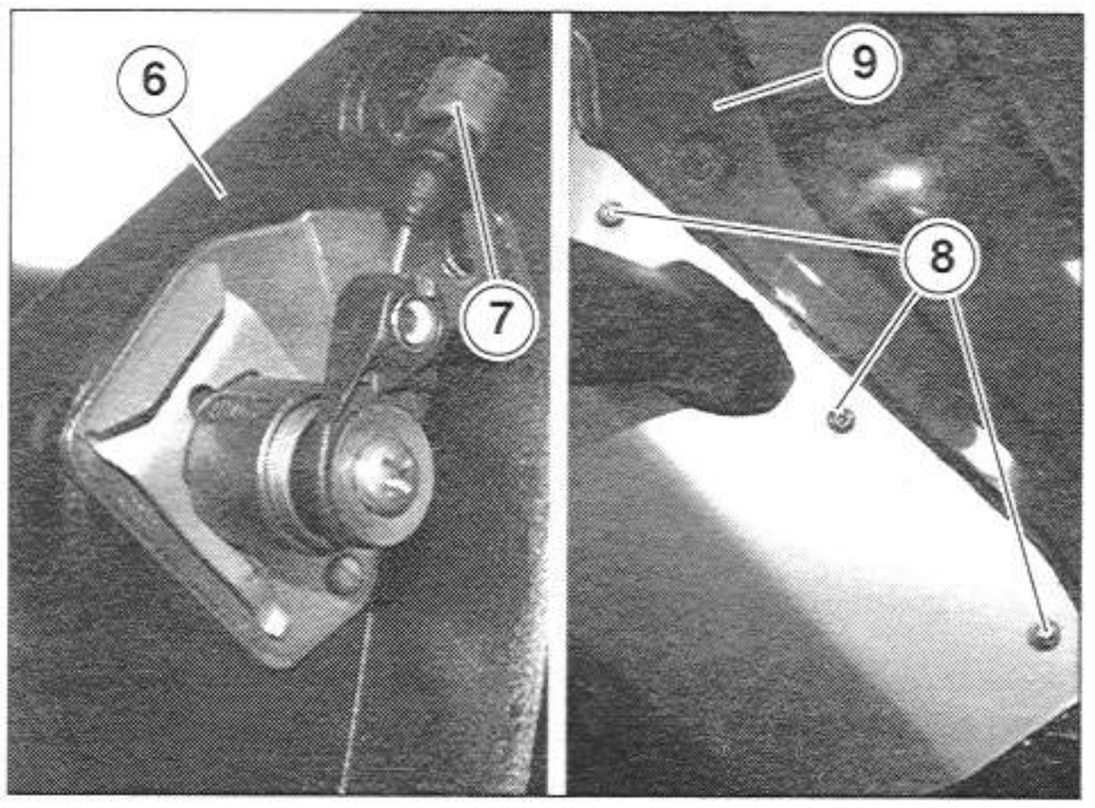

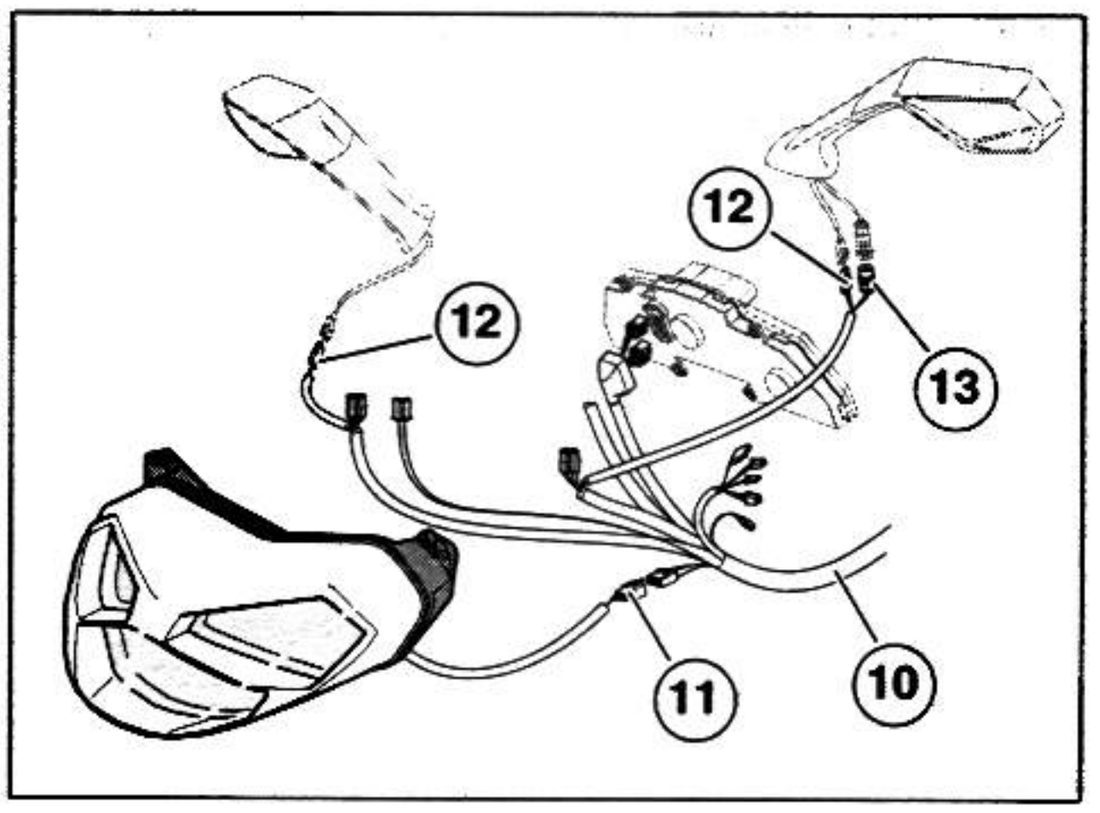

7.1.21 REMOVING THE MIRRORS

- Remove the right or left dashboard panel, depending on which mirror you wish to remove; see 7.1.20 (REMOVING THE FRONT FAIRING).

NOTE It is easier to remove the mirrors if you first remove the dashboard, see 7.1.24 (REMOVING THE DASHBOARD).

- Disconnect the electrical connector (1), front direction indicator.
- Disconnect the electrical connector (2), and air temperature sensor (only if you plan to remove the left mirror).

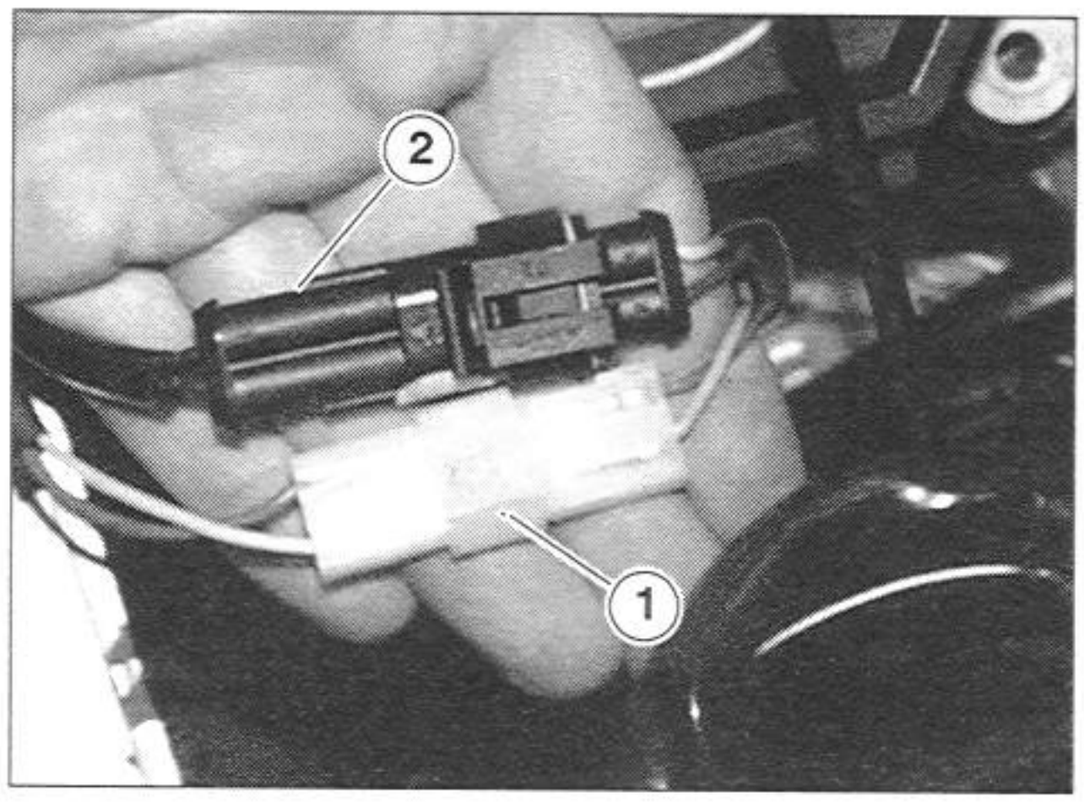

⚠ WARNING

When reassembling, make sure the electrical connectors (1-2) are fitted properly.
Handle all plastic and painted components with care to avoid scraping or scratching them.

- Unscrew and remove the two nuts (3).
- Remove the mirror, pulling the wiring through the slot (4).
- Retrieve the gasket (5).

NOTE If necessary, repeat the above steps to remove the other rearview mirror.

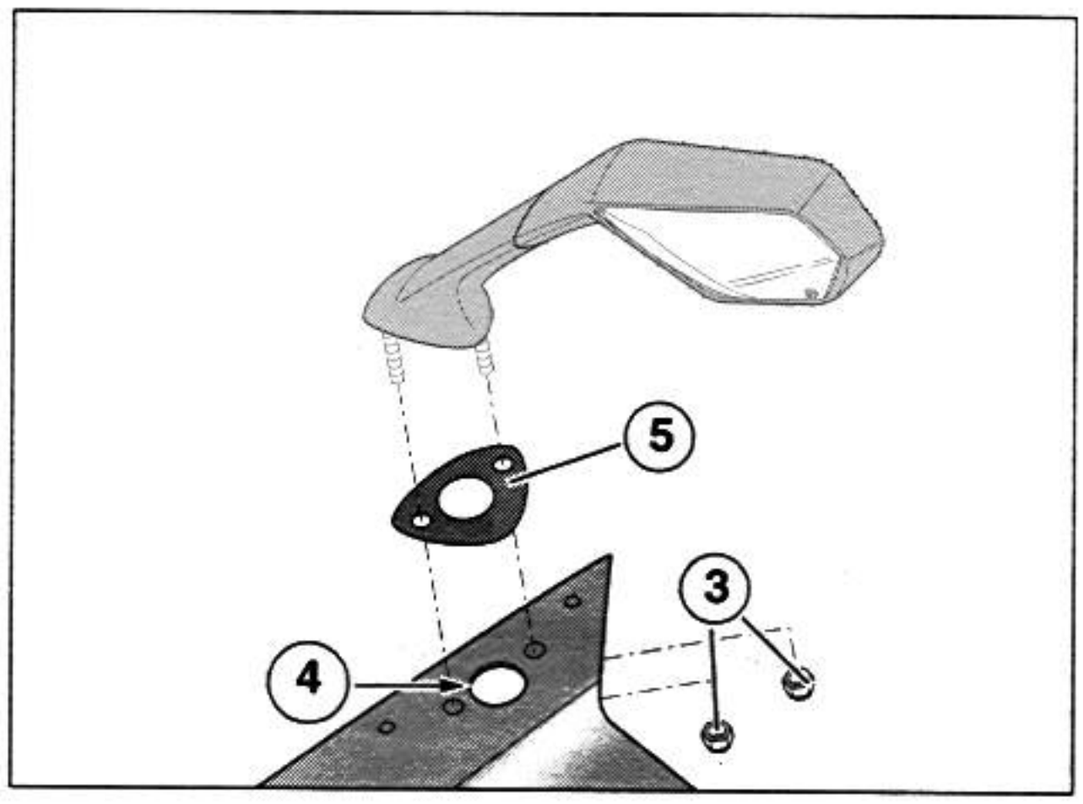

⚠ WARNING

After reassembly, adjust the rearview mirrors as needed and tighten the nuts (3) to ensure their stability.

7.1.22 REMOVING THE HEADLIGHT

Carefully read 1.3.9 (PRECAUTIONS AND GENERAL INFORMATION).

- Place the vehicle on the center stand.
- Remove the front fairing, 7.1.20 (REMOVING THE FRONT FAIRING).
- Unscrew and remove the four screws (2), saving the washers.

Tightening torque for screws (2): 1.4 ftlb (2 Nm).

- Remove the headlight (1) complete with half-housings, and place it on a flat surface.

NOTE If necessary, unscrew and remove the two screws supporting the two half-housings of the front fairing.

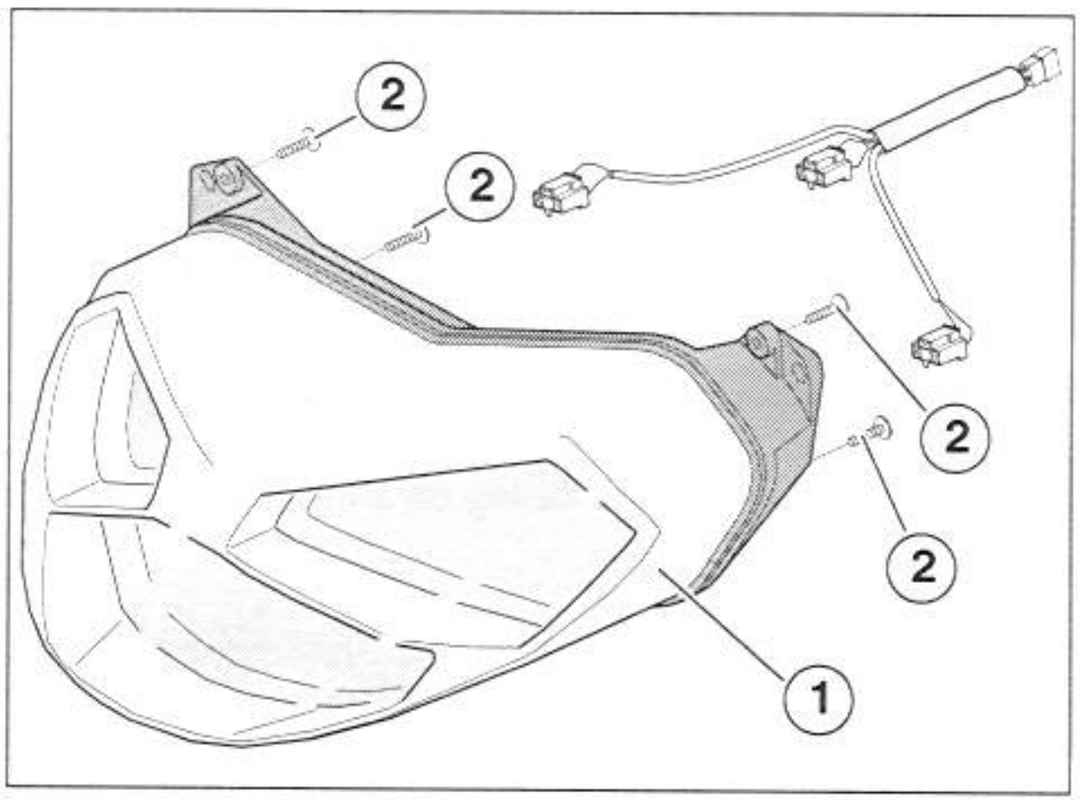

7.1.23 REMOVING THE UPPER DASHBOARD MOLDING

- Remove the front fairing glass, see 7.1.20 (REMOVING THE FRONT FAIRING).
- Unscrew and remove the two fastening screws (1).

Tightening torque for screws (1): 2.9 ftlb (4 Nm).

- Remove the molding (2) by sliding it out from behind.

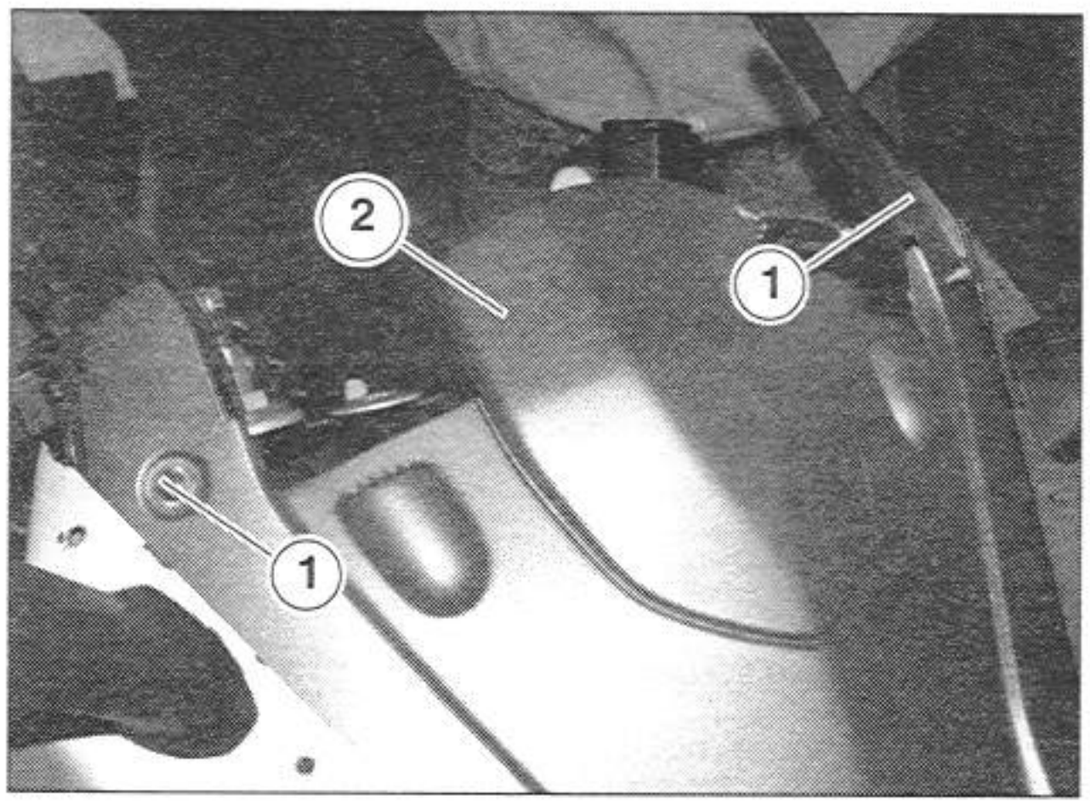

7.1.24 REMOVING THE DASHBOARD

Carefully read 0.5.1 (PRECAUTIONS AND GENERAL INFORMATION).

- Remove the dashboard panels, see 7.1.20 (REMOVING THE FRONT FAIRING).
- Unscrew and remove the two screws (2), retrieving the two bushings and the anti-vibration grommets.

Tightening torque for screws (2): 2.9 ftlb (4 Nm).

⚠ WARNING

Replace the grommets if damaged.

- Move the dashboard (3) out of the way.
- Slip the boot off the connectors (1), and disconnect the latter from the dashboard (3).

⚠ WARNING

When reassembling, make sure the electrical connectors (1) are fitted together properly.

- Remove the dashboard (3).

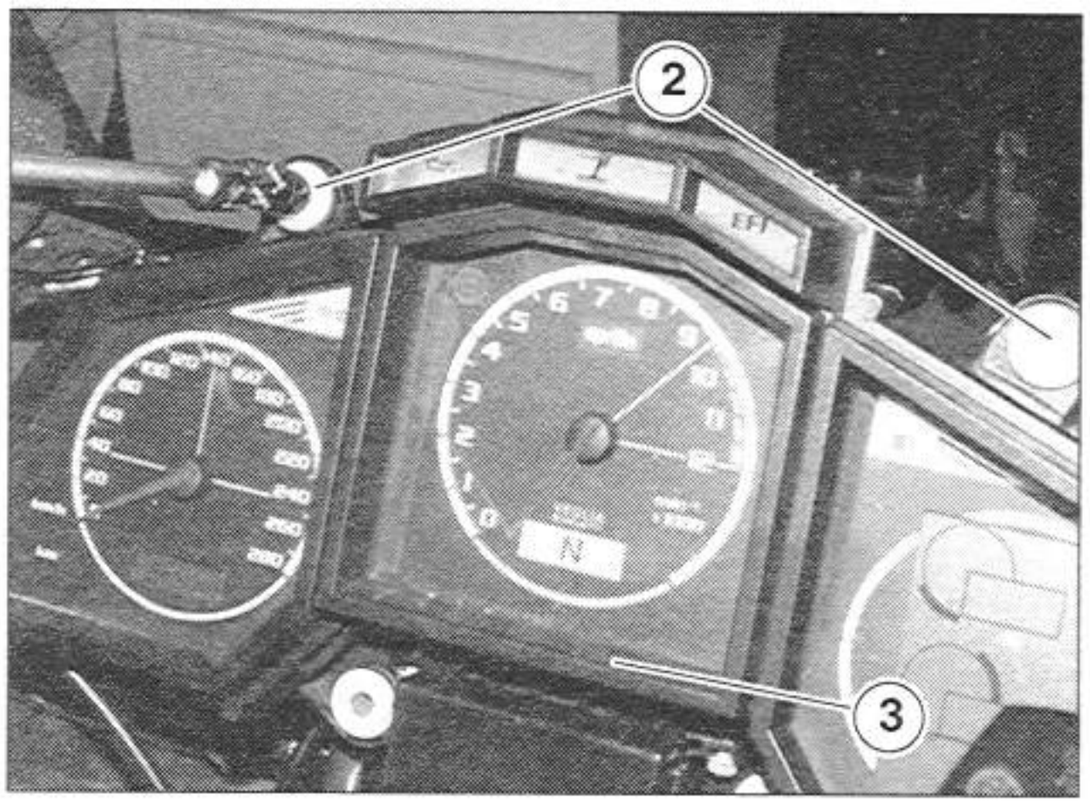

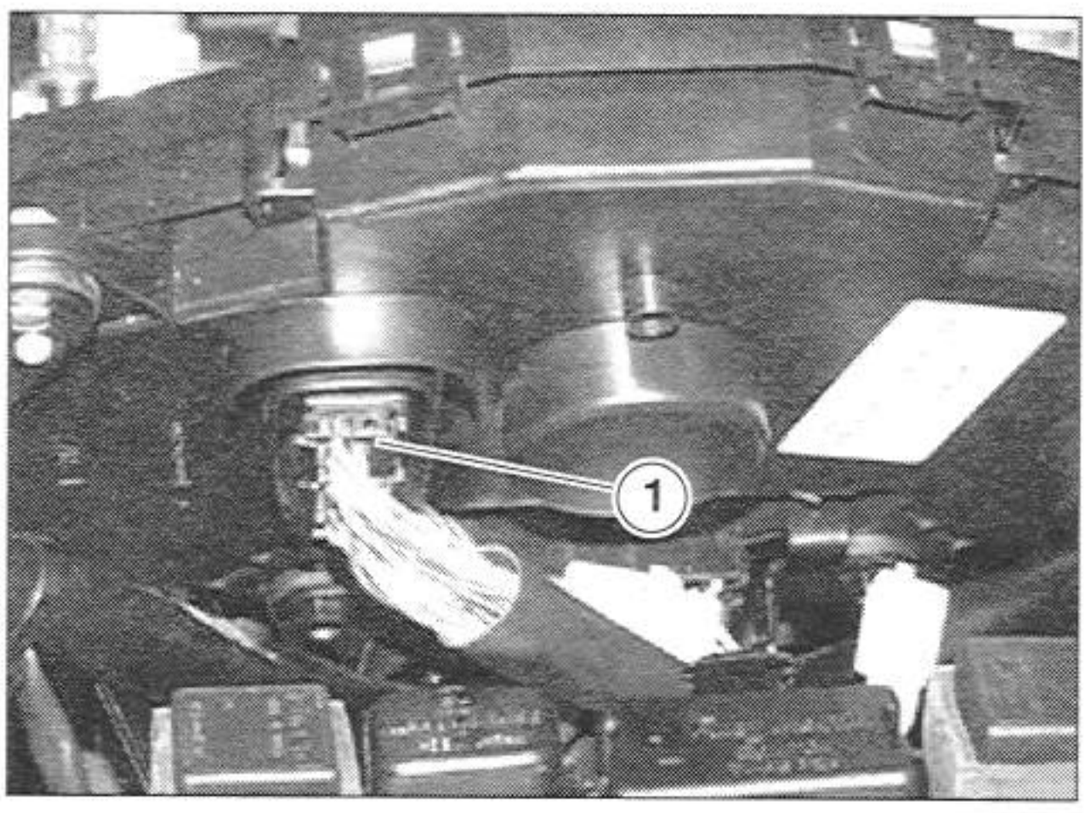

7.1.25 REMOVING THE DASHBOARD/FRONT FAIRING MOUNT

Carefully read 1.3.9 (PRECAUTIONS AND GENERAL INFORMATION).

- Remove both side fairings, see 7.1.28 (REMOVING THE SIDE FAIRINGS).
- Remove the front fairing, see 7.1.20 (REMOVING THE FRONT FAIRING).
- Unscrew and remove the two screws (1), saving the two nuts.

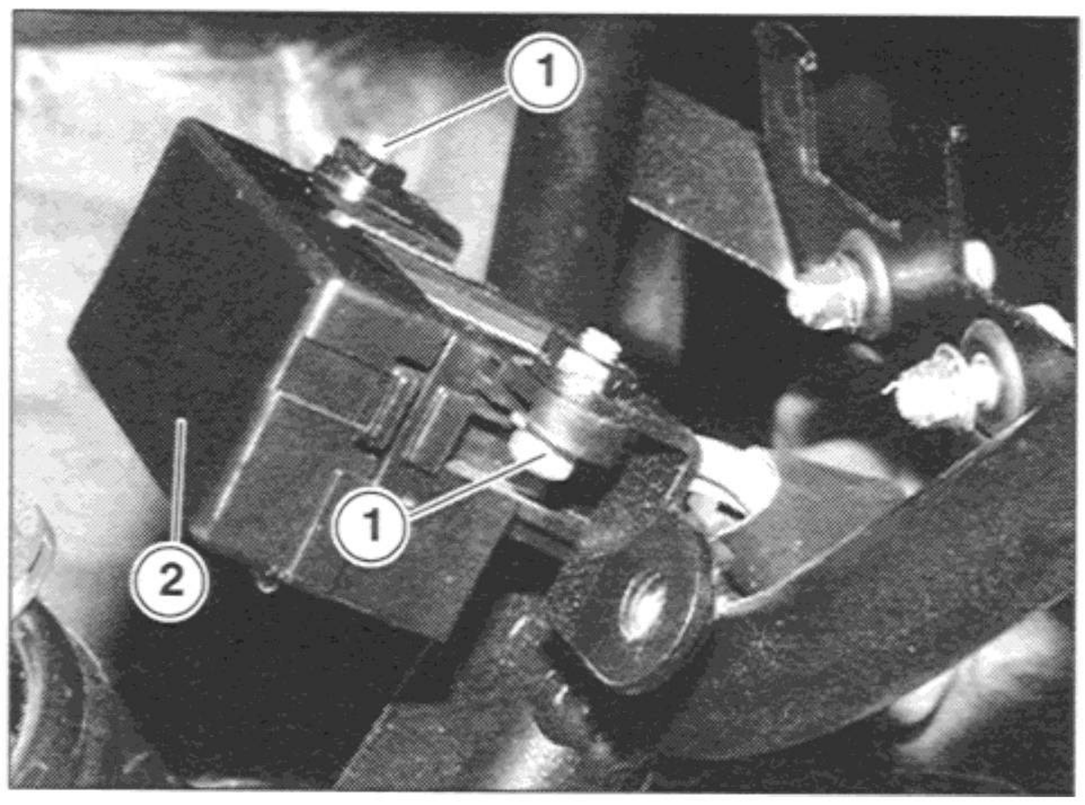

Tightening torque for screws (1): 1.4 ftlb (2 Nm).

- Remove the fuse box (2).
- Uncouple the two light relays (3), flasher (4) and the overturn sensor (5), leaving them connected to the wiring.

WARNING

Replace the grommets if damaged.

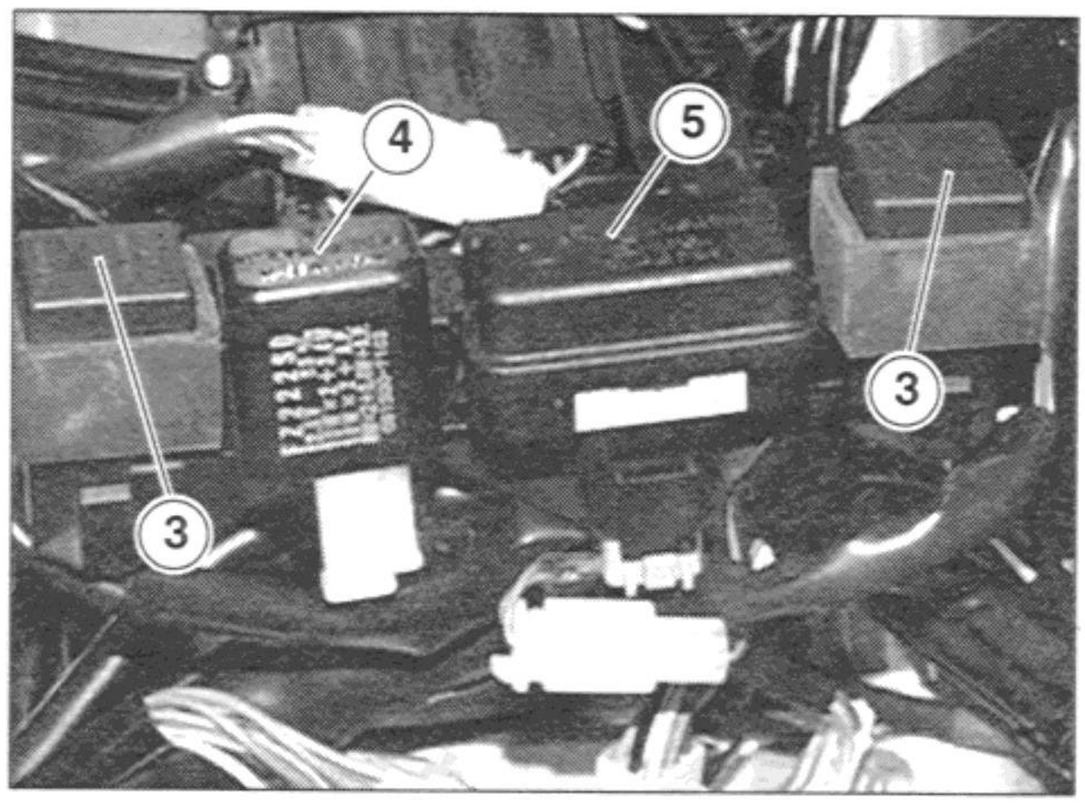

- Unscrew and remove the two nuts (7).

Tightening torque for nuts (7): 7.3 ftlb (10 Nm).

- Remove the two screws (8).

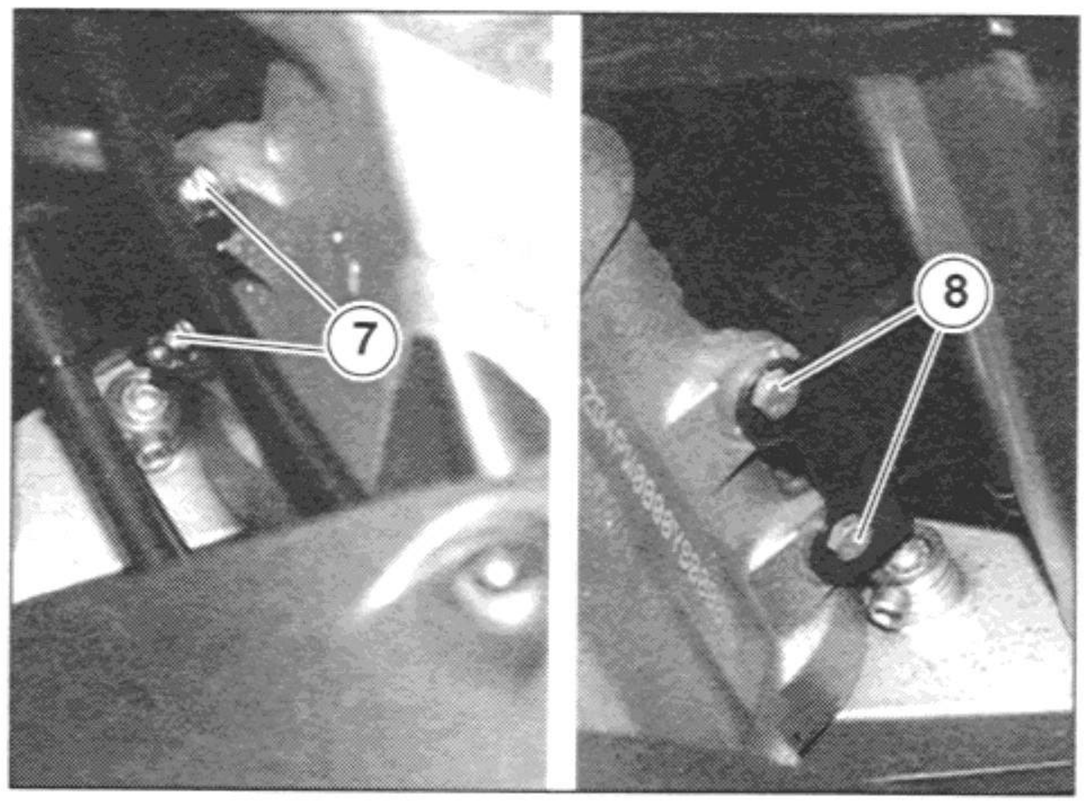

- Remove the dashboard/front fairing mount (6).

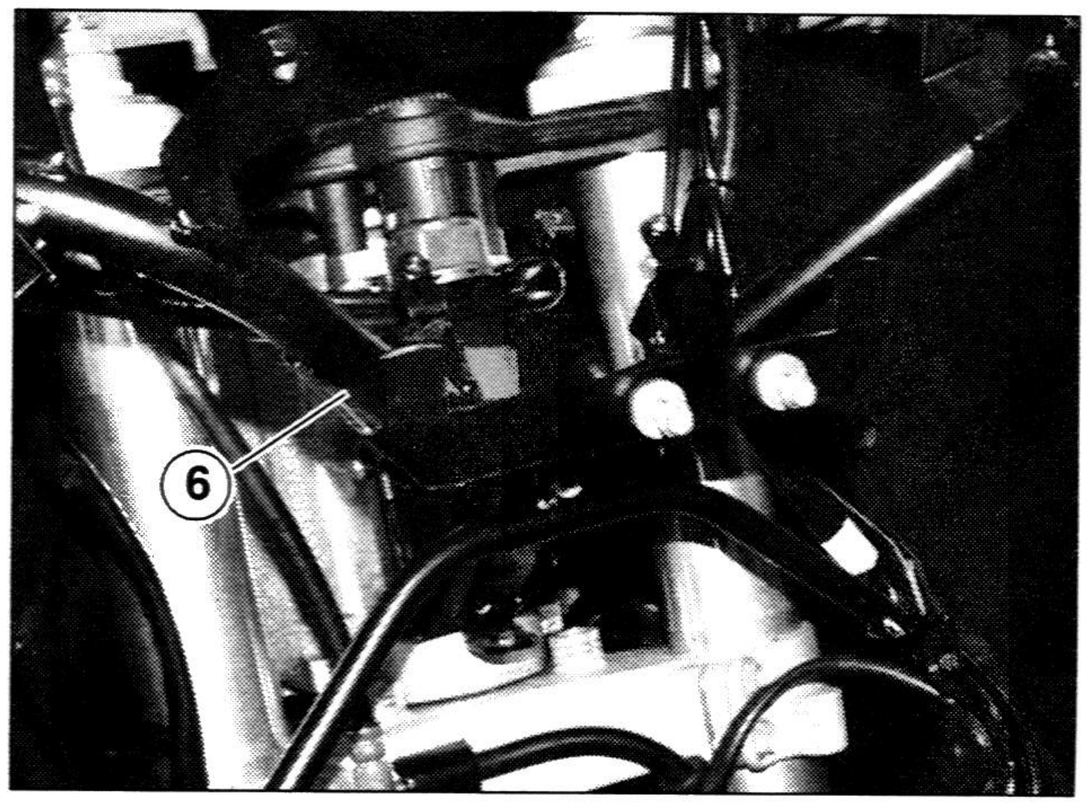

7.1.26 REMOVING THE FRONT MUDGUARD

Carefully read 1.3.9 (PRECAUTIONS AND GENERAL INFORMATION).

- Place the vehicle on the center stand.
- ★ Unscrew and remove the two screws (1).

Tightening torque for screws (1): 3.6 ftlb (5 Nm).

⚠ WARNING

Handle all plastic and painted components with care to avoid scraping or scratching them.

- Pull the mudguard (2) out from the front.

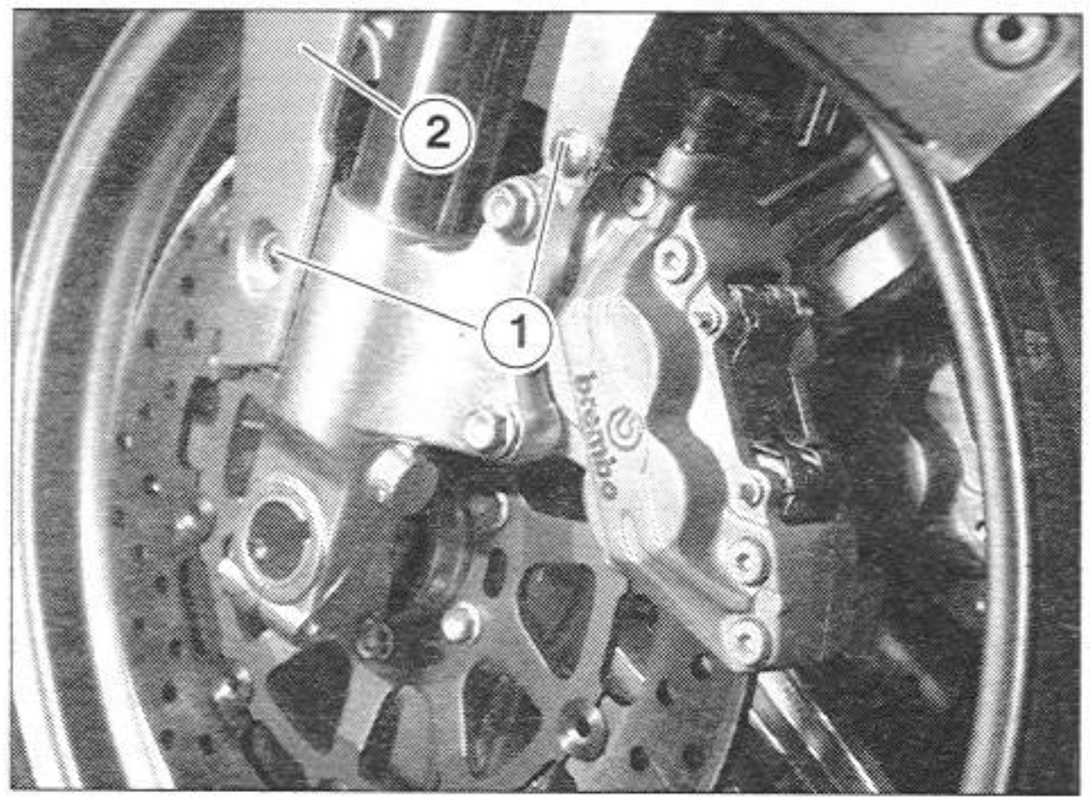

7.1.27 REMOVING THE HORN

- Place the vehicle on the stand.
- Remove the radiator spoiler, see 7.1.35 (REMOVING THE RADIATOR SPOILER).
- Disconnect the two horn connectors (1).

⚠ WARNING

When reassembling, make sure the two connectors (1) are fitted together properly.

- To remove the horn (3) complete with bracket, unscrew and remove the two screws (2)

Tightening torque for screws (2): 18 ftlb (25 Nm).

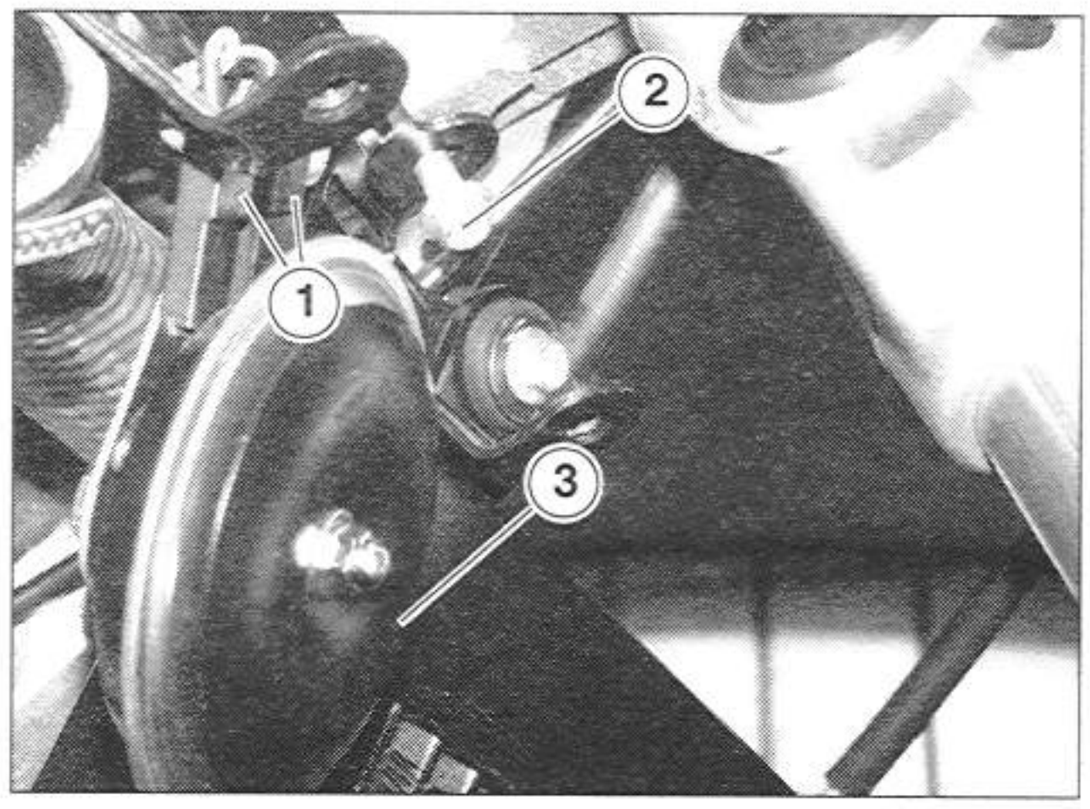

7.1.28 REMOVING THE SIDE FAIRINGS

⚠ WARNING

Wait until the engine and exhaust silencer have completely cooled down.

- Place the vehicle on the center stand.
- Unscrew and remove the three inner screws (1).

Tightening torque for screws (1): 3.6 ftlb (5 Nm).

- Unscrew and remove the five upper screws (2).

Tightening torque for screws (2): 2.2 ftlb (3 Nm).

- Unscrew and remove the four lower screws (3).

Tightening torque for screws (3): 1.4 ftlb (2 Nm).

⚠ WARNING

Handle all plastic and painted components with care to avoid scraping or scratching them.

- Remove the side fairing (4).

⚠ WARNING

Replace the internal soundproofing panel if damaged.

NOTE If necessary, repeat the above steps to remove the other side fairing.

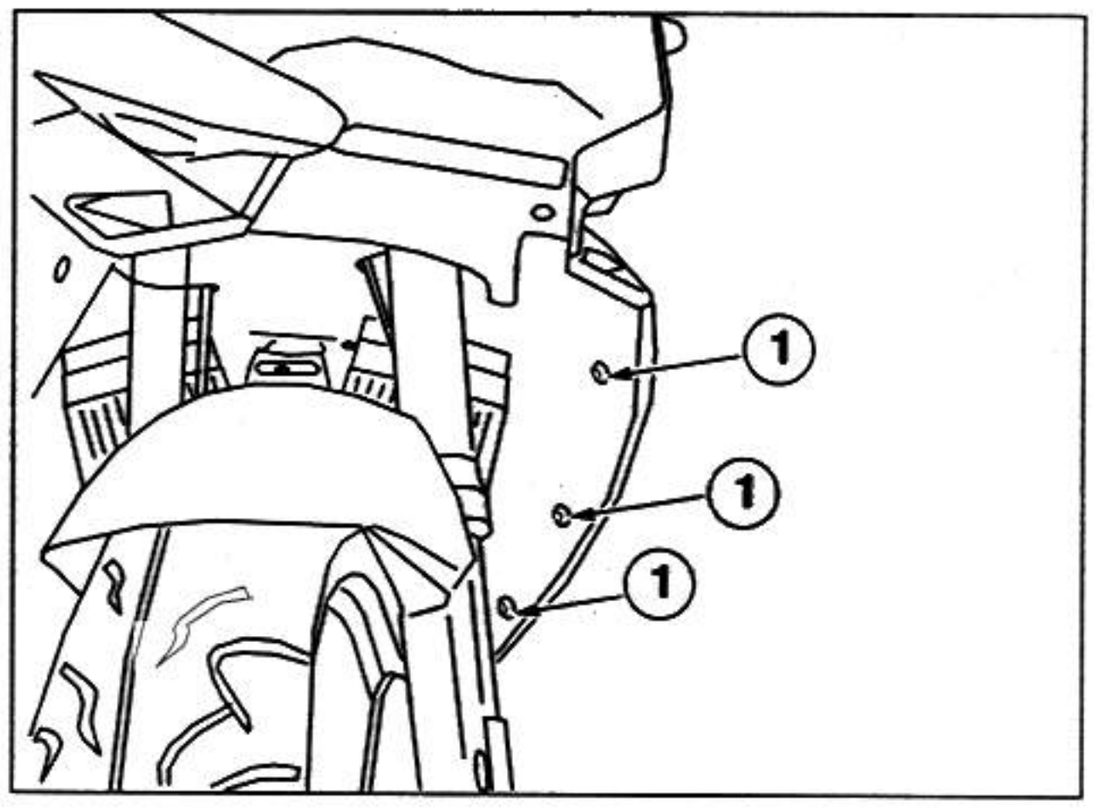

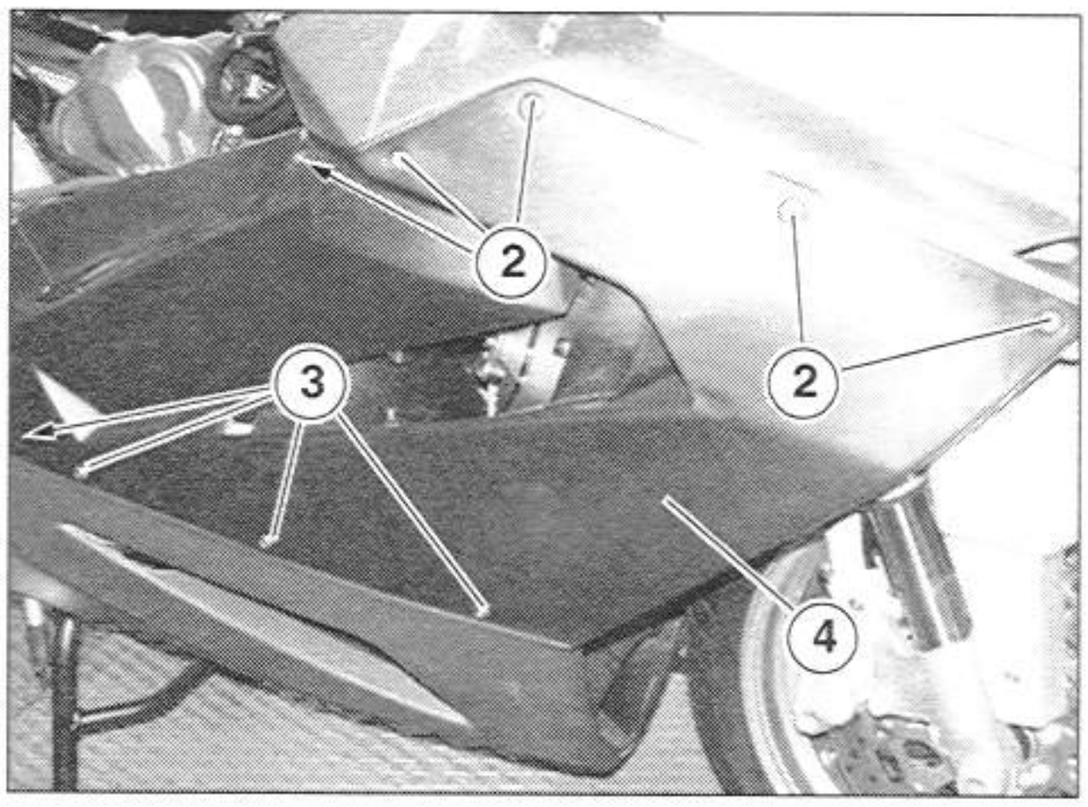

7.1.29 REMOVING THE FRONT DIRECTION INDICATORS

- If you need to replace the front direction indicator, proceed by removing the mirror, see 7.1.21 (REMOVING THE MIRRORS).
- If you only need to replace the lens (2): - unscrew and remove the screw (1).
- If you need to remove the reflector (1): - follow the instructions above; - remove the bulb, see 6.15.2 (REPLACING THE FRONT DIRECTION INDICATOR LAMPS);

- remove the reflector.

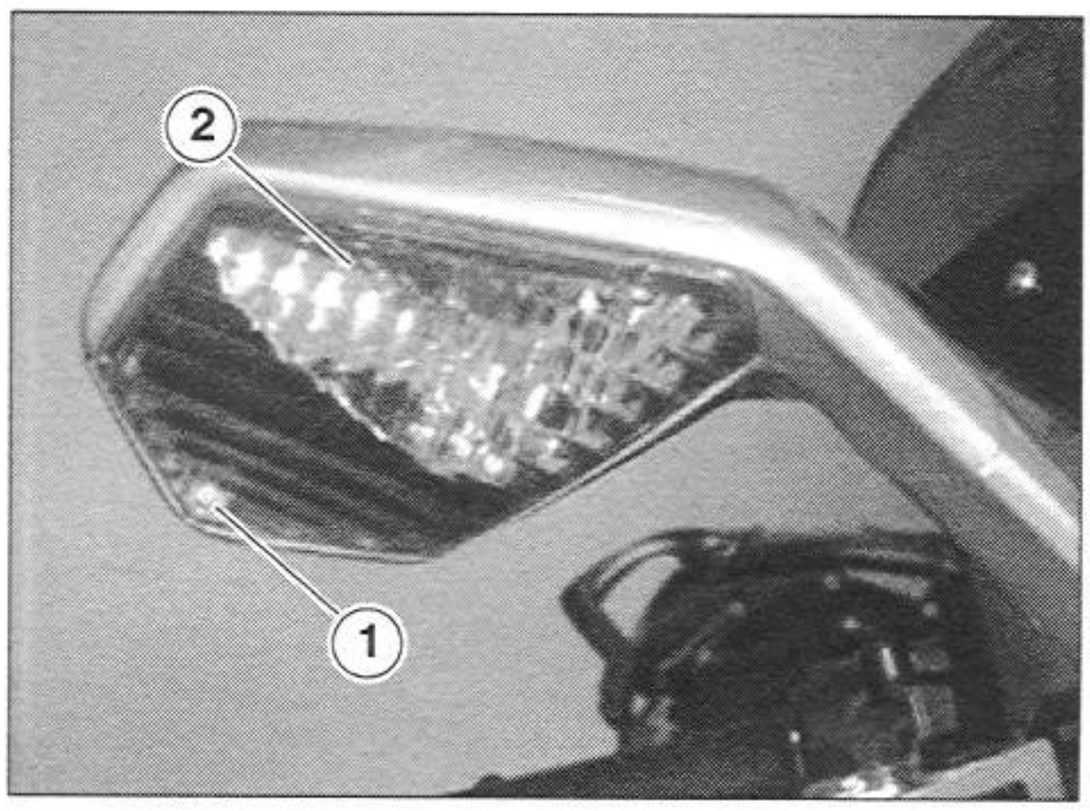

7.1.30 REMOVING THE LEFT AIR DUCT

Carefully read 1.3.9 (PRECAUTIONS AND GENERAL INFORMATION).

- Place the vehicle on the center stand.
- Set the ignition switch to "⊗".
- Remove the side fairing, see 7.1.28 (REMOVING THE SIDE FAIRINGS).
- Remove the headlight complete with half-housings, see 7.1.22 (REMOVING THE HEADLIGHT).
- Disconnect the electrical connector (1) from the air thermistor.

⚠ WARNING

When reassembling, make sure the connector (1) is fitted properly.

- Unscrew and remove the ten screws (2).

Tightening torque for screws (2): 1.4 ftlb (2 Nm).

- Unscrew and remove the screw (3), saving the washer.

Tightening torque for screws (3): 7.3 ftlb (10 Nm).

- Partially remove the control unit case (4), and retrieve the bushing if it slips out.
- Remove the left air duct (5) from the insert.

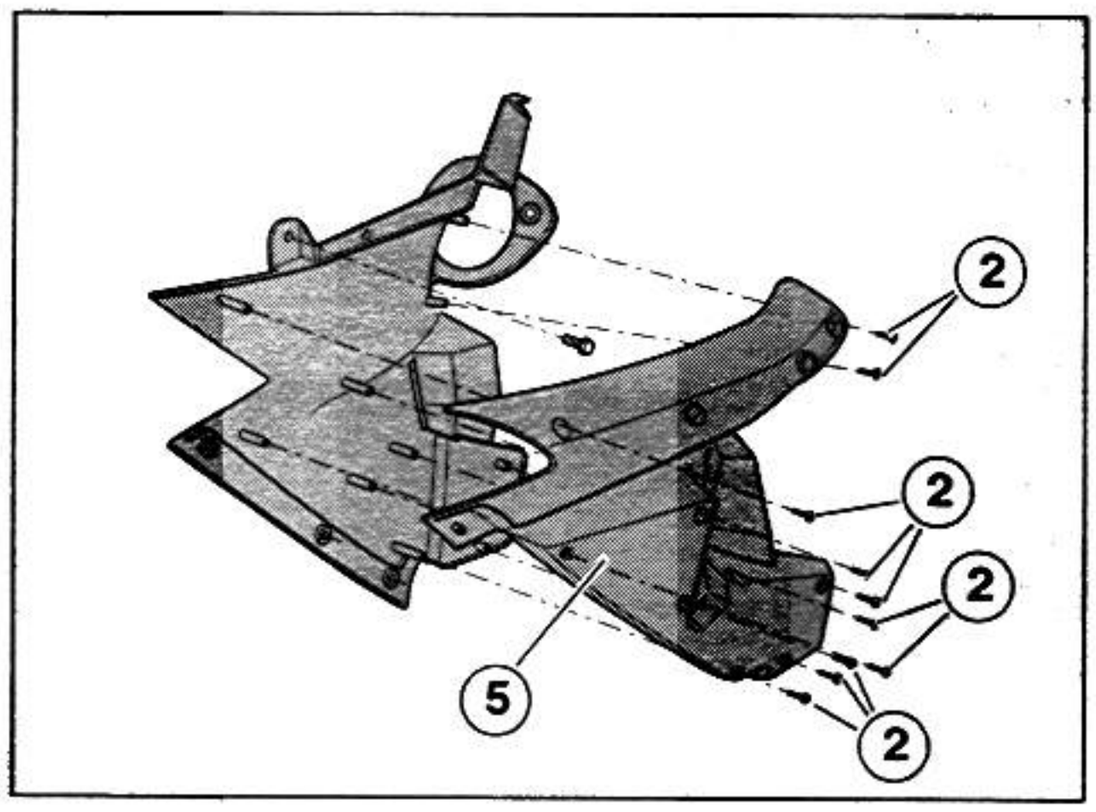

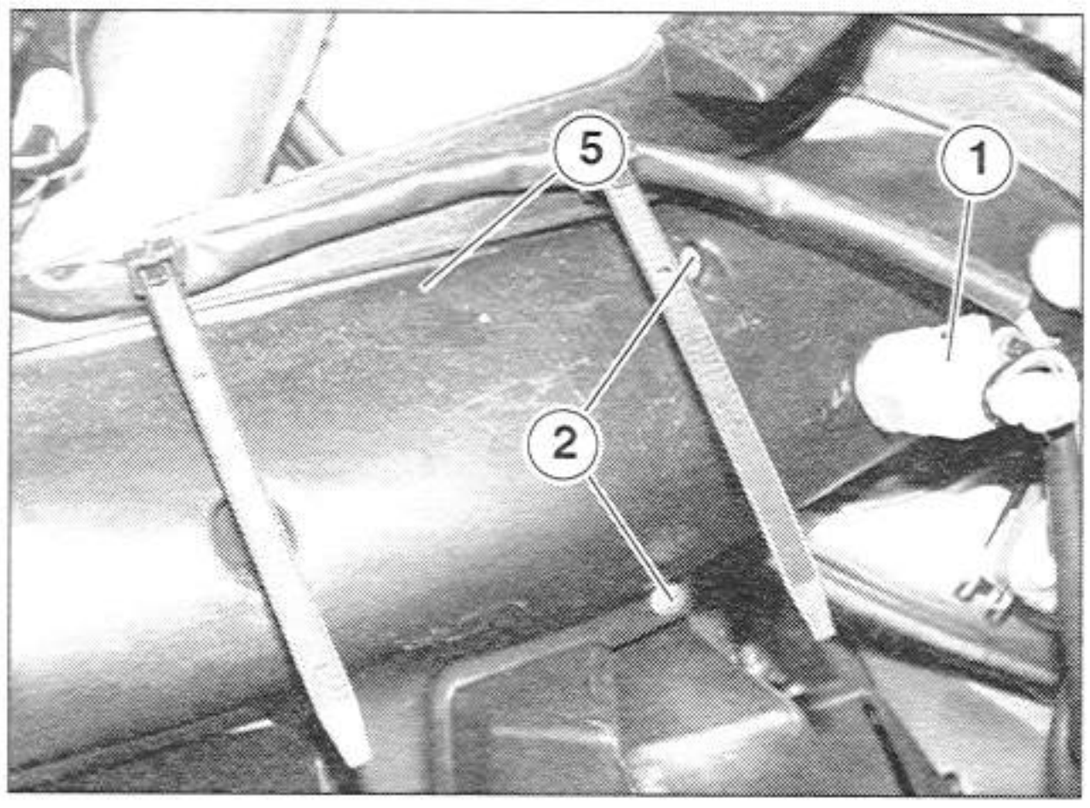

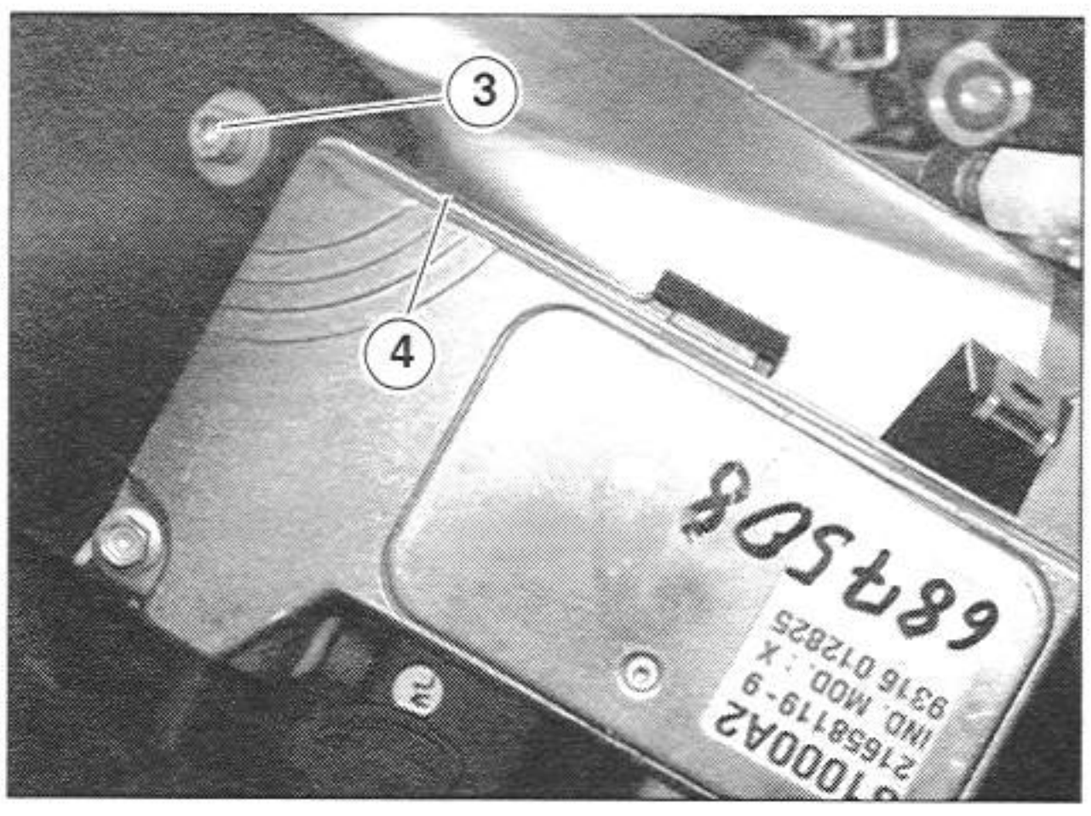

7.1.31 REMOVING THE RIGHT AIR DUCT

- Carry out the first three steps described in the paragraph 7.1.30 (REMOVING THE LEFT AIR DUCT).
- Unscrew and remove the ten screws (1).

Tightening torque for screws (1): 1.4 ftlb (2 Nm).

- Unscrew and remove the screw (2).

Tightening torque for screws (2): 3.6 ftlb (5 Nm).

- Remove the right air duct (3).

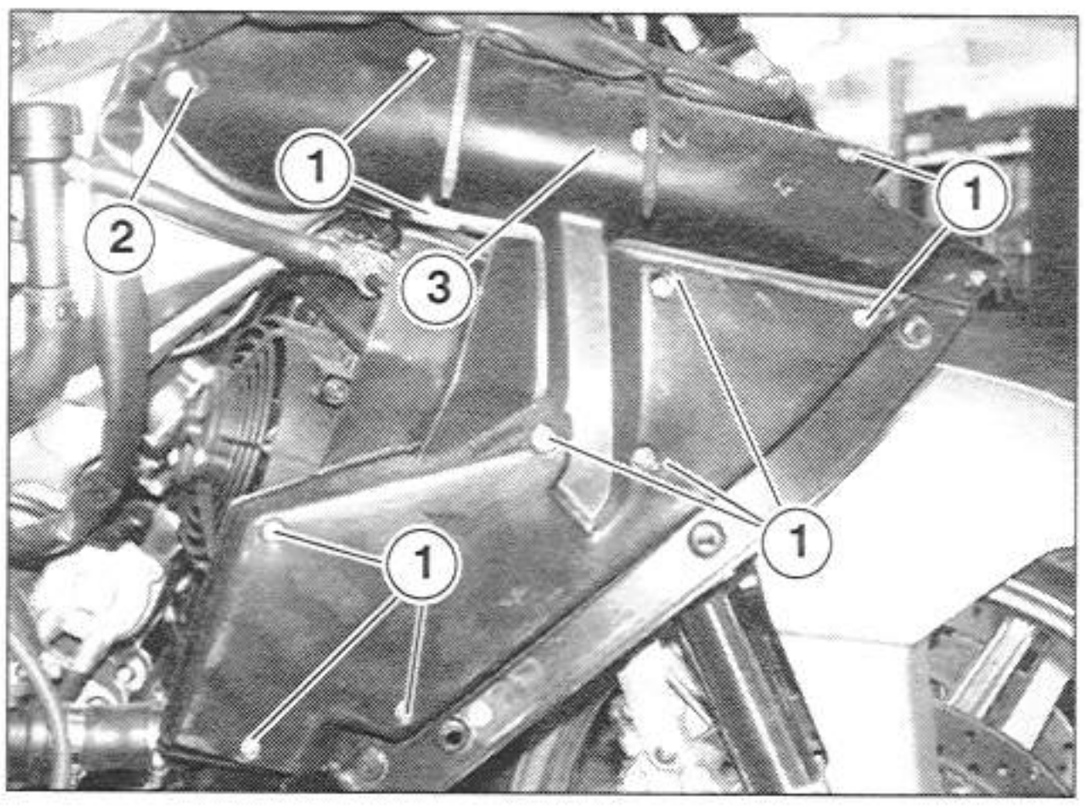

7.1.32 REMOVING THE FRONT FAIRING LOWER LOCKUP

Carefully read 1.3.9 (PRECAUTIONS AND GENERAL INFORMATION).

- Place the vehicle on the center stand.
- Unscrew and remove the three screws (1).

Tightening torque for screws (1): 3.6 ftlb (5 Nm).

⚠ WARNING

Be very careful to avoid damaging the brake lines. Nudge the front fairing lower lockup (1) until you find the best position for sliding it out.

- Remove the front fairing lower lockup (2).

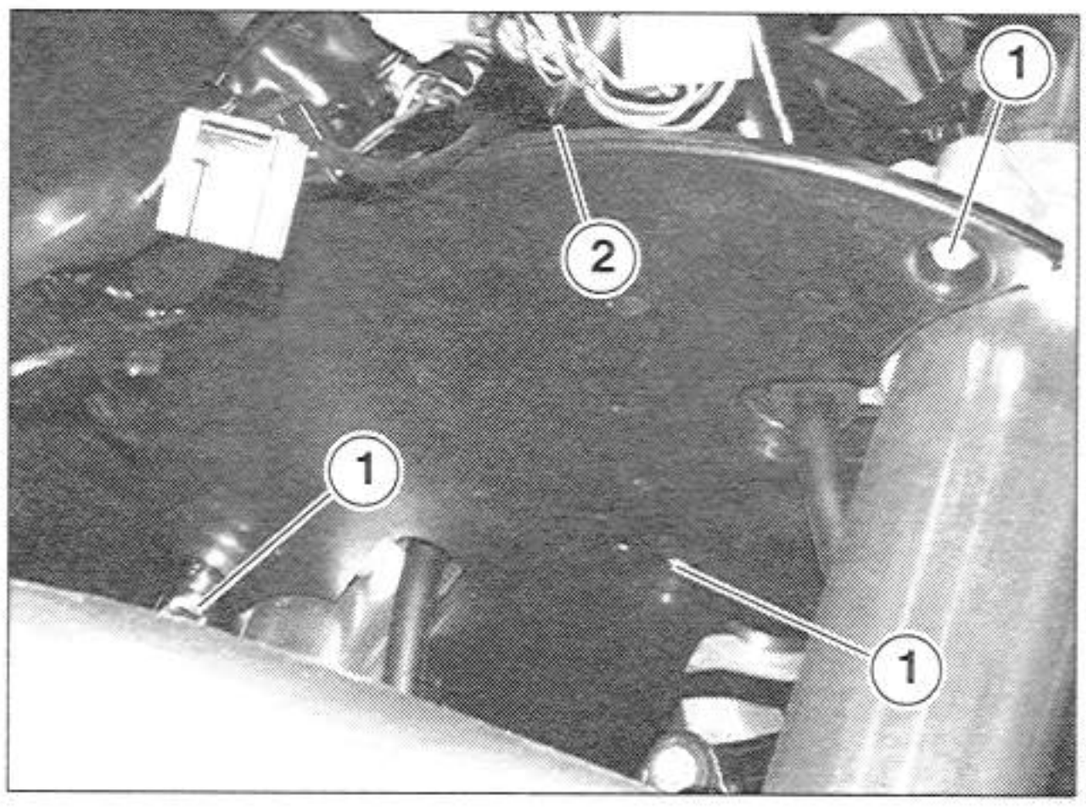

7.1.33 REMOVING THE LOWER FAIRING

Carefully read 1.3.9 (PRECAUTIONS AND GENERAL INFORMATION).

- Place the vehicle on the center stand.

⚠ DANGER

Wait until the engine and exhaust silencer have completely cooled down.

- Remove the side fairing from the side in question, see 7.1.28 (REMOVING THE SIDE FAIRINGS).
- Unscrew and remove the two lower screws (1).

Tightening torque for screws (1): 2.9 ftlb (4 Nm).

- Unscrew and remove the screw (5).
- Unscrew and remove the rear screw (2), saving the bushing.

⚠ WARNING

When reassembling, make sure the bushing is fitted properly.

Tightening torque for screws (2): 2.9 ftlb (4 Nm).

- Unscrew and remove the screw (3).

Tightening torque for screws (3): 1.4 ftlb (2 Nm).

- Unscrew and remove the screw (6).

Tightening torque for screw (6): 2.9 ftlb (4 Nm).

⚠ WARNING

Handle all plastic and painted components with care to avoid scraping or scratching them.

- Remove the lower fairing (4) complete with guard (7).

NOTE If necessary, repeat the above steps to remove the other lower fairing.

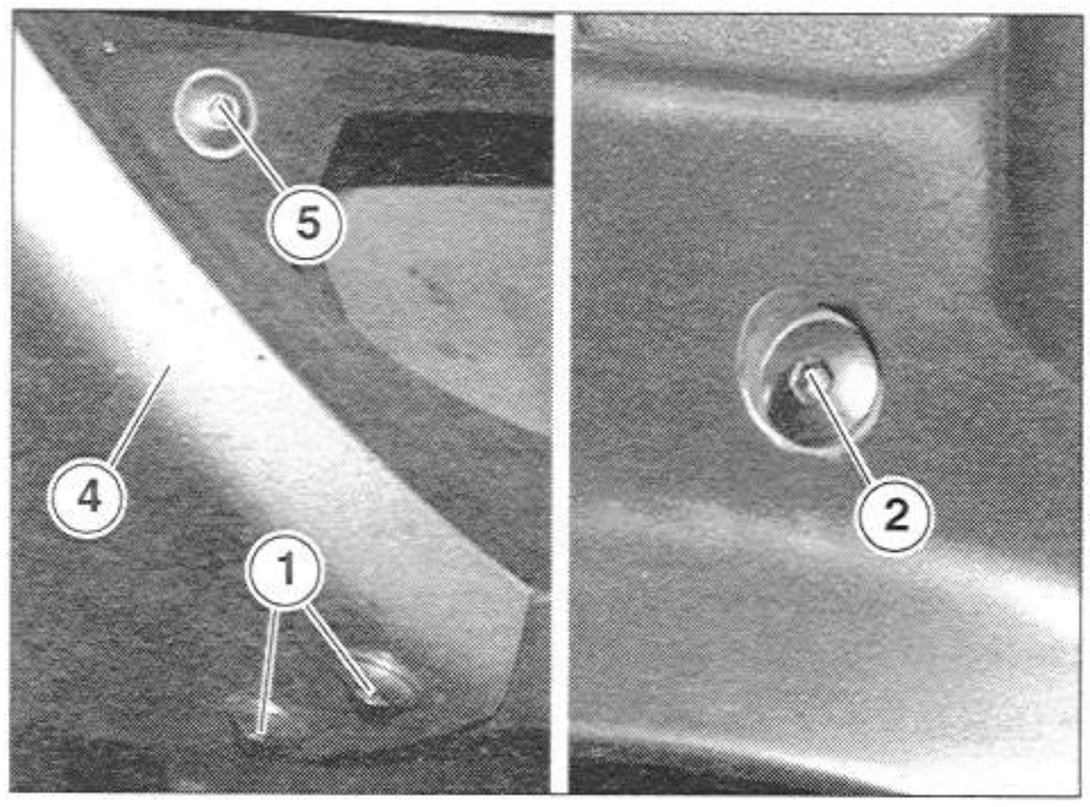

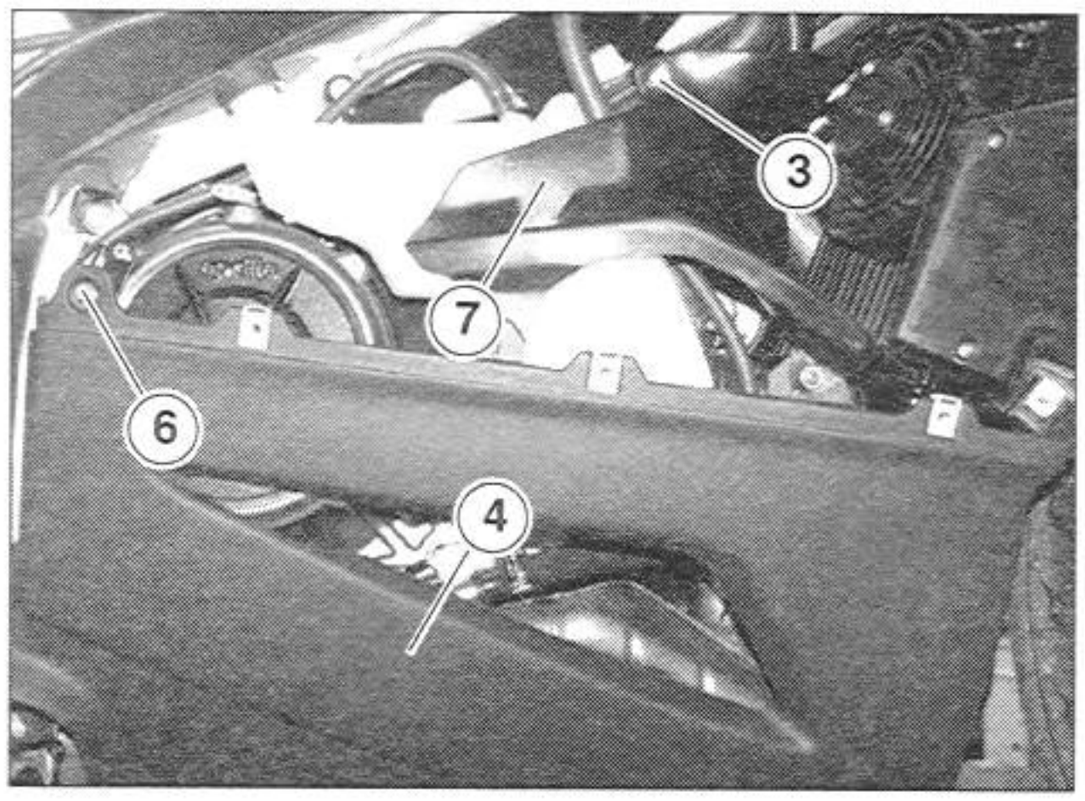

7.1.34 REMOVING THE AIR INLET DUCT CASES

Carefully read 1.3.9 (PRECAUTIONS AND GENERAL INFORMATION).

- Remove the air duct on the side in question,see 7.1.30 (REMOVING THE LEFT AIR DUCT), or see 7.1.31 (REMOVING THE RIGHT AIR DUCT).
- Open the two clamps (1) that fasten the electrical cable (2) to the air inlet duct case (3).

⚠ WARNING

When reassembling make sure the cable is properly placed in its collar.

- Unscrew and remove the two screws (4).

Tightening torque for screws (4): 3.6 ftlb (5 Nm).

- Remove the air inlet duct case (3).

NOTE If necessary, repeat the above steps to remove the other air inlet duct case.

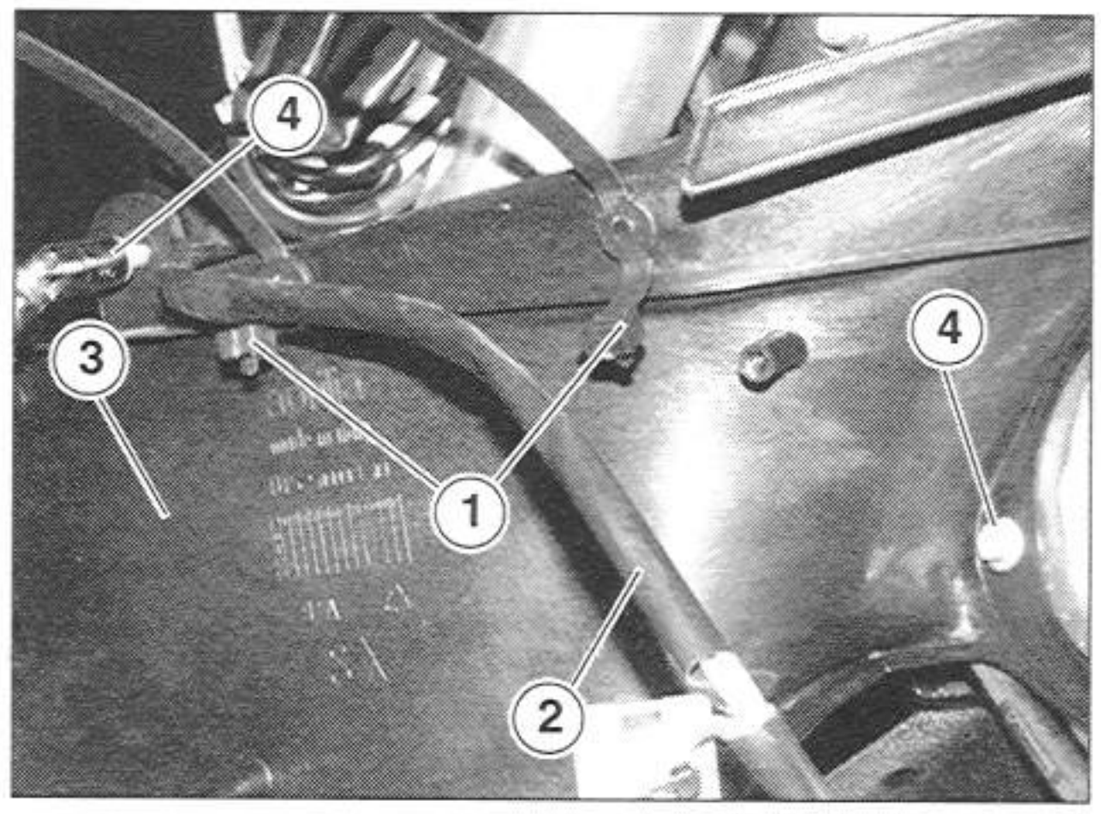

7.1.35 REMOVING THE RADIATOR SPOILER

Carefully read 1.3.9 (PRECAUTIONS AND GENERAL INFORMATION).

- Place the vehicle on the center stand.

⚠ DANGER

Wait until the engine and exhaust silencer have completely cooled down.

- Unscrew and remove the two upper fastening screws (1).

Tightening torque for screws (1): 3.6 ftlb (5 Nm).

- ★ Unscrew and remove the side fastening screw (2).

Tightening torque for screw (2): 3.6 ftlb (5 Nm).

- Unscrew and remove the two lower fastening screws (3).

Tightening torque for screws (3): 3.6 ftlb (5 Nm).

⚠ WARNING

Handle all plastic and painted components with care to avoid scraping or scratching them.

- Move the radiator spoiler (4) forward and slide it out from the side.
- Replace the internal insulating panel if damaged.

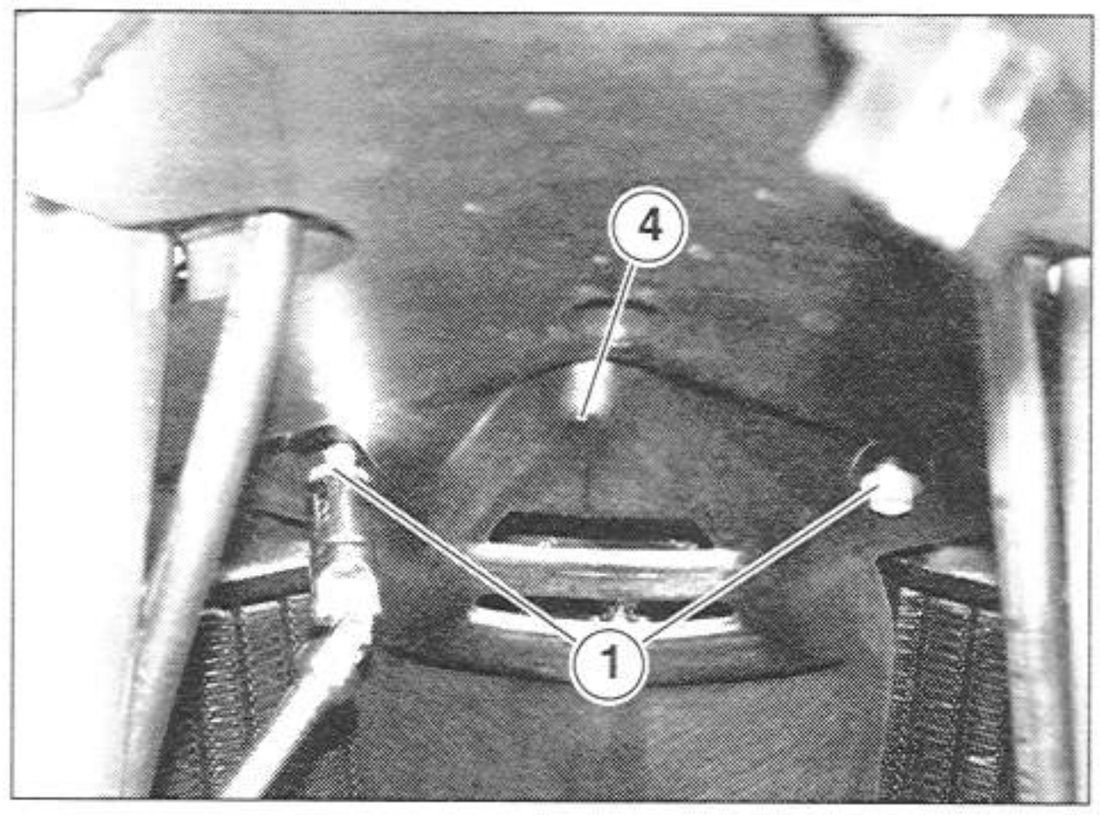

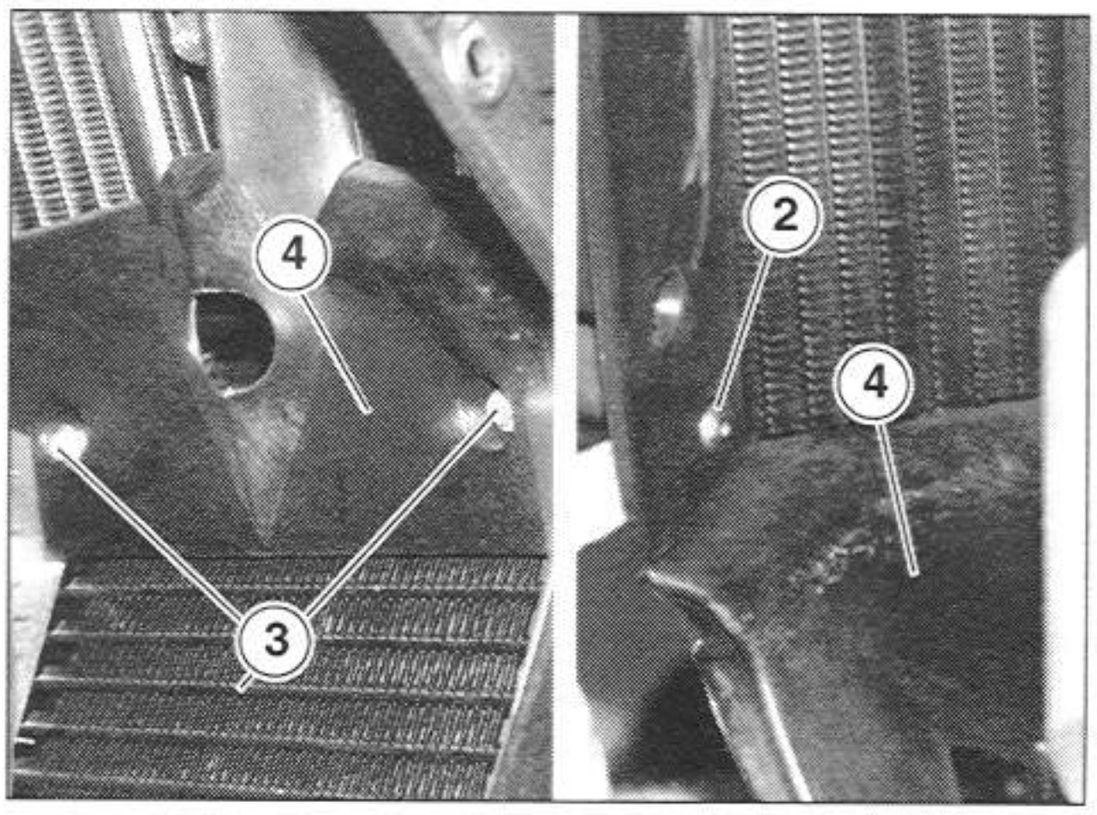

7.1.36 REMOVING THE TAILLIGHT

Carefully read 1.3.9 (PRECAUTIONS AND GENERAL INFORMATION).

- Place the vehicle on the center stand.
- Set the ignition switch to "⊗".
- Remove the saddle, see 7.1.1 (REMOVING THE SADDLE).
- Disconnect the connector electrical (1) from the taillight.

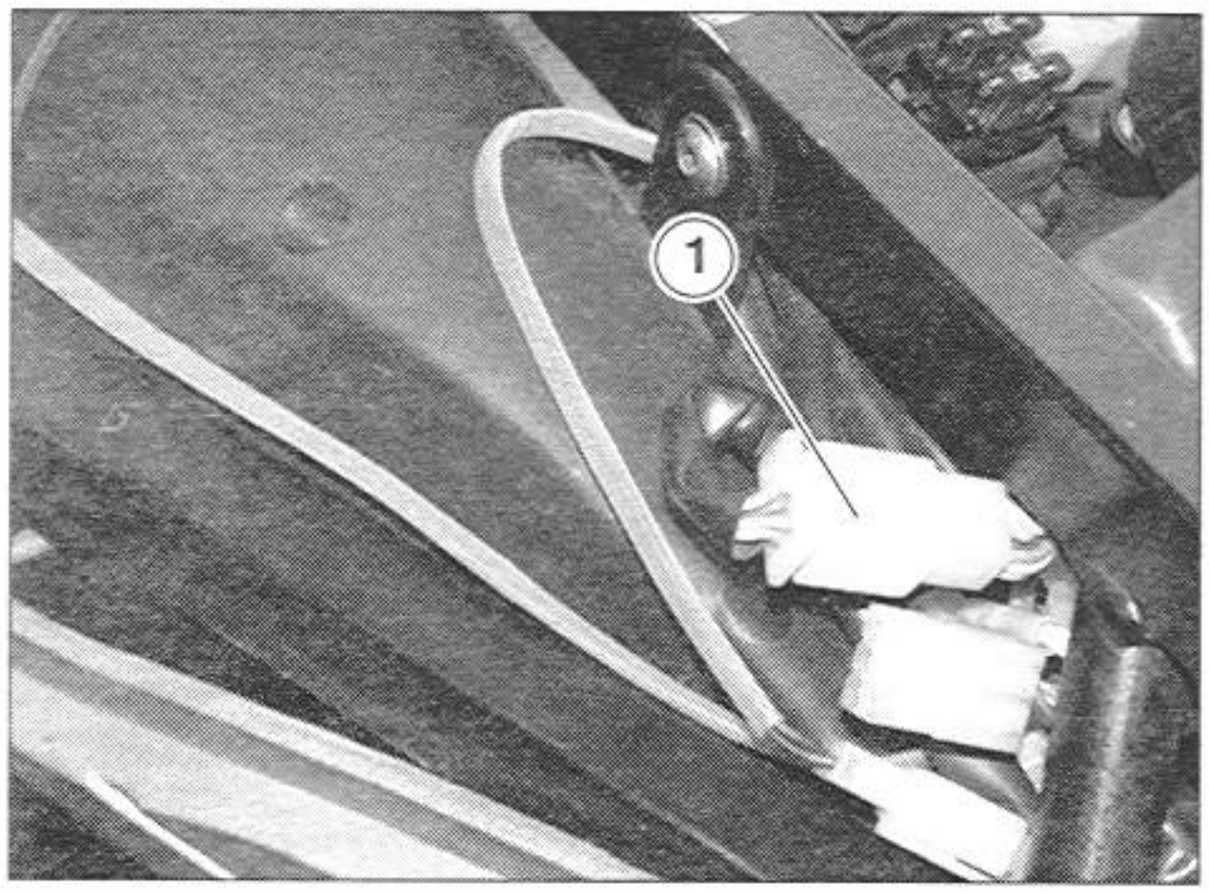

⚠ WARNING

When reassembling, make sure the electrical connector (1) is fitted properly.

- Release the wiring from the two line fasteners (2) and the clamp located under the grab handle.

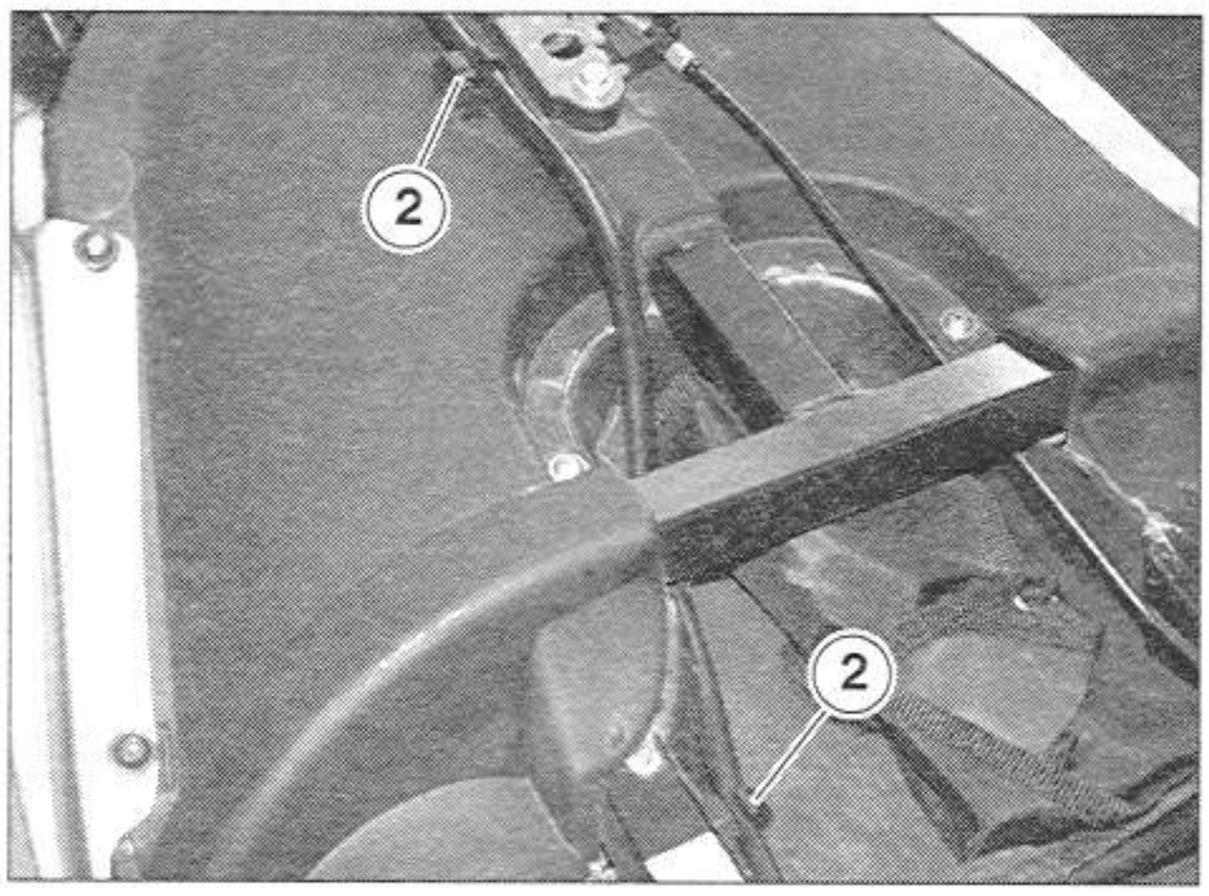

- Unscrew and remove the three fastening screws (3), retrieving the anti-vibration grommets and bushings.

Tightening torque for screws (3): 5.2 ftlb (7 Nm).

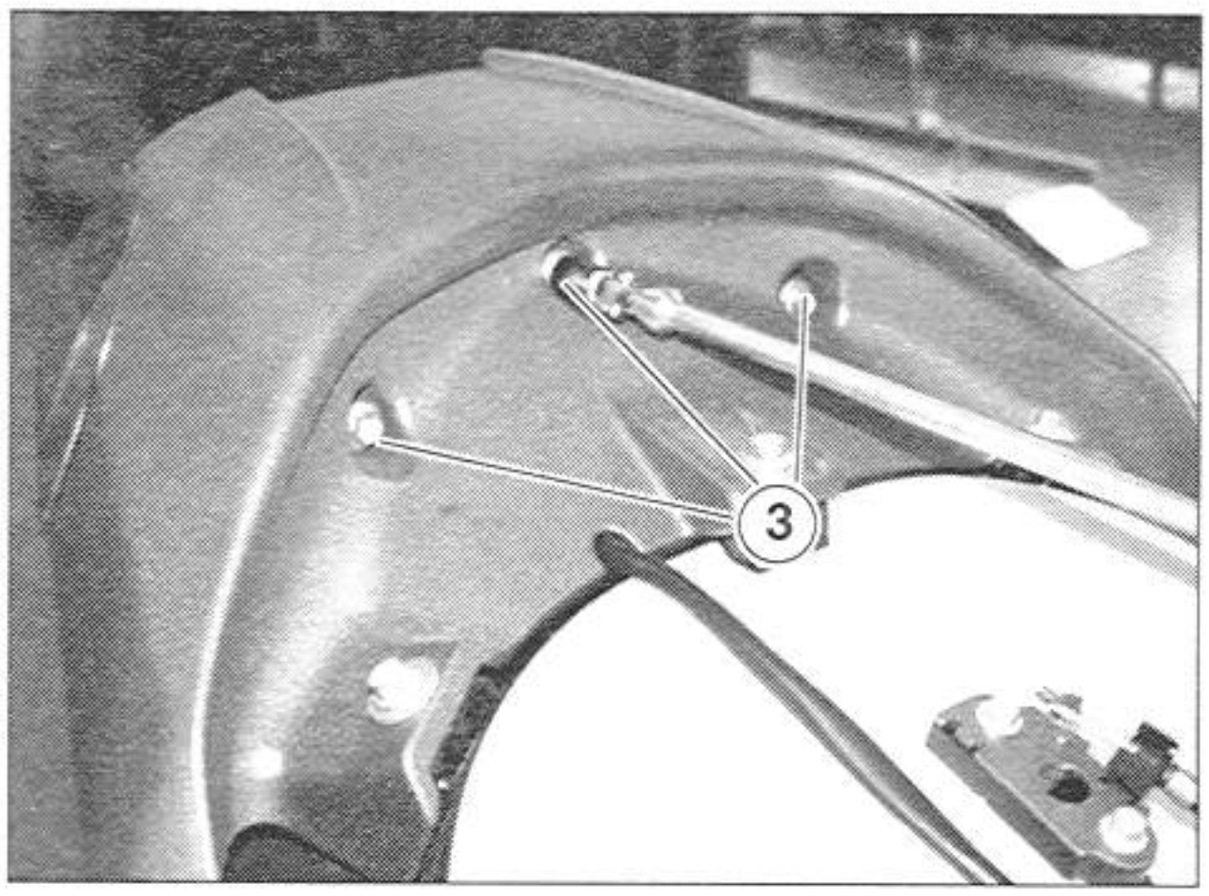

⚠ WARNING

Handle all plastic and painted components with care to avoid scraping or scratching them.

- Remove the complete taillight (4).

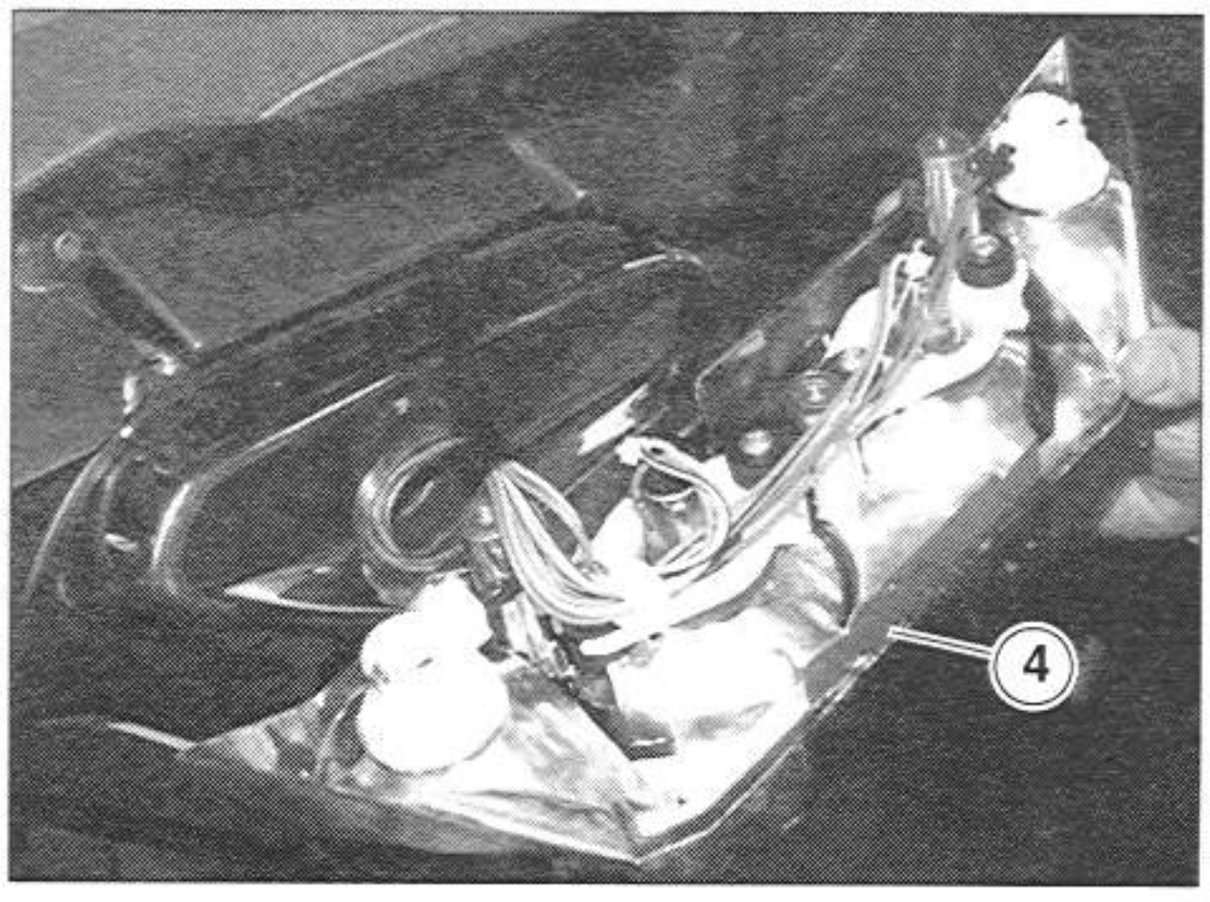

7.1.37 REMOVING THE REAR GRAB HANDLE

Carefully read 1.3.9 (PRECAUTIONS AND GENERAL INFORMATION).

- Carry out the first four steps described in paragraph 7.1.36 (REMOVING THE TAILLIGHT).
- Unscrew and remove the three fastening screws (1).

Tightening torque for screws (1): 7.3 ftlb (10 Nm).

⚠ WARNING

Handle all plastic and painted components with care to avoid scraping or scratching them.

- Remove the rear grab handle (2) complete with taillight.

⚠ WARNING

When reassembling, make sure the taillight wiring is positioned correctly.

- Place the complete rear grab handle on a flat surface.

NOTE If necessary, disassemble the taillight by unscrewing the three screws (3).

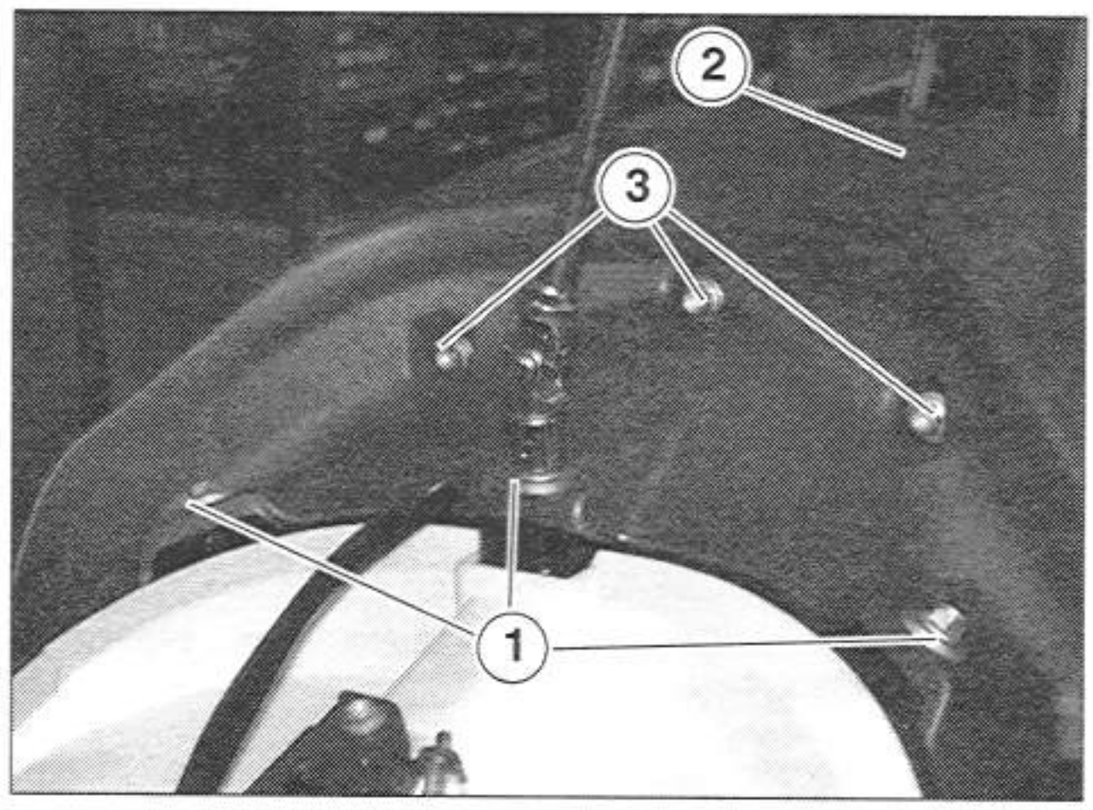

7.1.38 REMOVING THE SADDLE LOCK

Carefully read 1.3.9 (PRECAUTIONS AND GENERAL INFORMATION).

- Remove the saddle, see 7.1.1 (REMOVING THE SADDLE).
- Free the saddle release cable (1) by prying up the fork (2) with a screwdriver.
- Unscrew and remove the two screws (3) fastening the saddle release device (4) to the rear housing.

Tightening torque for screws (3): 7.3 ftlb (10 Nm).

- Remove the saddle release device (4).

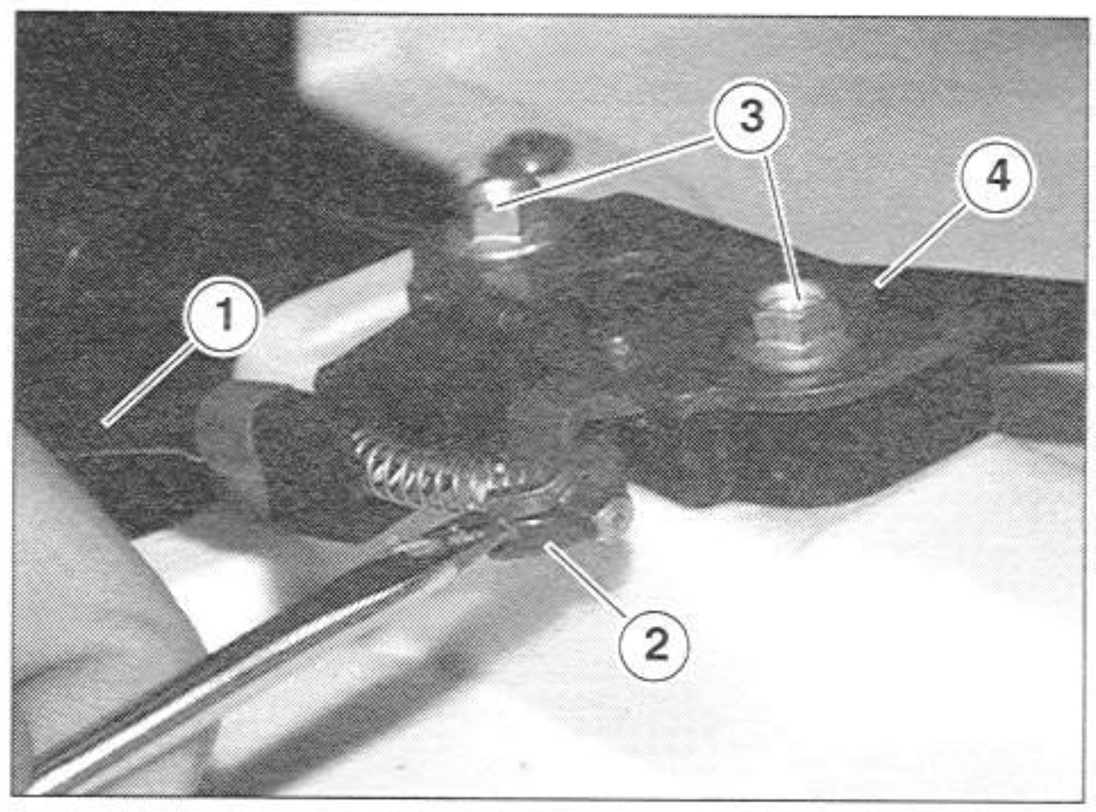

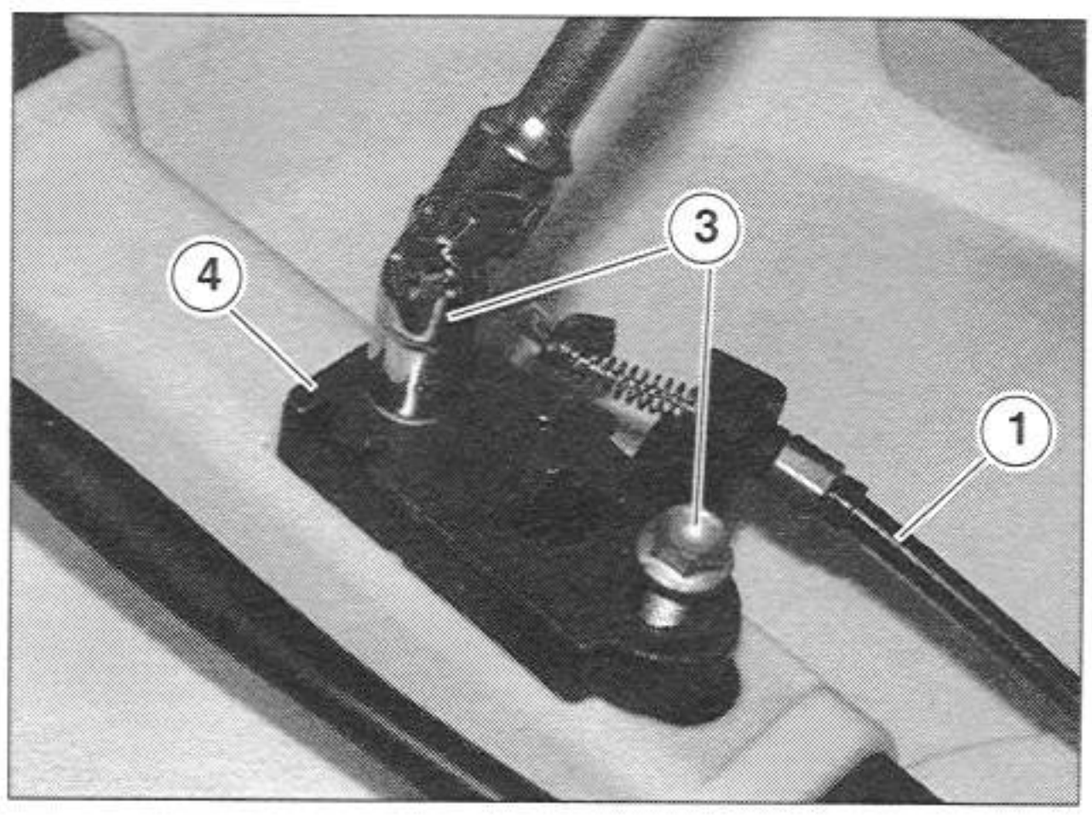

7.1.39 COMPLETELY REMOVING THE SADDLE RELEASE

- Remove the saddle release device, see 7.1.38 (REMOVING THE SADDLE LOCK).
- Unscrew and remove the two screws (1).

Tightening torque for screws (1): 0.7 ftlb (1 Nm).

- Unscrew and remove the screw (9).

Tightening torque for screws (9): 1.4 ftlb (2 Nm).

- Raise the left plate (2).
- Remove the saddle release cable (3) from its collar (4).
- Slide the cable terminal from the switch.
- Remove the hasp (5) and retrieve the plate (6).
- Remove the saddle release switch (7) from the left plate (2).

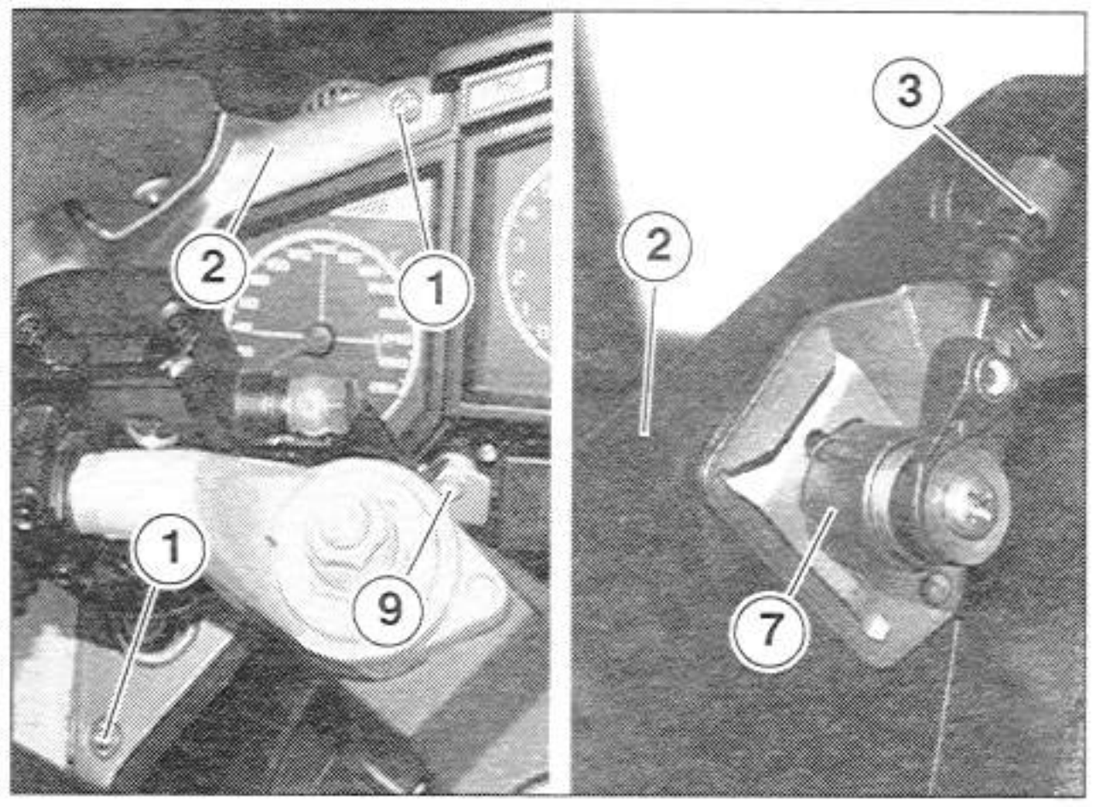

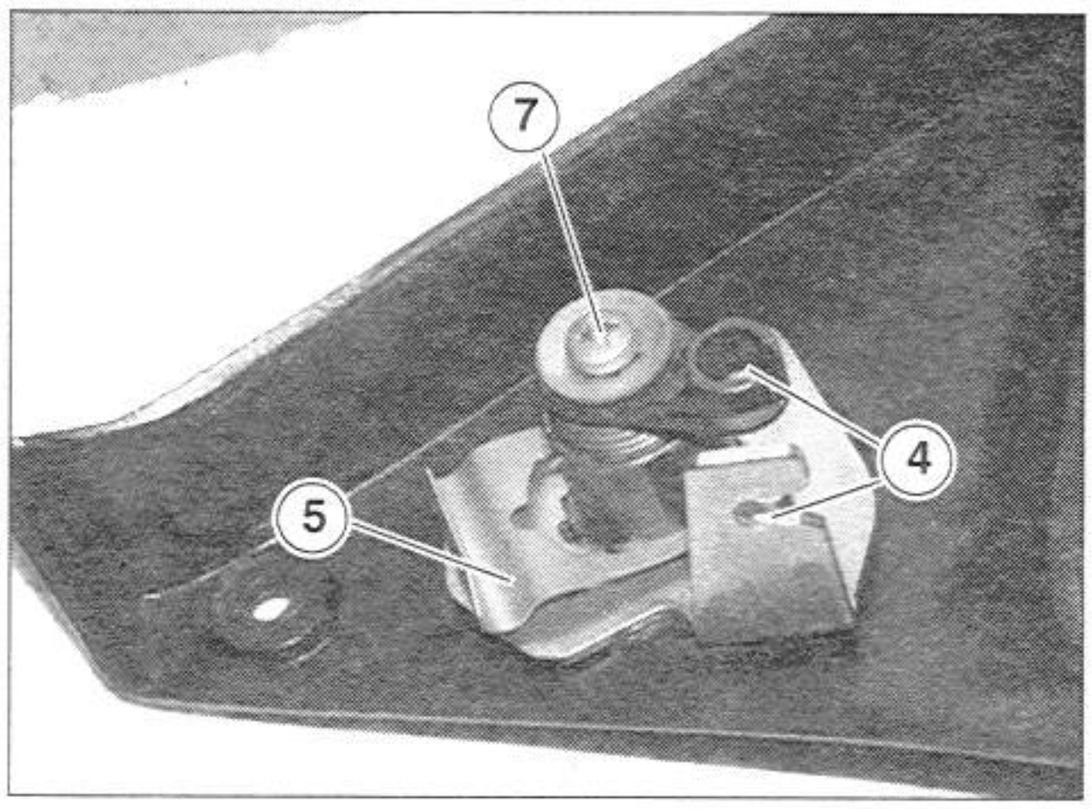

WARNING

When reassembling, make sure the reference element (8) is correctly positioned in its seat on the plate (6) and on the switch hasp (5).

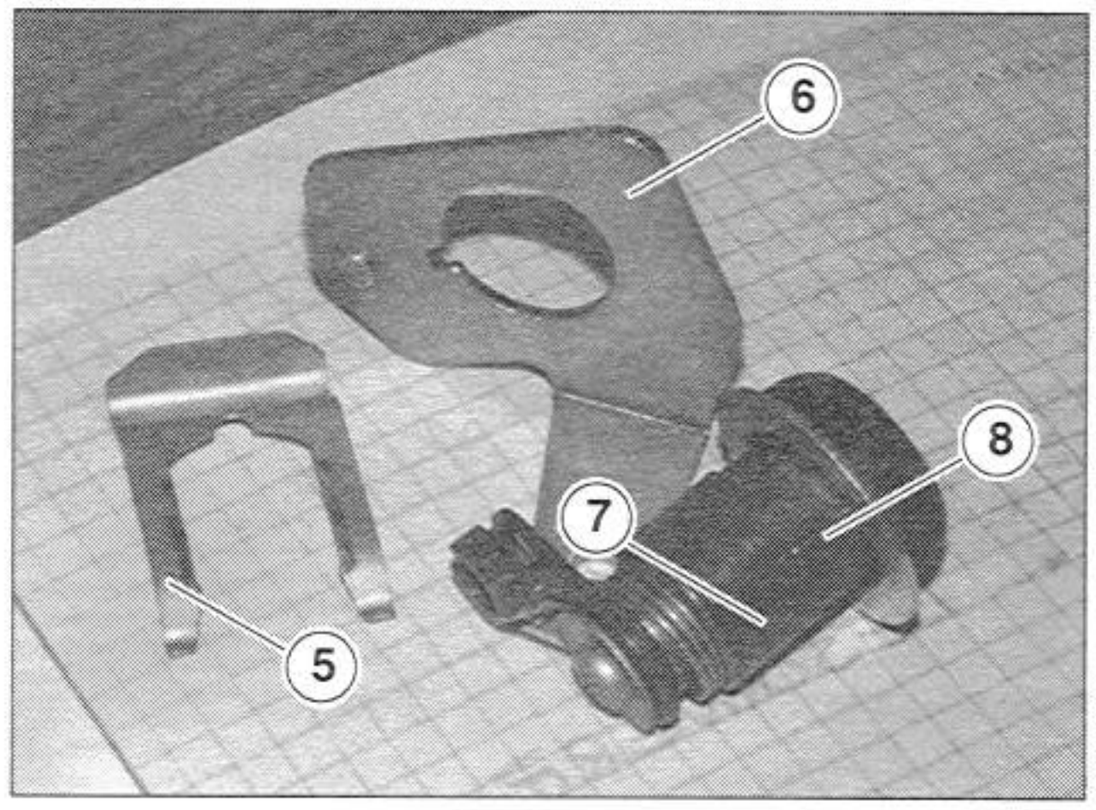

7.1.40 REMOVING THE LOWER SADDLE PANEL

- Place the vehicle on the center stand.
- Remove the saddle, see 7.1.1 (REMOVING THE SADDLE).
- Remove the saddle hook, see 7.1.38 (REMOVING THE SADDLE LOCK).
- Disconnect the connector electrical (1) from the taillight.

WARNING

When reassembling, make sure the electrical connector (1) is fitted properly.

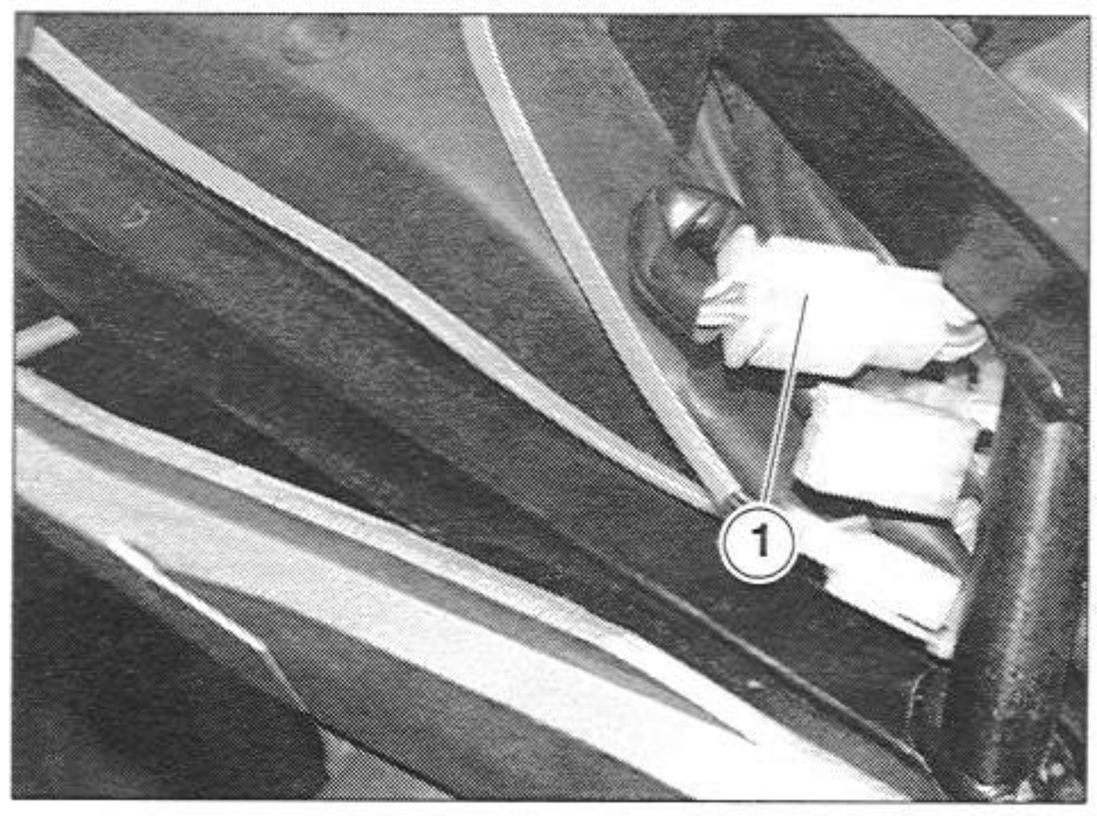

- Release the wiring from the two line fasteners (2).
- Move the wiring (4) to one side.
- Remove both bag racks, see 7.1.4 (REMOVING THE BAG RACKS).
- Unscrew and remove the two screws (3).

Tightening torque for screws (3): 2.2 ftlb (3 Nm).

- Remove the lower saddle panel.

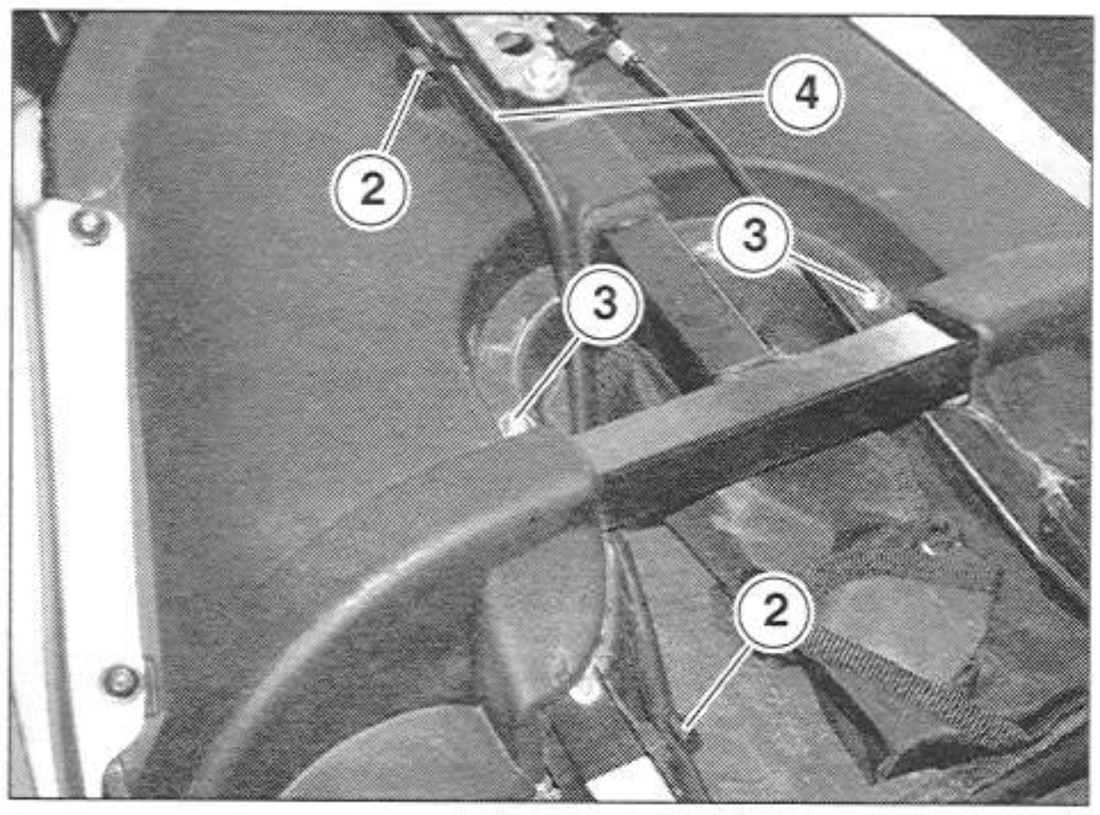

7.1.41 REMOVING THE SADDLE SUPPORT LOWER MOLDED COVER

Carefully read 1.3.9 (PRECAUTIONS AND GENERAL INFORMATION).

- Remove the rear grab handle, see 7.1.37 (REMOVING THE REAR GRAB HANDLE).
- Remove the fuel tank, see 7.1.5 (PARTIALLY REMOVING THE FUEL TANK).
- Remove the tools provided and any other items from the compartment.
- Remove the battery, see 7.1.9 (REMOVING THE BATTERY).
- Remove the muffler, see 7.1.50 (REMOVAL EXHAUST SILENCER).
- Remove the lower saddle panel, see 7.1.40 (REMOVING THE LOWER SADDLE PANEL).
- Pull the water drain tube (1) downward.

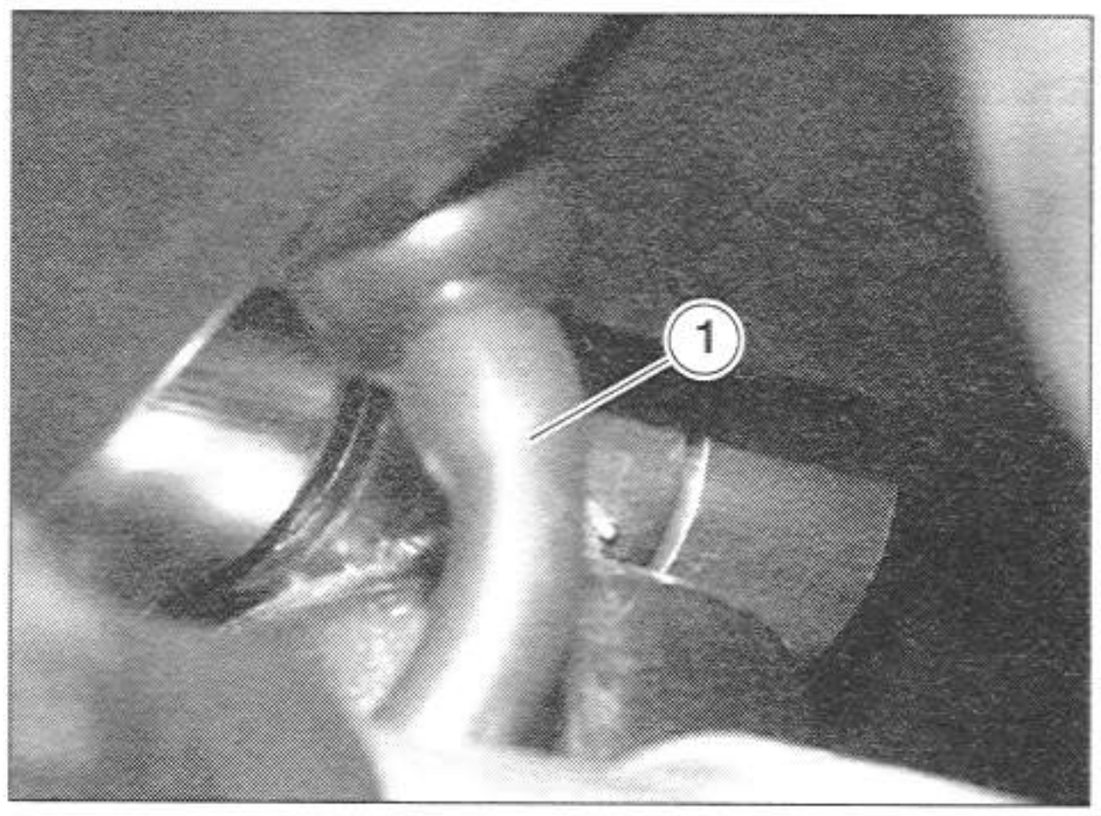

WARNING

When reassembling, make sure the drain tube is positioned properly.

- Release the starter relay mount (2) from its coupling.
- Release the fuse holder (3) from its mount.

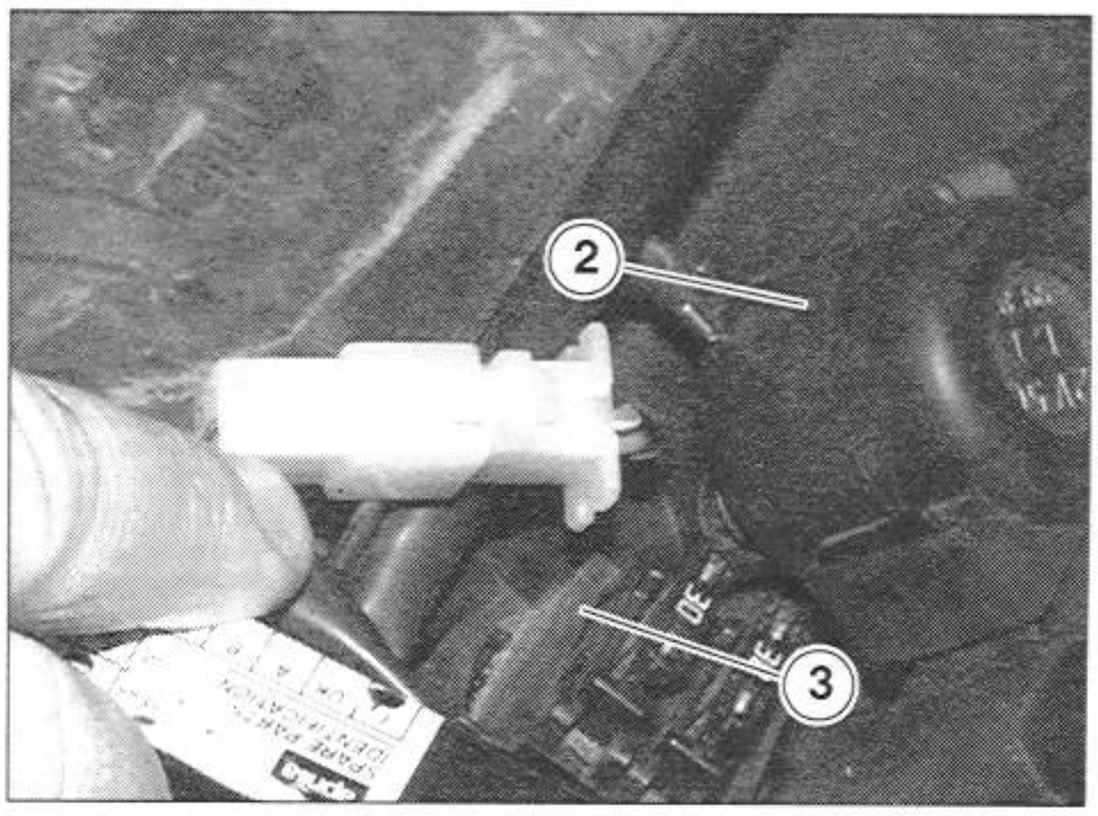

WARNING

When reassembling, make sure the electrical components and corresponding wiring are properly positioned.

- Unscrew and remove the two front fastening screws (4).

Tightening torque for screws (4): 7.3 ftlb (10 Nm).

- Unscrew and remove the three screws (5) retrieving the three clips (6).

Tightening torque for screws (5): 2.9 ftlb (4 Nm).

- ★ Unscrew and remove the screw (7).

Tightening torque for screw (7): 2.9 ftlb (4 Nm).

- Lower the front part and raise the back of the saddle support lower molded cover. (8).
- Remove the saddle support lower molded cover (8) by sliding it out from the back.

⚠ WARNING

Replace the adhesive gasket (9) if worn or deteriorated.

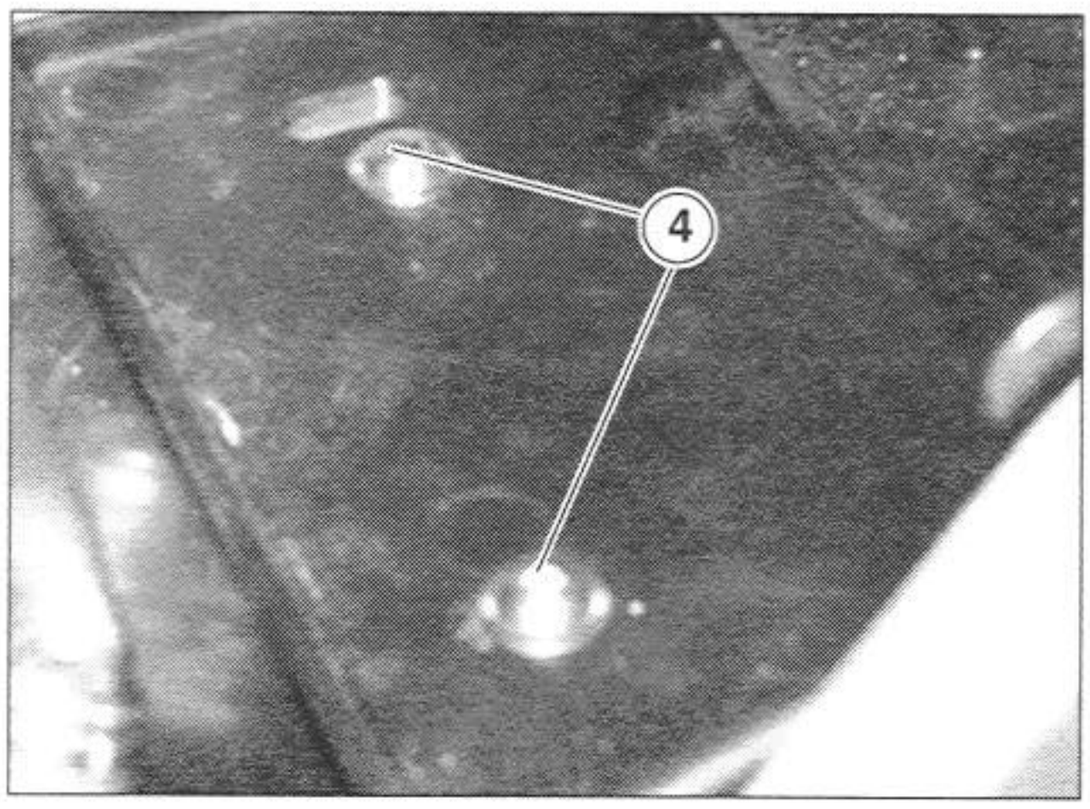

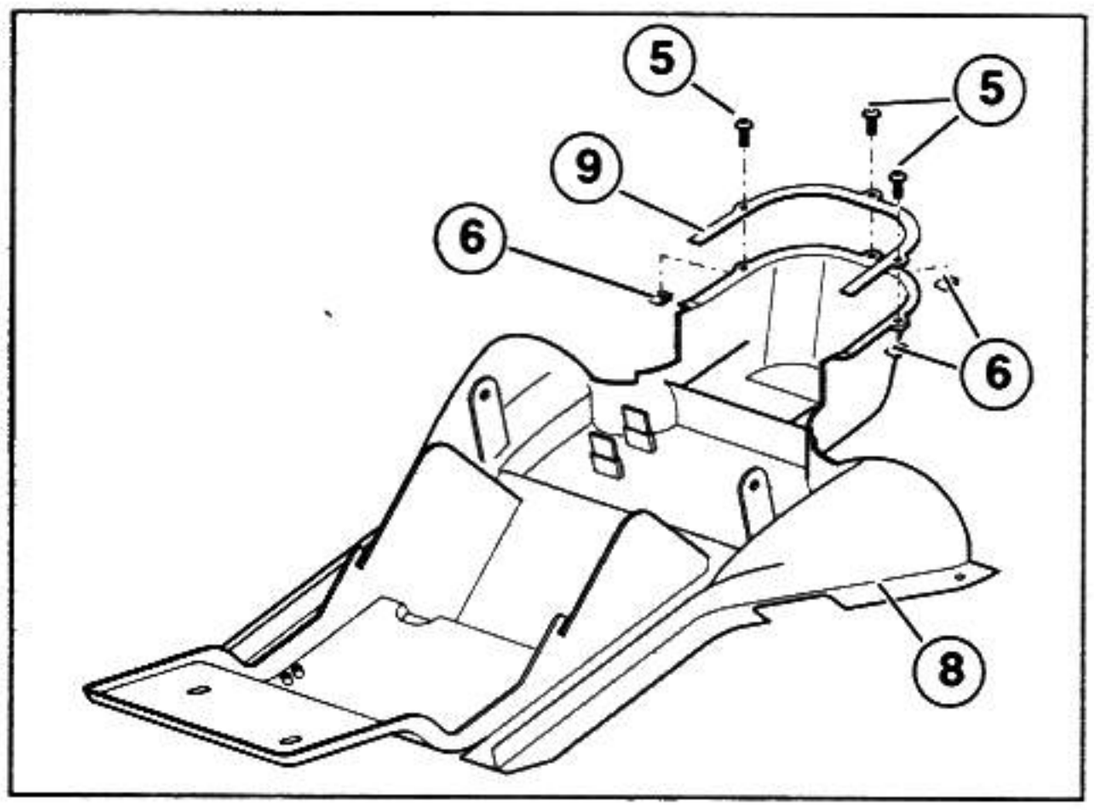

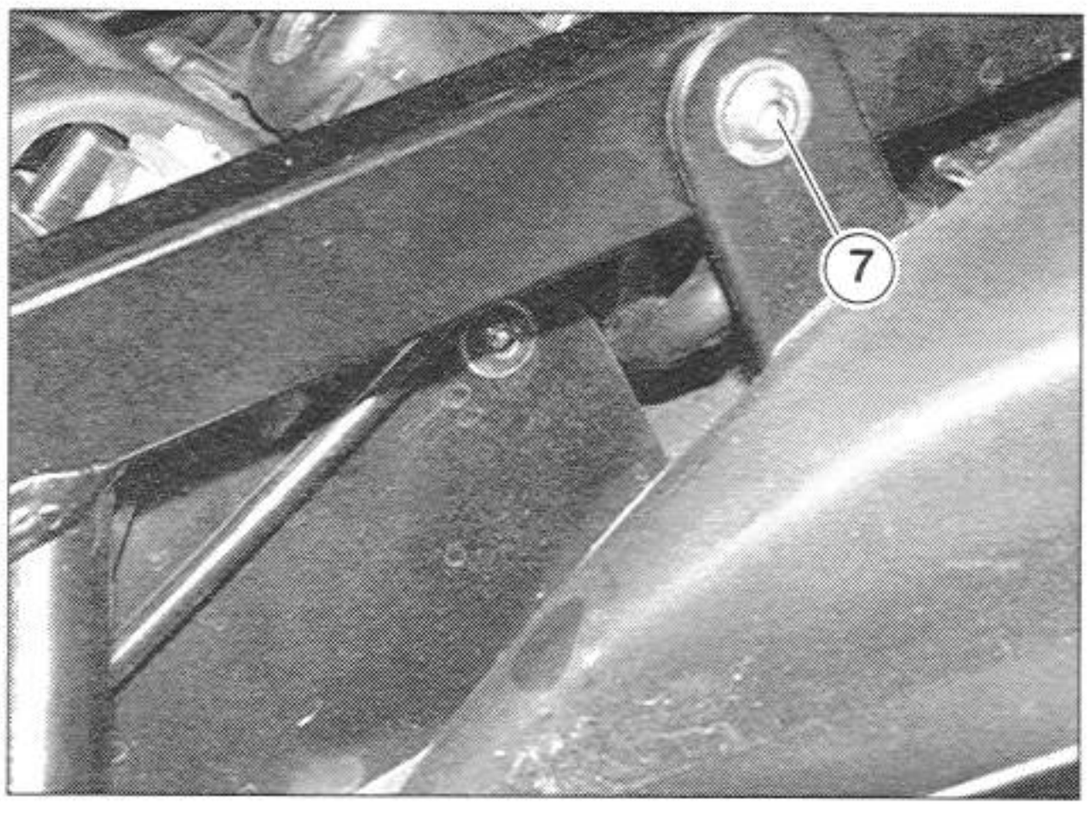

7.1.42 REMOVING THE LICENSE PLATE HOLDER

Carefully read 1.3.9 (PRECAUTIONS AND GENERAL INFORMATION).

- Remove both bag racks, see 7.1.4 (REMOVING THE BAG RACKS).
- Disconnect the license plate lamp connector (1).

⚠ WARNING

When reassembling make sure the license plate lamp connector (1) is properly fitted.

- Remove the complete license plate holder (2).

NOTE Remove the individual components if necessary.

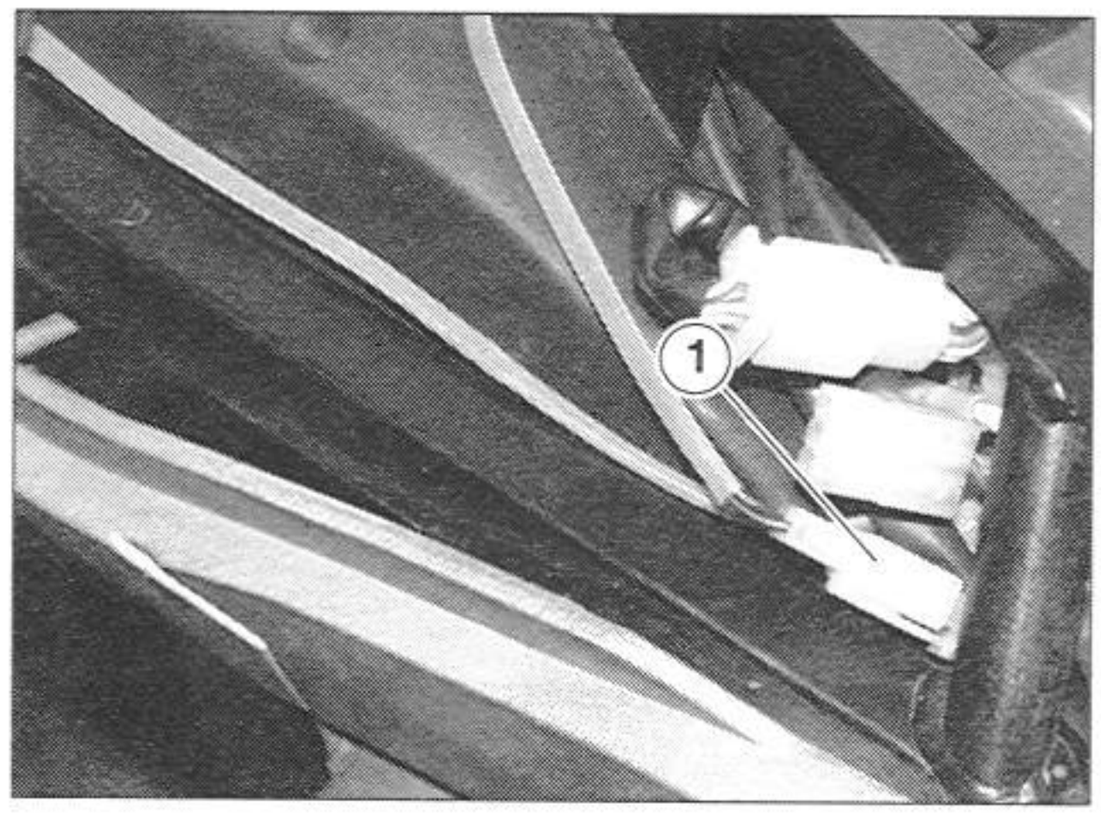

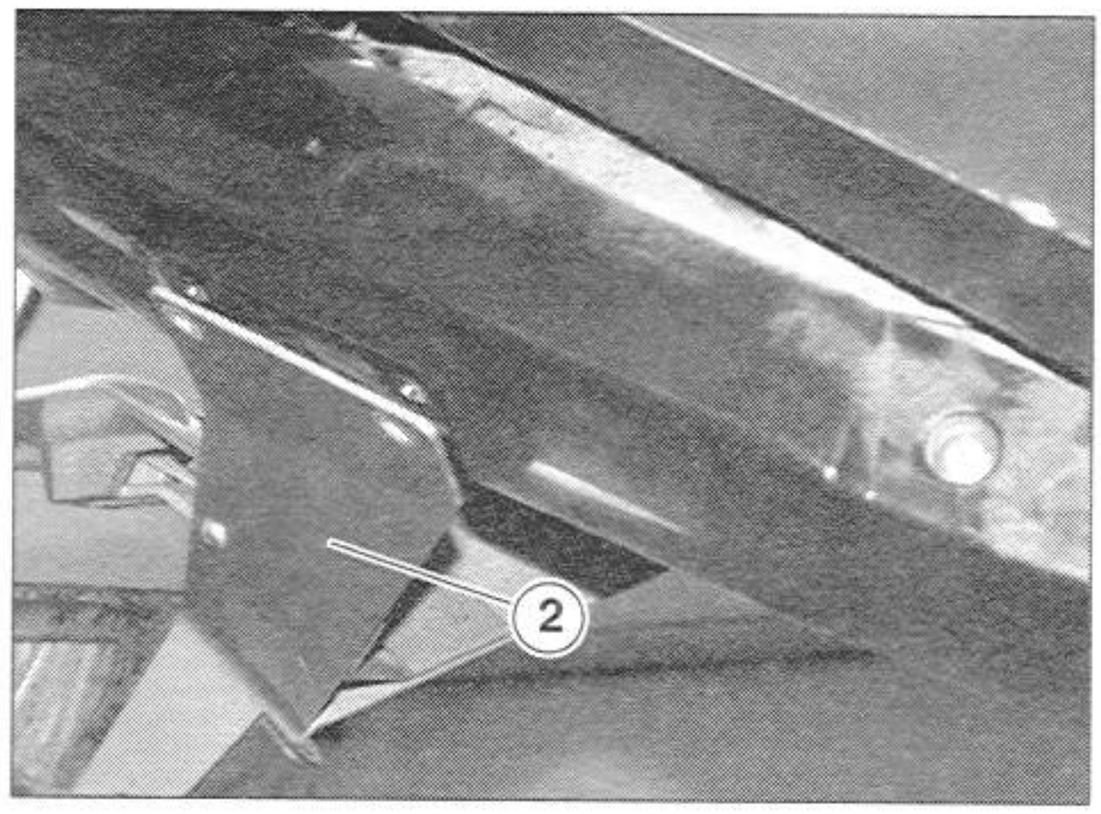

7.1.43 REMOVING THE PASSENGER FOOTREST SUPPORTS

Carefully read 1.3.9 (PRECAUTIONS AND GENERAL INFORMATION).

- Remove the saddle, see 7.1.1 (REMOVING THE SADDLE).
- Unscrew and remove the two screws (1).

Tightening torque for screws (1): 18 ftlb (25 Nm).

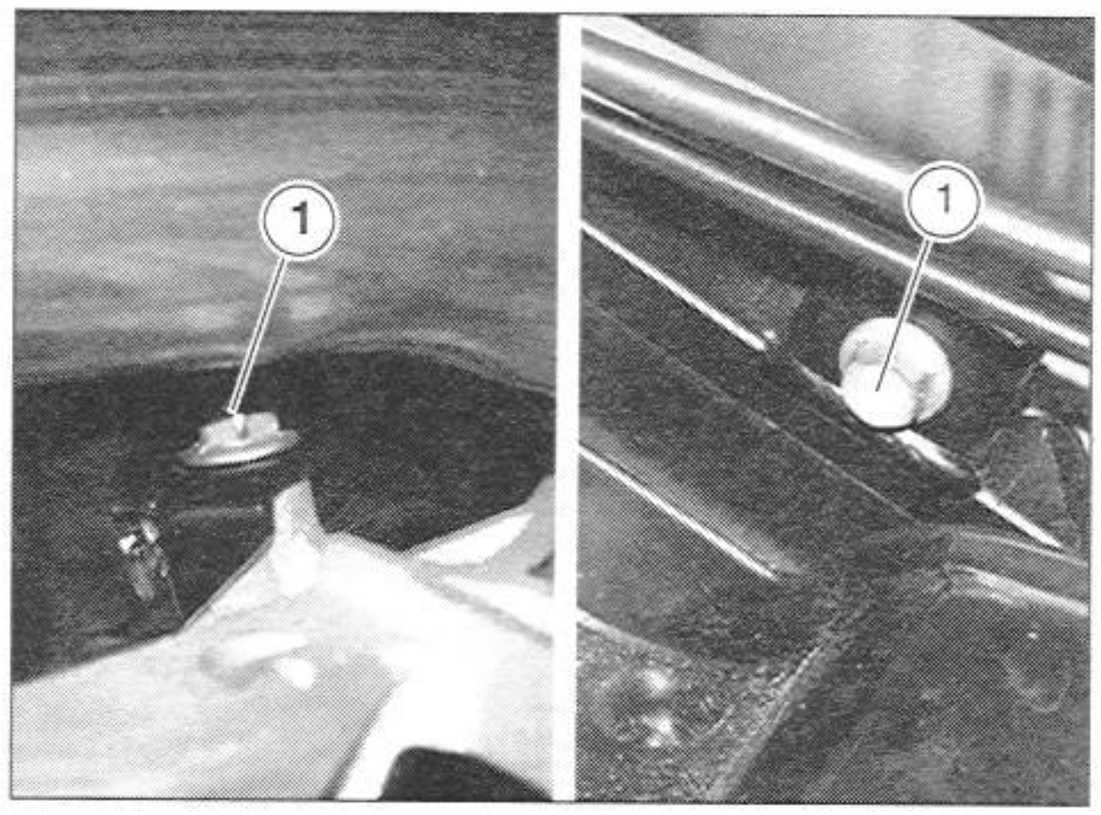

- Remove the footrest support (2) complete with footrest.
- Also remove the footrest (3) if necessary, see 7.1.47 (REMOVING THE RIDER FOOTREST).

NOTE If necessary, repeat the above steps to remove the other passenger footrest support.

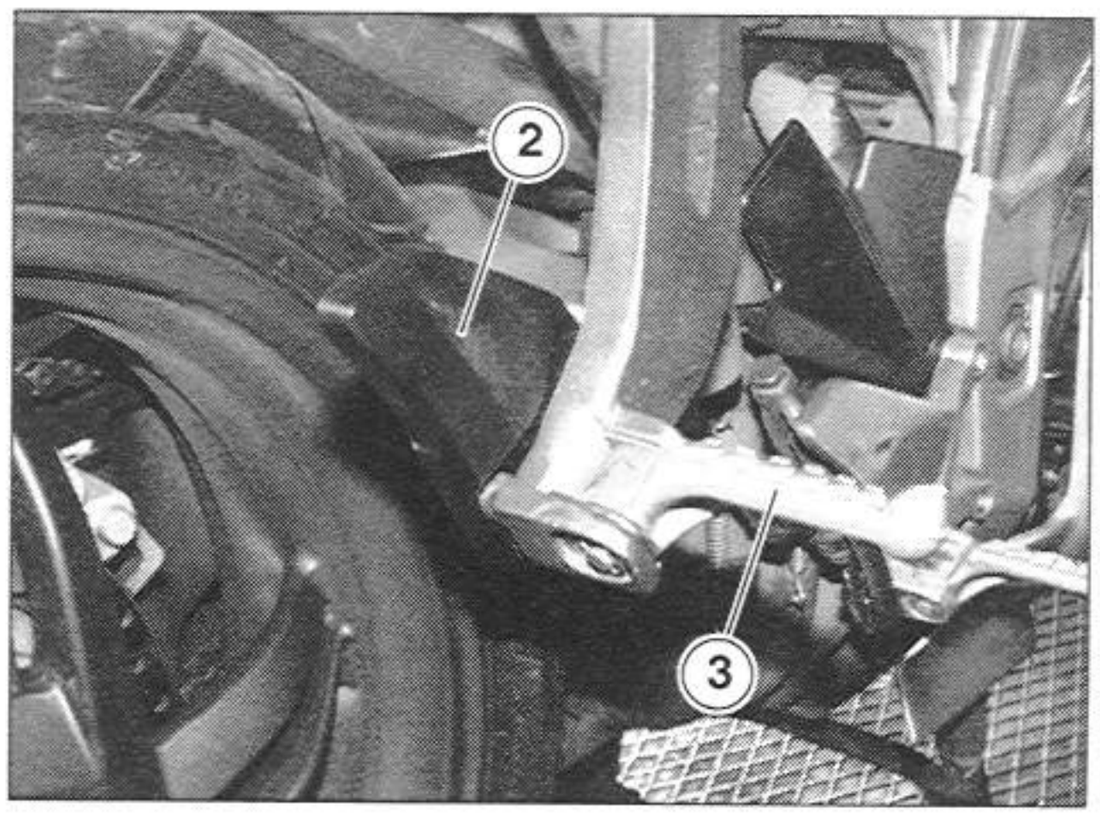

7.1.44 REMOVING THE PASSENGER FOOTREST

Carefully read 1.3.9 (PRECAUTIONS AND GENERAL INFORMATION).

- Place the vehicle on the stand.

⚠ DANGER

Wait until the engine and exhaust silencer have completely cooled down.

- Remove the retainer ring (1).
- Slide out the pin (2).

⚠ WARNING

Take care not to lose the ball (5), ejected by the spring (6), in the process.

- Remove the footrest (3) and retrieve the two shims (4-7), the ball (5) and the spring (6).

⚠ WARNING

Be careful not to reverse the position of the two shims (4-7) during reassembly.

NOTE If necessary, repeat the above steps to remove the other footrest.

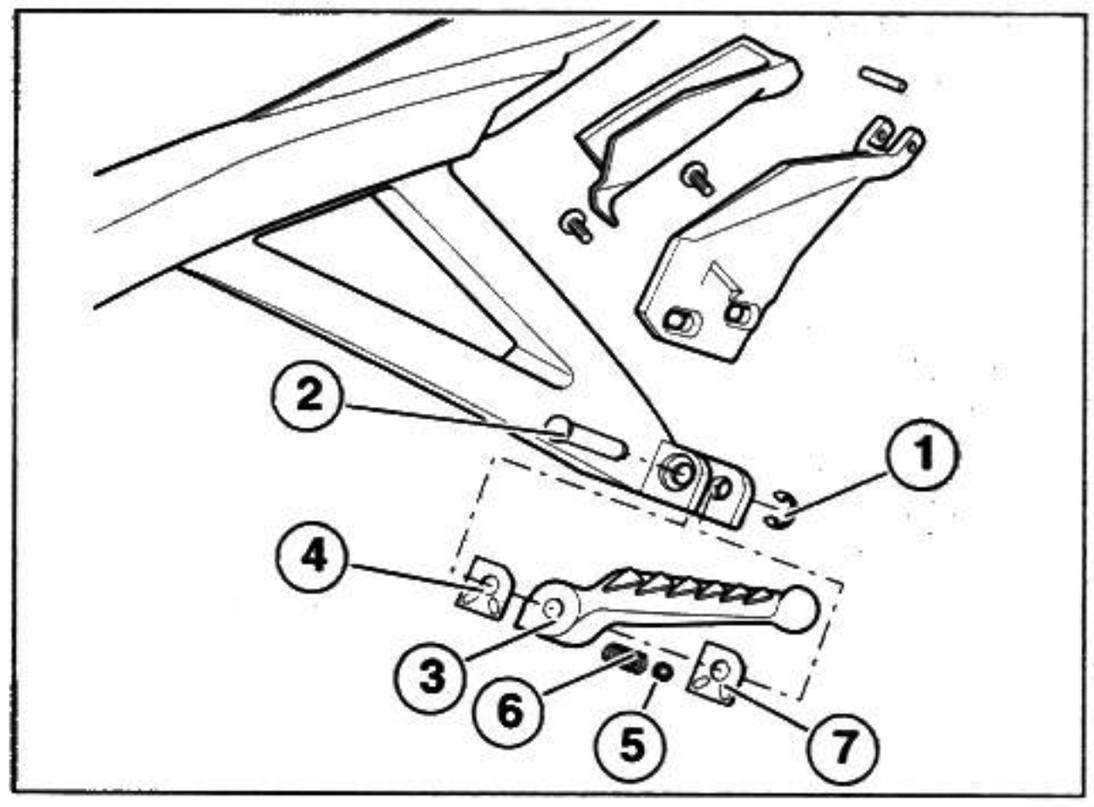

7.1.45 REMOVING THE LEFT RIDER FOOTREST SUPPORT

Carefully read 1.3.9 (PRECAUTIONS AND GENERAL INFORMATION).

- Place the vehicle on the stand.
- Remove the lower fairing, see 7.1.33 (REMOVING THE LOWER FAIRING).
- Unscrew and remove the screw (1) holding the gearshift lever on the left footrest support.

Tightening torque for screw (1): 10.8 ftlb (15 Nm).

- Slide out the lever, which remains attached via the rod.
- Unscrew and remove the two screws (2).

Tightening torque for screws (2): 18 ftlb (25 Nm).

- Remove the complete footrest support (3).

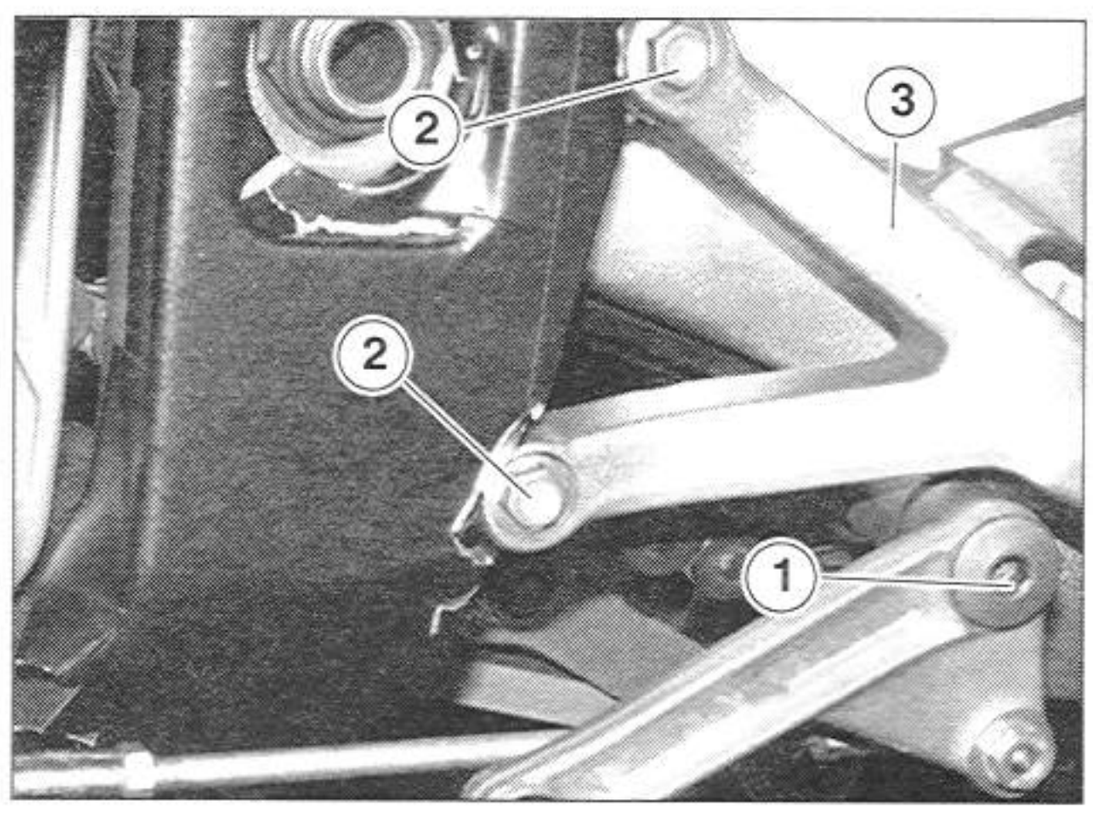

7.1.46 REMOVING THE RIGHT RIDER FOOTREST SUPPORT

- Carry out the first two steps described in the paragraph 7.1.45 (REMOVING THE LEFT RIDER FOOTREST SUPPORT).
- Carry out the first three steps described in the paragraph 7.1.49 (REMOVING THE REAR BRAKE LEVER).
- Unscrew and remove the two screws (1) holding the rear brake master cylinder (2).

Tightening torque for screws (1): 7.3 ftlb (10 Nm).

- Retrieve the guard (3).
- Unscrew and remove the screw (4).

Tightening torque for screws (4): 7.3 ftlb (10 Nm).

- Move the rear brake master cylinder (2) and rear brake fluid reservoir (5), still fastened together, making sure the latter remains upright, to prevent spills.
- Unscrew and remove the two screws (6).

Tightening torque for screws (6): 18 ftlb (25 Nm).

- Remove the footrest support (7) complete with brake lever (8).

NOTE Also remove the brake lever (8) if necessary.

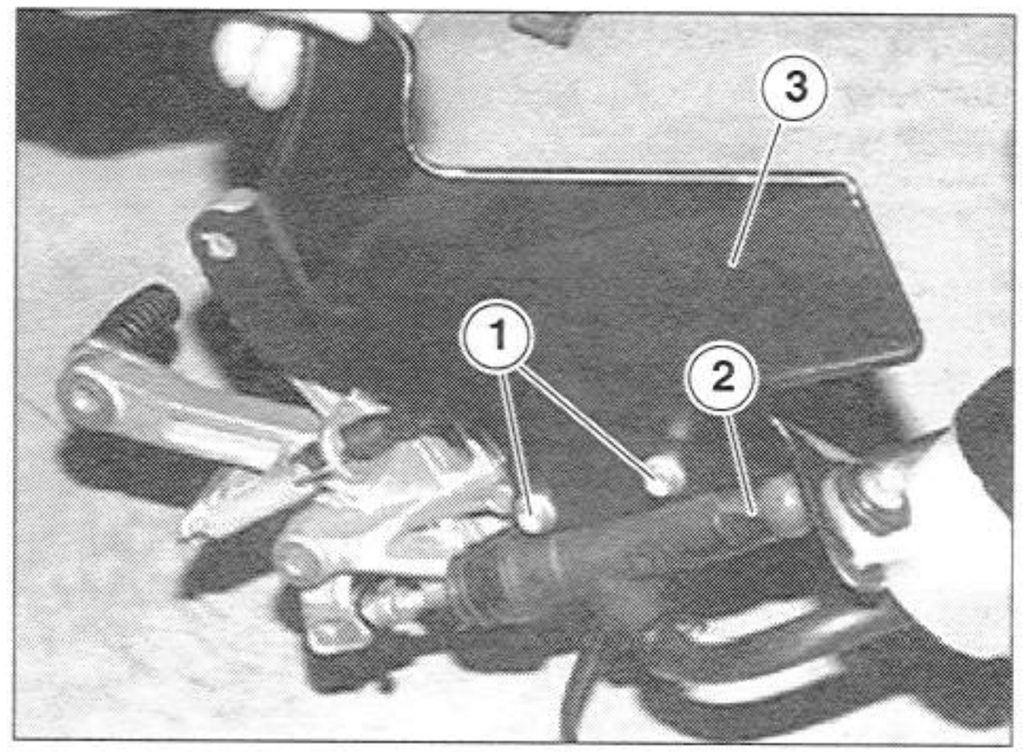

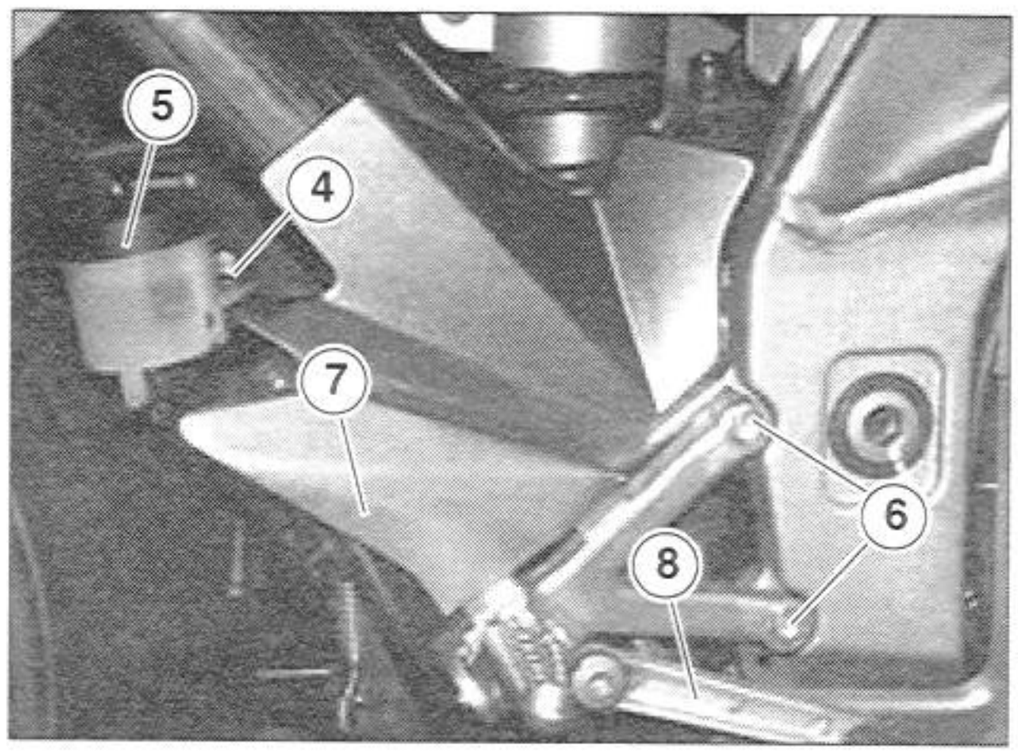

7.1.47 REMOVING THE RIDER FOOTREST

Carefully read 1.3.9 (PRECAUTIONS AND GENERAL INFORMATION).

- Place the vehicle on the stand.

DANGER

Wait until the engine and exhaust silencer have completely cooled down.

- Remove the retainer ring (1).
- Slide out the pin (2).
- Retrieve the footrest (3) and spring (4).

NOTE If necessary, repeat the above steps to remove the other rider footrest.

7.1.48 COMPLETELY REMOVING THE GEARSHIFT LEVER

⚠ WARNING

Before removing the gearshift lever, mark both the lever and shaft so that you can place them correctly when reassembling.

- Place the vehicle on the center stand.
- Remove the left lower fairing, see 7.1.33 (REMOVING THE LOWER FAIRING).
- Loosen the screw (1) and slide out the jaw (2) from the gearbox pivot.

Tightening torque for screws (1): 7.3 ftlb (10 Nm).

- Unscrew and remove the pin (3) retrieving the washer (4).
- Slide the gearshift pedal (5) out from the side, complete with rods.

NOTE Also replace the individual elements if necessary.

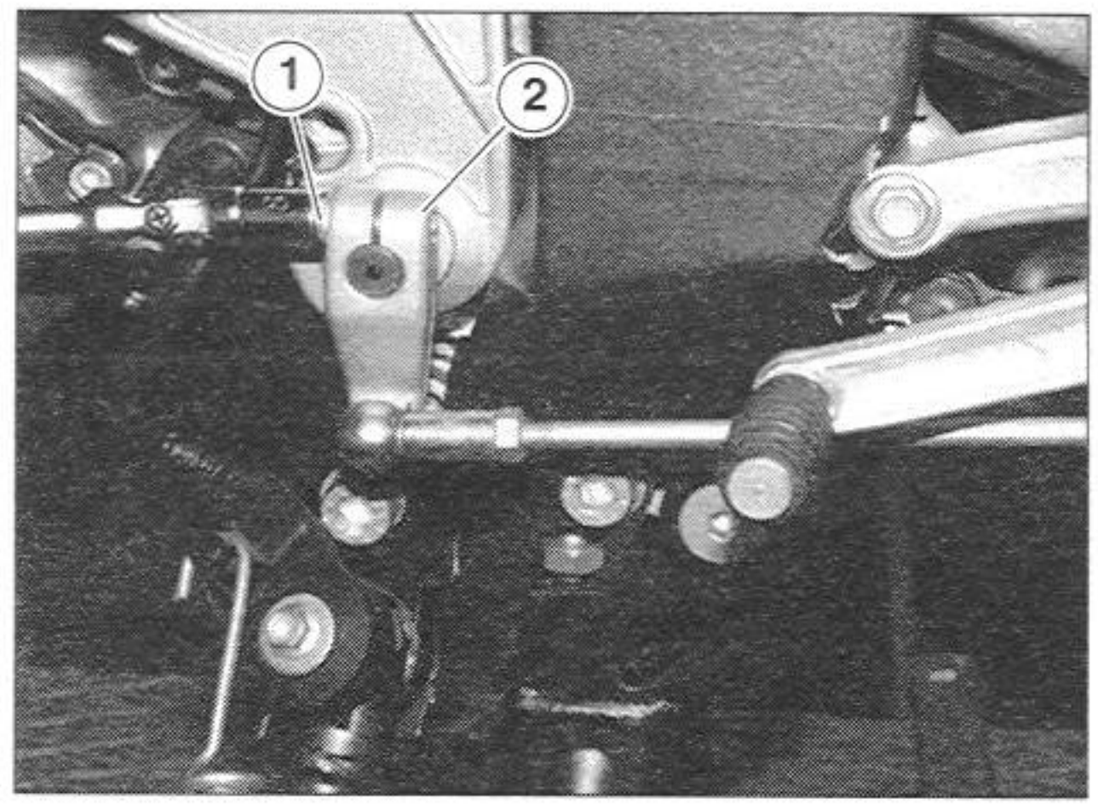

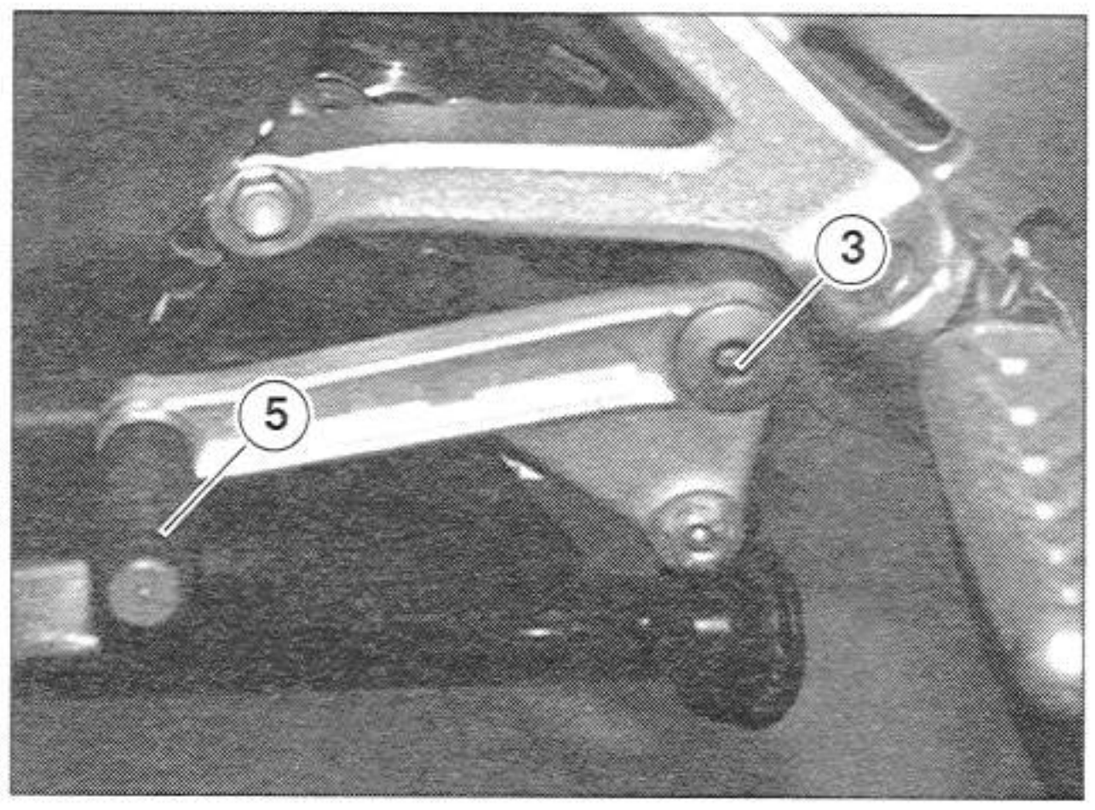

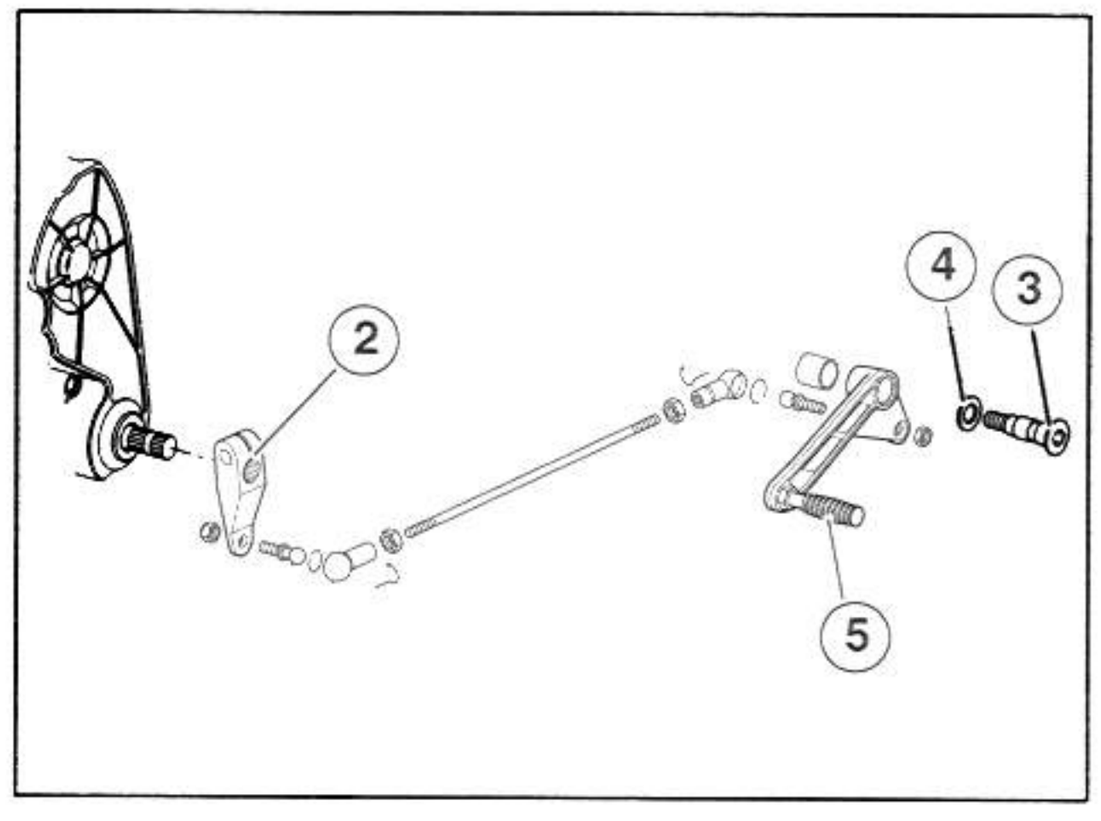

7.1.49 REMOVING THE REAR BRAKE LEVER

Carefully read 1.3.9 (PRECAUTIONS AND GENERAL INFORMATION).

- Place the vehicle on the stand.
- Move the retainer ring (1).
- Turn the fork axle (2) downward.
- Slide out the fork axle (2).
- Release the spring (3) from the lever (4).
- Remove the rear stop switch (5).

Tightening torque for rear stop switch (5): 7.3 ftlb (10 Nm).

- Unscrew and remove the pin (6) and retrieve the washer (7).
- Remove the lever (4).
- Remove the bushing (8) if necessary.

NOTE When reassembling, apply LOCTITE® 243 to the thread of the pin (6).

Tightening torque for pin (6): 10.8 ftlb (15 Nm).

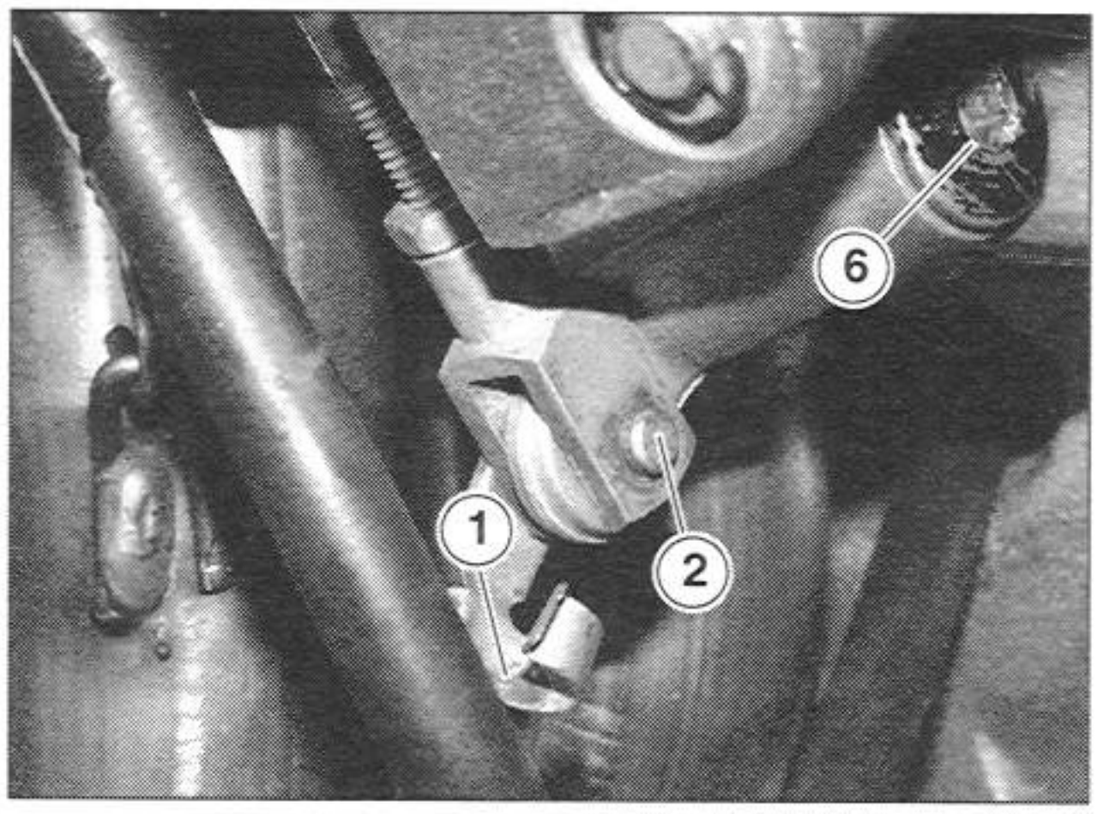

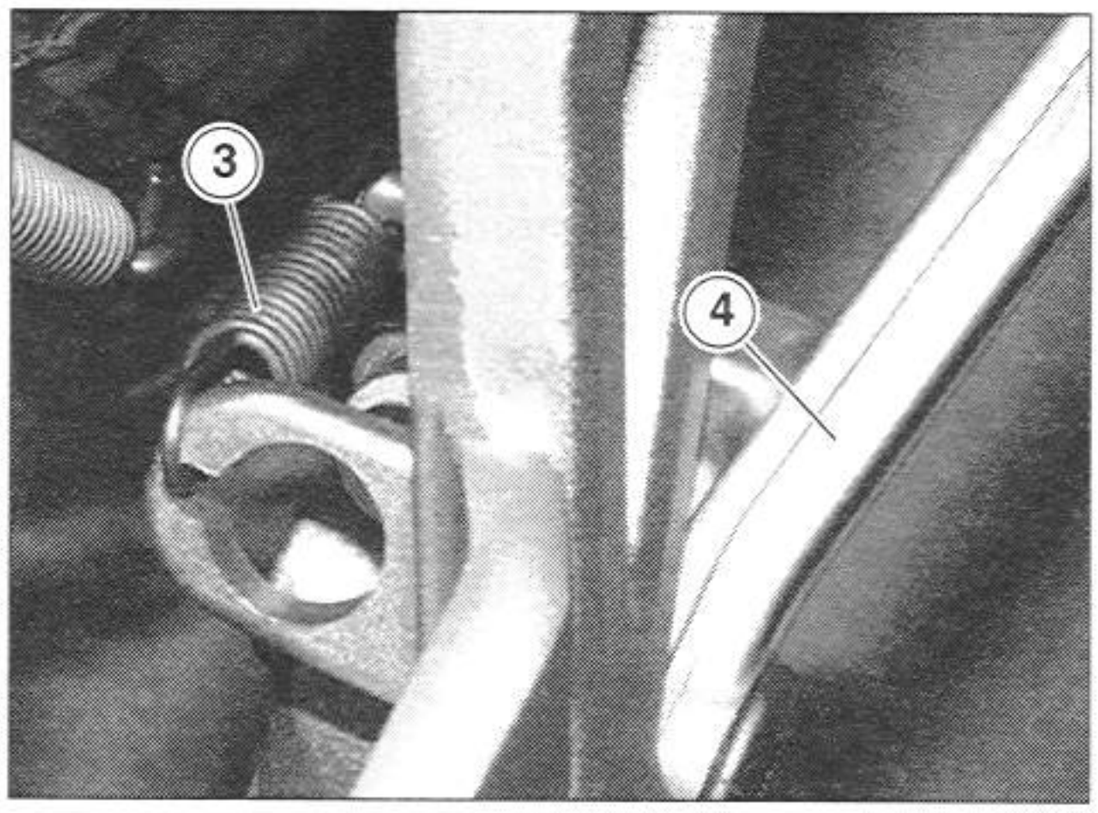

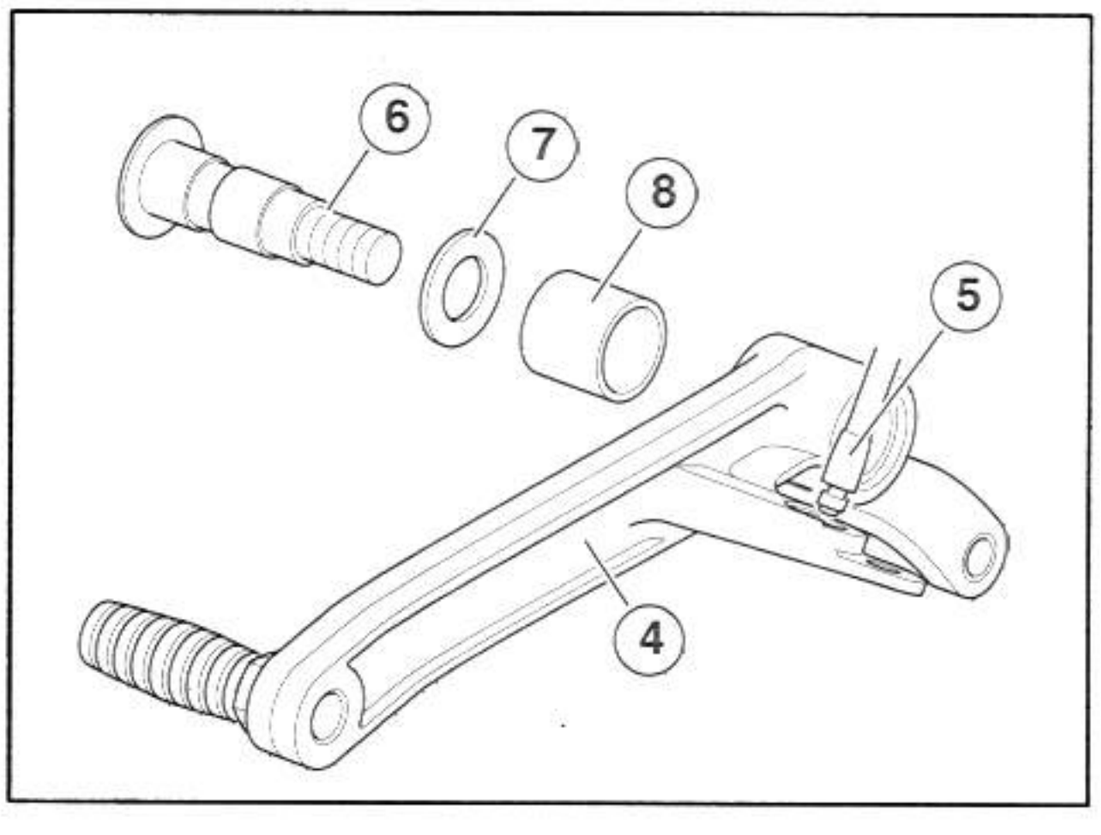

7.1.50 REMOVING THE EXHAUST SILENCER

Carefully read 1.3.9 (PRECAUTIONS AND GENERAL INFORMATION).

- Remove the rear grab handle, see 7.1.37 (REMOVING THE REAR GRAB HANDLE).
- Disconnect the license plate lamp-taillight connector (9).

⚠ WARNING

When reassembling make sure the license plate lamp-taillight connector (9) is properly coupled.

- ★ Loosen the clamp (1) fastening the muffler (2) to the exhaust pipes (3).

⚠ WARNING

When reassembling, the muffler must rest against the clamp(1) fastened to the exhaust pipe (3).
When reassembling, apply black silicone between the muffler (2) and the exhaust pipes, see 2.41 (FASTENERS).

- Unscrew and remove the screw (4), retrieving the nut (5).

Tightening torque for screw (4): 7.3 ftlb (10 Nm).

- Remove the exhaust silencer (2) complete with license plate holder (8).
- Retrieve the two grommets (6).

⚠ WARNING

Check the two grommets (6) and replace them if damaged.

- If necessary, unscrew and remove the four screws (7) and remove the license plate holder complete with side guards (8).

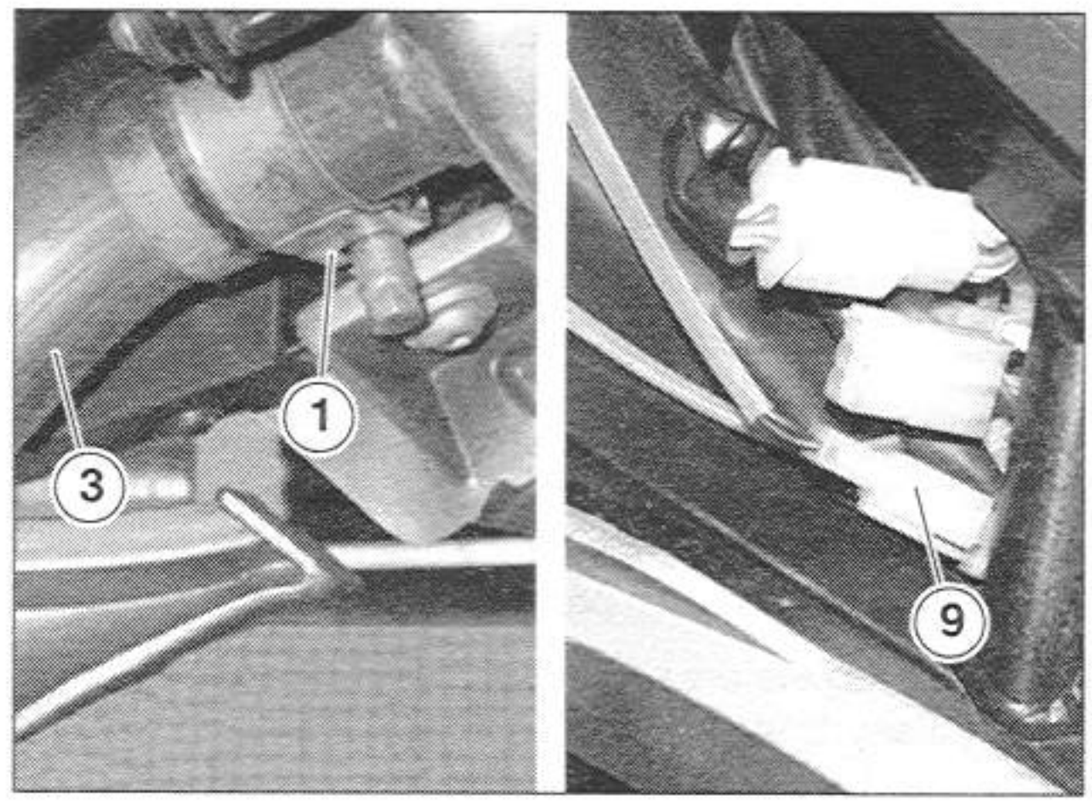

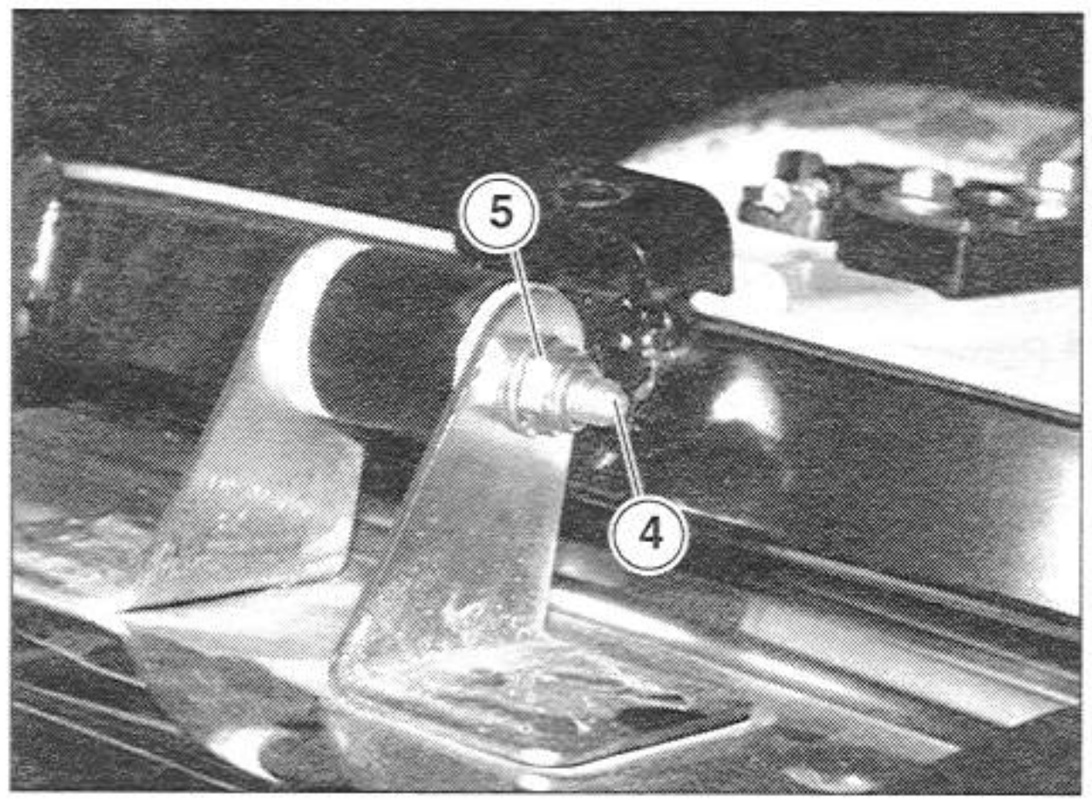

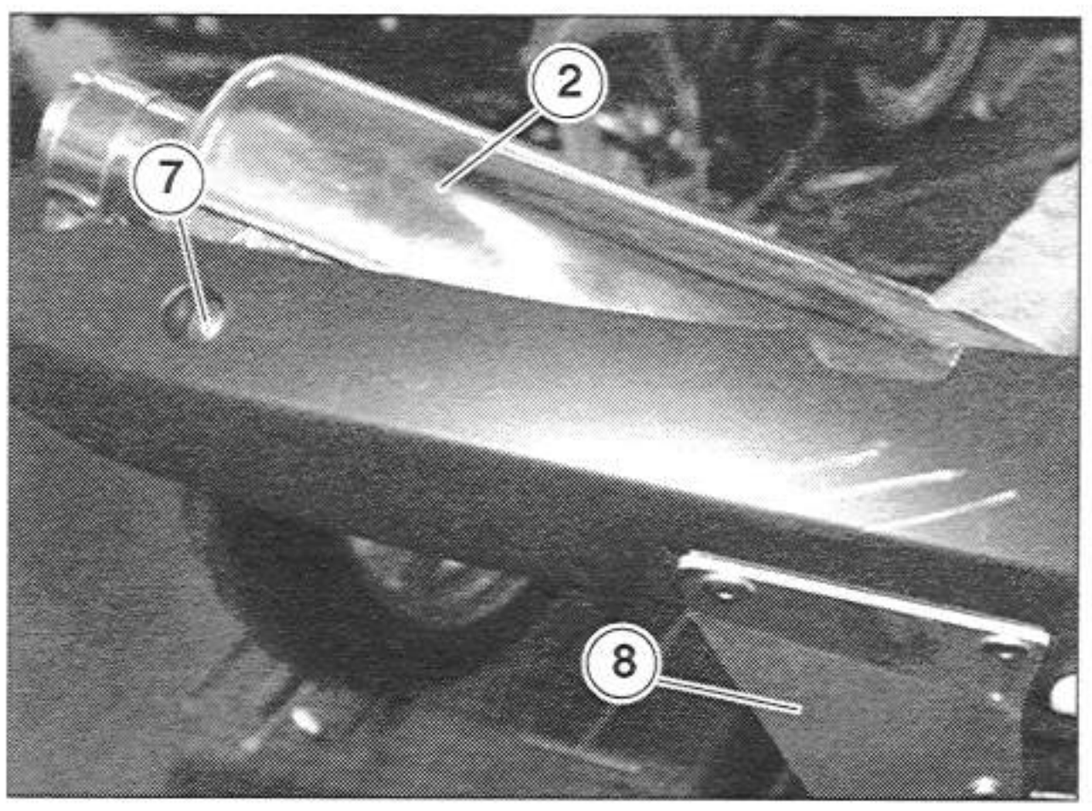

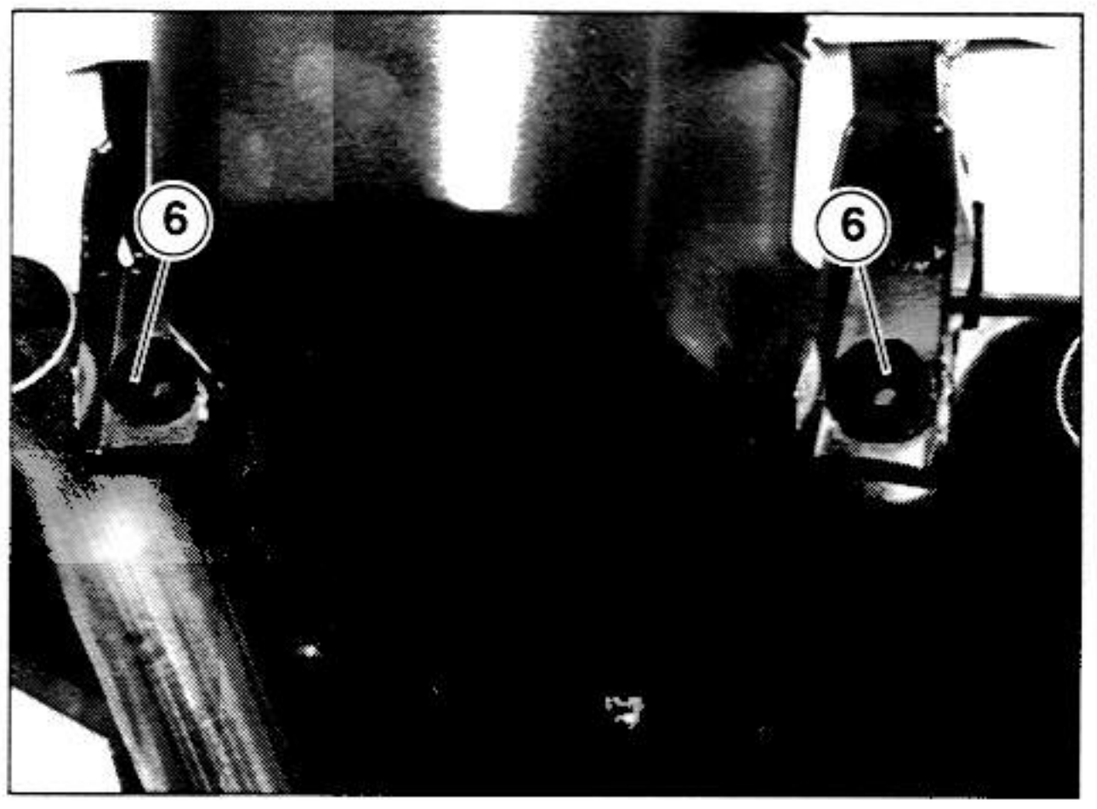

7.1.51 REMOVING THE EXHAUST PIPES

Carefully read 1.3.9 (PRECAUTIONS AND GENERAL INFORMATION).

- Remove the exhaust silencer, see 7.1.50 (REMOVING THE EXHAUST SILENCER).
- Release the two springs (1) from their couplings on the expansion tank.
- Check the two springs (1) and replace if damaged.
- Twist the exhaust pipes (2) back and forth to overcome the resistance of any encrusted build-up.
- Remove the exhaust pipes (2), sliding them upward.

NOTE Plug the drain opening of the expansion tank to keep out any foreign matter.

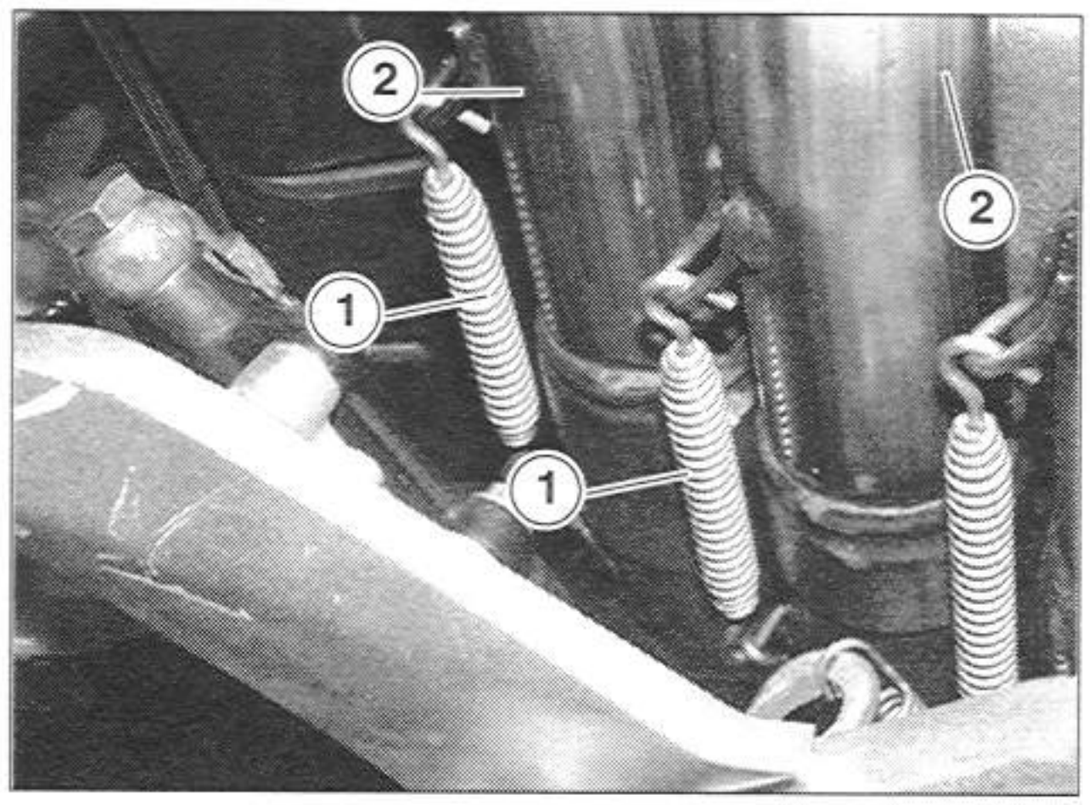

7.1.52 REMOVING THE EXPANSION TANK

Carefully read 1.3.9 (PRECAUTIONS AND GENERAL INFORMATION).

- Remove both lower fairings, see 7.1.33 (REMOVING THE LOWER FAIRING).
- Remove the exhaust pipes, see 7.1.51 (REMOVING THE EXHAUST PIPES).
- Loosen the three nuts (3) so that the rear cylinder exhaust manifold (2) can be moved slightly.

Tightening torque for nuts (3): 18 ftlb (25 Nm).

- Release the two springs (1) from their couplings on the expansion tank (4).
- Unscrew and remove the screw (5).

Tightening torque for screw (5): 18 ftlb (25 Nm).

- Move the expansion tank (4) back and forth to overcome the resistance of any encrusted build-up.
- Slide out the expansion tank (4).

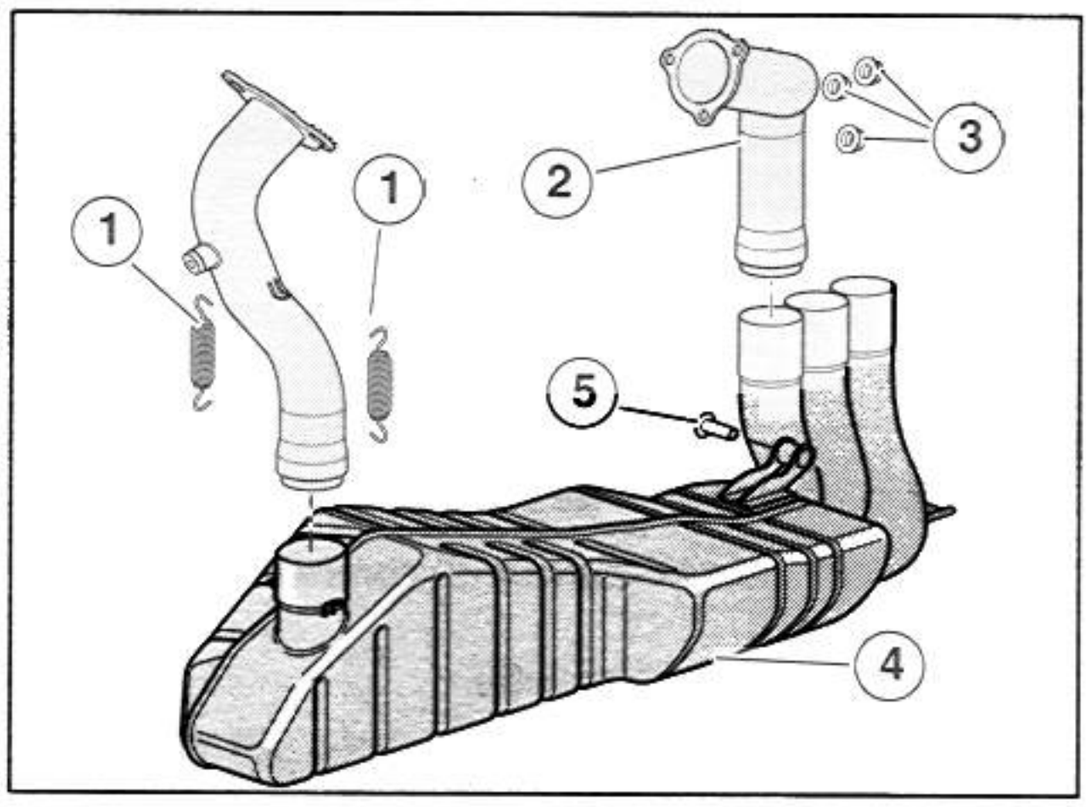

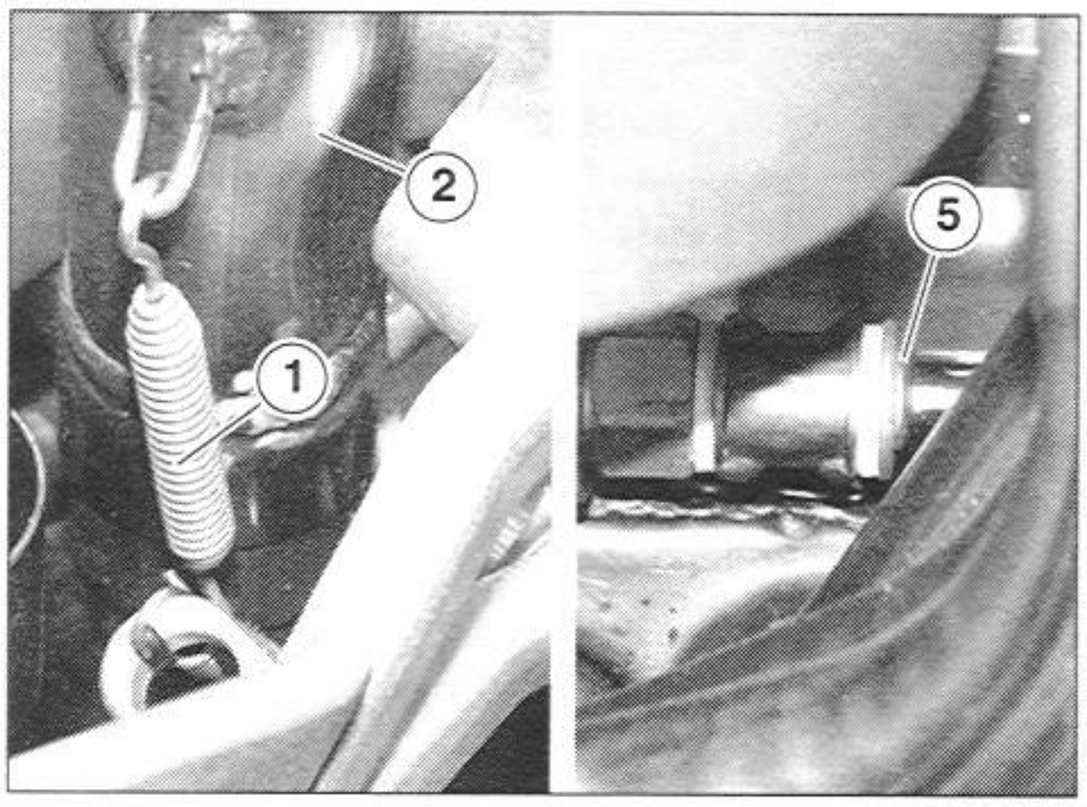

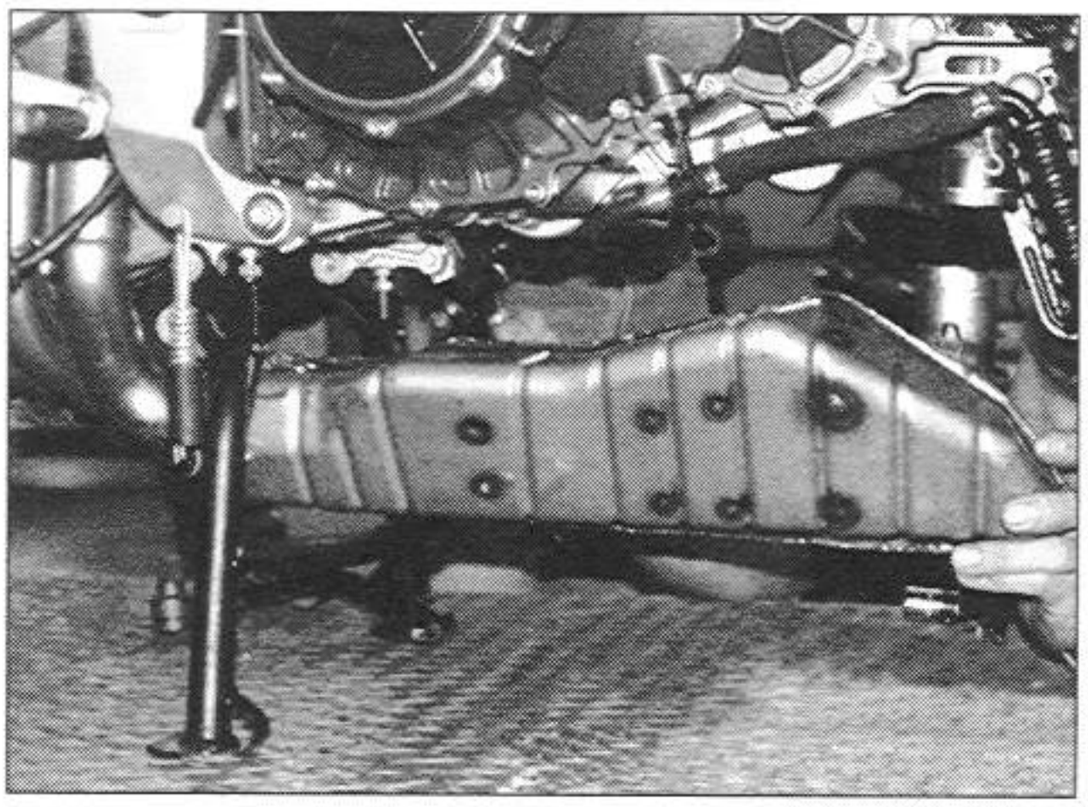

7.1.53 REMOVING THE EXHAUST MANIFOLDS

Carefully read 1.3.9 (PRECAUTIONS AND GENERAL INFORMATION).

- Remove the expansion tank, see 7.1.52 (REMOVING THE EXPANSION TANK).
- Unscrew and remove the three nuts (1) fastening the exhaust manifold flange (2) to the front cylinder.

Tightening torque for nuts (1): 18 ftlb (25 Nm).

- Unscrew and remove the three nuts (3) fastening the exhaust manifold flange (4) to the rear cylinder.

Tightening torque for nuts (3): 18 ftlb (25 Nm).

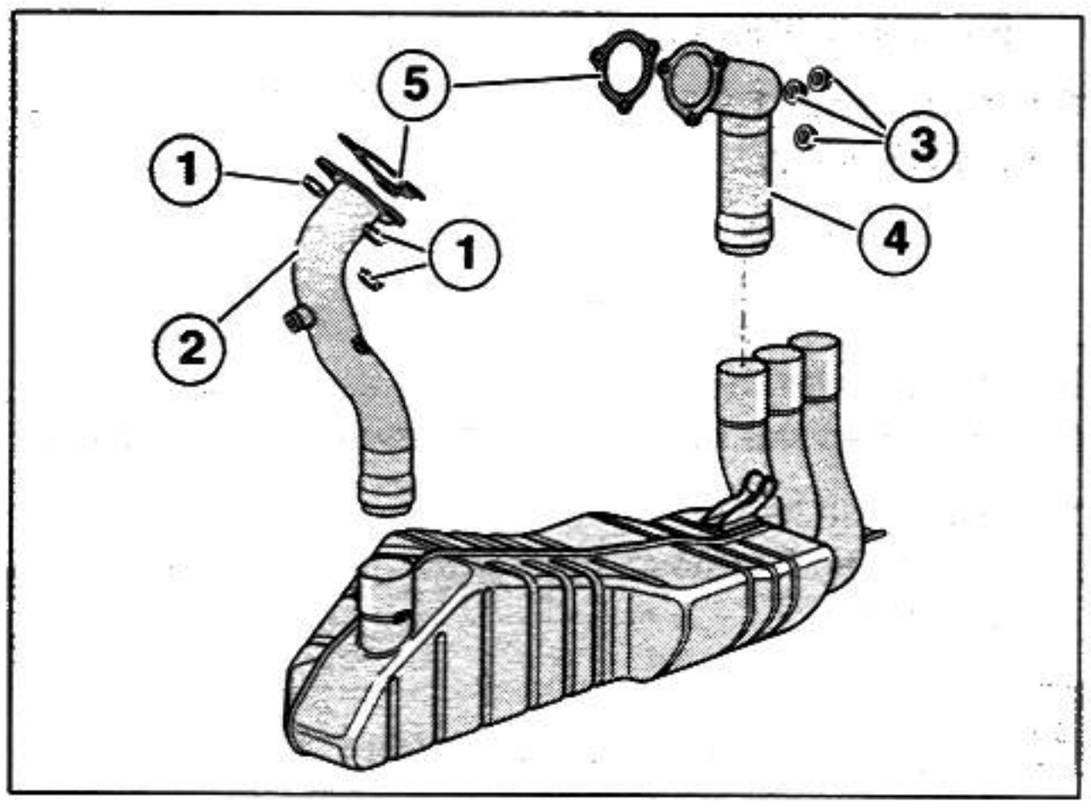

WARNING

When sliding the exhaust manifolds (4-2) out of their cylinders, be very careful to avoid damaging the threads of the studs.

- Rotate the exhaust manifold (4) and remove as shown in the figure.
- Move the exhaust pipe (2) forward until the flange is out of the stud-bolts on the front cylinder.
- Turn the exhaust manifold (2) and remove it.

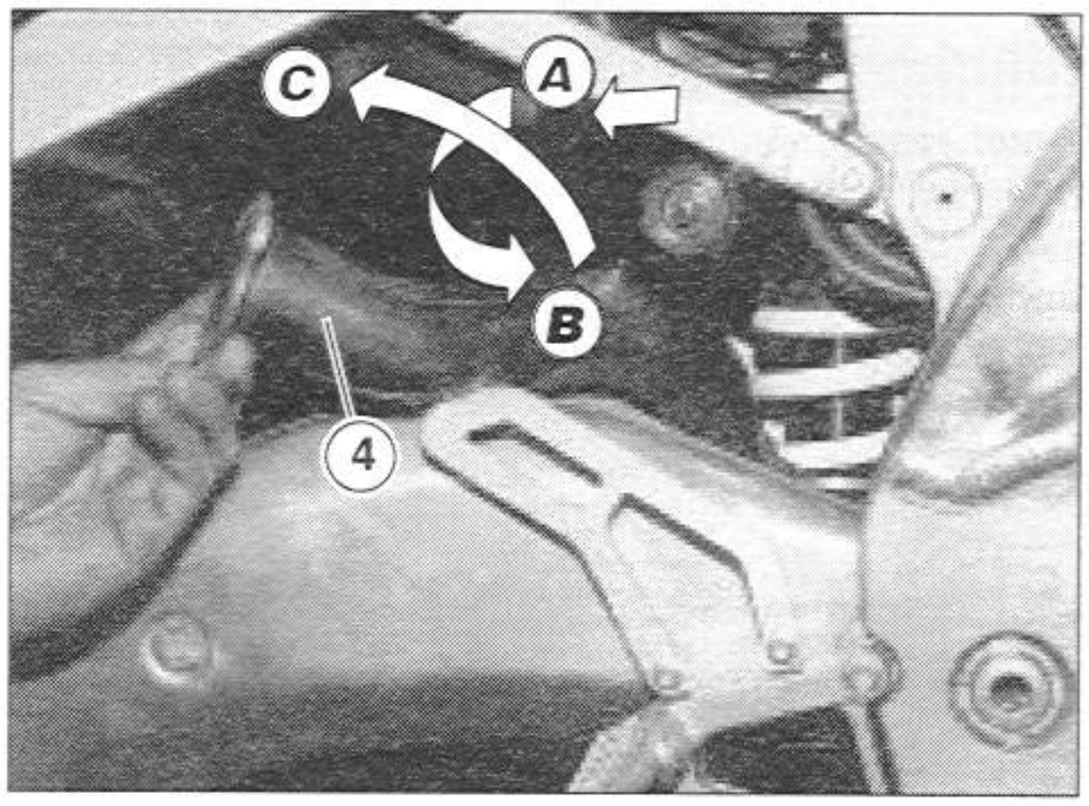

WARNING

Check and replace the gaskets (5), if necessary, with two new ones of the same type.

NOTE Plug the engine exhaust openings to keep out foreign matter.

7.1.54 REMOVING THE SIDE STAND

Carefully read 1.3.9 (PRECAUTIONS AND GENERAL INFORMATION).

- Place the vehicle on the center stand.

⚠ WARNING

Be very careful to avoid damaging the switch (1).
Never loosen the nut (2) with the switch (1) installed.

- Release the two springs (3).
- Unscrew and remove the screw (4) and retrieve the washer (5).

Tightening torque for screw (4): 7.3 ftlb (10 Nm).

- Slide out the switch (1).

⚠ WARNING

When reassembling, place the switch (1) correctly, with the seat inserted in the special rotation-proof pin.
Upon reassembly, apply Loctite® 243 to the switch (1).
Perform this procedure with the side stand retracted.

- Loosen and remove the nut (2).

Tightening torque for nut (2): 18 ftlb (25 Nm).

- Unscrew and remove the pin (6).

Tightening torque for pin (6): 7.3 ftlb (10 Nm).

- Remove the stand (7).

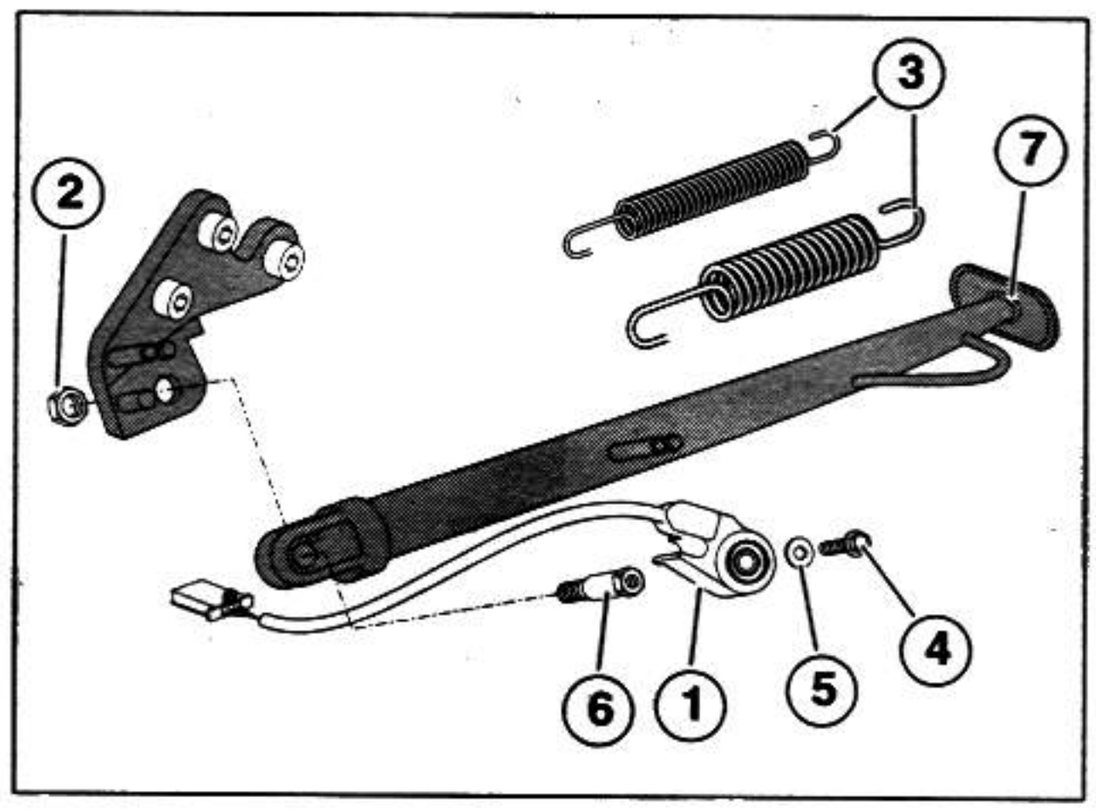

7.1.55 REMOVING THE ENGINE OIL TANK

Carefully read 1.3.9 (PRECAUTIONS AND GENERAL INFORMATION), see 1.4.1 (FUEL) and 1.4.2 (LUBRICANTS).

- Remove the left air inlet duct case, see 7.1.34 (REMOVING THE AIR INLET DUCT CASES).
- Drain out all engine oil, see 2.13 (CHANGING THE ENGINE OIL AND OIL FILTER).

NOTE Use the special click clamp installation pliers (code 0277295); during reassembly, replace each clamp with a new one of the same kind.

- Release the clamps (2-3).
- Remove the couplings (4-5).
- Unscrew and remove the upper fastening screw (6).

Tightening torque for screw (6): 7.3 ftlb (10 Nm).

NOTE Replace the grommet if damaged.

- Loosen and remove the two nuts (7-8).

Tightening torque for nuts (7-8): 3.6 ftlb (5 Nm).

NOTE If the two silent-blocks are damaged, replace them.

- Slide the tank (9) out of the two silent-blocks.
- Release the clamp (10).
- Pull the oil hose (11) out.
- Remove the complete tank (9).
- Unscrew and remove the engine oil filter (12) on the tank, and clean with compressed air.
- Check the seal of the oil tank filter (9), screw on and tighten.
- If necessary, unscrew and remove the two screws (13), remove the level tube (1), and retrieve the seals.

Tightening torque for screws (13): 14.5 ftlb (20 Nm).

NOTE If the level tube and seals gaskets are damaged, replace them.

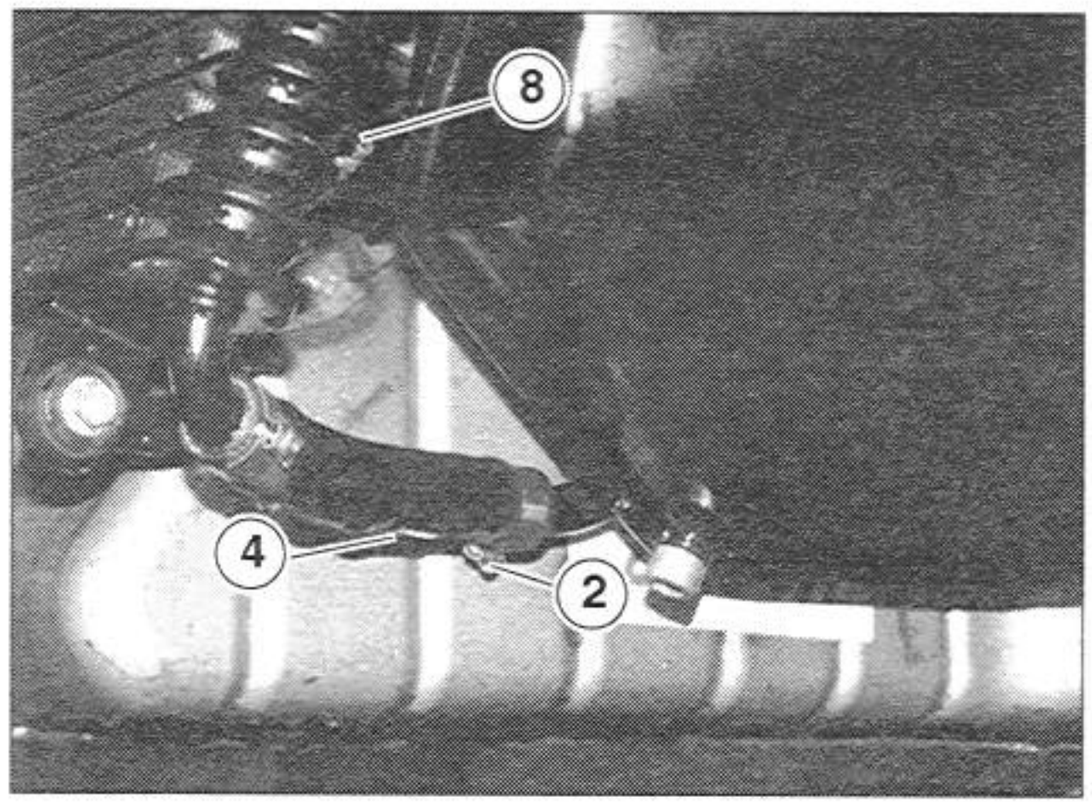

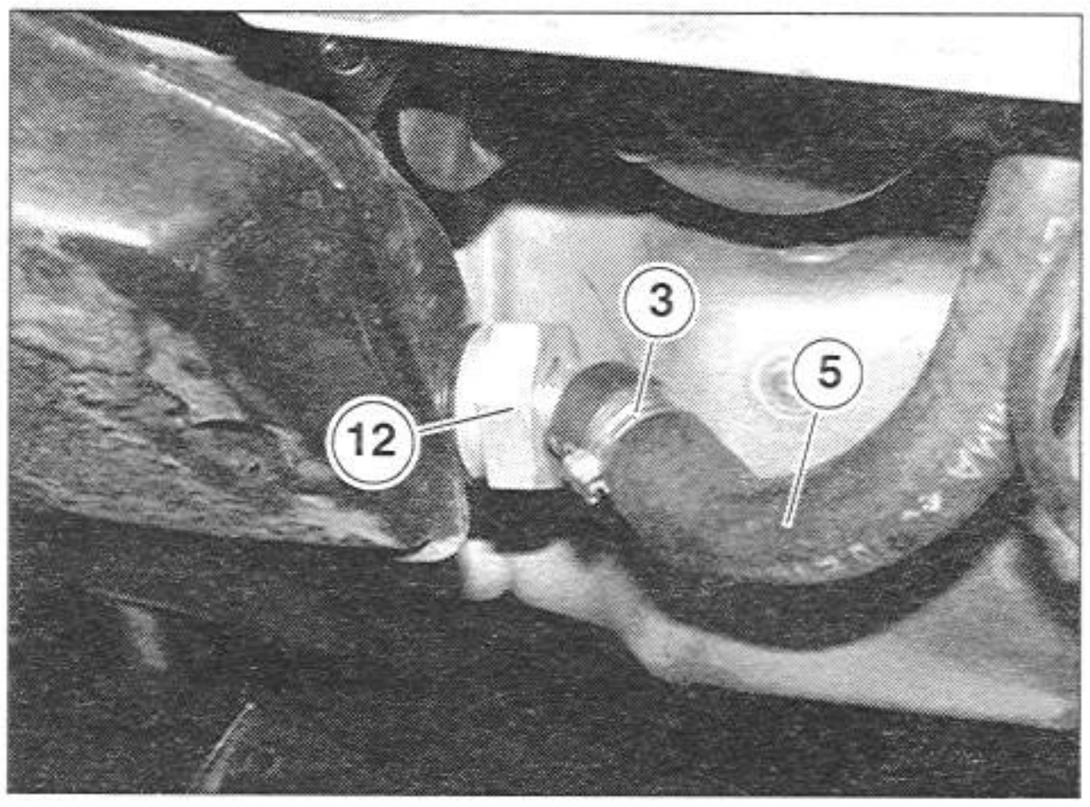

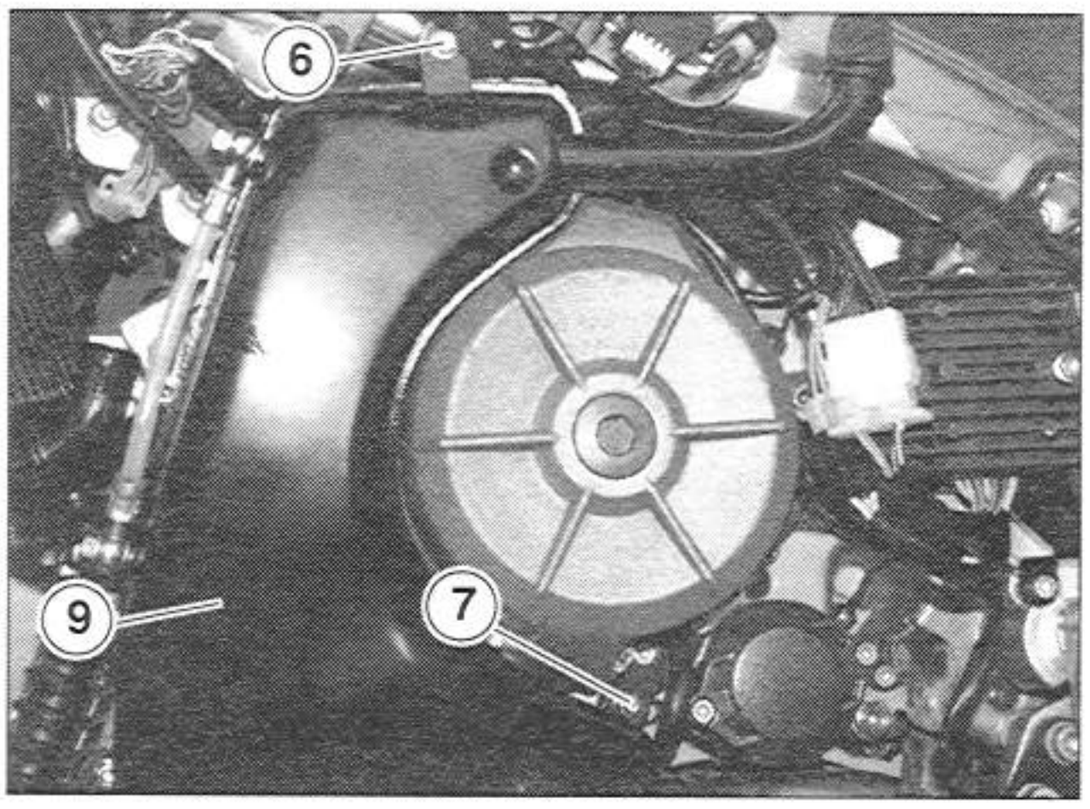

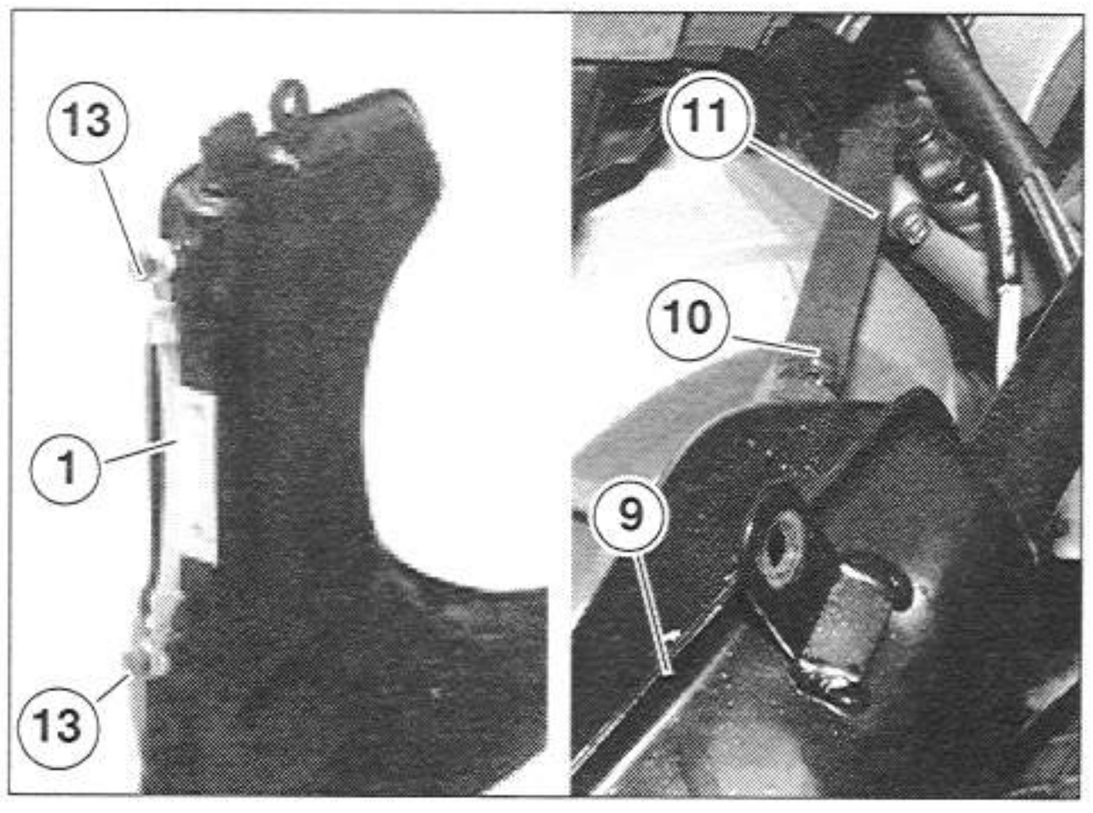

7.1.56 REMOVING THE ENGINE OIL RADIATOR

Carefully read 1.3.9 (PRECAUTIONS AND GENERAL INFORMATION), see 1.4.2 (LUBRICANTS).

- Drain out all engine oil, see 2.13 (CHANGING THE ENGINE OIL AND OIL FILTER).

NOTE Use the special click clamp installation pliers (code 0277295); during reassembly, replace each clamp with a new one of the same kind.

- Release the clamps (2-3).
- Remove the couplings (4-5).
- Unscrew and remove the three fastening screws (6-7-8).

Tightening torque for screws (6-7-8): 7.3 ftlb (10 Nm).

NOTE Replace the grommets if damaged.

- Remove the radiator (1).

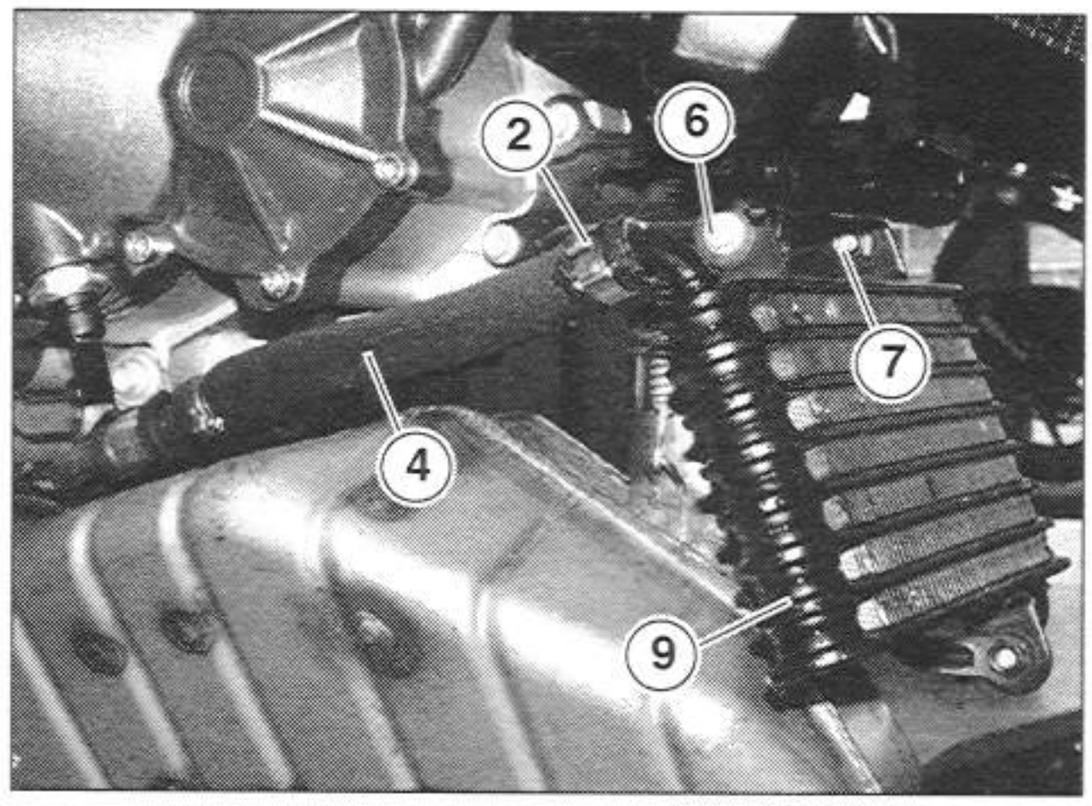

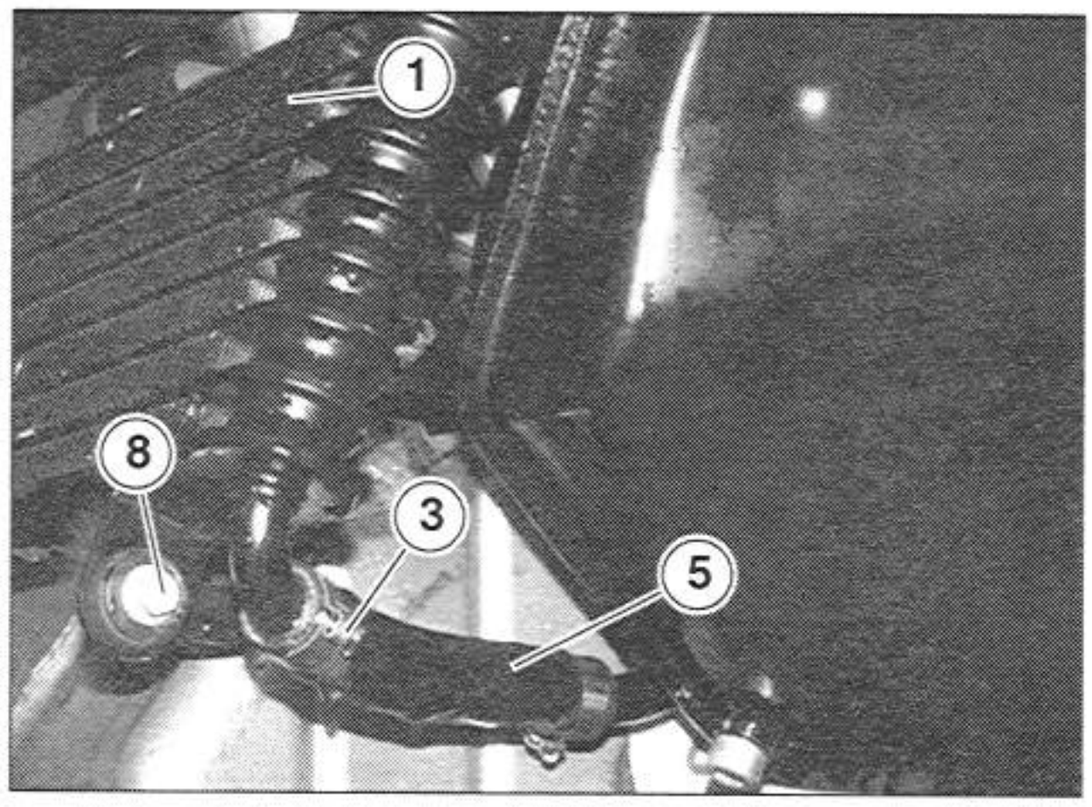

7.1.57 REMOVING THE DRIVE CHAIN SHOE

- Remove the guide plate, see 2.35.4 (INSPECTING THE DRIVE CHAIN GUIDE PLATE).

NOTE Engage first gear to block rotation of the countershaft sprocket (4) and allow you to unscrew the screw (1).

- Unscrew and remove the screw (1) retrieving the two washers (2-3).

NOTE When reassembling, apply LOCTITE® 243 to the thread of the screw (1).

Tightening torque for screw (1): 36 ftlb (50 Nm).

NOTE To make it easier to remove the countershaft sprocket (4), slightly loosen the chain tension, see 2.35.3 (ADJUSTING THE DRIVE CHAIN).

- Slide the drive countershaft sprocket (4) from the shaft, complete with chain.
- Remove the drive countershaft sprocket (4).

NOTE When reassembling, apply LOCTITE® Anti-Seize on the internal spline of the countershaft sprocket (4).

- Remove the upper chain housing, see 7.1.58 (REMOVING THE UPPER CHAIN HOUSING).
- Unscrew and remove the screws (5-6).

Tightening torque for screws (5-6): 2.9 ftlb (4 Nm).

- Remove the shoe (7), pulling it out from the front.

NOTE When reassembling, correctly position the slot in the shoe (7) over the seat (8) on the swinging arm, and apply LOCTITE® 243.

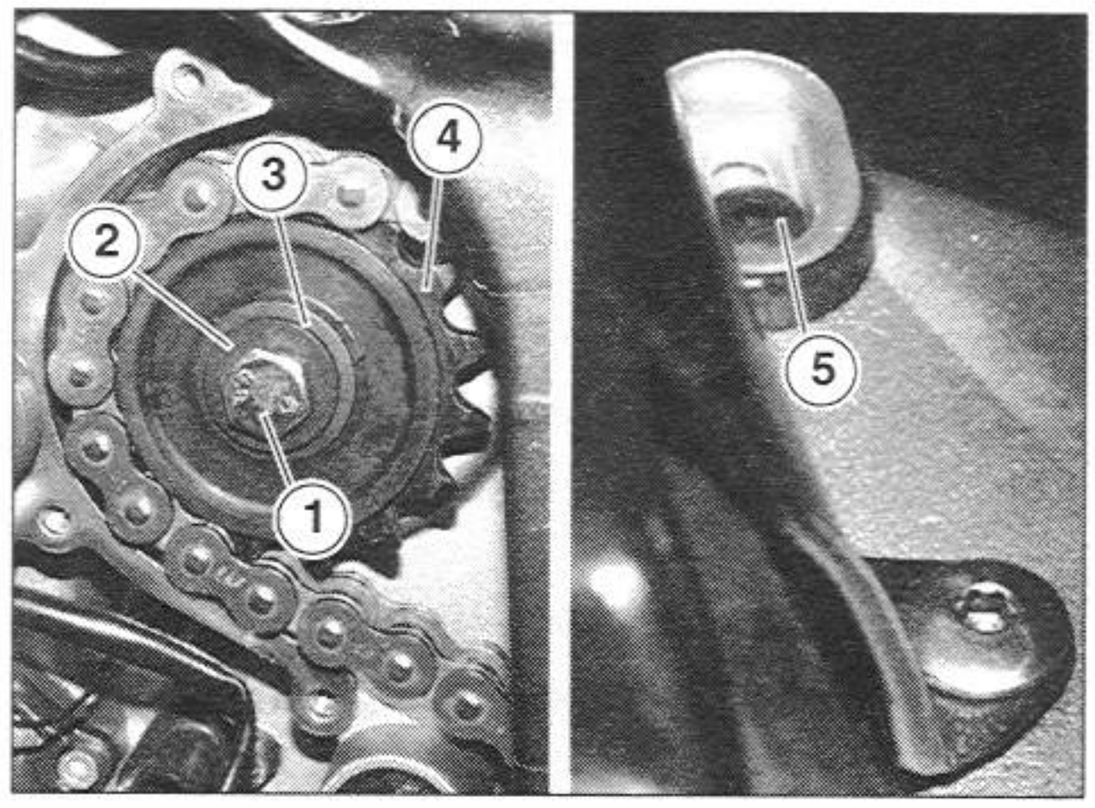

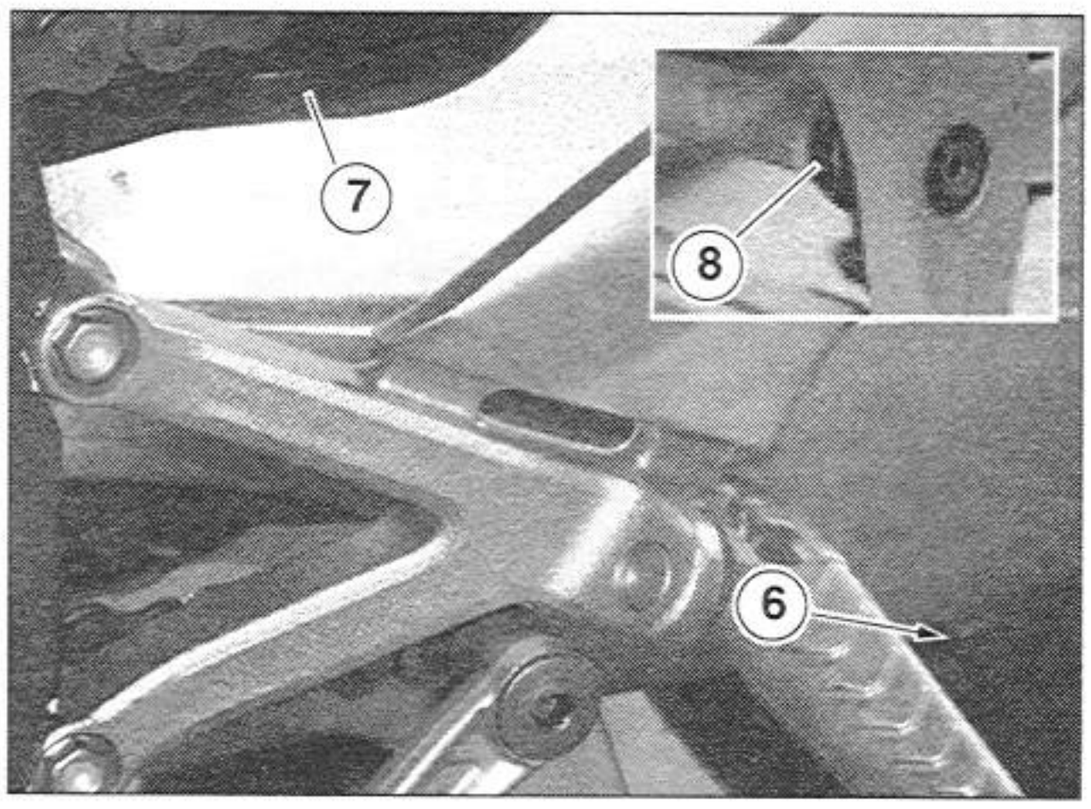

7.1.58 REMOVING THE UPPER CHAIN HOUSING

Carefully read 1.3.9 (PRECAUTIONS AND GENERAL INFORMATION).

- Place the vehicle on the center stand.
- Unscrew and remove the screw (1).

Tightening torque for screw (1): 2.9 ftlb (4 Nm).

- Unscrew and remove the screw (2).

Tightening torque for screw (2): 2.9 ftlb (4 Nm).

- Unscrew and remove the screw (3).

Tightening torque for screws (3): 2.9 ftlb (4 Nm).

- Unscrew and remove the two screws (4).

Tightening torque for screws (4): 2.9 ftlb (4 Nm).

- Remove the line fastener (5) by lifting it out.
- Remove the outer guard (7).
- Move the odometer cable and rear brake line from the upper chain housing (6).
- Remove the upper chain housing (6) by sliding it out from behind.

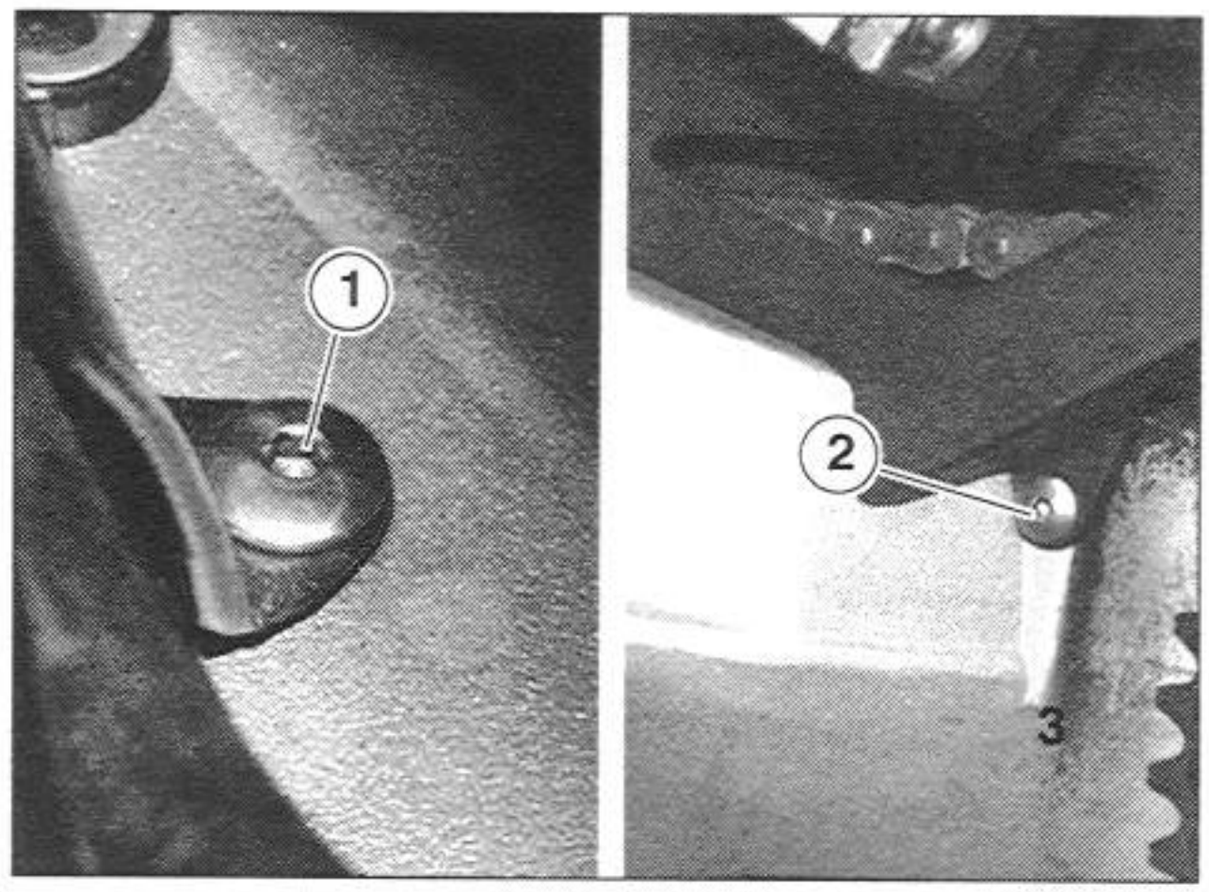

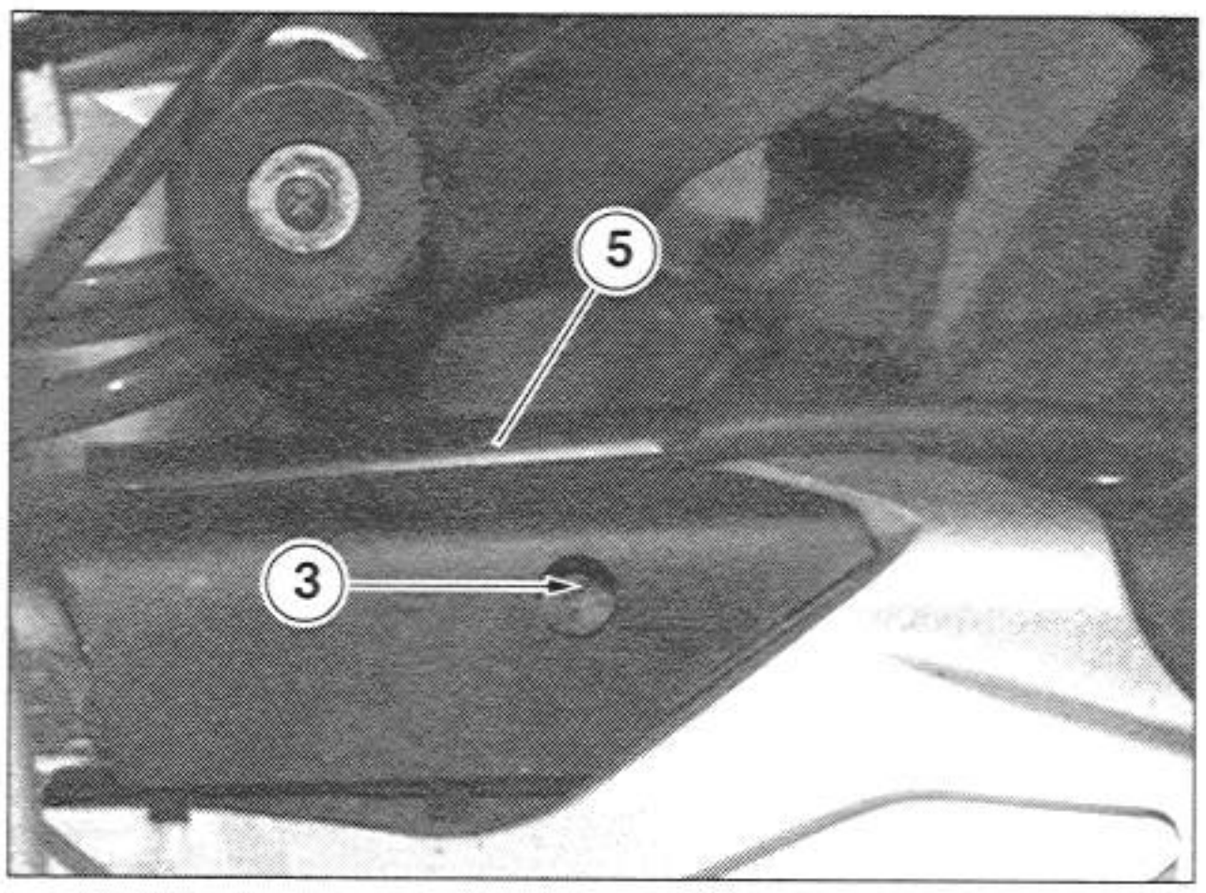

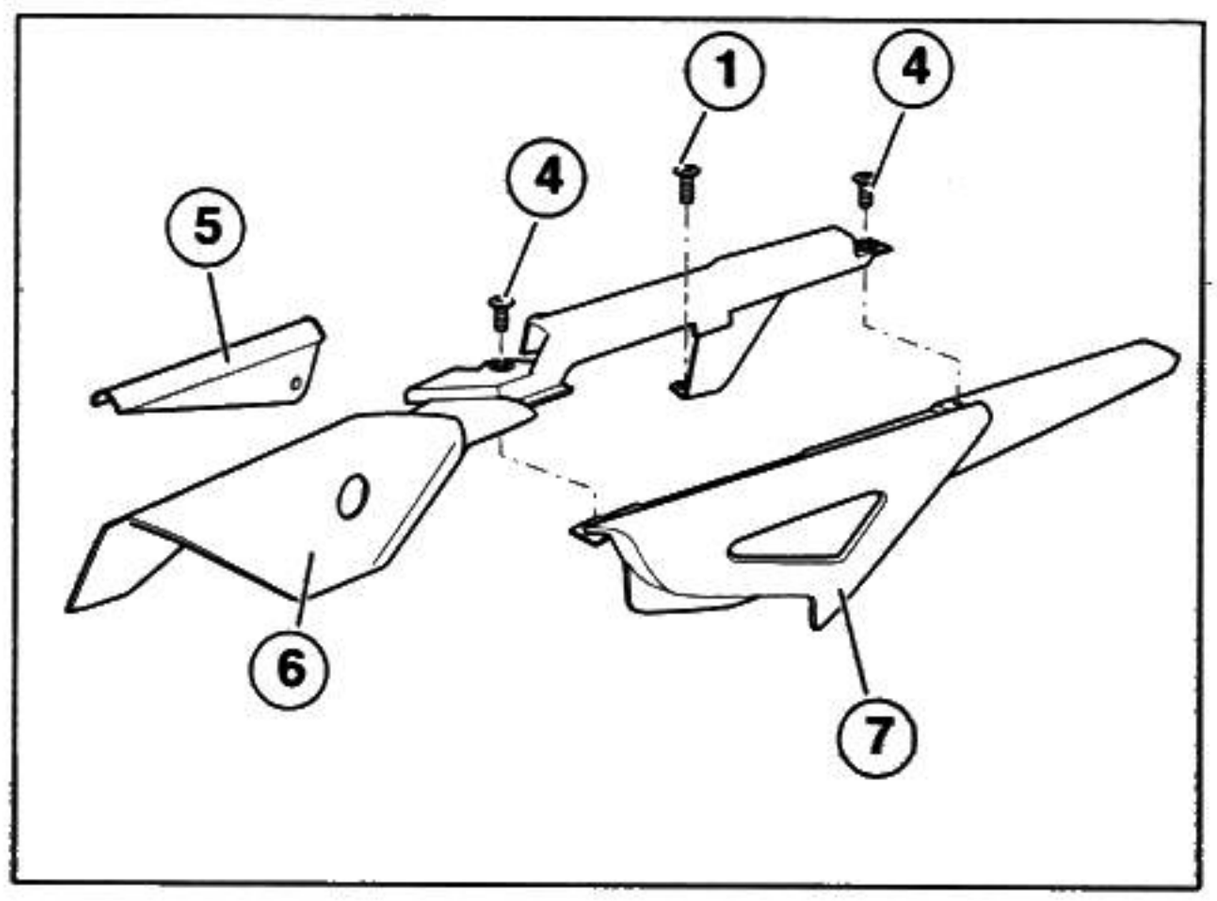

7.1.59 REMOVING THE REAR HOUSING

Carefully read 1.3.9 (PRECAUTIONS AND GENERAL INFORMATION).

- Place the vehicle on the center stand.
- Remove the saddle support lower molded cover, see 7.1.41 (REMOVING THE SADDLE SUPPORT LOWER MOLDED COVER).
- Unscrew and remove the two screws (3).
- Unscrew and remove the four screws (1) fastening the rear subframe (2) to the frame.

Tightening torque for screws (4): 18 ftlb (25 Nm).

- Remove the rear housing (2), sliding it out from the back.

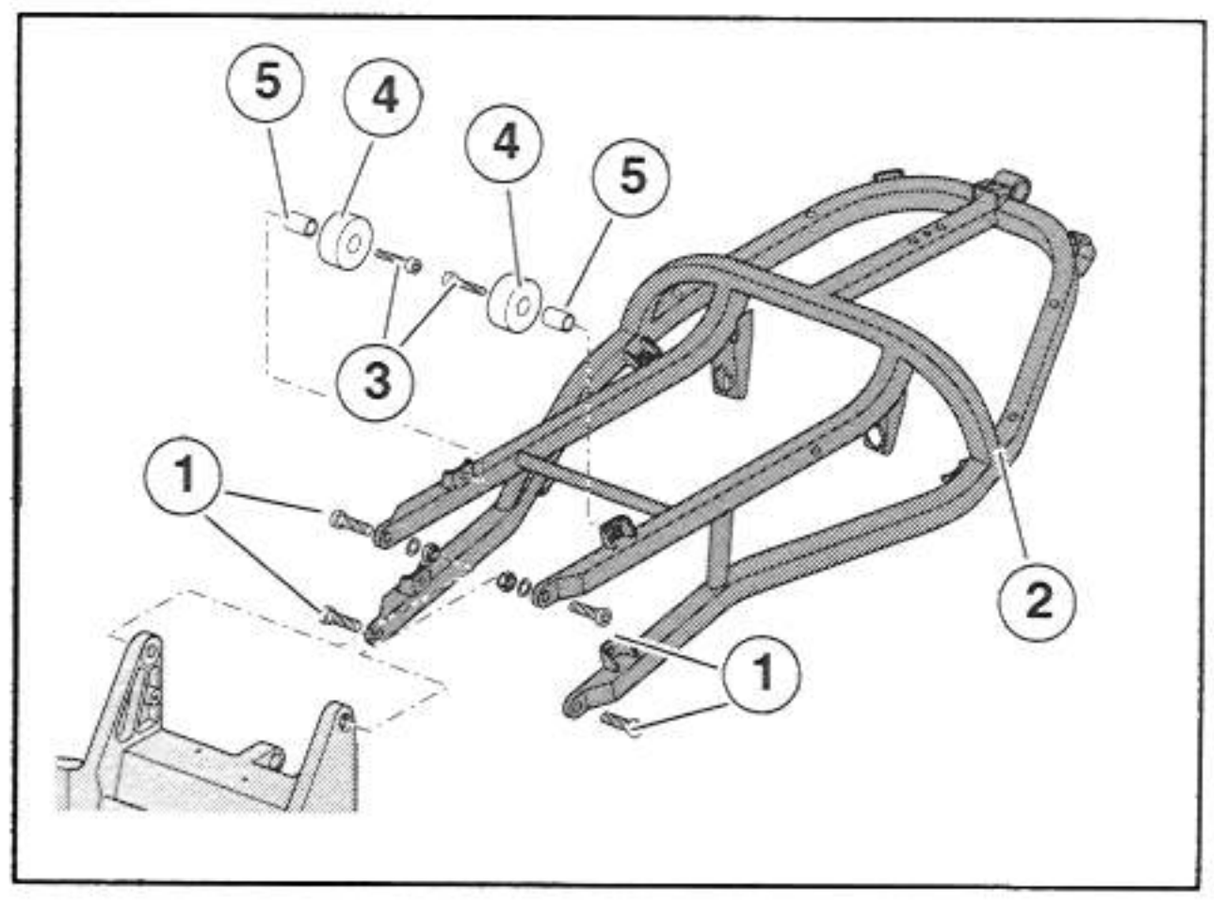

NOTE If necessary, remove the components fastened to the rear housing (2), i.e.:

- Remove the two tank rotation grommets (4), retrieving the two spacers (5).
- Remove the passenger footrest supports, see 7.1.43 (REMOVING THE PASSENGER FOOTREST SUPPORTS).

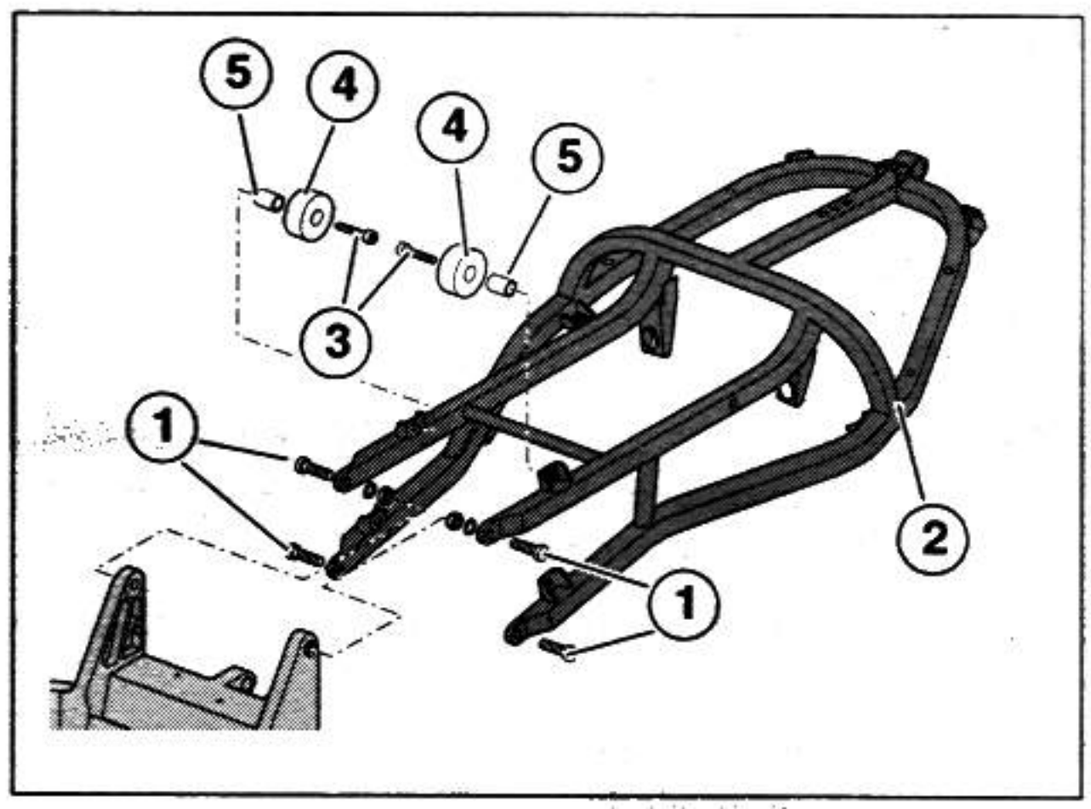

7.1.60 REMOVING THE FRAME

⚠ WARNING

The frame (1) must be removed only at an Authorized Service Center or by an Aprilia Dealer.

Carefully read 1.3.9 (PRECAUTIONS AND GENERAL INFORMATION).

⚠ WARNING

Removing the frame (1) is a particularly complex operation. Therefore, inspect the vehicle carefully before proceeding. This chapter lists the procedures progressively and in sequential order.
Use common sense to interpret any overlap in cross-referenced instructions, to avoid unnecessarily removing components.
Perform only those operations needed to remove the component in question.

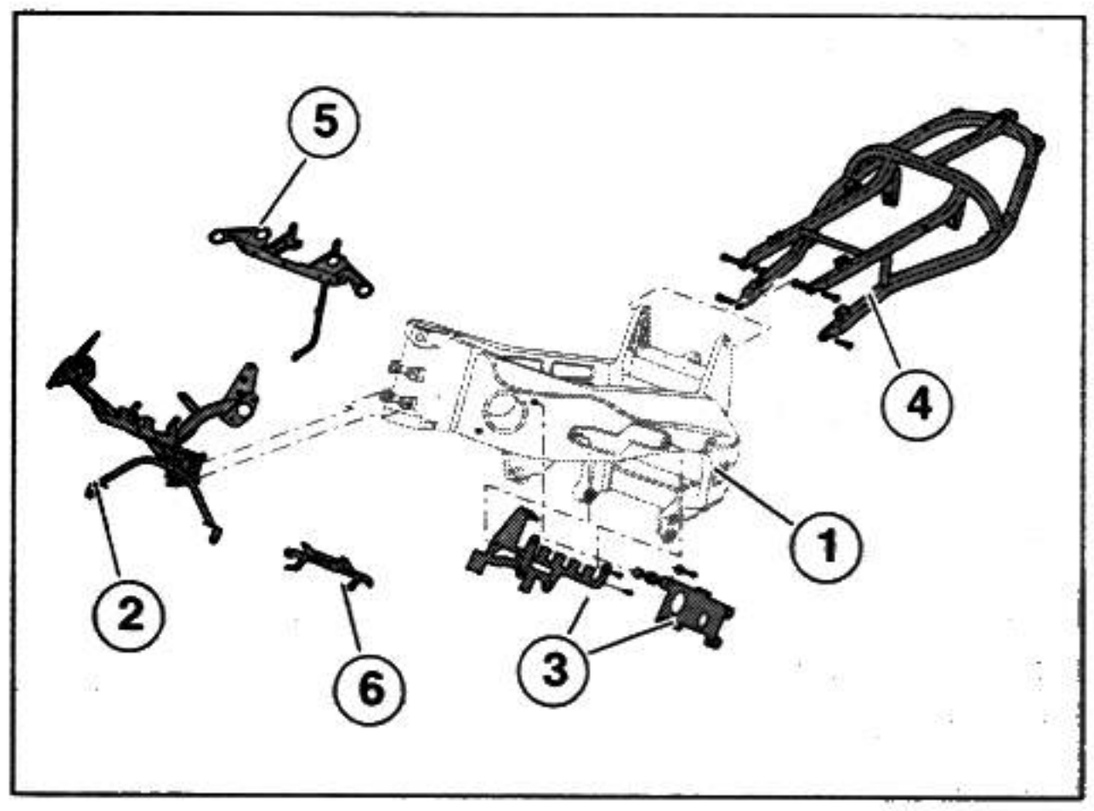

- Remove the engine, see 3.3 (REMOVING THE COMPLETE ENGINE FROM THE FRAME).
- Place the vehicle on the appropriate central support stand OPT, see 1.15.2 (PLACING THE VEHICLE ON THE CENTER SUPPORT STAND).
- Remove the front fork complete with front wheel, see 7.1.1 (REMOVING THE SADDLE).
- Remove the dashboard mount, see 7.1.25 (REMOVING THE DASHBOARD/FRONT FAIRING MOUNT).
- Remove the air inlet duct cases, see 7.1.34 (REMOVING THE AIR INLET DUCT CASES).
- Remove the complete rear housing (4), see 7.1.59 (REMOVING THE REAR HOUSING).
- Remove the rear drive train complete with rear wheel, see 7.9.1 (REMOVING THE SWINGING ARM).
- Remove rear shock absorber, see 7.10.1 (REMOVING THE SHOCK ABSORBER).
- Remove the control unit mount (3).
- ★ Disconnect the terminals from the ignition coils.

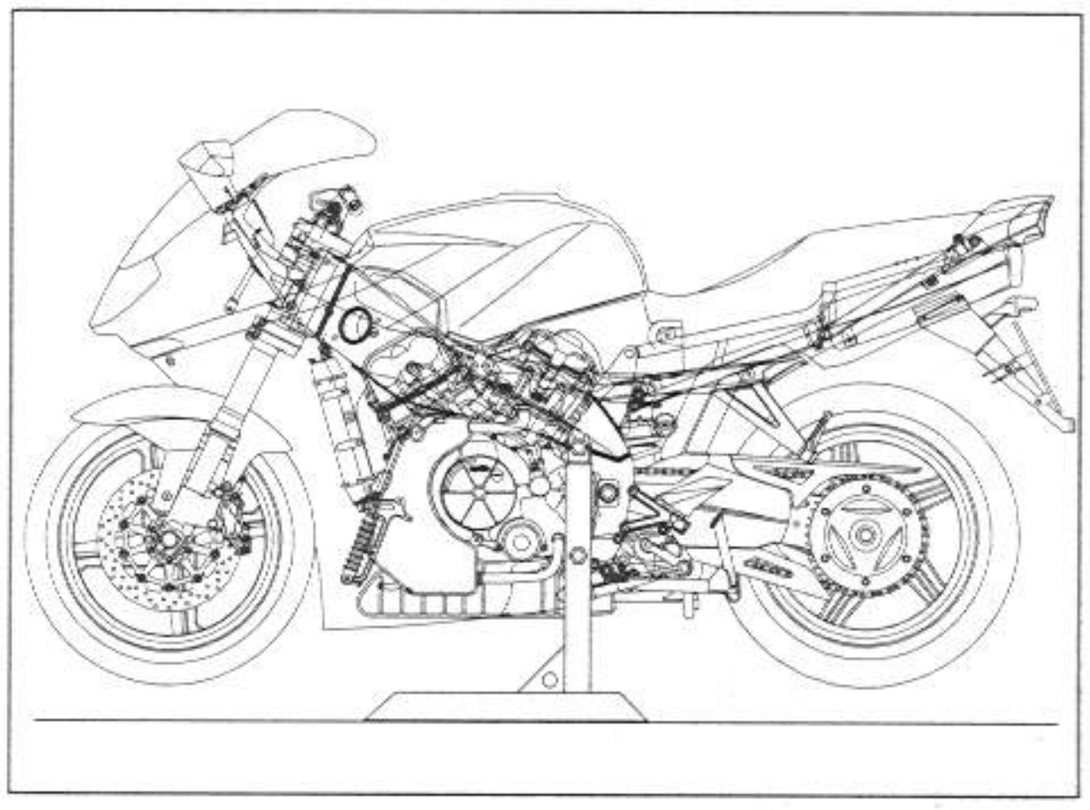

⚠ WARNING

When reassembling, make sure the electrical terminals are properly fitted.

- Recover the fairing support plate (5).

NOTE Be extremely careful while removing the control unit support, to avoid damaging the control unit.

- Remove the radiator mount (6).
- Remove both of the rider footrest supports, see 7.1.45 (REMOVING THE LEFT RIDER FOOTREST SUPPORT) and see 7.1.46 (REMOVING THE RIGHT RIDER FOOTREST SUPPORT).

NOTE Release all cables from the clamps holding them in place along their path. Have the same number of clamps ready to use when reassembling.

- Disconnect the electrical connector for the side stand switch.

NOTE When reassembling, make sure the electrical connector is fitted properly.

NOTE Be extremely careful while removing the side stand support (8), to avoid damaging the switch.

- Unscrew and remove the three screws (7) and remove the side stand support (8), complete with side stand and switch.

Tightening torque for screws (7): 29 ftlb (40 Nm).

- Sling the frame (1) appropriately, and hook the slings to a hoist for support.

NOTE The slings and hoist must be sufficient to safely support the entire frame (1).
Frame weight: 21.8 lb (9.9 Kg).

- Raise the frame (1) just enough to be able to remove the center support stand OPT.
- Remove the center stand.

When you have finished re-installing the frame, proceed as follows:

- Make sure that all components are correctly fastened.
- Make sure the cables and wiring are properly placed and firmly fastened in place.
- Make sure the electrical connectors are properly fitted.
- Make sure that no cables or lines are pulled when turning the handlebars.

⚠ DANGER

After the motorcycle is reassembled, turn the forks to the full left and right positions with the engine running. If turning from lock to lock causes any change in the idle speed, the throttle cables are improperly installed or adjusted. This problem must be rectified before the motorcycle is used. Failure to observe this WARNING can lead to a stuck throttle or engine runaway, with subsequent upset, accident, serious injury, or even death.

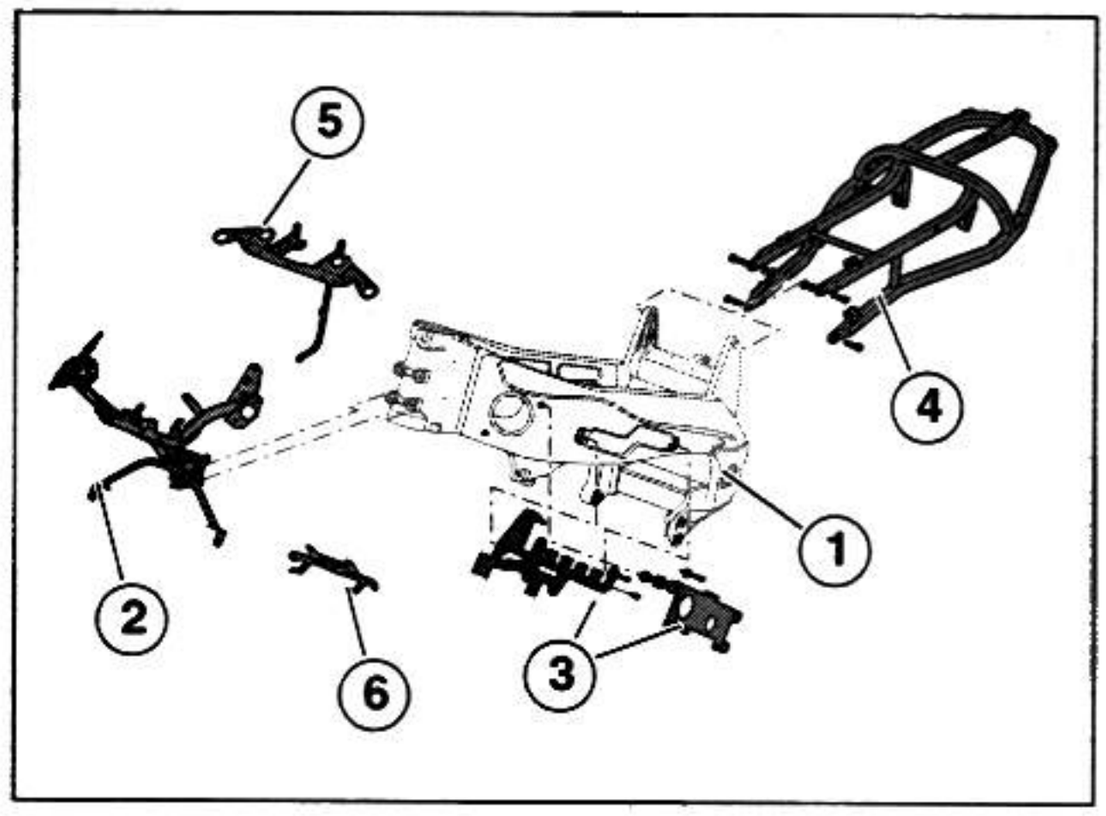

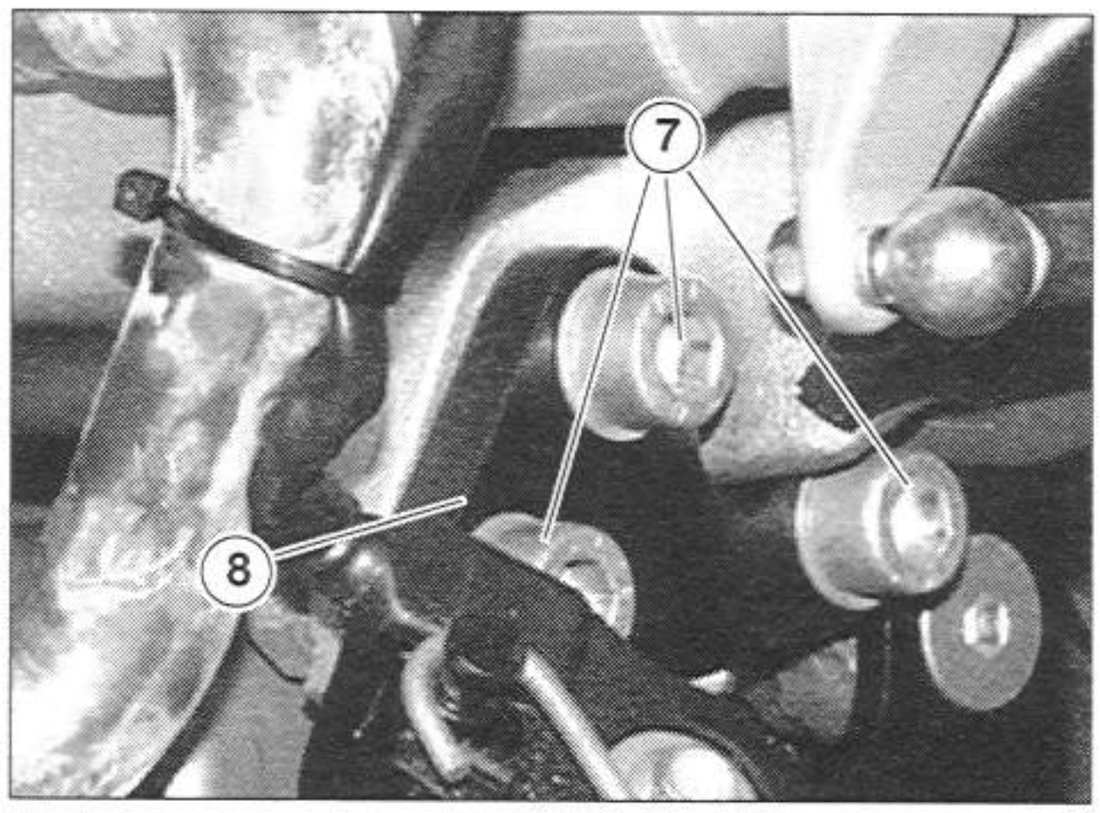

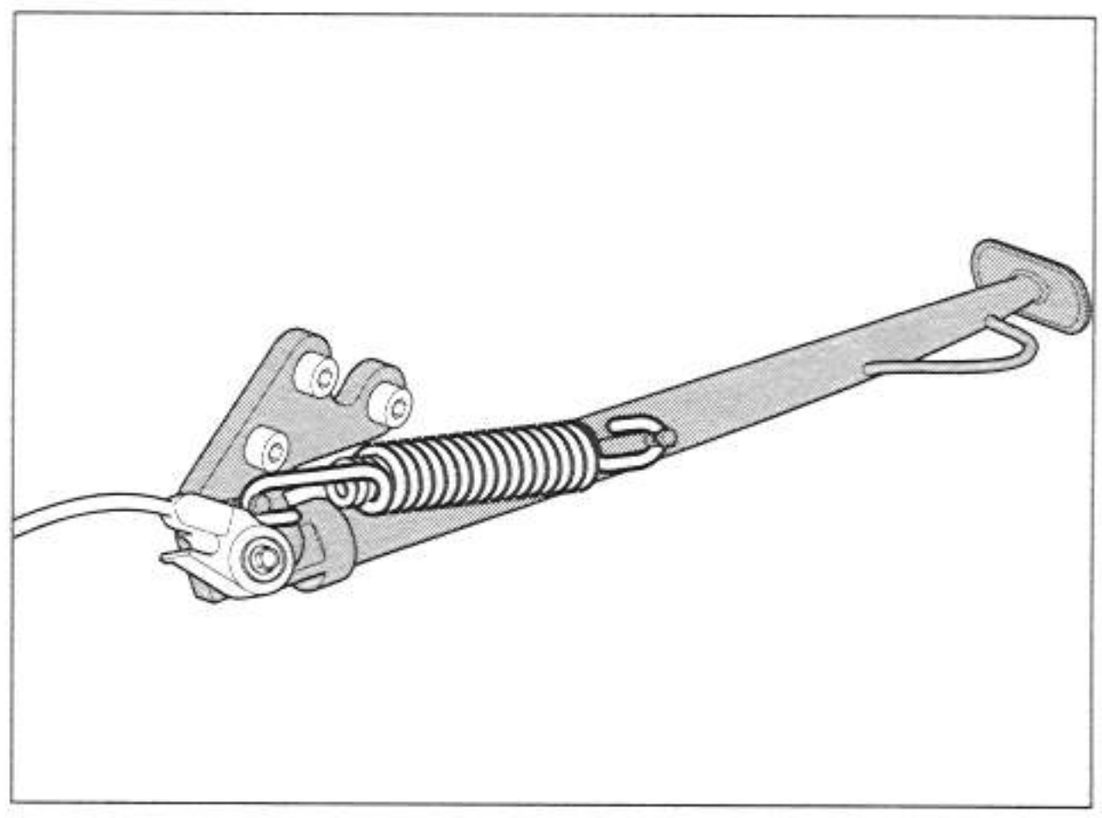

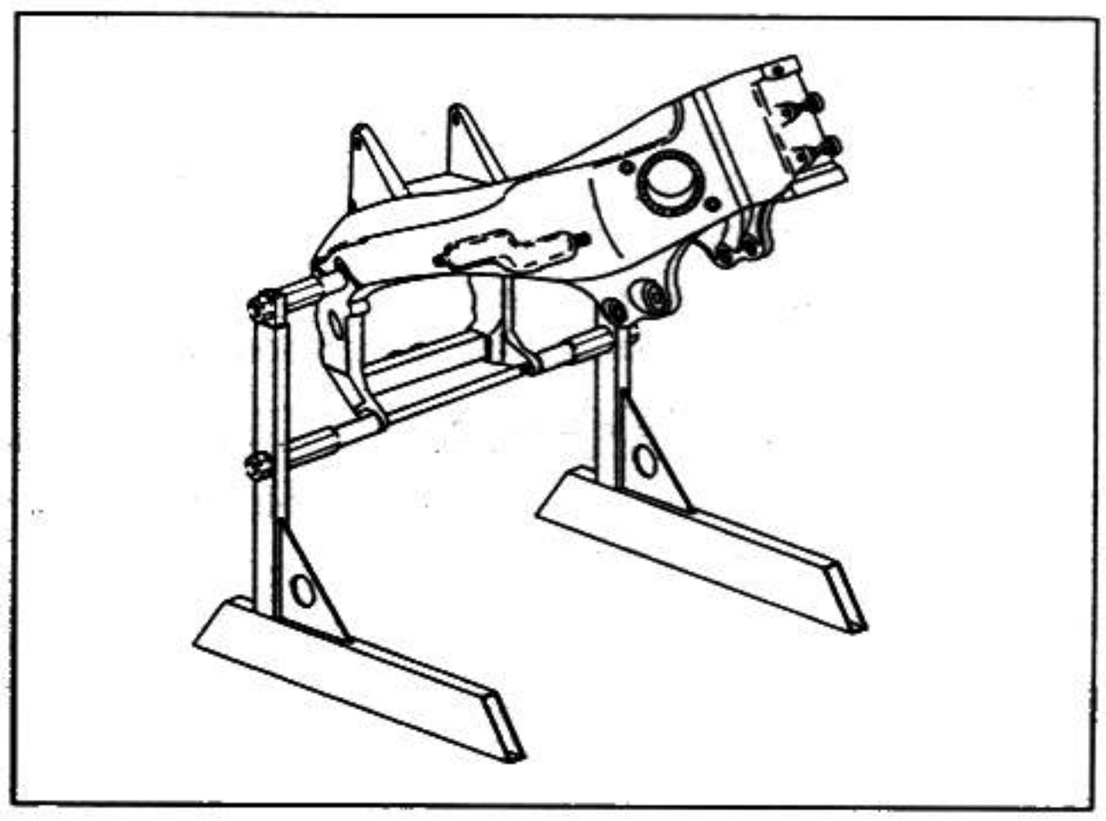

7.2 FRONT WHEEL

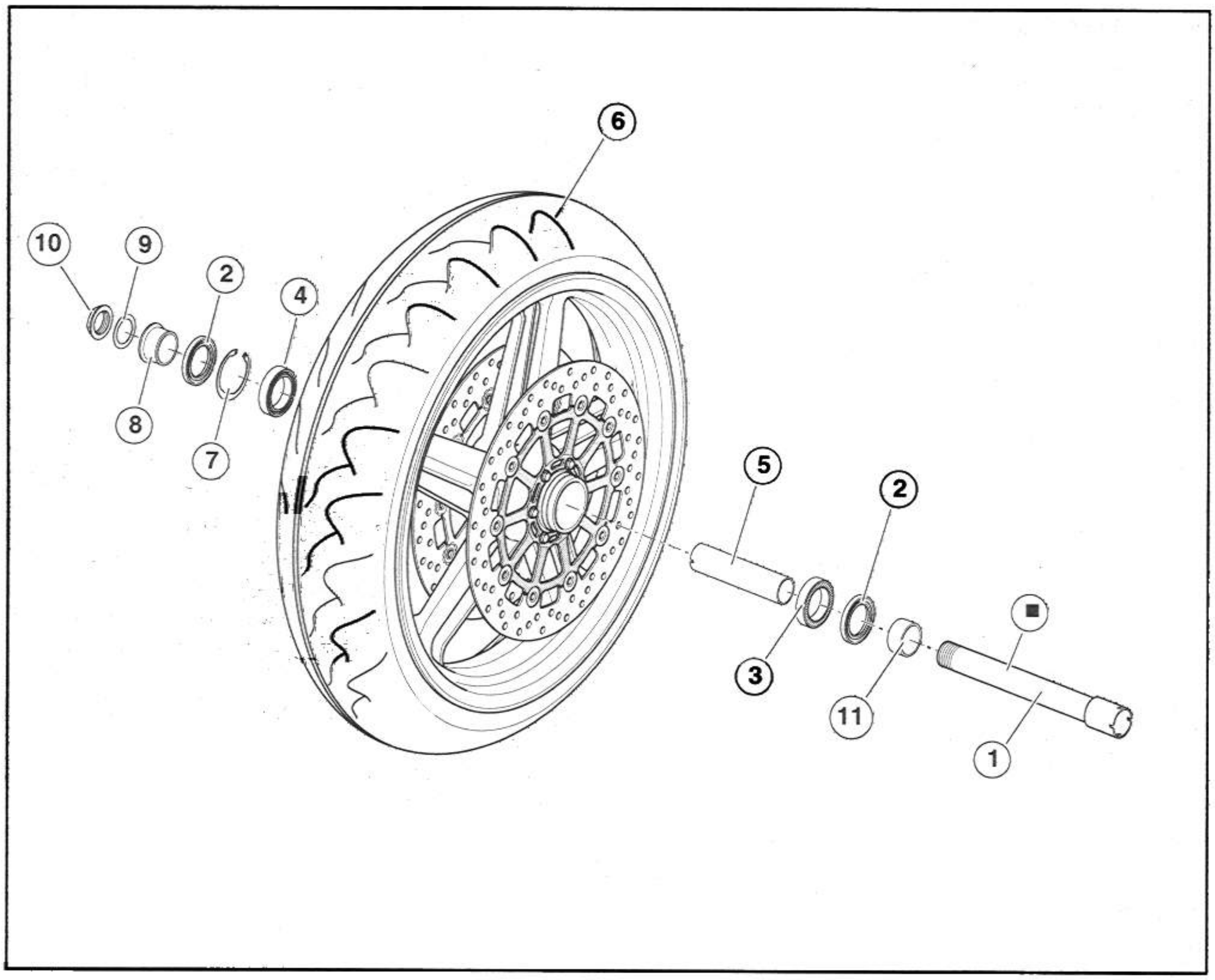

Legend

1) Wheel axle nut
2) Seal
3) Seal
4) Bearing
5) Internal spacer
6) Complete wheel
7) Circlip
8) Right spacer
9) Washer
10) Nut
11) Left spacer

■= GREASE, see 1.12 (LUBRICANT CHART).

7.2.1 REMOVING THE COMPLETE WHEEL

Carefully read 1.3.9 (PRECAUTIONS AND GENERAL INFORMATION) and 2.32 (FRONT WHEEL)).

⚠ WARNING

During disassembly, take care not to damage the brake lines, discs and pads.

- Place the vehicle on the front support stand OPT, see 1.15.1 (PLACING THE VEHICLE ON THE FRONT SUPPORT STAND)

⚠ WARNING

Make sure the vehicle is stable.

- Have someone hold the handlebars steady, in riding position, so that the steering is blocked.
- ★Unscrew and remove the two screws (1) holding the front brake caliper (2).

Tightening torque for brake caliper screws (1): 36.8 ftlb (50 Nm).

- ★Slide the brake caliper (2) from the disc, leaving it attached to the brake line.

⚠ WARNING

Do not work the front brake lever after removing the caliper pistons, otherwise the clamp pins could come out of their housings, causing brake fluid to leak out.

- Loosen and remove the nut (4), and retrieve the washer.

Tightening torque for wheel axle nut (4): 59 ftlb (80 Nm).

- Partially loosen the two axle clamp screws (5).

Tightening torque for the axle clamp screws (5): 16.2 ftlb (22 Nm).

- Slide the axle (3) out from the left.
- Remove the wheel, pulling it out from the front, and retrieving the left spacer (6).
- If necessary, dismantle the wheel completely, see 7.2.2 (DISMANTLING THE WHEEL).

⚠ DANGER

Never attempt to line up the wheel while reinstalling it with your fingers. Use only a tapered bar or the front axle itself. Failure to observe this WARNING can result in serious personal injury to you, including amputation of your fingers.

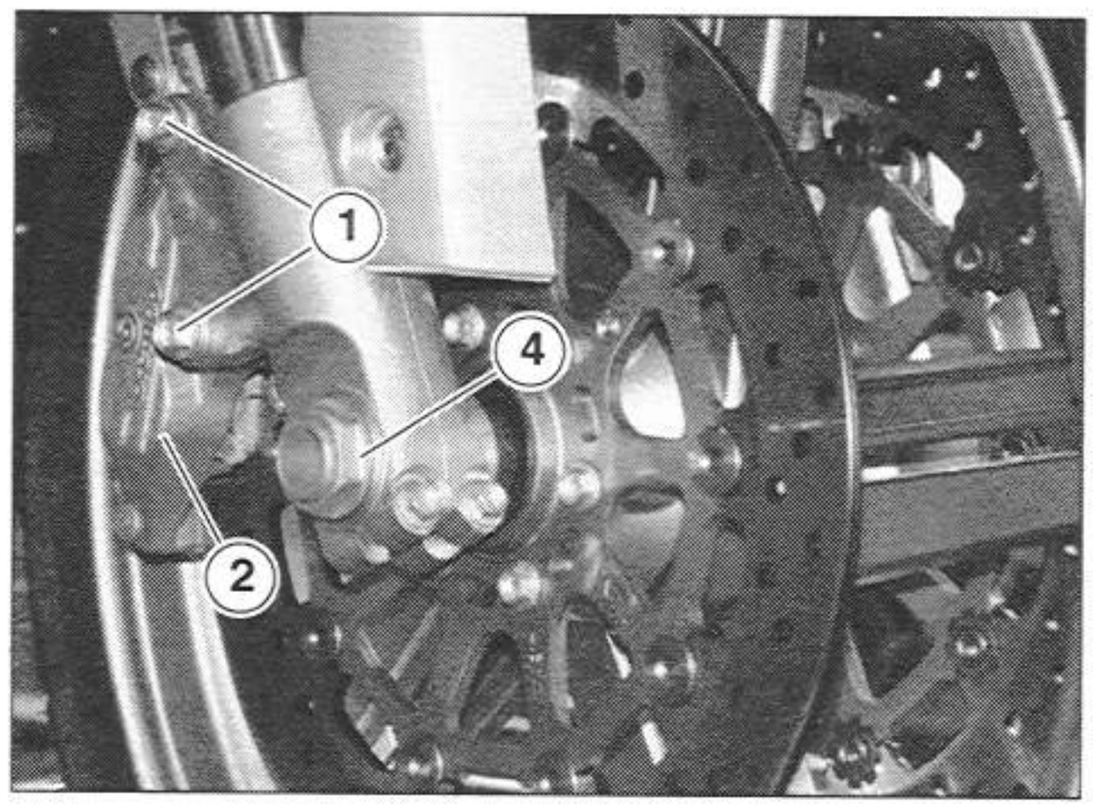

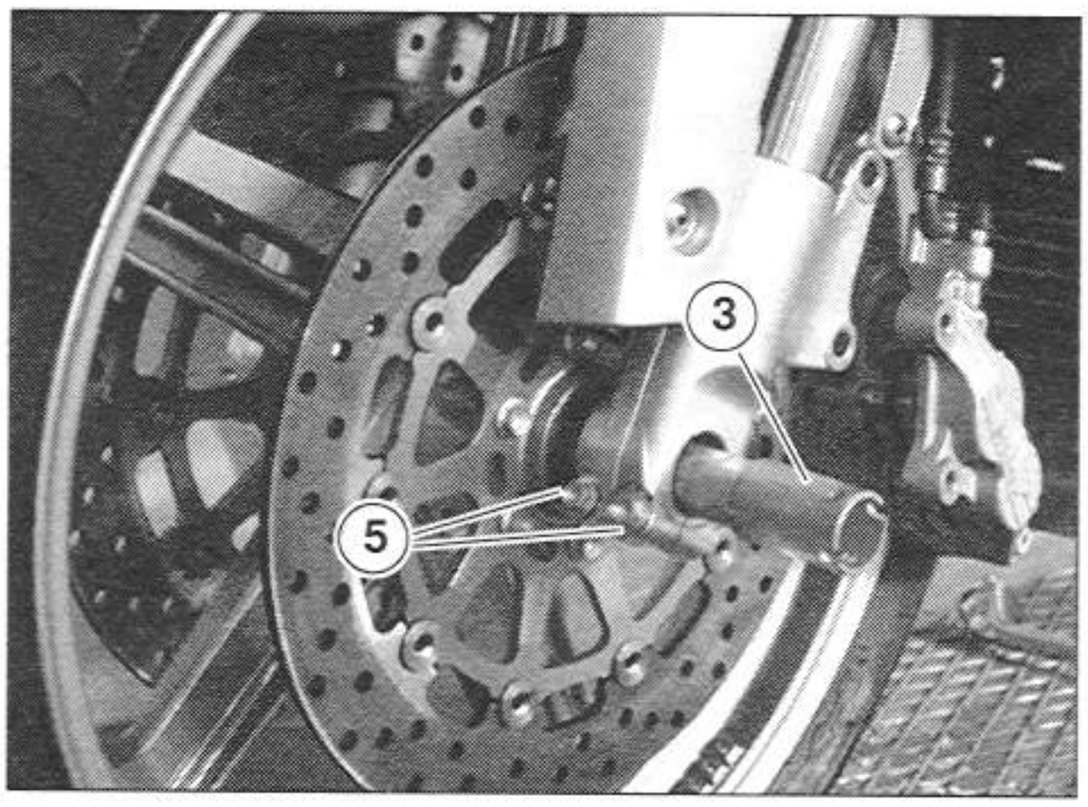

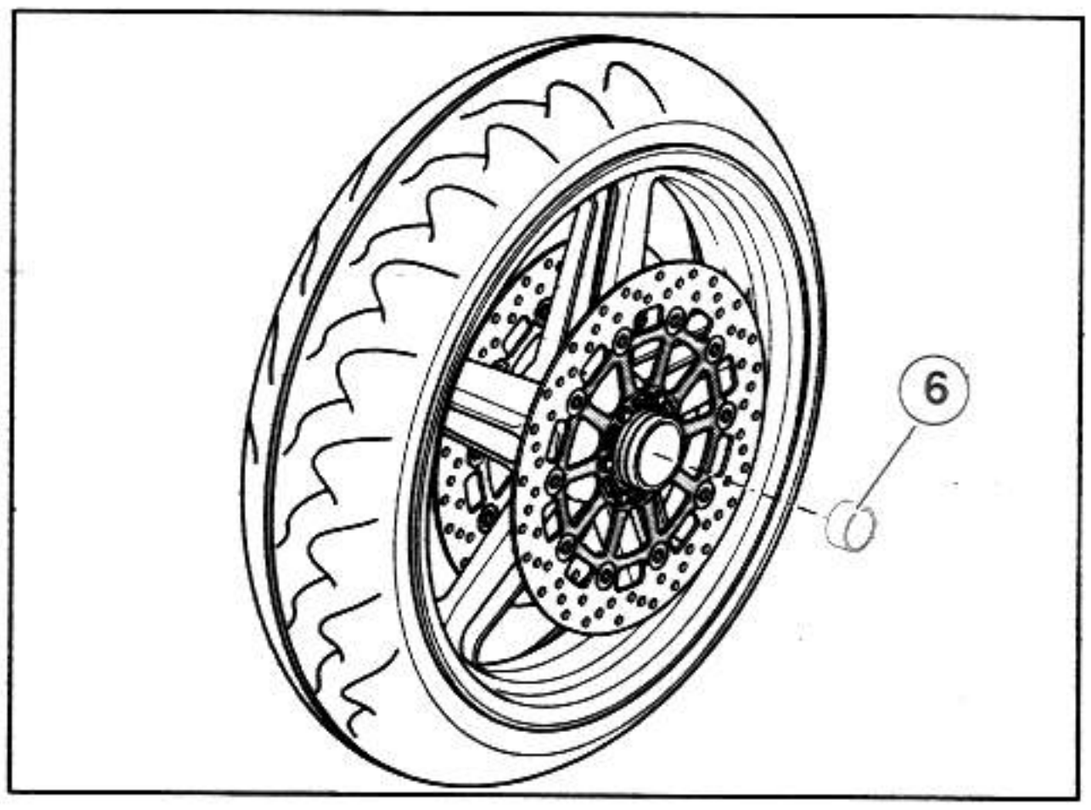

7.2.2 DISMANTLING THE WHEEL

Carefully read 1.3.9 (PRECAUTIONS AND GENERAL INFORMATION).

- Remove the wheel, see 7.2.1 (REMOVING THE COMPLETE WHEEL).
- Clean both sides of the hub with a clean cloth.
- Remove the right spacer (1).

NOTE During reassembly, the right spacer (1) must be placed with the larger side facing the right fork tube.

- ★ Remove the seal (2).
- Use a special extractor to extract the left bearing (4).
- Remove the flex ring (3).
- Use a special extractor to extract the right bearing (5).

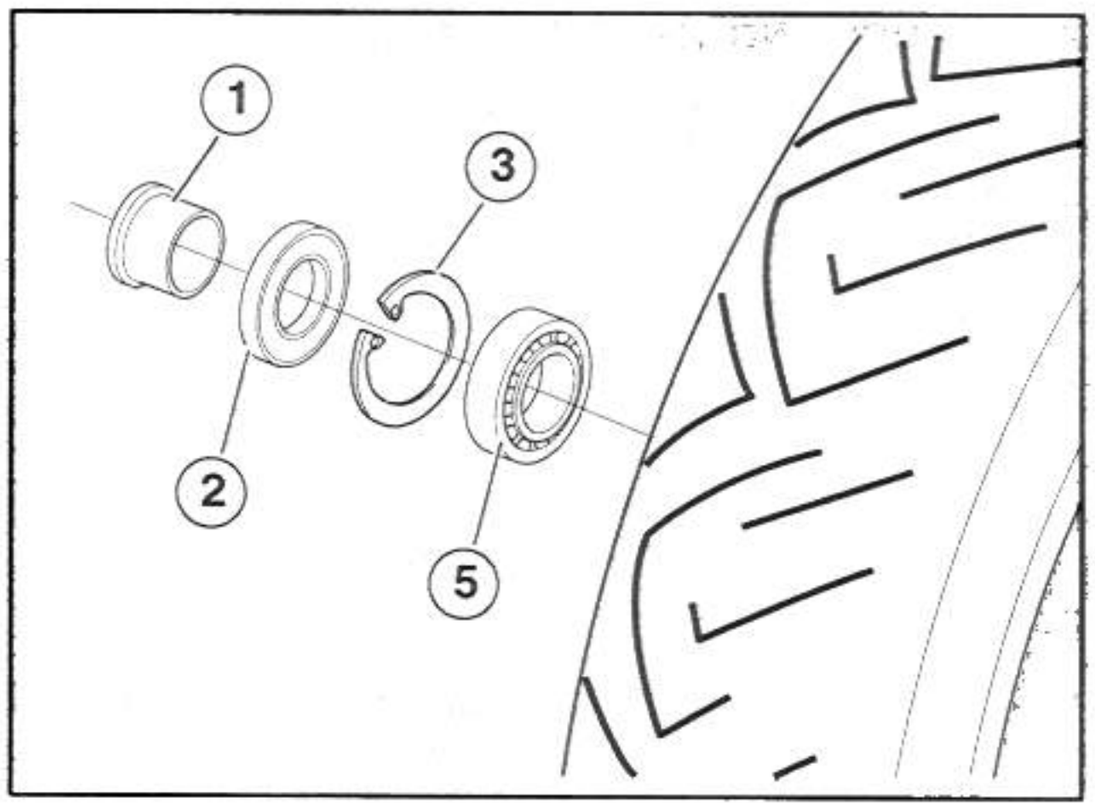

⚠ WARNING

Check the bearings after every disassembly and replace if needed; see 7.2.3 (CHECKING THE COMPONENTS).

- Retrieve the internal spacer (6).
- Thoroughly clean the inside of the hub.

NOTE Wash all components with clean solvent.

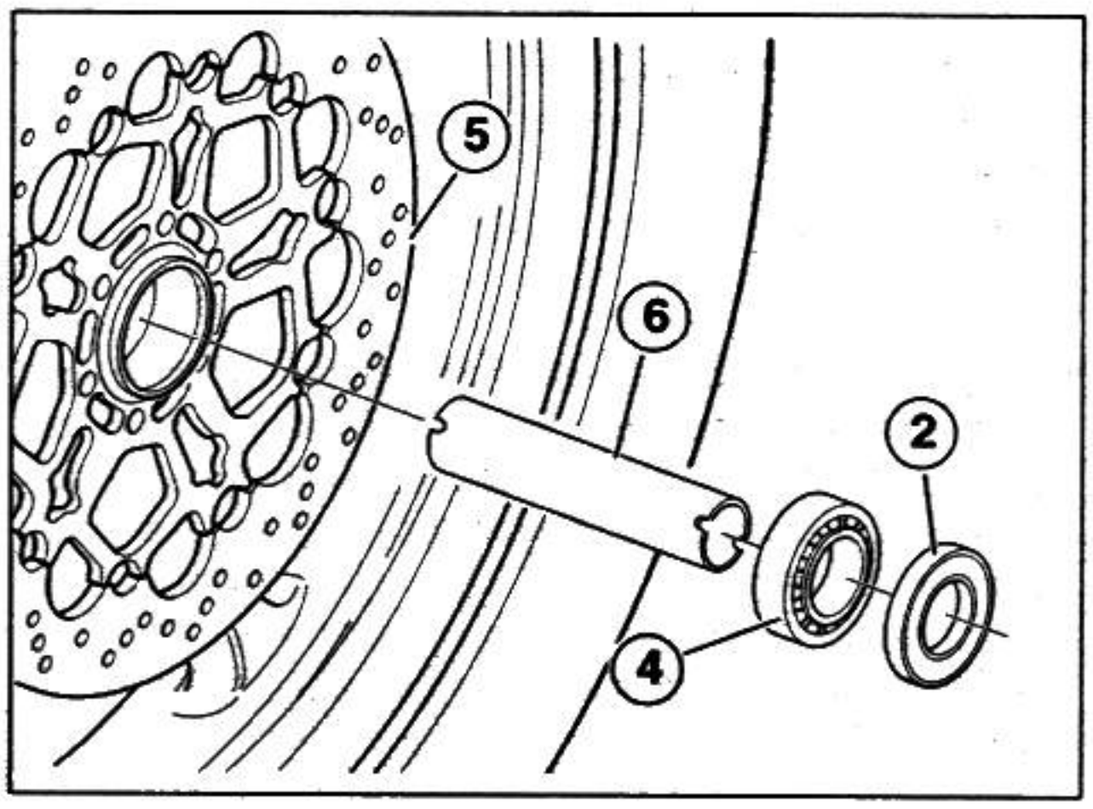

⚠ WARNING

When reassembling, insert the bearings using a drift with the same diameter as the outer ring of the bearings.
Do not strike the balls and/or inner race.
Make sure that the following parts are perfectly touching:

- **the right bearing (5) on the hub;**
- **the spacer (6) on the right bearing (5);**
- **the left bearing (4) on the spacer (6).**

7.2.3 CHECKING THE COMPONENTS

⚠ WARNING

Make sure all components are undamaged, especially those listed below.

BEARINGS

- Manually turn the inner race (1) of each ball bearing. The rollers should turn smoothly and quietly. There should be no axial clearance. Any bearings found to have these faults must be replaced.

GASKETS

- Make sure the gaskets are intact; replaced if damaged or excessively worn.

WHEEL AXLE

- Use a dial indicator to check the eccentricity of the axle (2). If the eccentricity exceeds the limit value, replace the axle (2).
  Maximum eccentricity: 0.009 in (0.25 mm).

WHEEL RIM

- Use a dial indicator to make sure that the radial (A) and axial (B) eccentricity of the wheel rim (3) does not exceed the limit value. Excess eccentricity is usually caused by worn or damaged bearings. If the value does not return to within the limit indicated after changing the bearings, replace the wheel rim (3).
  Maximum radial and axial eccentricity: 0.078 in (2 mm)

TIRE

- Check the status of the tire,see 2.36 (TIRES).

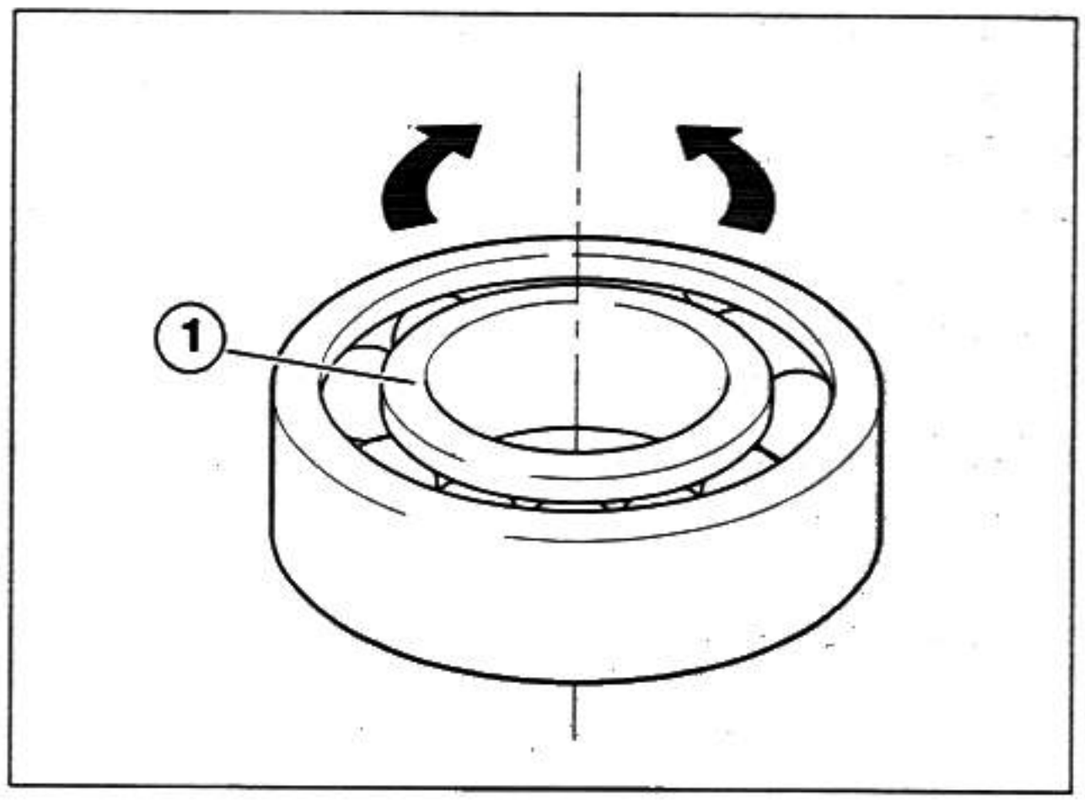

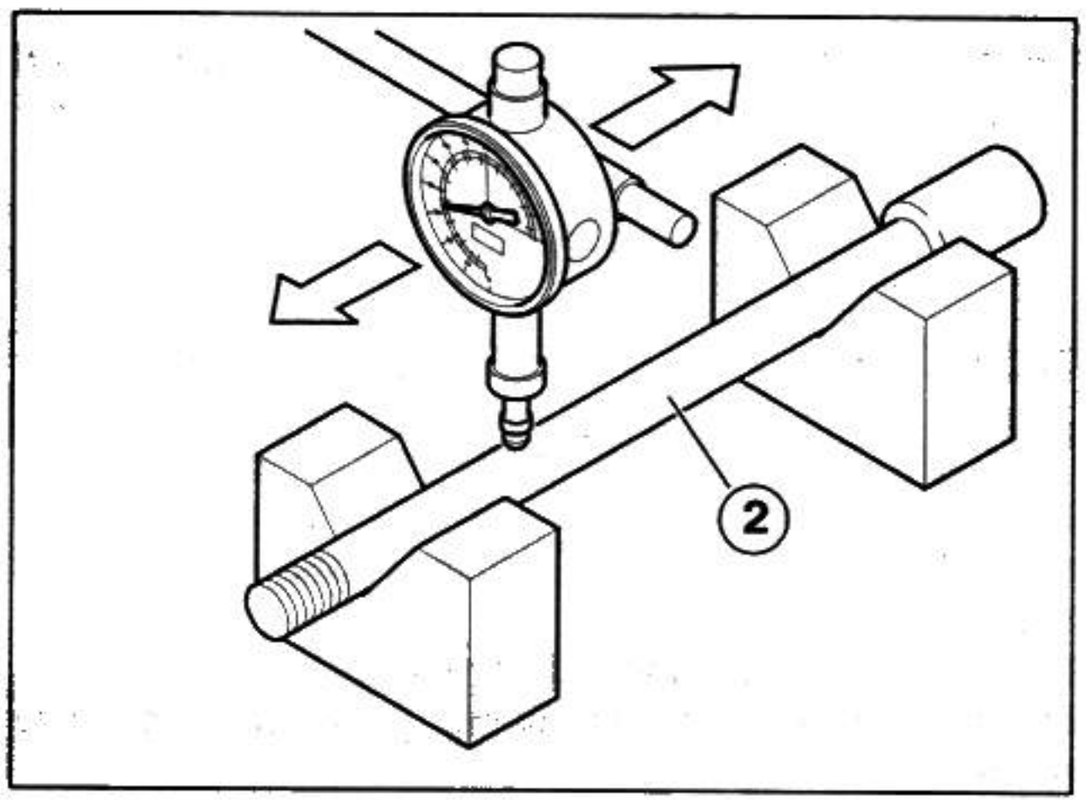

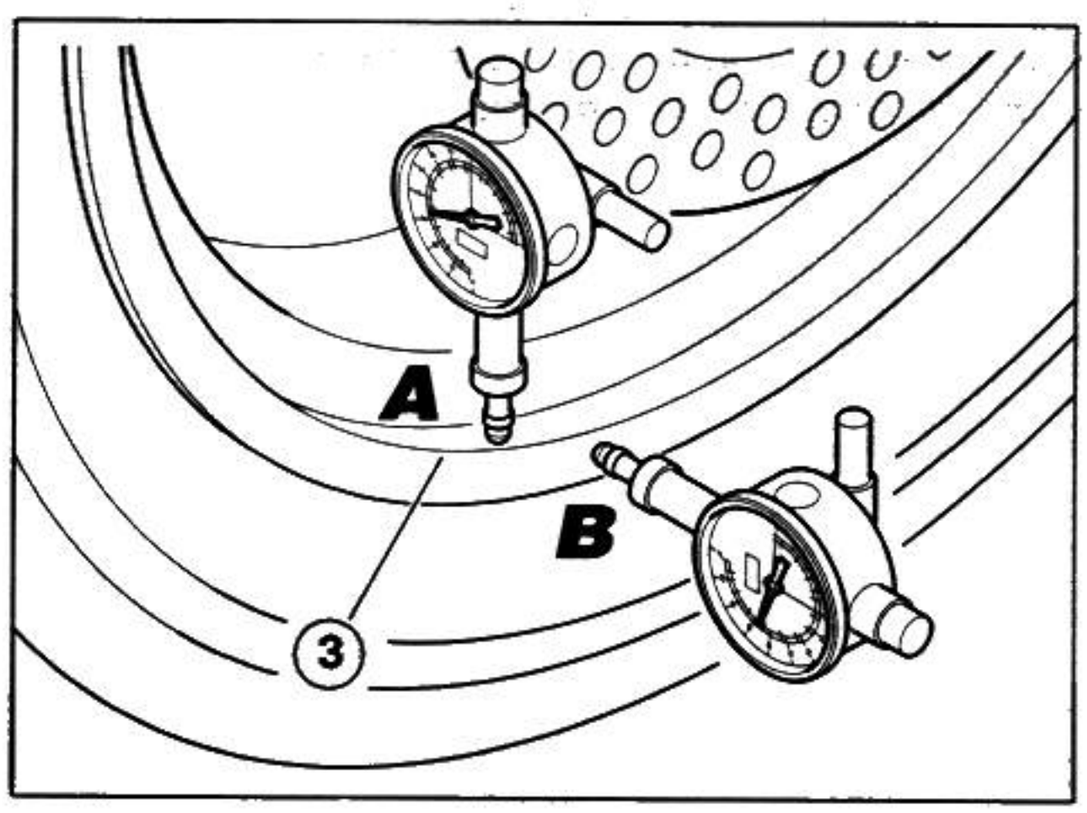

7.2.4 REINSTALLING THE WHEEL

Carefully read 1.3.9 (PRECAUTIONS AND GENERAL INFORMATION).

⚠ WARNING

During reassembly, take care not to damage the brake lines, discs and pads.
The arrow on the wheel hub shows the rotation direction. When reassembling, be careful to mount the wheel properly.

- Spread a light coating of lubricant grease along the entire length of the axle (1), see 1.12 (LUBRICANT CHART).
- Place the left spacer (7) in its seat on the wheel.
- Place the wheel between the fork tubes.

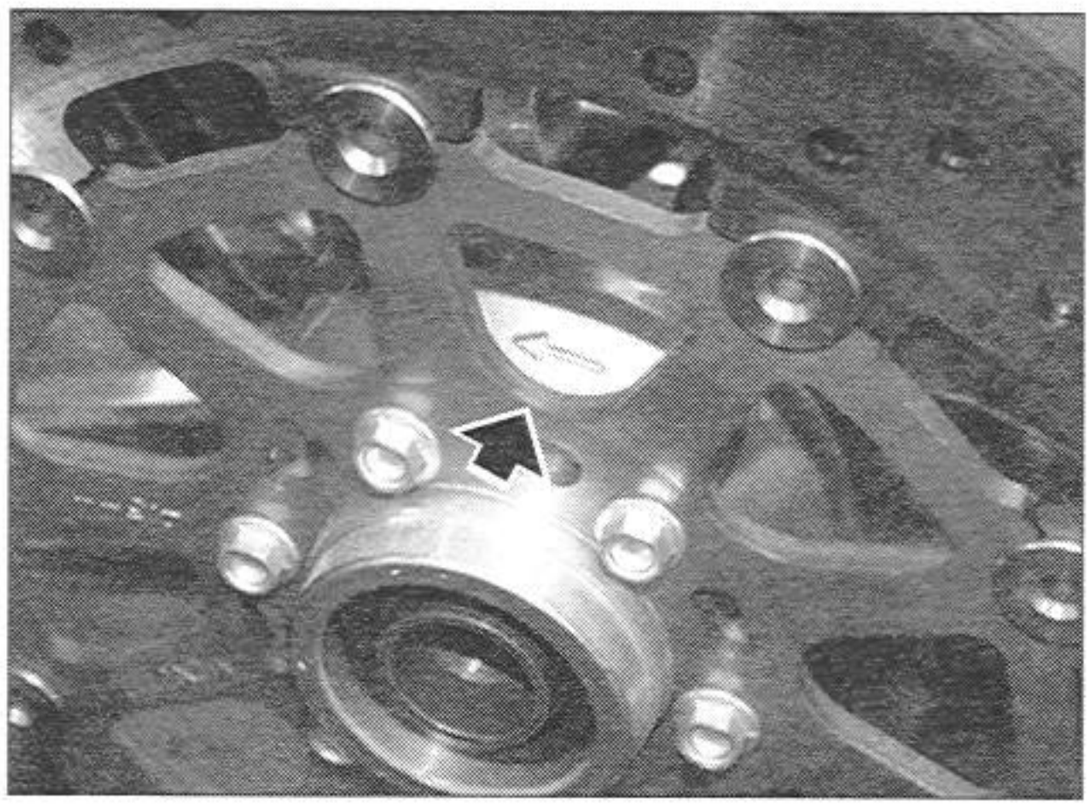

⚠ WARNING

Danger of injury.
Do not insert your fingers to align the holes.

- Move the wheel until the center hole is aligned with the holes on the fork.
- Fully insert the axle (1).
- Place the washer and tighten the nut (3) by hand.
- For block the axle (1) rotation, tighten the two axle clamp screws (4).

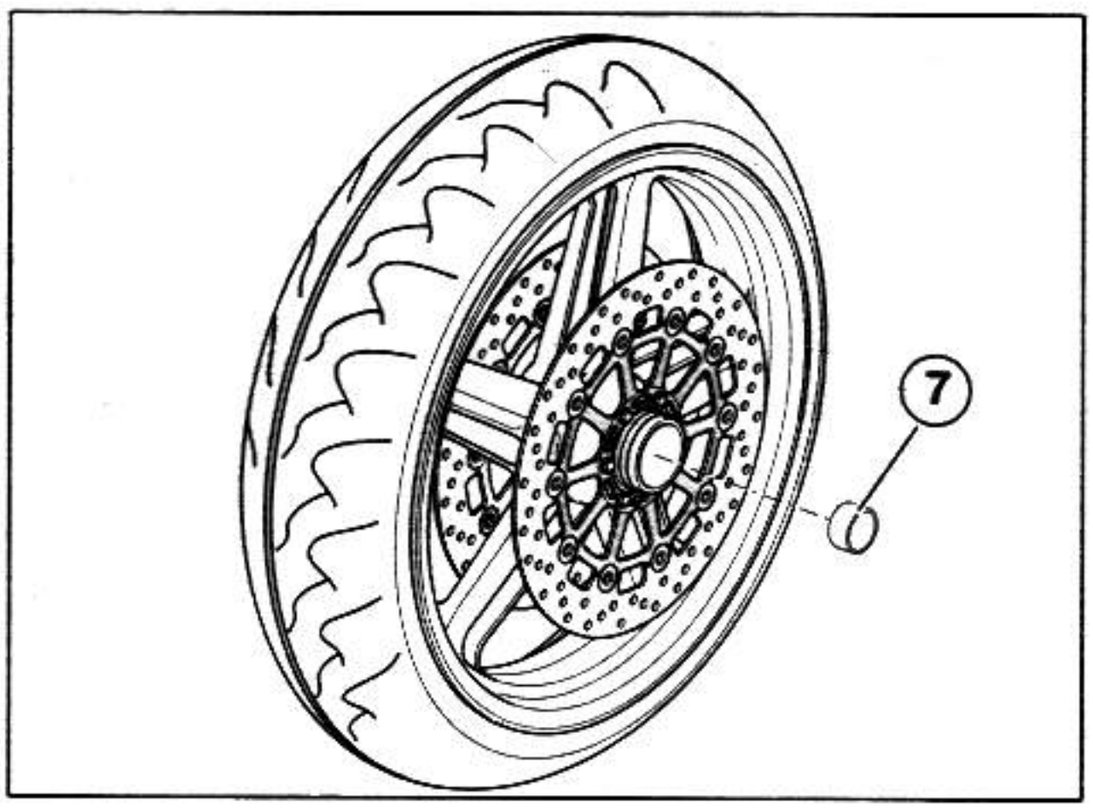

Tightening torque for the axle clamp screws (4): 16.2 ftlb (22 Nm).

- Fully torque the nut (3).

Tightening torque for wheel axle nut (3): 59 ftlb (80 Nm).

- Tighten the two axle clamp screws (5).

Tightening torque for the axle clamp screws (5): 16.2 ftlb (22 Nm).

⚠ WARNING

Be very careful to avoid damaging the brake pads.

- ★Slip the brake caliper (6) onto the disc, and position it so that the fastener holes are aligned with the holes on the support.

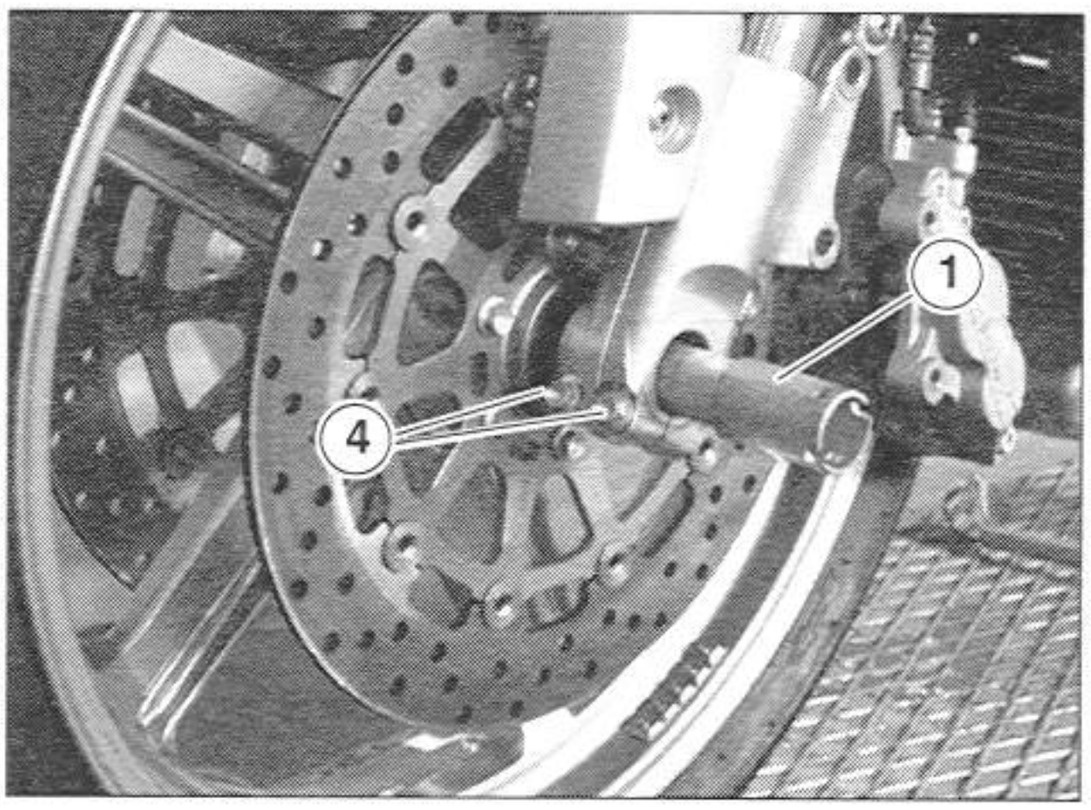

⚠ WARNING

Replace the screws (2) fastening the clamp (6) with two new screws of the same type.

- ★Screw and tighten the two brake caliper fastener screws (2).

Tightening torque for brake caliper screws (2): 36 ftlb (50 Nm).

- Loosen the two axle clamp screws (4).
- Applying the front brake lever, press on the handlebar repeatedly to push the fork down. This will allow the fork tube to settle properly into position.
- Tighten the two axle clamp screws (4).

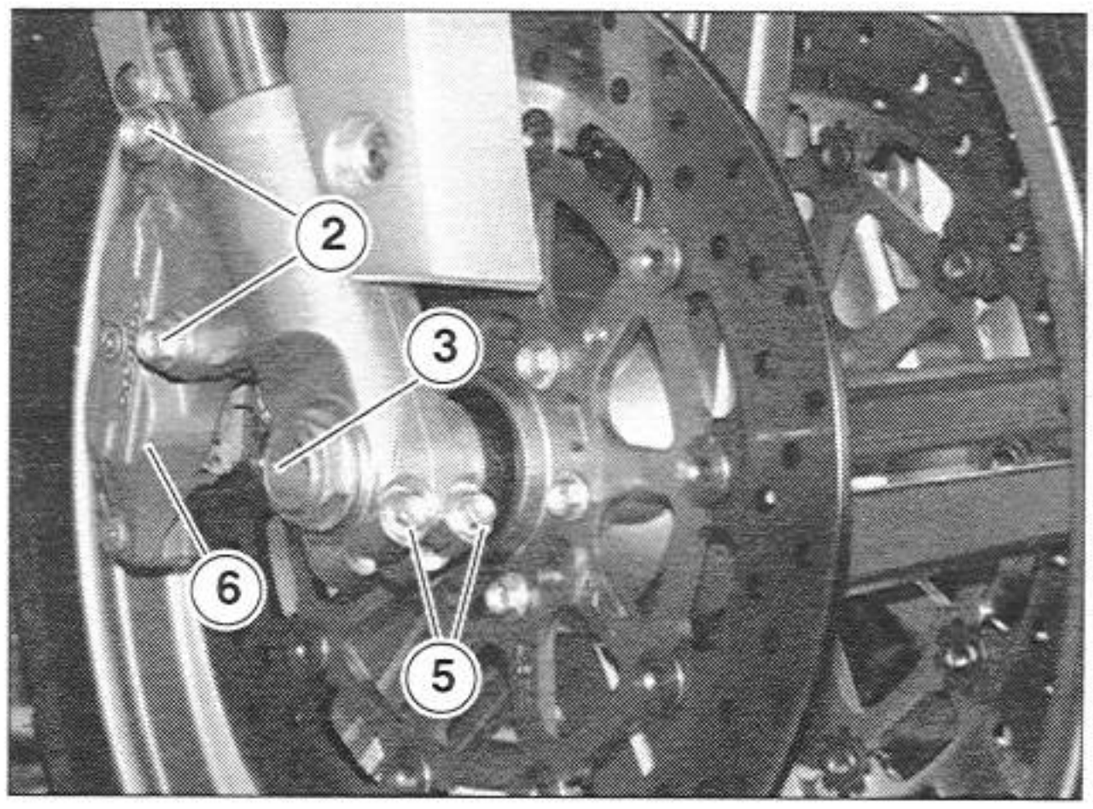

Tightening torque for the axle clamp screws (4): 16.2 ftlb (22 Nm).

⚠ WARNING

After reassembly, operate the front brake lever repeatedly and make sure the brake system is in good working order.

Make sure the wheel is properly centered and balanced.

7.3 REAR WHEEL

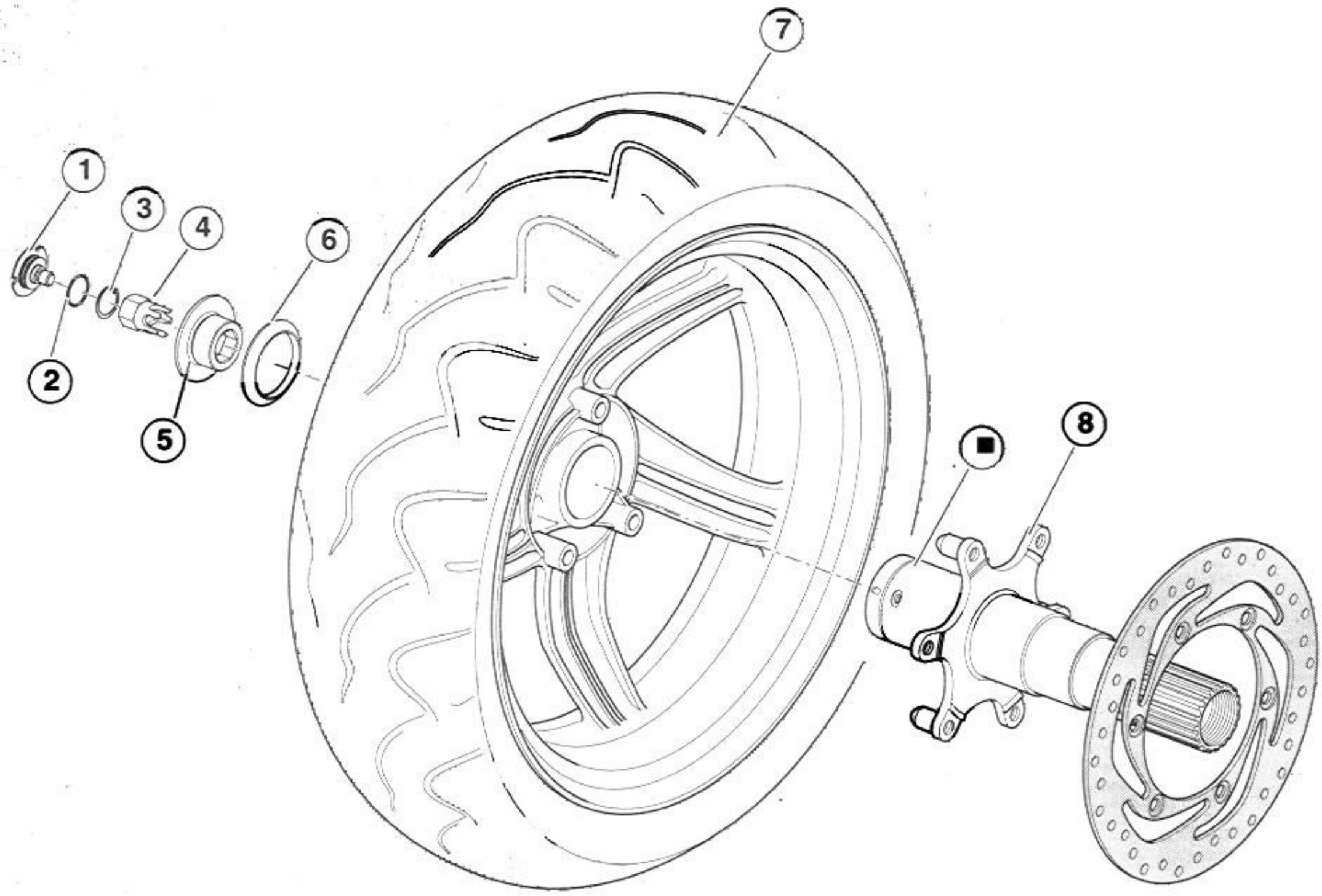

Legend

1) Wheel screw cover
2) O-ring
3) Snap ring
4) Wheel screw stop
5) Wheel screw
6) Wheel cable
7) Complete wheel
8) Wheel axle nut

■ = **GREASE, see 1.12 (LUBRICANT CHART).**

7.3.1 REMOVING THE COMPLETE WHEEL

Carefully read 1.3.9 (PRECAUTIONS AND GENERAL INFORMATION) and see 2.33 (REAR WHEEL).

⚠ DANGER

Wait until the engine and exhaust silencer have completely cooled down.
During disassembly, take care not to damage the brake lines, discs and pads, and the speed sensor cable.

- Place the vehicle on the center stand.
  Use the spanner wrench to unscrew and remove the cap (1).
- Remove the snap ring (2).
- Slide out the screw locking nut (3).
- Engage first gear to keep the wheel from turning.
- Insert the bushing (5) supplied with the tool kit into the screw hole (4).
- Insert the torque wrench into the hexagonal slot of the bushing (5).

Tightening torque for wheel fastening screw: 125.3 ftlb (170 Nm).

⚠ DANGER

The drive shaft has a key (7). Do not allow the key (7) to fall out of its seat while the wheel is being removed.

In this case:

- Set the gearshift lever to neutral.
- Turn the wheel so that the key (7) is at the bottom.
- Completely remove the wheel (8).
- Retrieve the centering bushing (9).

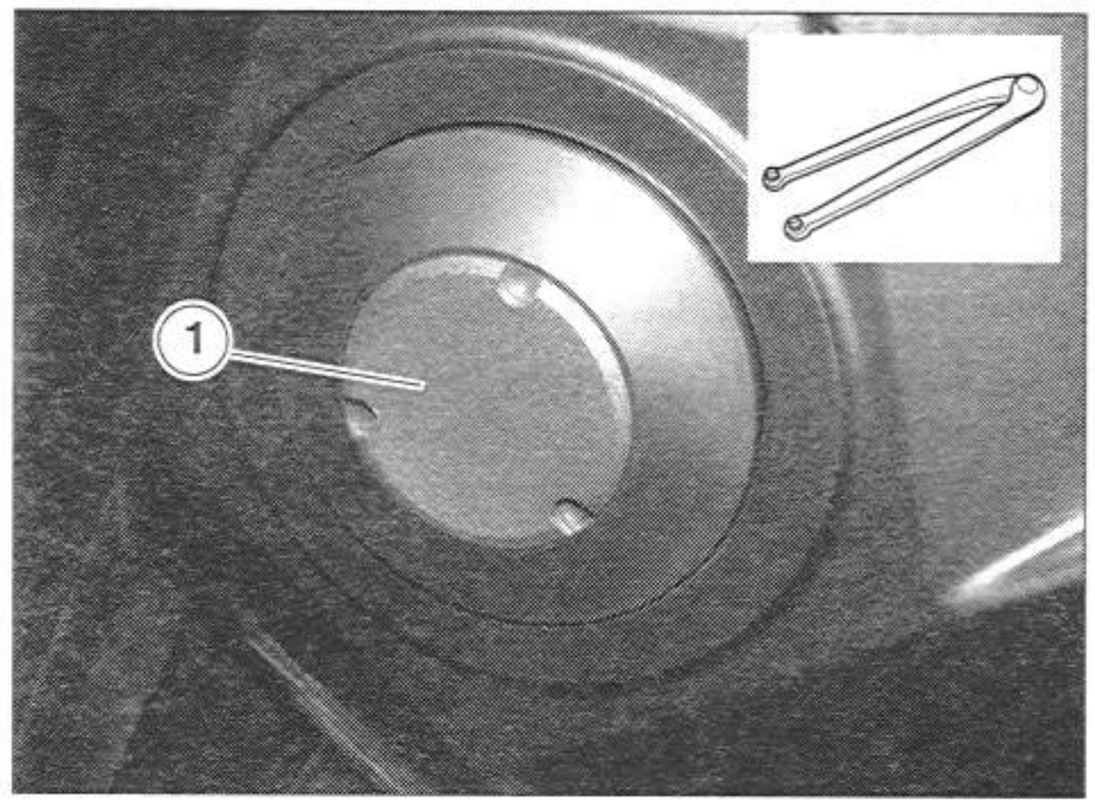

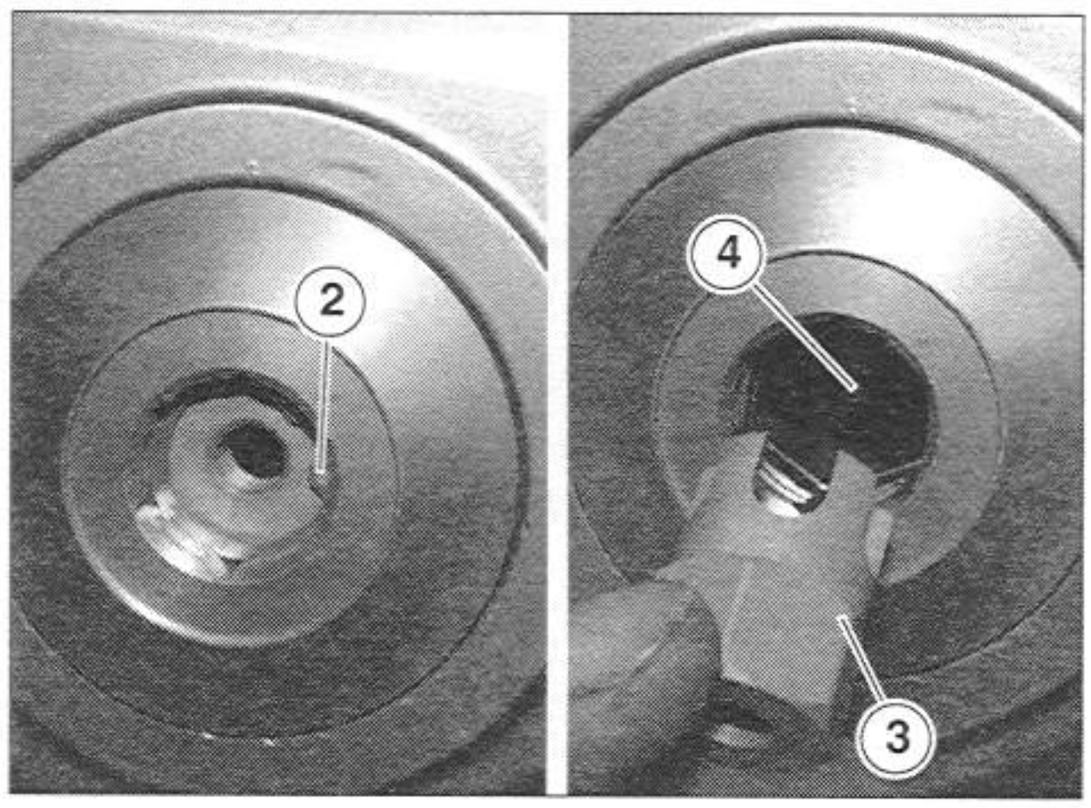

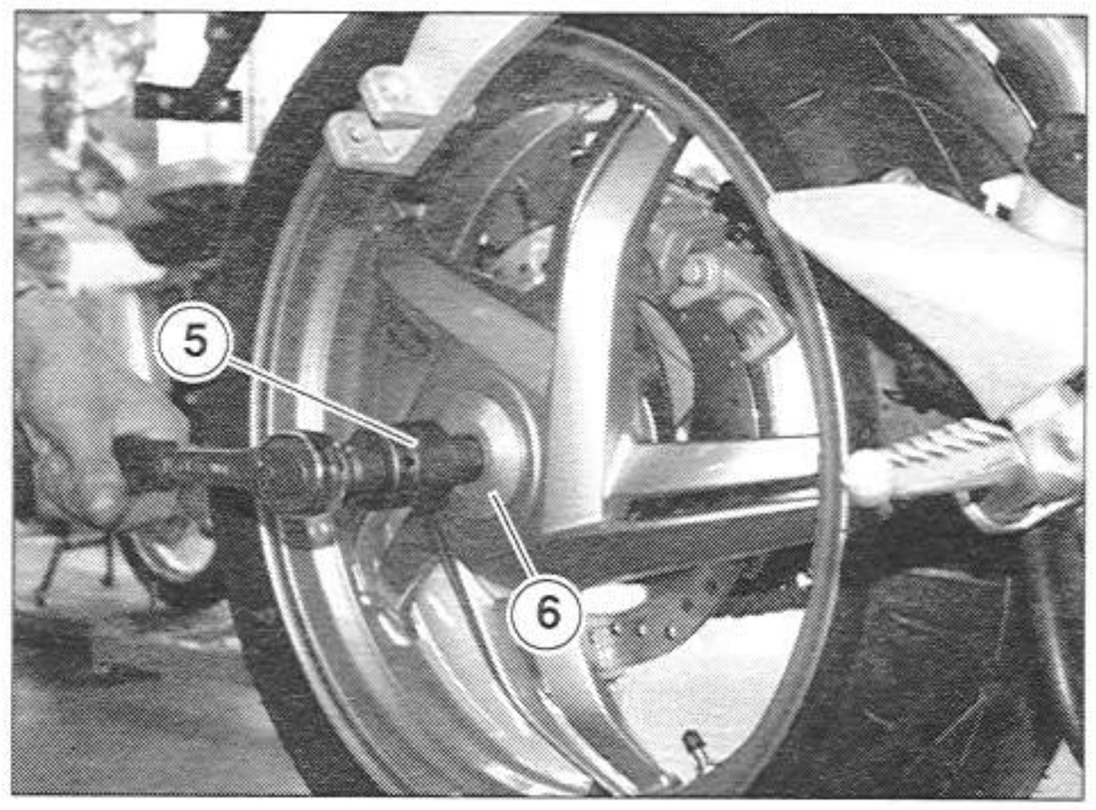

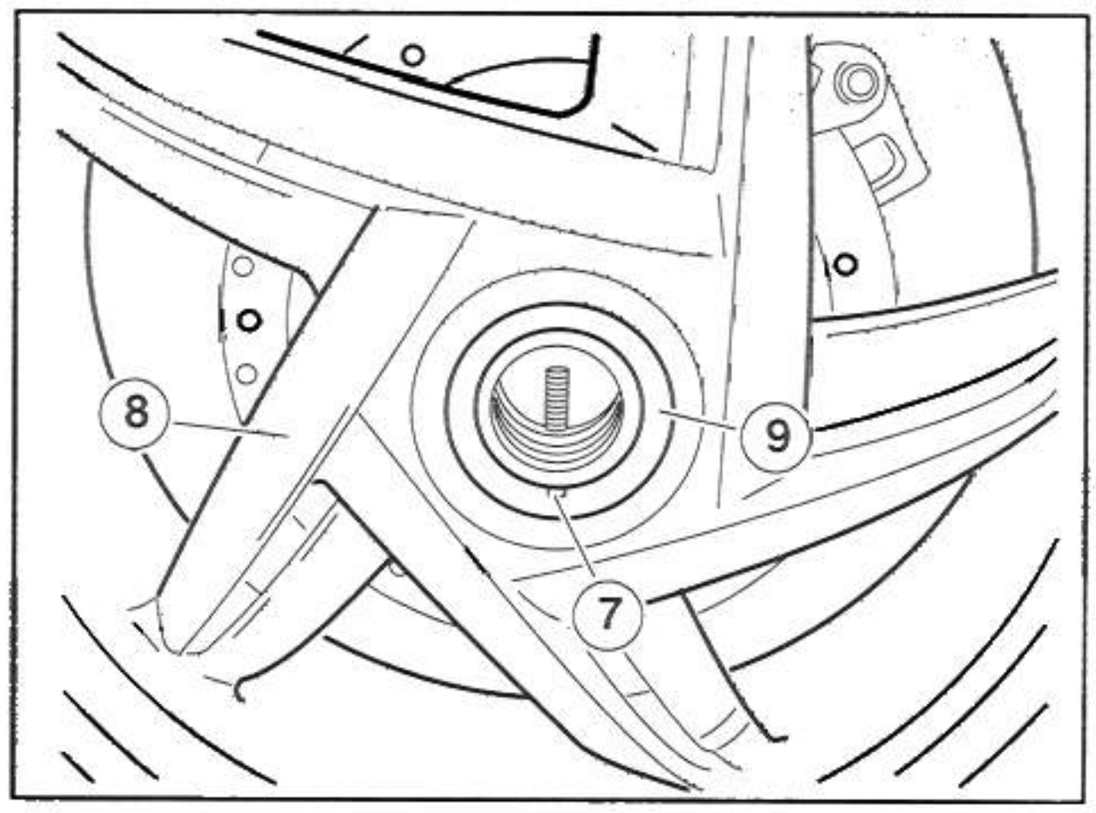

7.3.2 REASSEMBLING THE REAR WHEEL

⚠ DANGER

Before reassembly, make sure the key (1) is present and correctly positioned. Place it correctly if it has fallen from its seat. Do not forget to remount it.

- Turn the drive shaft so that the key (1) is at the top.
- Mount the wheel (2) on the drive shaft, making sure that the three drive pins (3) are correctly inserted in the wheel slots.
- Engage first gear to keep the wheel from turning.
- Make sure the key (1) is present on the drive shaft seat.
- Place the centering bushing (4) correctly, mating the slot (5) with the key (1).
- Spread a light coating of grease lubricant on the thread of the wheel fastening screw (6).
- Screw in the wheel fastening screw (6) by hand.
- Insert the bushing (8) in the screw hole (7).
- Insert the torque wrench into the hexagonal slot of the bushing (8).

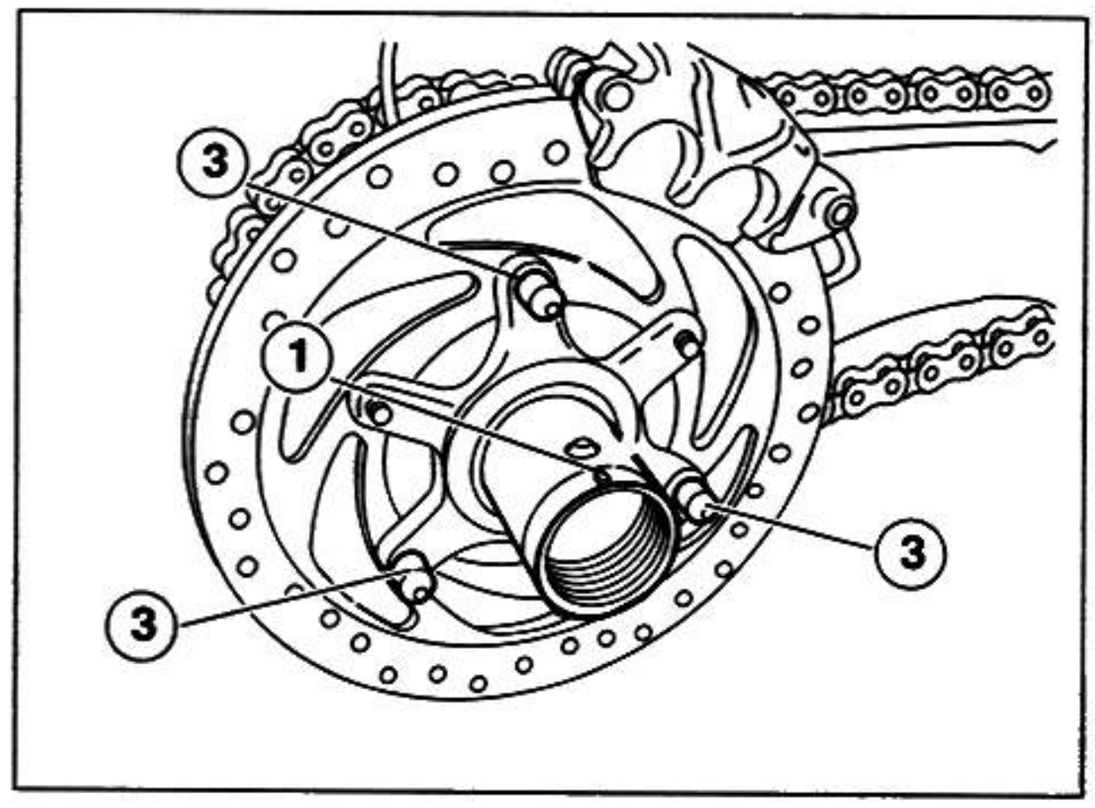

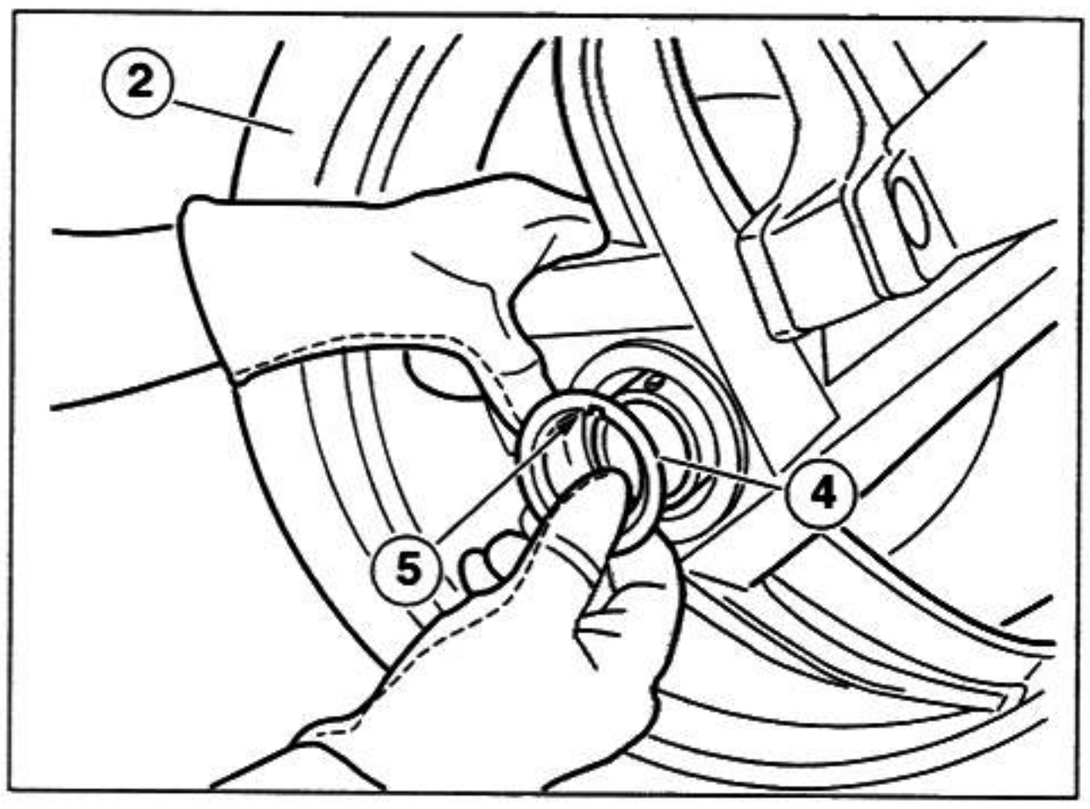

⚠ DANGER

Make sure that the wheel fastening screw (6) is tightened to the prescribed torque.

Tightening torque for wheel fastening screw (6): 125.3 ftlb (170 Nm).

- Tighten the wheel fastening screw (6).

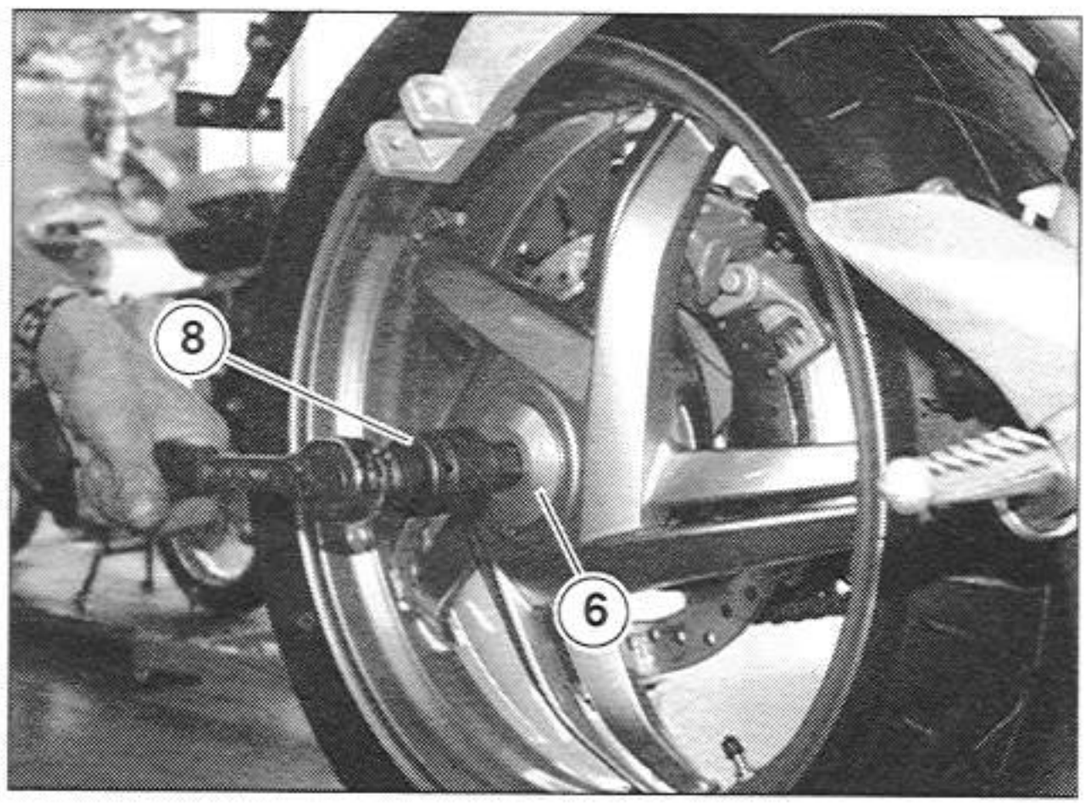

- Insert the screw locking nut (9) into the screw hole (7), seeking the correct position for complete insertion.

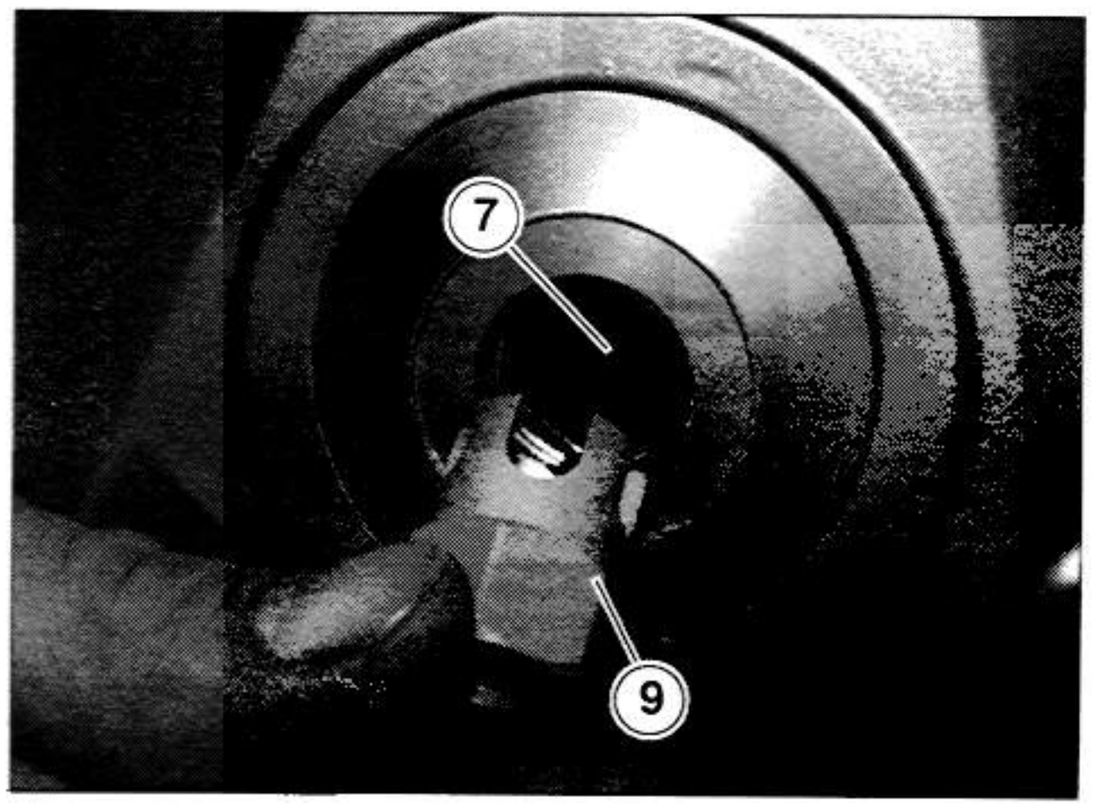

- Place the snap ring (10) correctly.

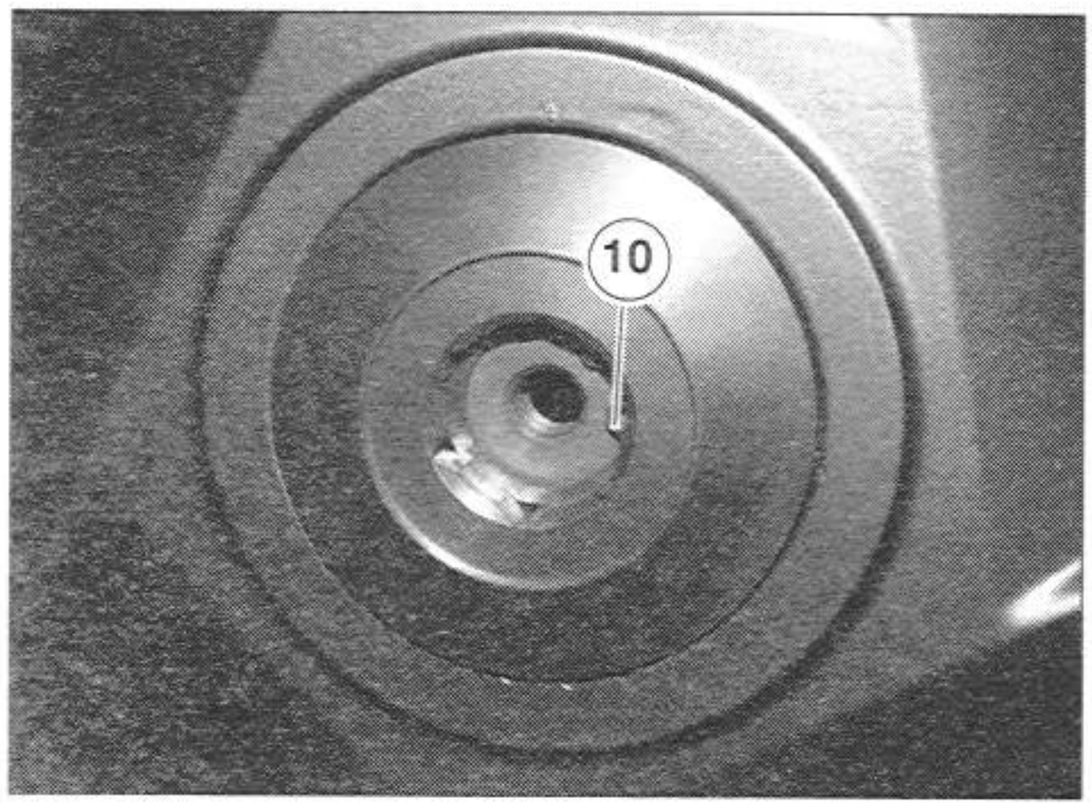

- Return the plug (11) to its place, using the spanner wrench (12).

⚠ WARNING

After reassembly, operate the rear brake lever repeatedly and make sure the brake system is in good working order.
Make sure the wheel is properly centered and balanced.

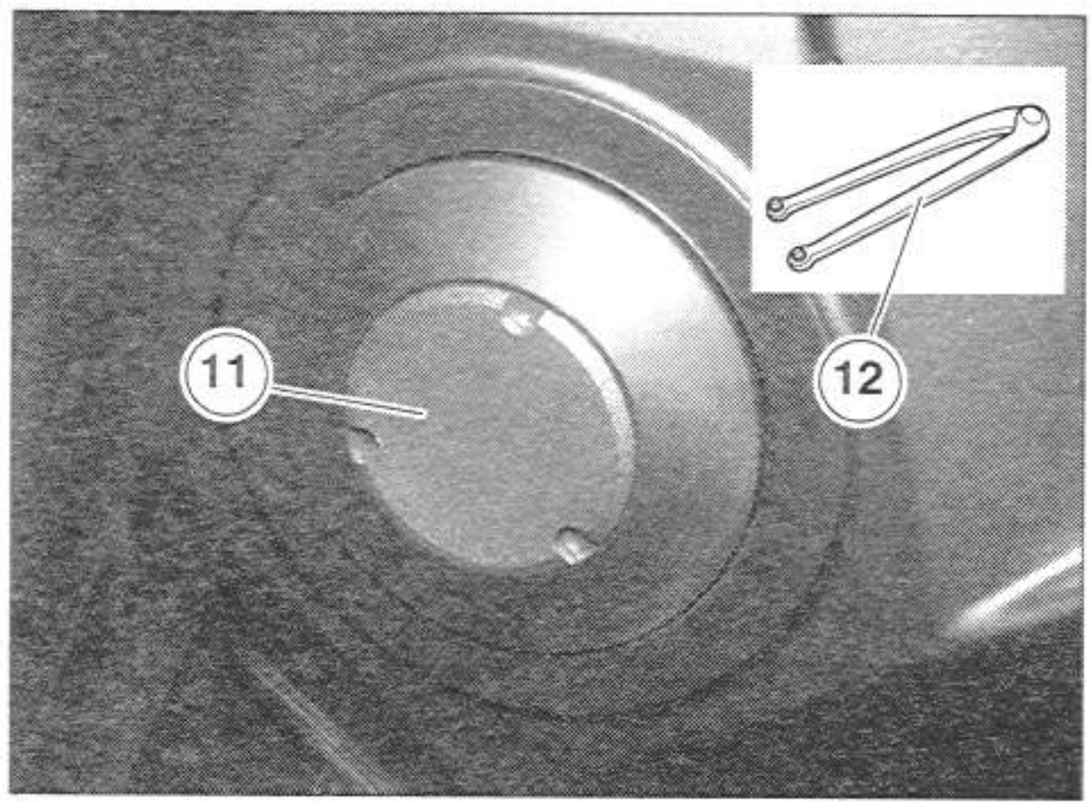

7.4 FINAL DRIVE ASSEMBLY

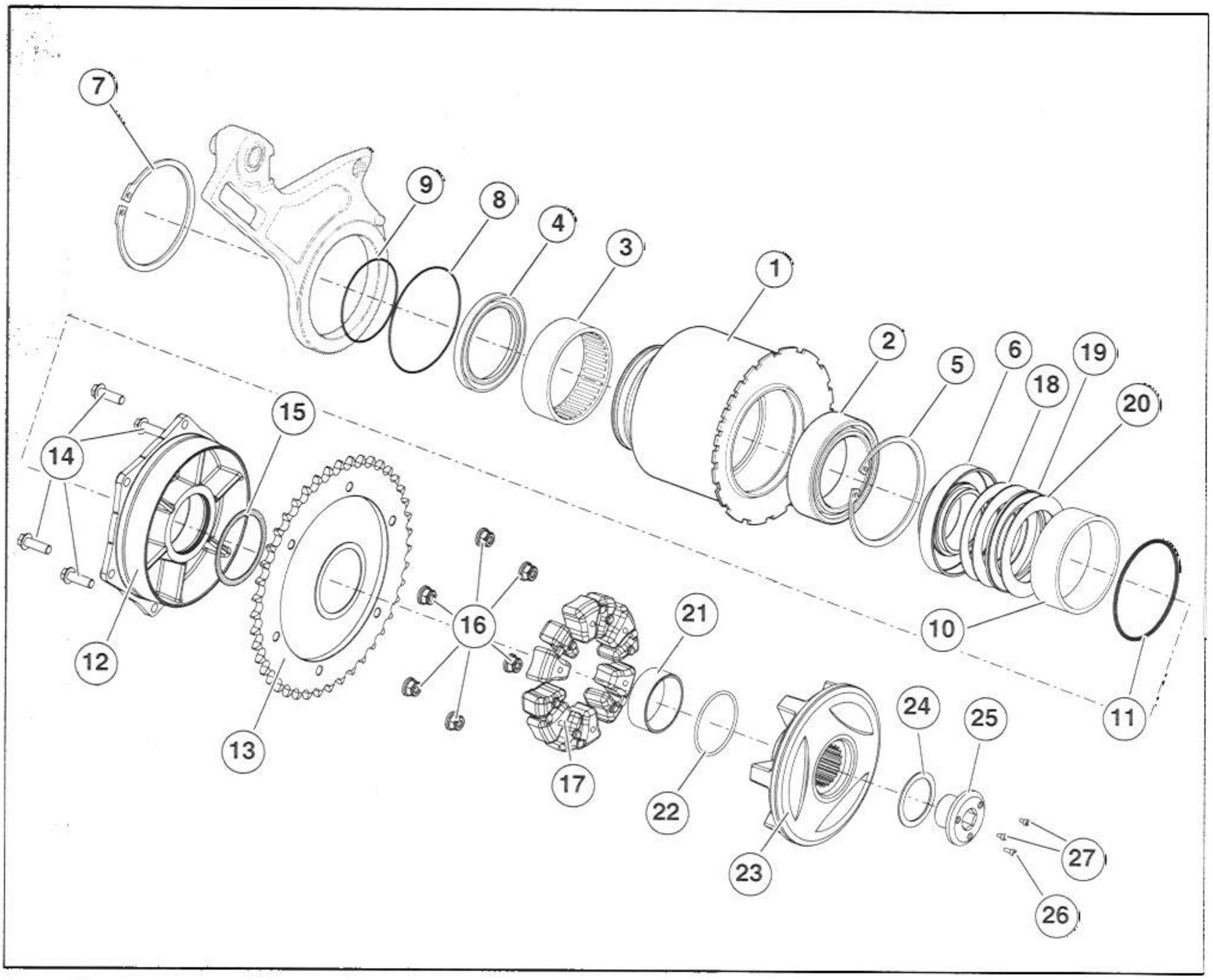

Legend:

1) Eccentric cam
2) Bearing
3) Roller cage
4) Seal
5) Snap ring
6) Thrust-bearing spacer
7) Snap ring
8) O-ring
9) O-ring
10) Roller cage
11) O-ring
12) Sprocket hub
13) Sprocket
14) Screw
15) Spring washer
16) Self-locking flanged nut
17) Flexible coupling grommet
18) Belleville washer
19) Roller cage
20) Center bearing
21) Ring
22) O-ring
23) Flexible coupling holder
24) Belleville washer
25) Screw
26) Screw
27) Screw

7.4.1 REMOVING THE FINAL DRIVE ASSEMBLY

Carefully read 1.3.9 (PRECAUTIONS AND GENERAL INFORMATION).

- Remove the wheel, see 7.3.1 (REMOVING THE COMPLETE WHEEL).
- Remove the lower chain shoe, see 7.1.57 (REMOVING THE DRIVE CHAIN SHOE).
- Loosen the drive chain tension, see 2.35.3 (ADJUSTING THE DRIVE CHAIN).

NOTE To remove the sprocket (8), see 7.4.4 (REMOVING THE SPROCKET).

- Unscrew and remove the three safety screws (1-2).

Tightening torque for safety screws (1-2): 110.6 ftlb (150 Nm).

⚠ WARNING

When reassembling make sure that the safety screw (1) (the longer one) is all the way down in one of the three holes in the wheel fastening screw (3).

- Insert the bushing (5) supplied with the tool kit into the screw hole (4).
- Insert the torque wrench into the hexagonal slot of the bushing (5).

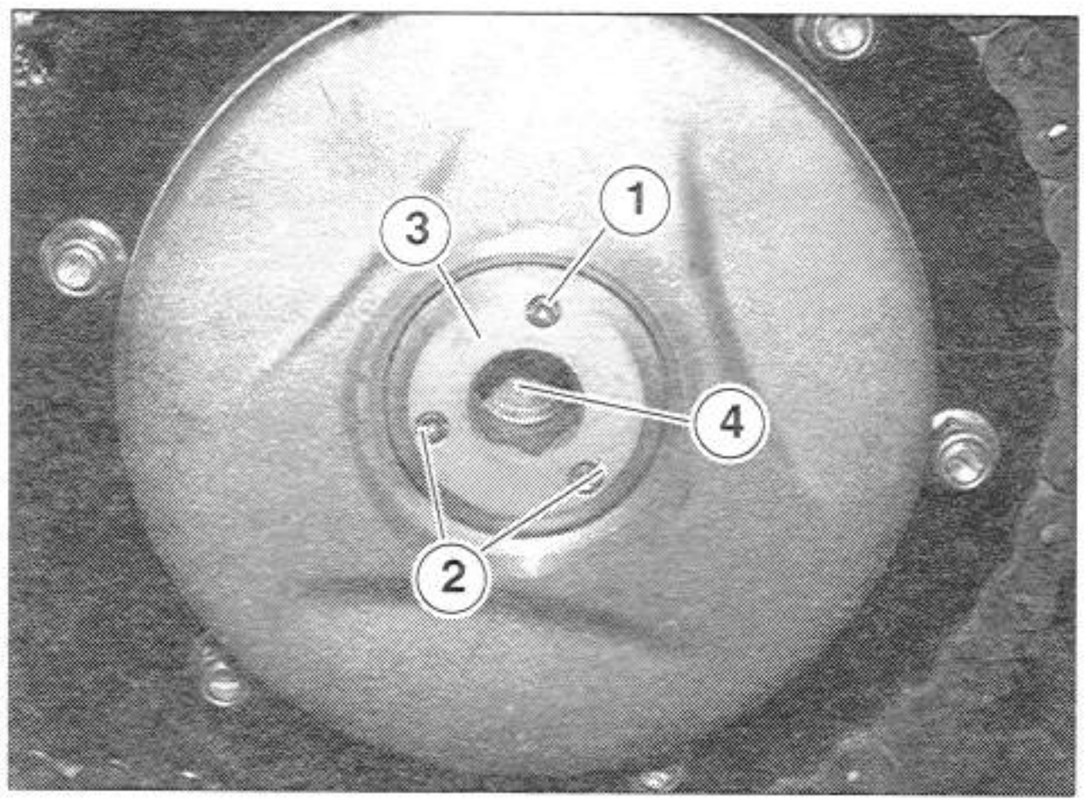

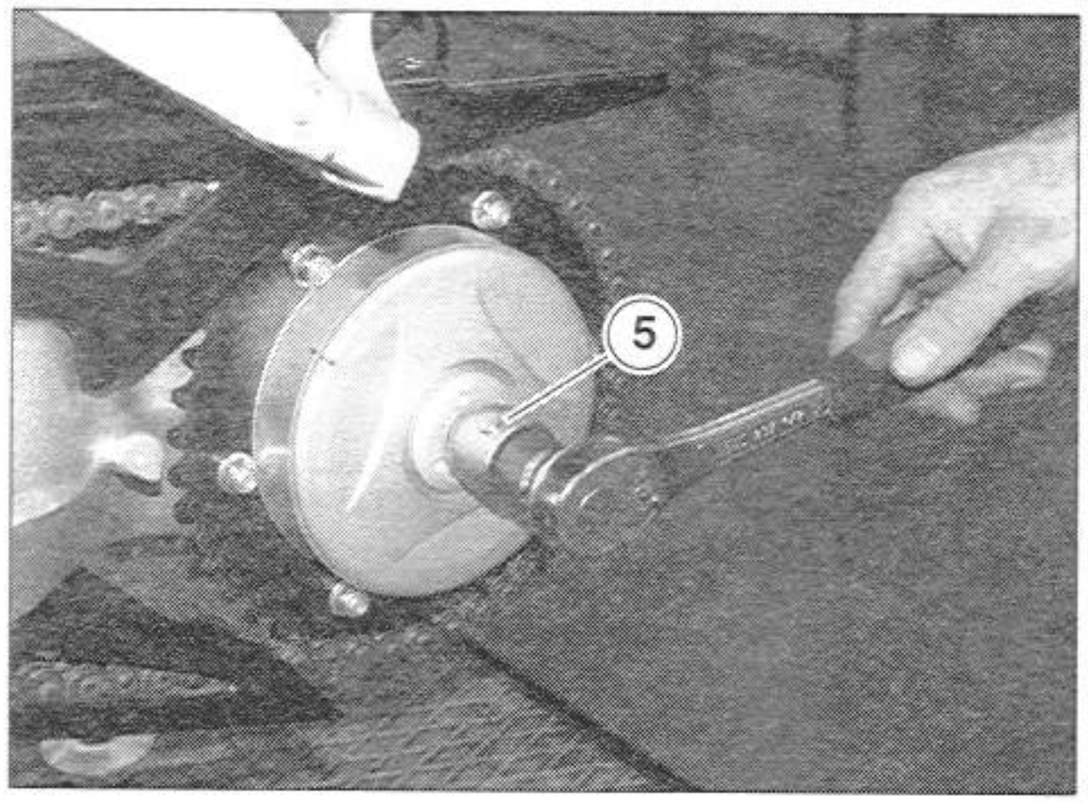

- Unscrew and remove the axle fastening screw (3); retrieve the Belleville washer (6) if it has fallen out.

Tightening torque for axle screw (3): 110.6 ftlb (150 Nm).

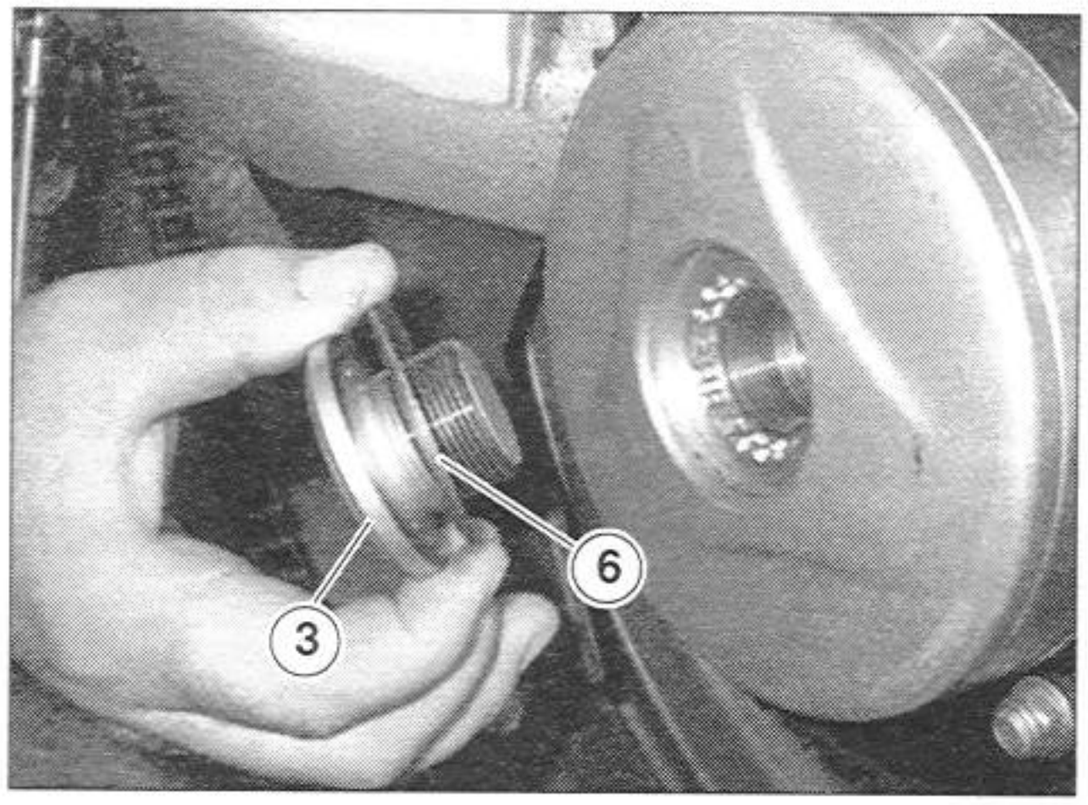

- Remove the hub (7) complete with sprocket (8) from the axle (12).

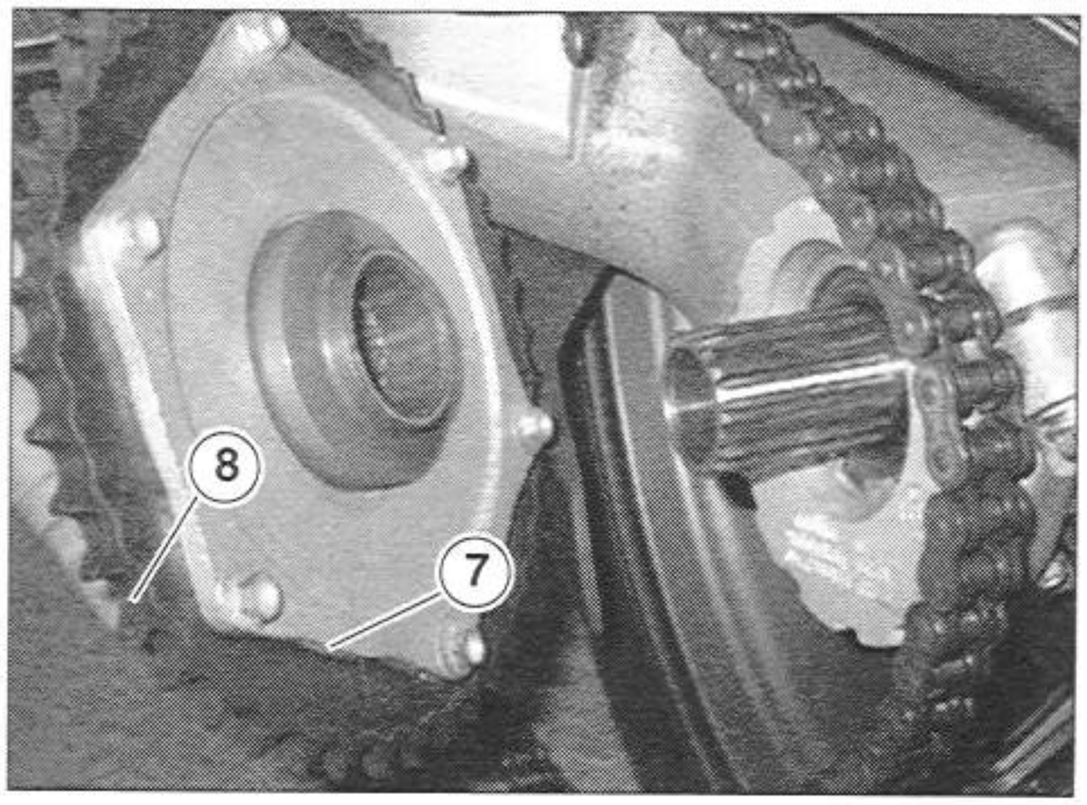

- Retrieve the O-ring (9).

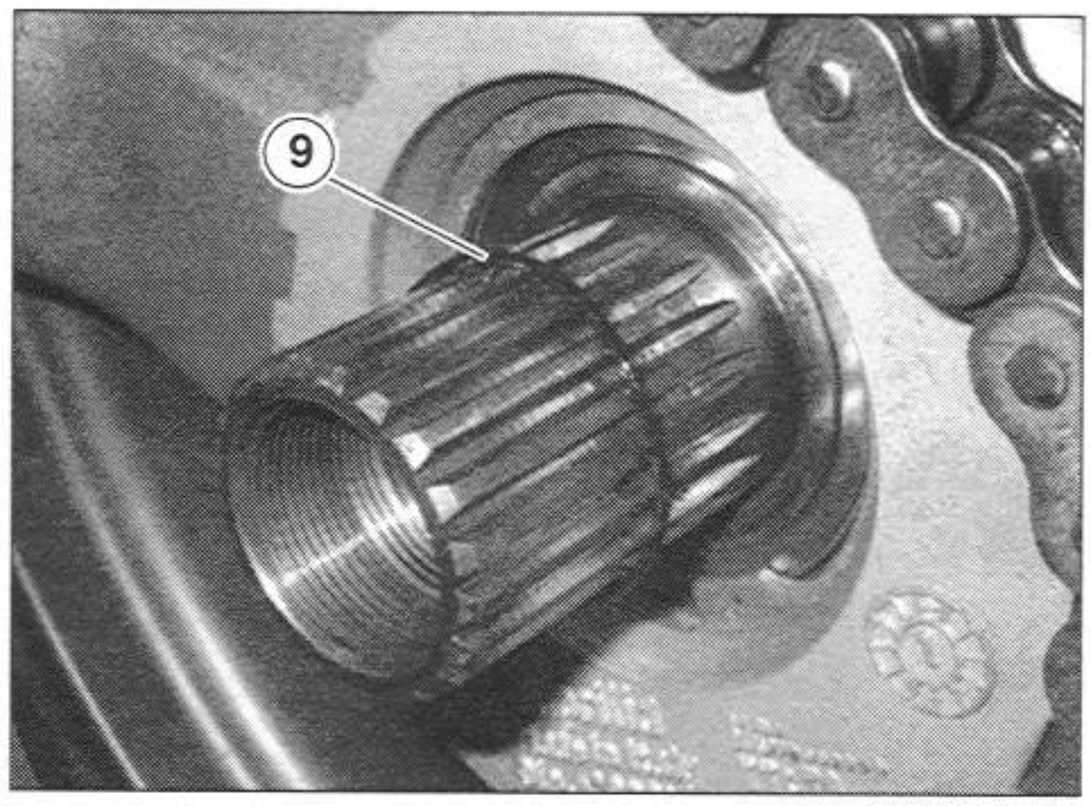

- Unscrew and remove the six screws (10).

NOTE To unscrew the screws (10), we recommend using an impact wrench, which delivers the sharp blow needed to release the screws from the LOCTITE® 243.

- Unscrew and remove the six brake disc screws (10).

⚠ WARNING

When reassembling, apply LOCTITE® 243 to the thread of the brake disc screws.

NOTE When reassembling, insert all screws by hand and cross-tighten.

Tightening torque for brake disc screws (10): 22.1 ftlb (30 Nm).

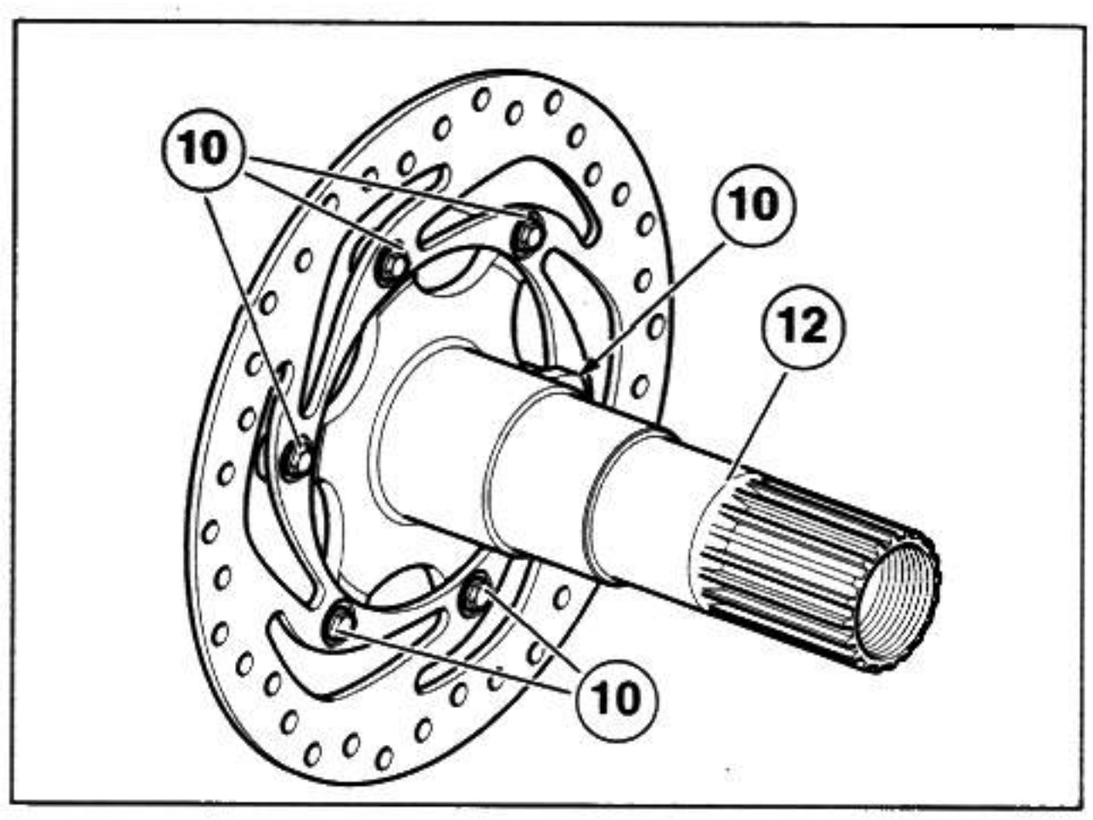

- Lower the brake disc (11).
- Slide the axle (12), complete with brake disc (10), out from the right side.
- Remove the snap ring (13).
- Remove the snap ring (14).

⚠ WARNING

When reassembling the snap rings (13-14), make sure that you hear the typical "click" indicating that the ring is correctly fastened.

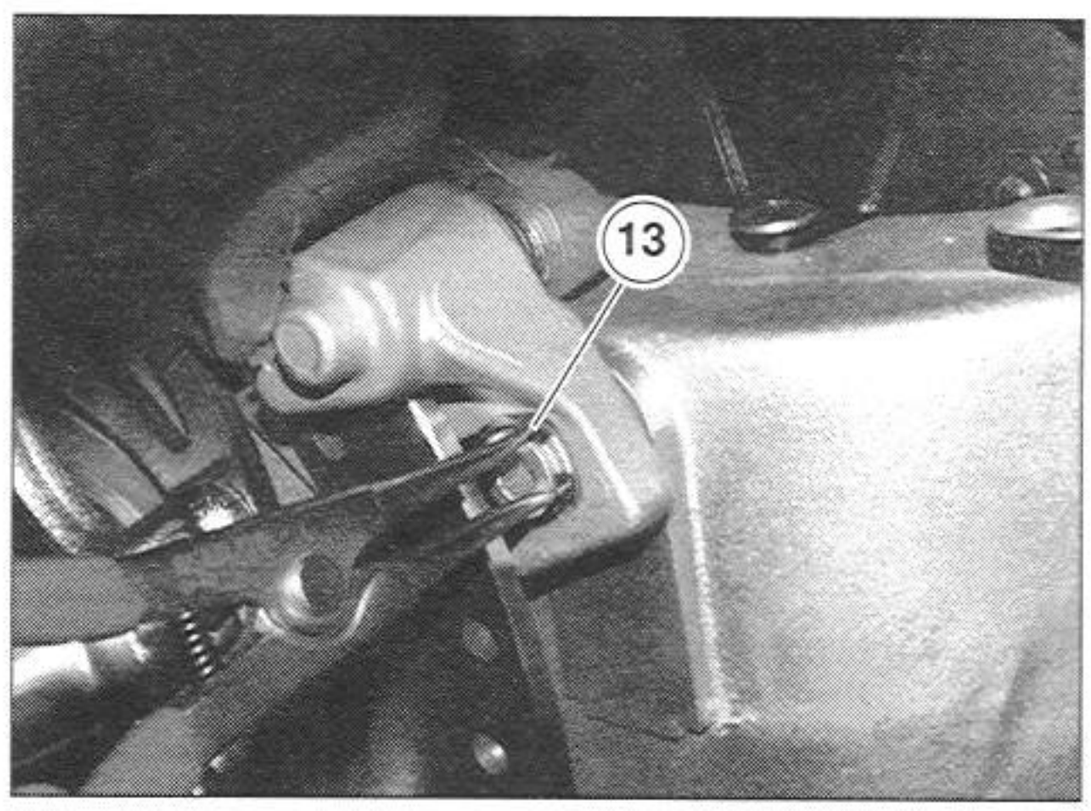

- Remove the brake caliper support (15) complete with brake caliper, keeping them attached to the brake line.

If necessary:

- Remove the eccentric cam, see 7.4.3 (REMOVING THE ECCENTRIC CAM).

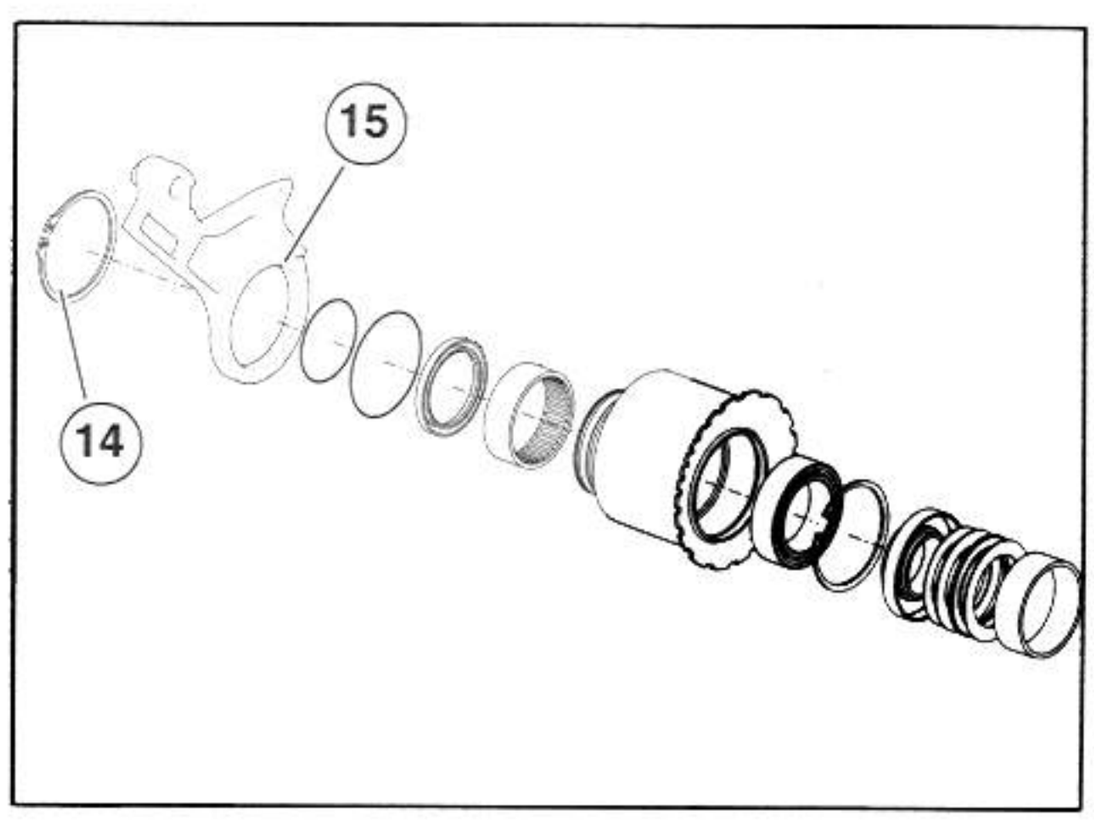

7.4.2 CHECKING THE COMPONENTS

⚠ WARNING

Make sure all components are undamaged, especially those listed below.

BEARINGS, GASKETS, WHEEL AXLE AND RIM, see 7.2.3 (CHECKING THE COMPONENTS).

FLEXIBLE COUPLINGS

- Make sure that the flexible coupling grommets (1) are not damaged and/or excessively worn. Replace the grommets (1) if necessary.

sprocket

- Check the teeth of the sprocket (2) and countershaft sprocket. If excessively worn, replace sprocket, countershaft sprocket and drive chain, see 7.4.1 (REMOVING THE FINAL DRIVE ASSEMBLY) and 7.1.57 (REMOVING THE DRIVE CHAIN SHOE).

⚠ WARNING

Replace all three to avoid premature wear on new components.

TIRE

- Check the condition of the tire, see 2.36 (TIRES).

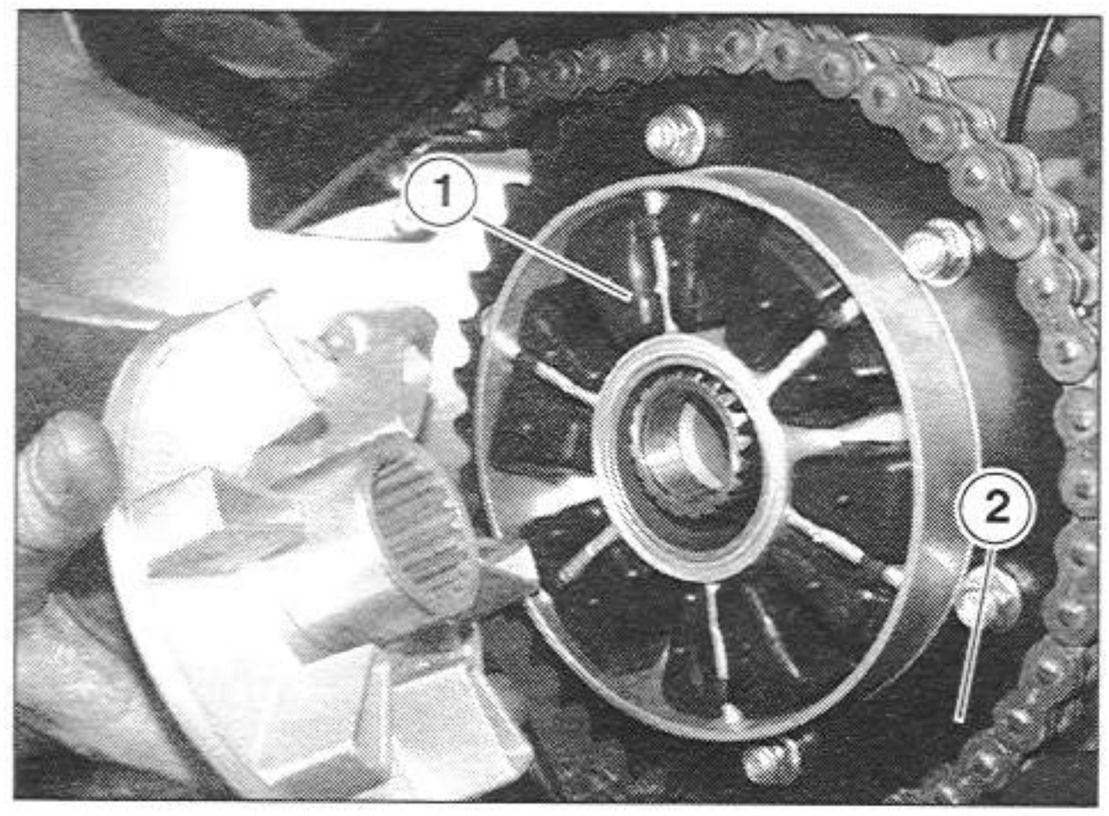

7.4.3 REMOVING THE ECCENTRIC CAM

Carefully read 1.3.9 (PRECAUTIONS AND GENERAL INFORMATION).

- Remove the swinging arm pivot, see 7.4.1 (REMOVING THE FINAL DRIVE ASSEMBLY).
- Loosen the two screws (1).

Tightening torque for nuts (1): 25.8 ftlb (35 Nm).

- Remove the snap ring (2).
- Slide the eccentric cam out from the left side.

NOTE Remove the individual components if necessary.

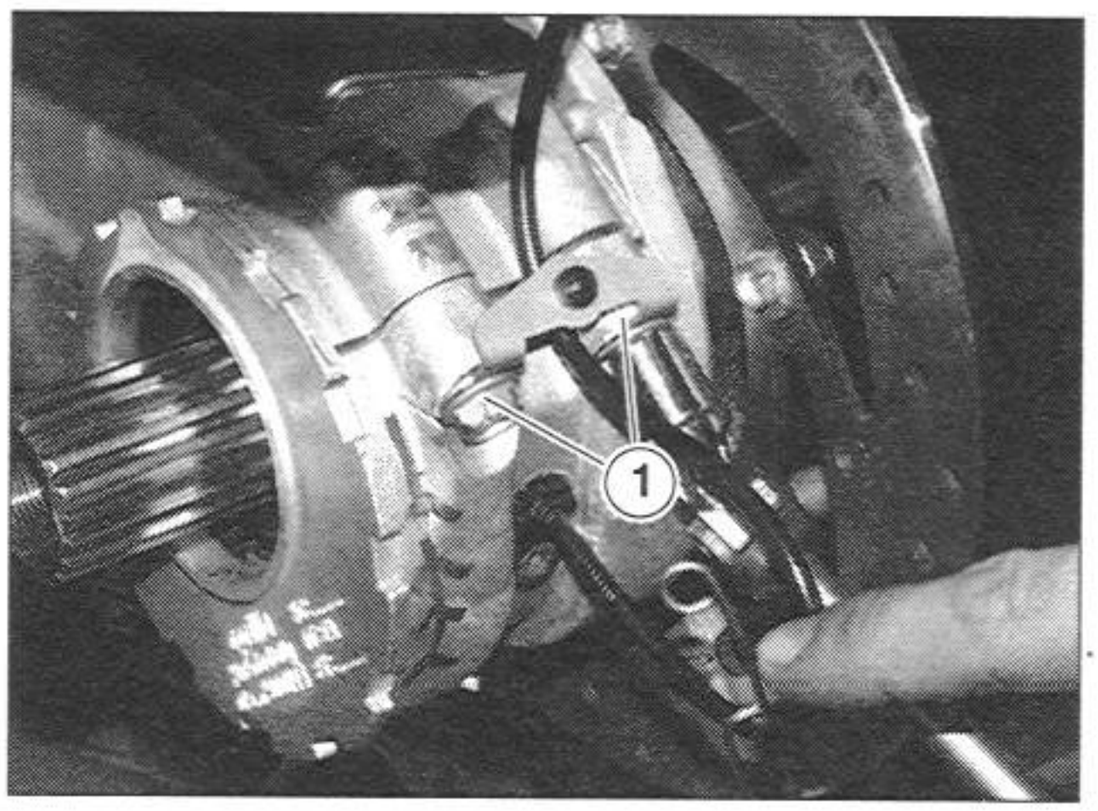

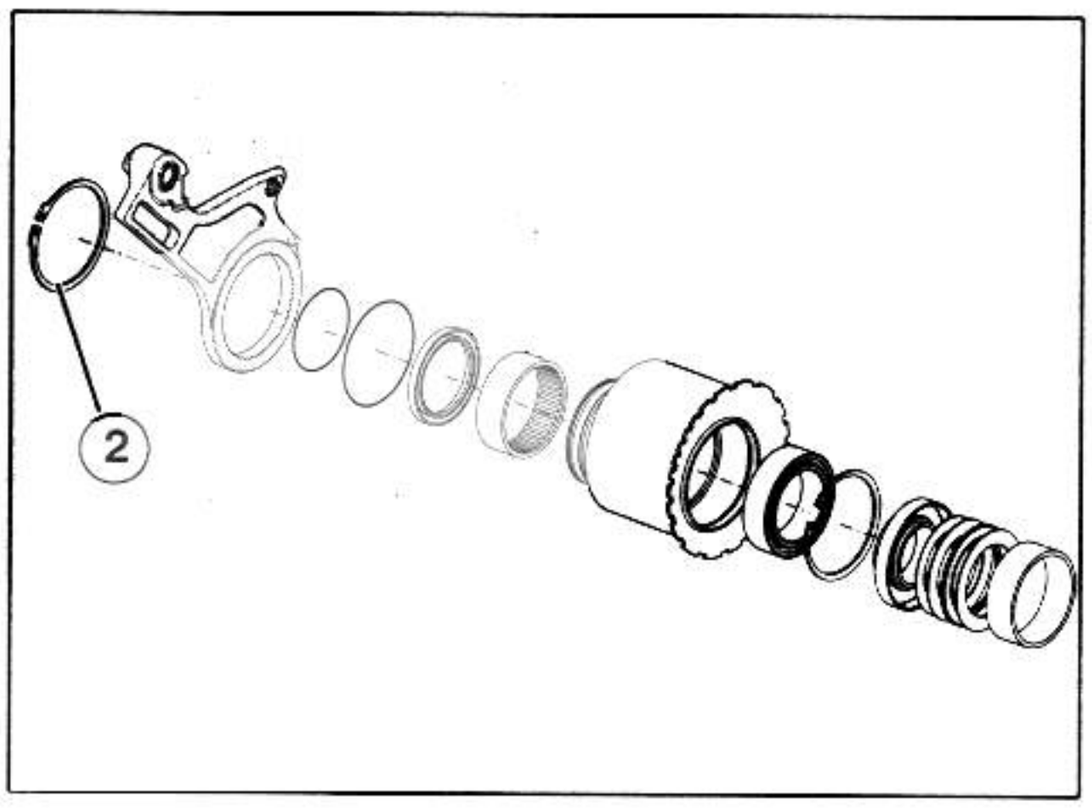

7.4.4 REMOVING THE SPROCKET

- Place the vehicle on the center stand.
- Loosen the drive chain tension, see 2.35.3 (ADJUSTING THE DRIVE CHAIN).
- Unscrew and remove the six nuts (1).

NOTE When reassembling, insert all nuts (1) by hand and cross-tighten to torque.

Tightening torque for nuts (1): 18.4 ftlb (25 Nm).

- Slide the sprocket out from the left side of the vehicle.

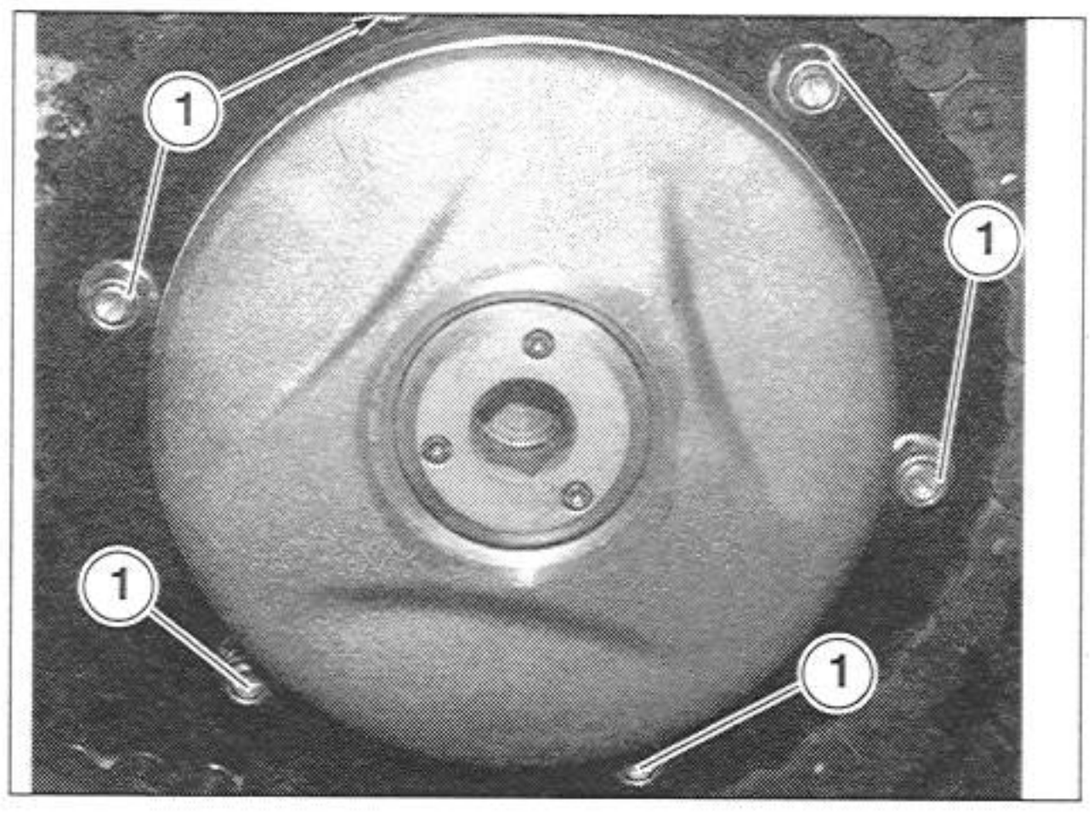

7.5 FRONT BRAKES

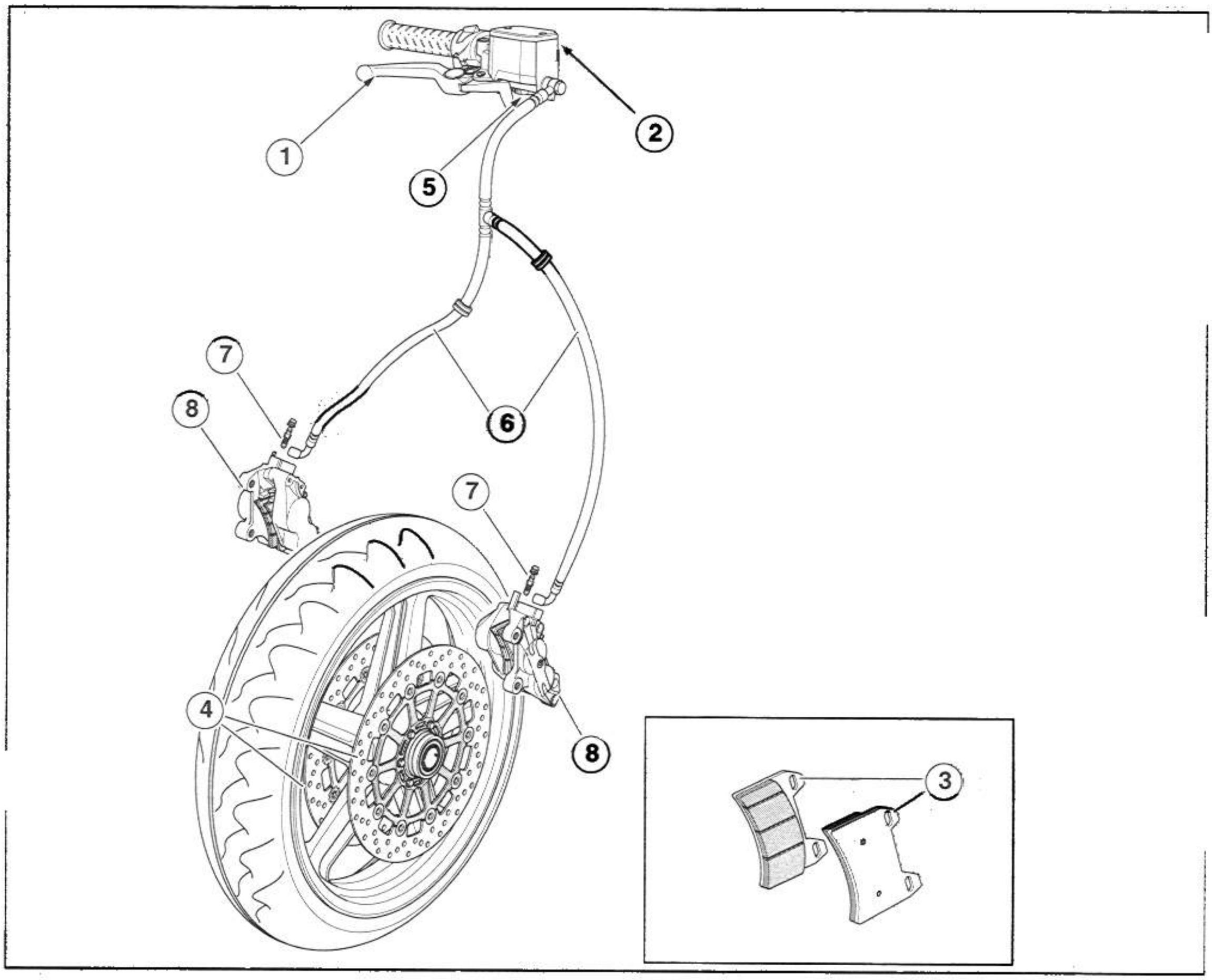

Legend:

1) Brake lever
2) Brake fluid pump
3) Brake pads
4) Brake discs
5) Brake light switch
6) Brake fluid lines from pump to clamps
7) Bleeder nipples
8) Brake calipers

For more information:

- see 1.3.5 (BRAKE FLUID);
- see 2.16 (CHECKING AND TOPPING UP THE FRONT BRAKE FLUID);
- see 2.19 (BLEEDING THE BRAKE SYSTEMS);
- see 2.27 (CHECKING THE BRAKE PAD WEAR);
- see 8.4.5 (FRONT BRAKE SYSTEM).

⚠ WARNING

When disassembling/reassembling the brake caliper, replace the clamp fastening screws with two new screws of the same type.

7.5.1 CHANGING THE BRAKE PADS

Carefully read 1.3.9 (PRECAUTIONS AND GENERAL INFORMATION) and 2.27 (CHECKING THE BRAKE PAD WEAR).

- Place the vehicle on the center stand.

NOTE The following steps refer to a single clamp, but are applicable to both.

- Use a pair of pliers to grasp the head of one piston, then the other, and turn them just far enough to bring the two pin locks (1) into a position from which they may be extracted.
- Remove the two pin locks (1).
- Remove the two pins (2).
- Retrieve the protective cover (3).

NOTE Using a pair of pliers, take first one pad then the other, and shake them gently back and forth to eliminate any pressure by the caliper pistons, and make it easier to remove the pads.

- Extract the two pads (4).

⚠ WARNING

Do not operate the brake lever after removing the pads, otherwise the caliper pistons could come out of their seat, causing brake fluid to leak out.

- Insert two new pads, placing them so that their holes are aligned with those on the clamp.

⚠ WARNING

Always replace both pads, and make sure they are correctly positioned inside the clamp.

- Place the protective cover (3) with the engraved arrow facing upwards.
- Insert the two pins (2).
- Insert the two pin locks (1).
- Check the brake fluid level, 2.16 (CHECKING AND TOPPING UP THE FRONT BRAKE FLUID).

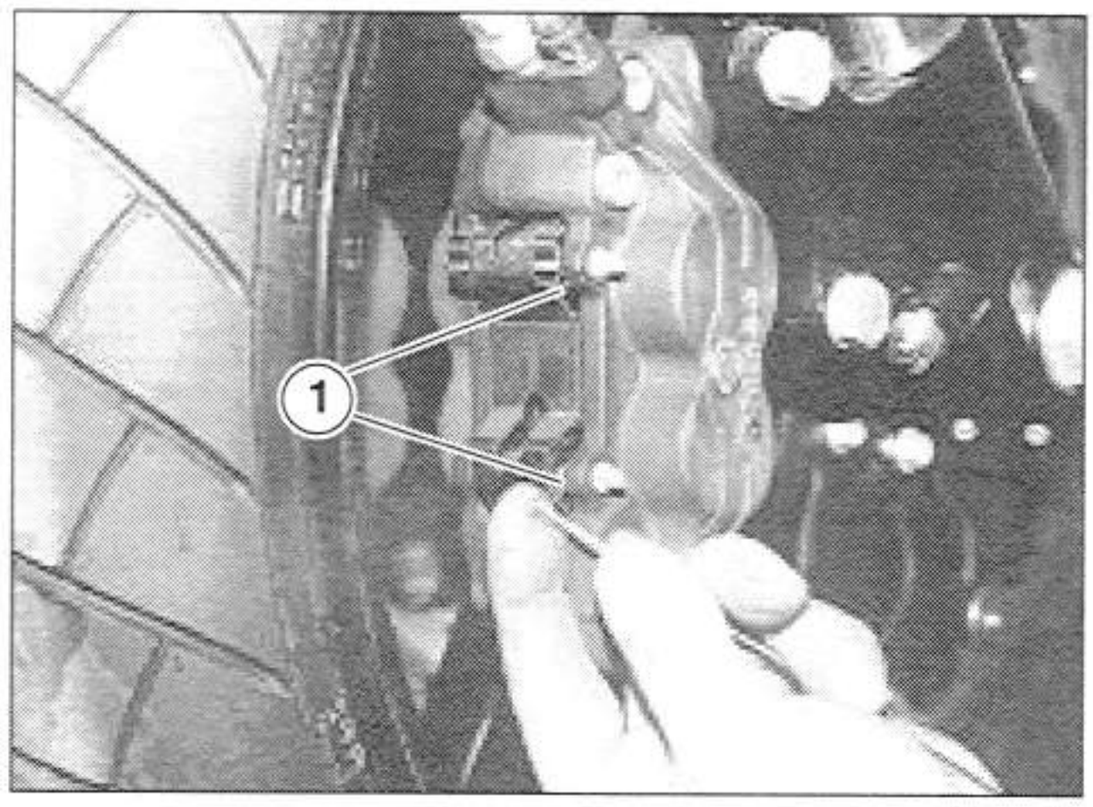

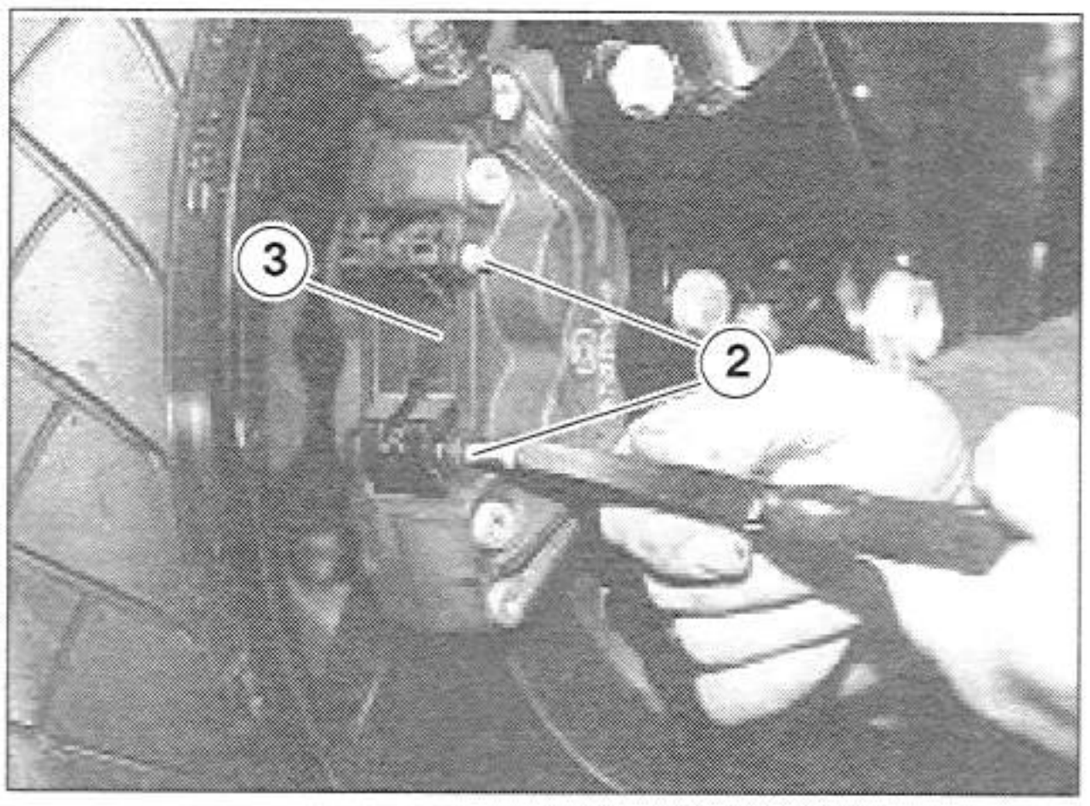

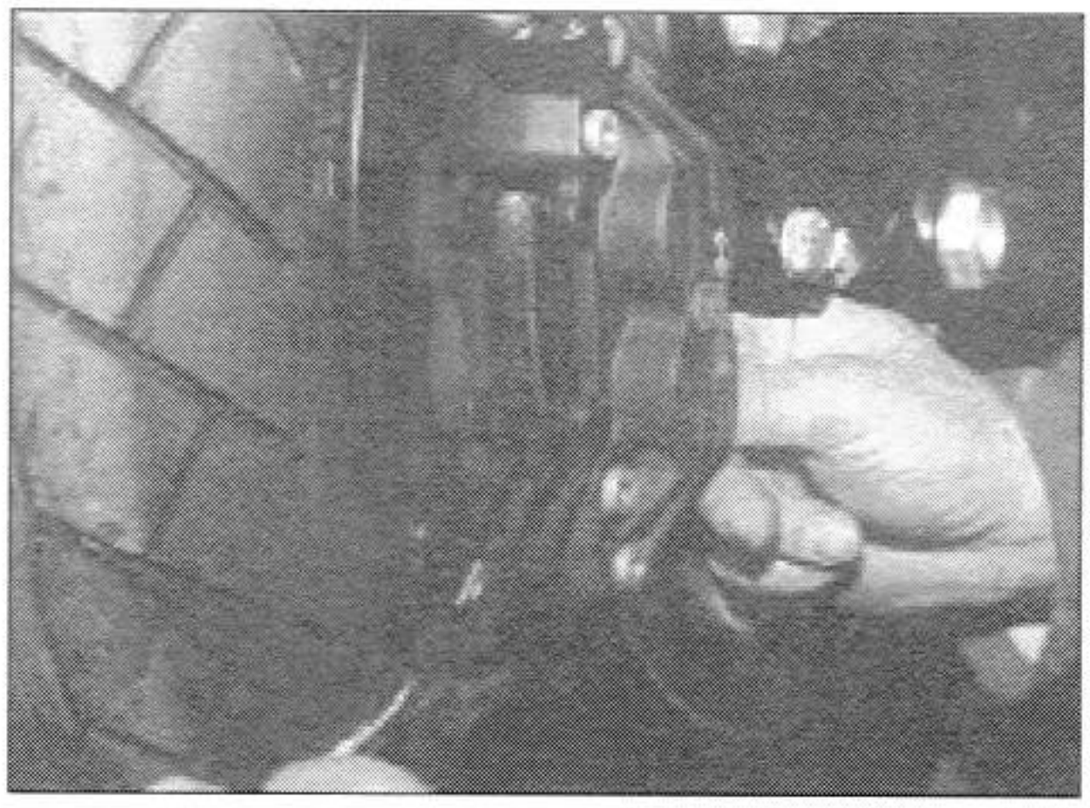

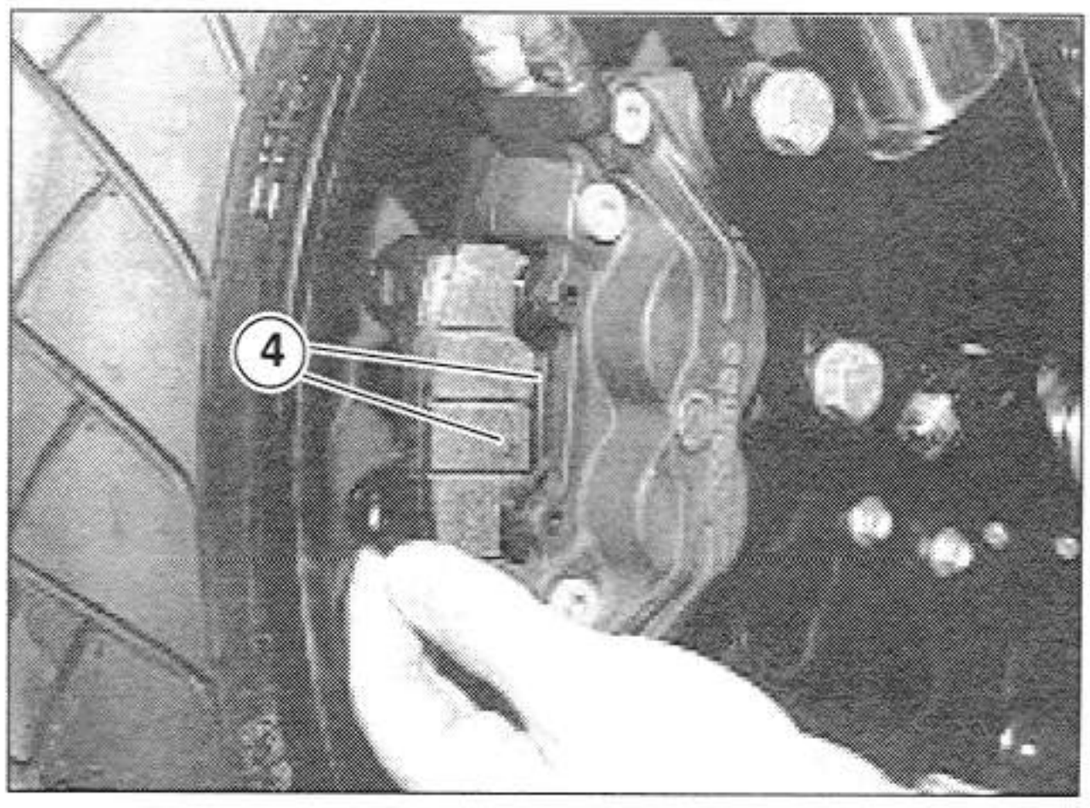

7.5.2 CHECKING THE BRAKE DISCS

NOTE The operations described below should be carried out with the brake discs installed on the wheel; they refer to a single disc, but are applicable to both.

- Check the disc wear, using a micrometer gauge to measure the minimum thickness at various points on the disc.
  If the smallest thickness is below the minimum value, even in a single part of the disc, replace the disc.

Minimum disc thickness: 0.18 in (4.5 mm).

- Use a dial indicator to make sure that the disc does not wobble beyond the stated tolerance; otherwise replace it, see 7.5.3 (REMOVING THE BRAKE DISCS).

Disc wobble tolerance: 0.01 in (0.3 mm).

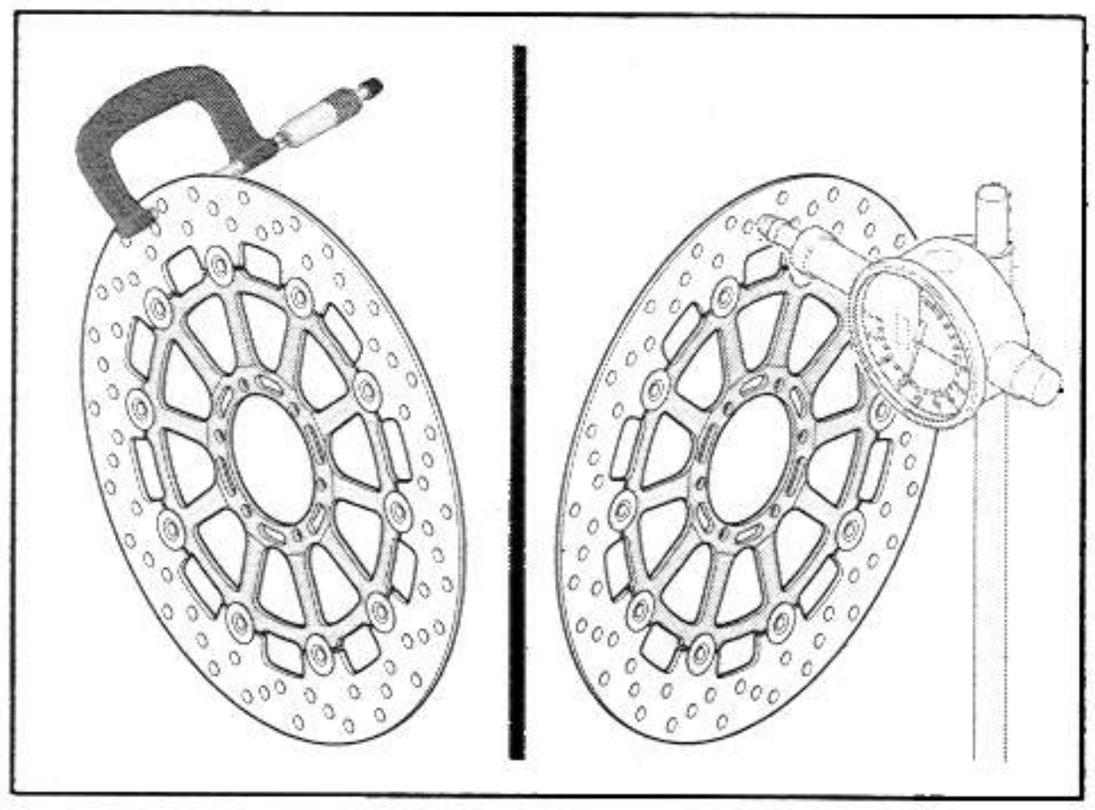

7.5.3 REMOVING THE BRAKE DISCS

Carefully read 0.5.1 (PRECAUTIONS AND GENERAL INFORMATION).

- Remove the front wheel, see 7.2.1 (REMOVING THE COMPLETE WHEEL).

NOTE The following information refers to a single disc, but is applicable to both.
To unscrew the screws (1), we recommend using an impact wrench, which delivers the sharp blow needed to release the screws from the LOCTITE® 243.

- Unscrew and remove the six brake disc screws (1).

⚠ WARNING

When reassembling, apply LOCTITE® 243 to the thread of the brake disc screws.

NOTE When reassembling, screw all the screws (1) by hand and cross-tighten in the following order: A-B-C-D-E-F.

Tightening torque for brake disc screws (1): 22.1 ftlb (30 Nm).

- Remove the brake disc (2).

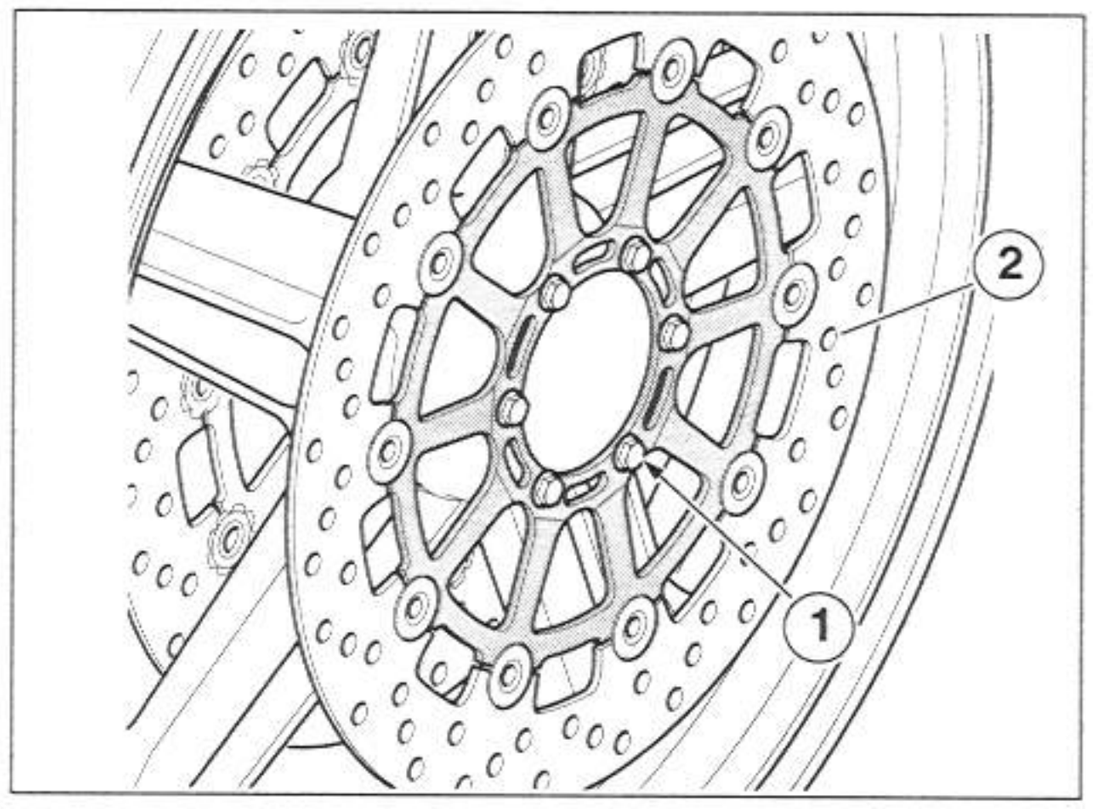

7.5.4 REMOVING THE BRAKE MASTER CYLINDER

See 7.1.15 (REMOVING THE FRONT BRAKE CONTROL).

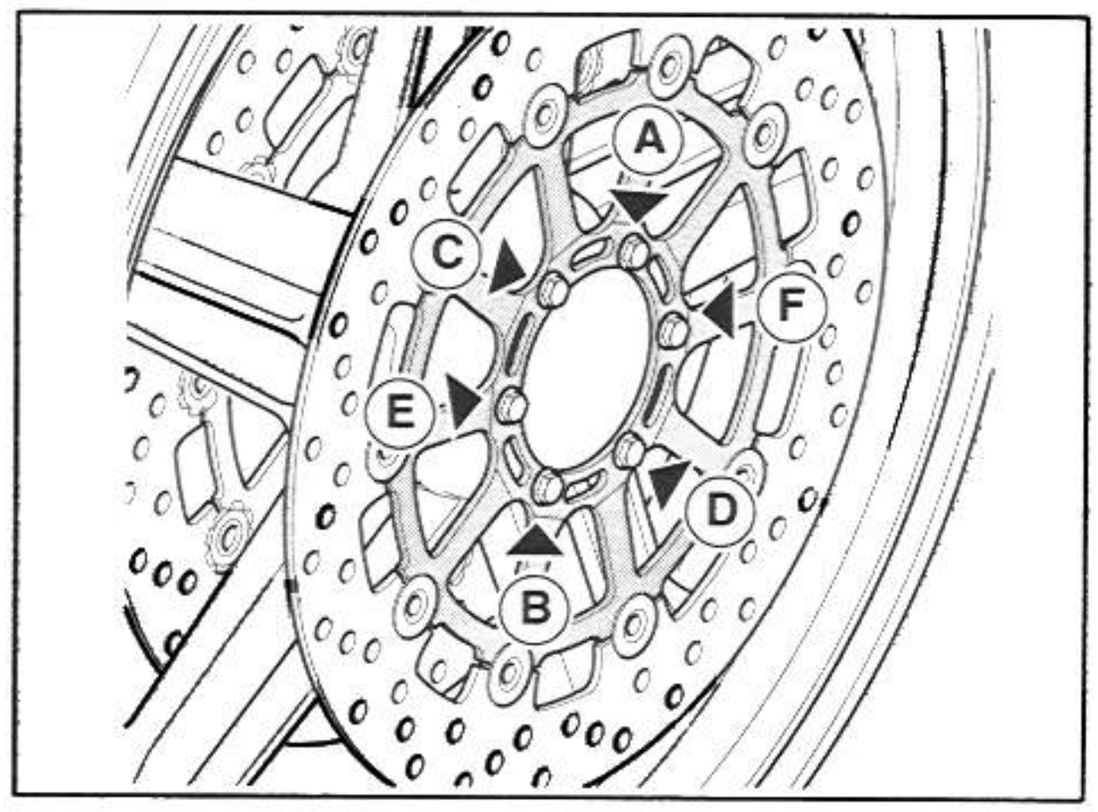

7.6 REAR BRAKE

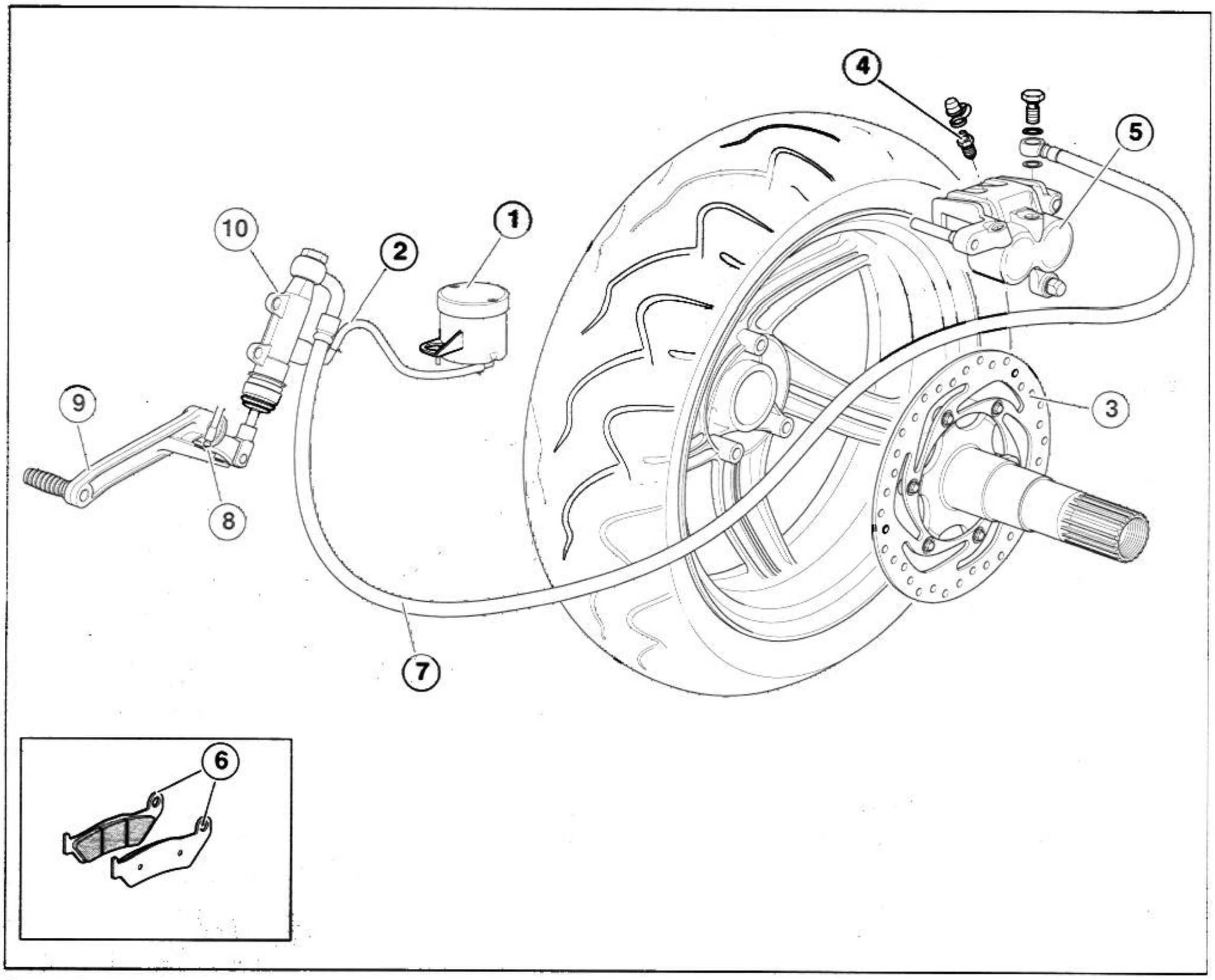

Legend:

1) Brake fluid reservoir
2) Brake fluid line from tank to pump
3) Brake disc
4) Bleeder nipple
5) Brake caliper
6) Brake pads
7) Brake fluid line from pump to caliper
8) Rear brake light switch
9) Brake pedal
10) Brake master cylinder

For more information:

- see 1.3.5 (BRAKE FLUID);
- see 2.17 (CHECKING AND TOPPING UP THE REAR BRAKE FLUID);
- see 2.19 (BLEEDING THE BRAKE SYSTEMS);
- see 2.25 (ADJUSTING THE CLEARANCE OF THE REAR BRAKE LEVER);
- see 2.27 (CHECKING THE BRAKE PAD WEAR);
- see 8.4.6 (REAR BRAKE SYSTEM).

⚠ WARNING

When disassembling/reassembling the brake caliper, replace the clamp fastening screws with two new screws of the same type.

7.6.1 CHANGING THE BRAKE PADS

Carefully read 1.3.9 (PRECAUTIONS AND GENERAL INFORMATION) and 2.27 (CHECKING THE BRAKE PAD WEAR).

- Place the vehicle on the center stand.

NOTE It will be easier to work if you remove the rear wheel, 7.3.1 (REMOVING THE COMPLETE WHEEL).

- Remove the two cotter pins (1).
- Slide the pivot (2) out from the right side.
- Remove the brake pads (3).
- Retrieve the safety springs (4).

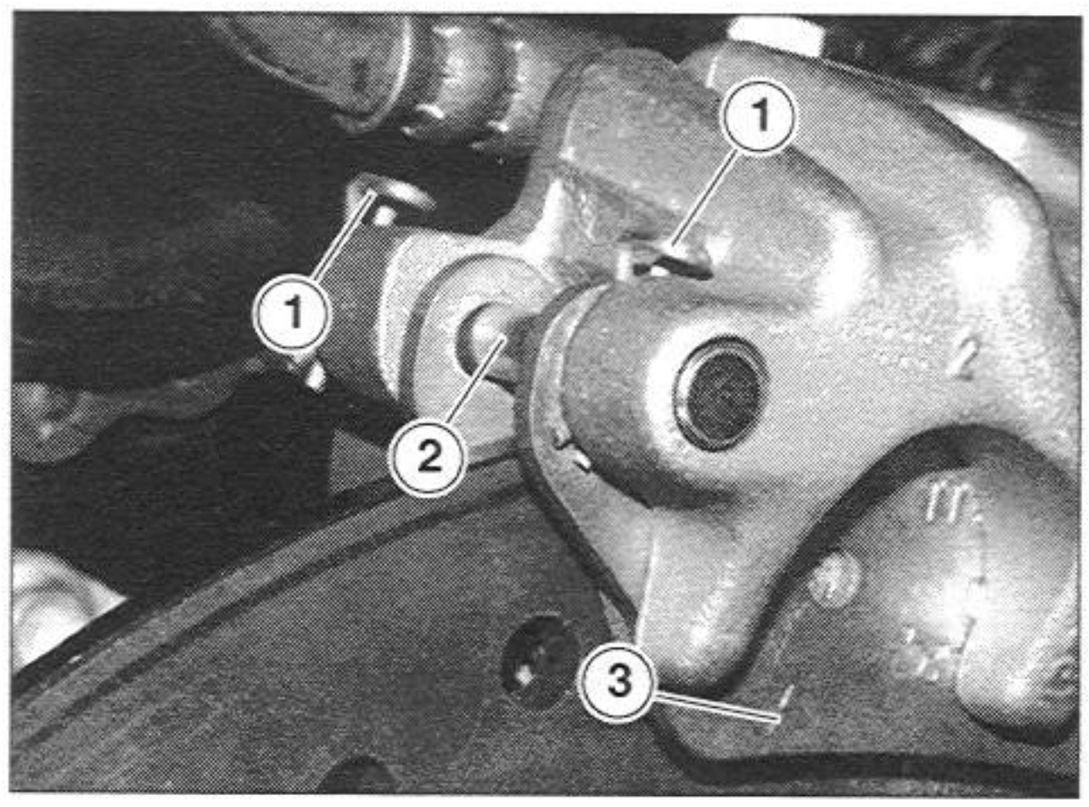

⚠ WARNING

Do not operate the brake lever after removing the pads, otherwise the caliper pistons could come out of their seat, causing brake fluid to leak out.

- Insert two new pads, placing them so that their holes are aligned with those on the clamp.

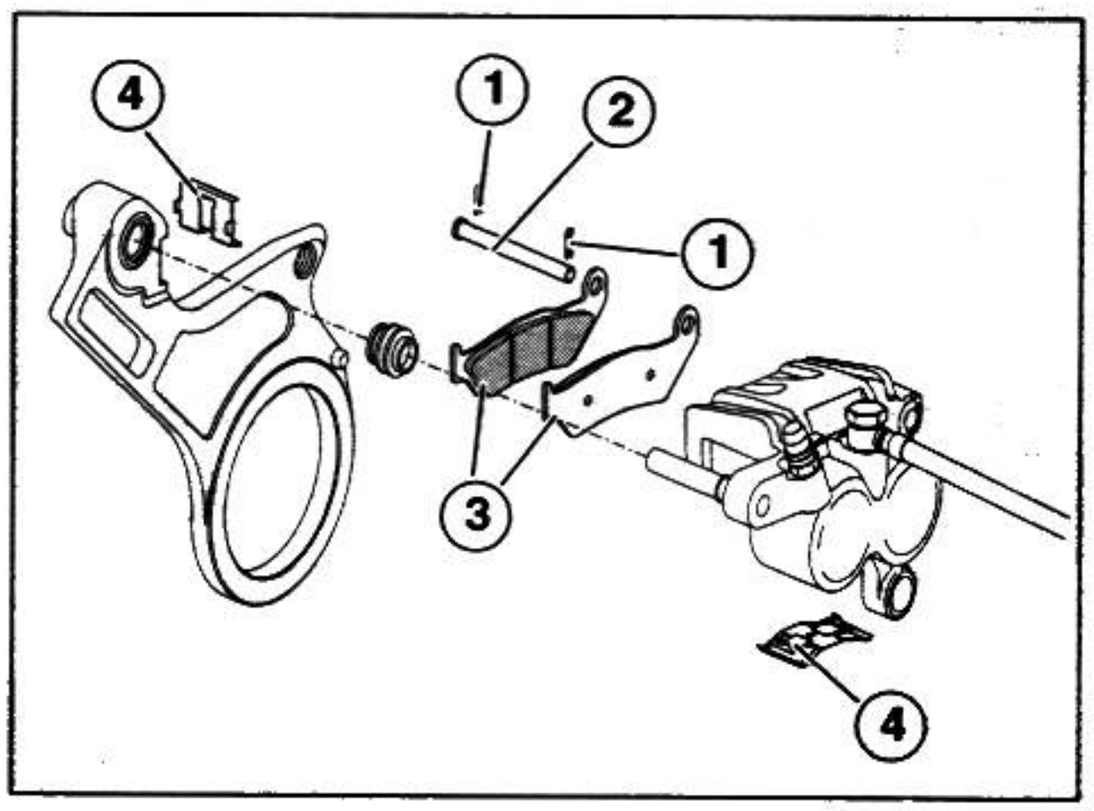

⚠ WARNING

Always replace both pads, and make sure they are correctly positioned inside the clamp.

- When reassembling, be sure to place the two safety springs (4) correctly.
- Check the brake fluid level, see 2.17 (CHECKING AND TOPPING UP THE REAR BRAKE FLUID).

7.6.2 REMOVING THE REAR BRAKE CALIPER

Carefully read 1.3.9 (PRECAUTIONS AND GENERAL INFORMATION).

- Place the vehicle on the center stand.

NOTE For space reasons, it is advisable to remove the rear wheel, see 7.3.1 (REMOVING THE COMPLETE WHEEL).

- Slide out the safety spring (1).
- Unscrew and remove the screw (2).

Tightening torque for screw (2): 18 ftlb (25 Nm).

- Turn the caliper (3) upwards.
- Slide the caliper (3) out from the left.
- The caliper (3) remains attached to the rear brake line (4).
- If necessary, empty the rear brake system, see 2.22 (CHANGING THE REAR BRAKE FLUID).
- Unscrew and remove the screw (5) and retrieve the two gaskets (6).

Tightening torque for screw (5): 14.5 ftlb (20 Nm).

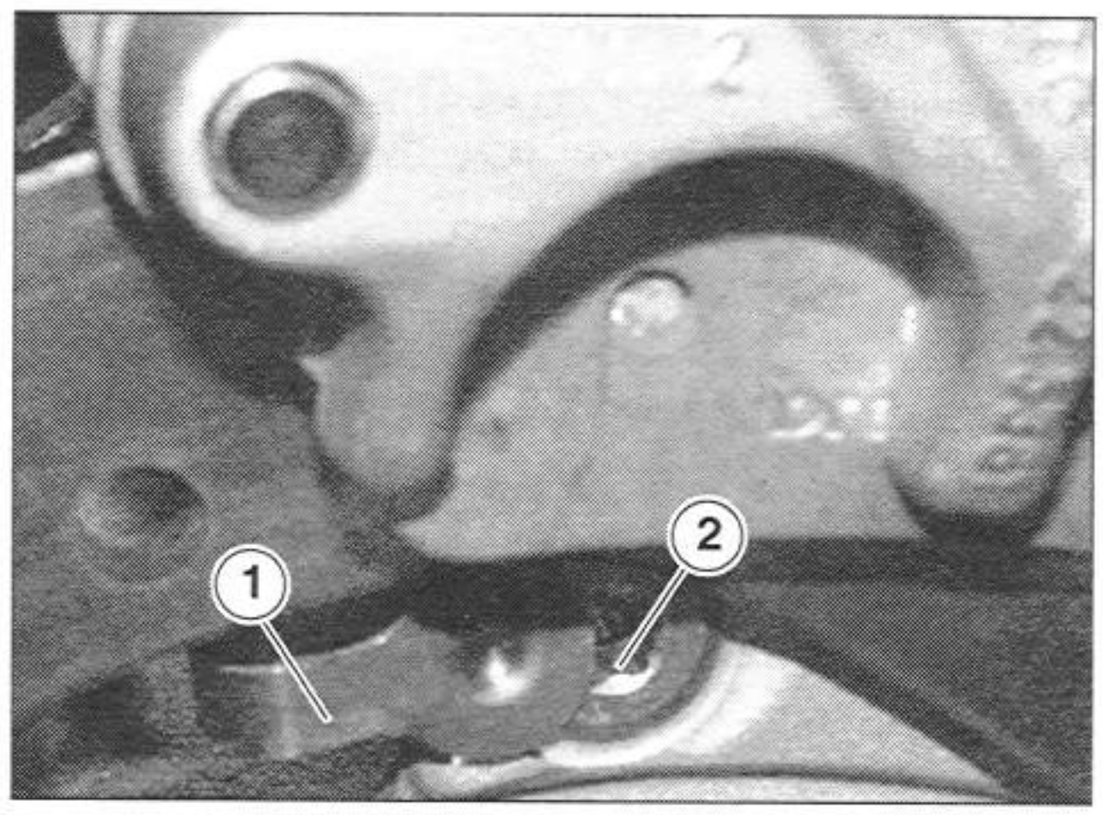

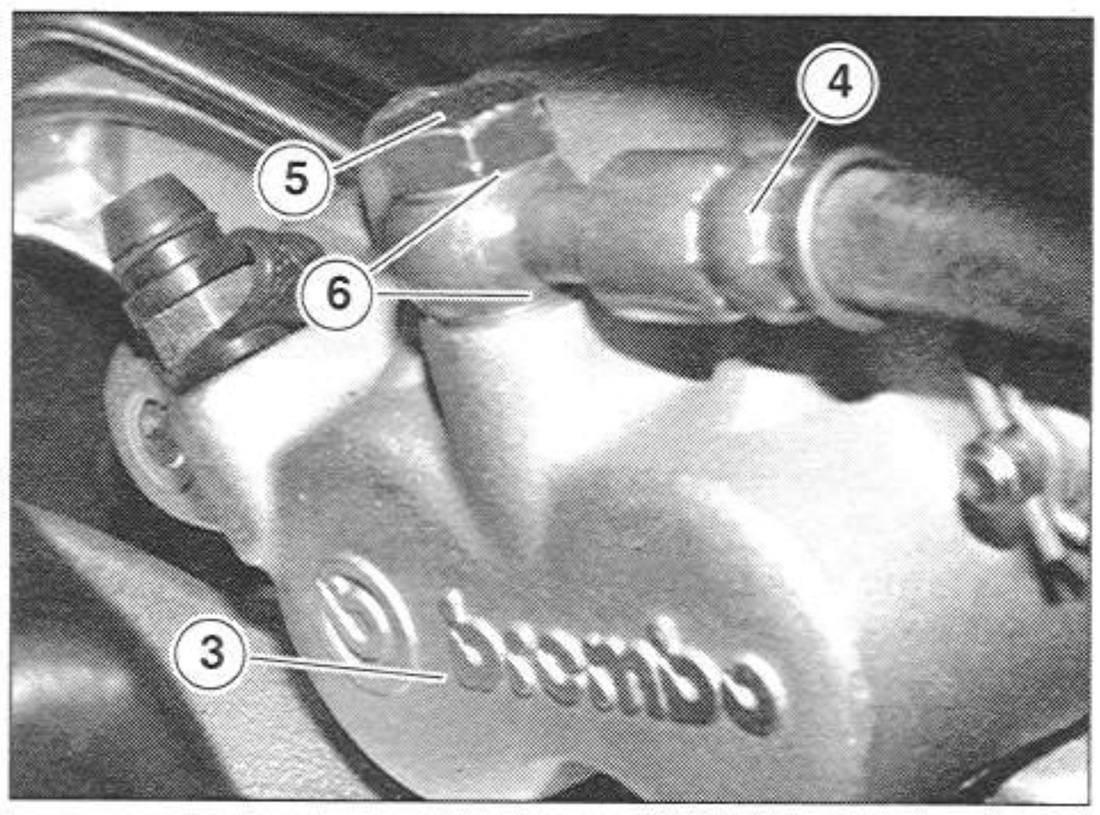

7.6.3 CHECKING THE BRAKE DISC

NOTE These operations should be carried out with the brake disc installed on the wheel.

- Check the disc wear, using a micrometer gauge to measure the minimum thickness at various points on the disc.

NOTE If the smallest thickness is below the minimum value, even in a single part of the disc, replace the disc, see 7.6.4 (REMOVING THE BRAKE DISC).

Minimum disc thickness: 0.18 in (4.5 mm).

- Use a dial indicator to make sure that the disc does not wobble beyond the stated tolerance; otherwise replace it, see 7.6.4 (REMOVING THE BRAKE DISC).

Disc wobble tolerance: 0.01 in (0.3 mm).

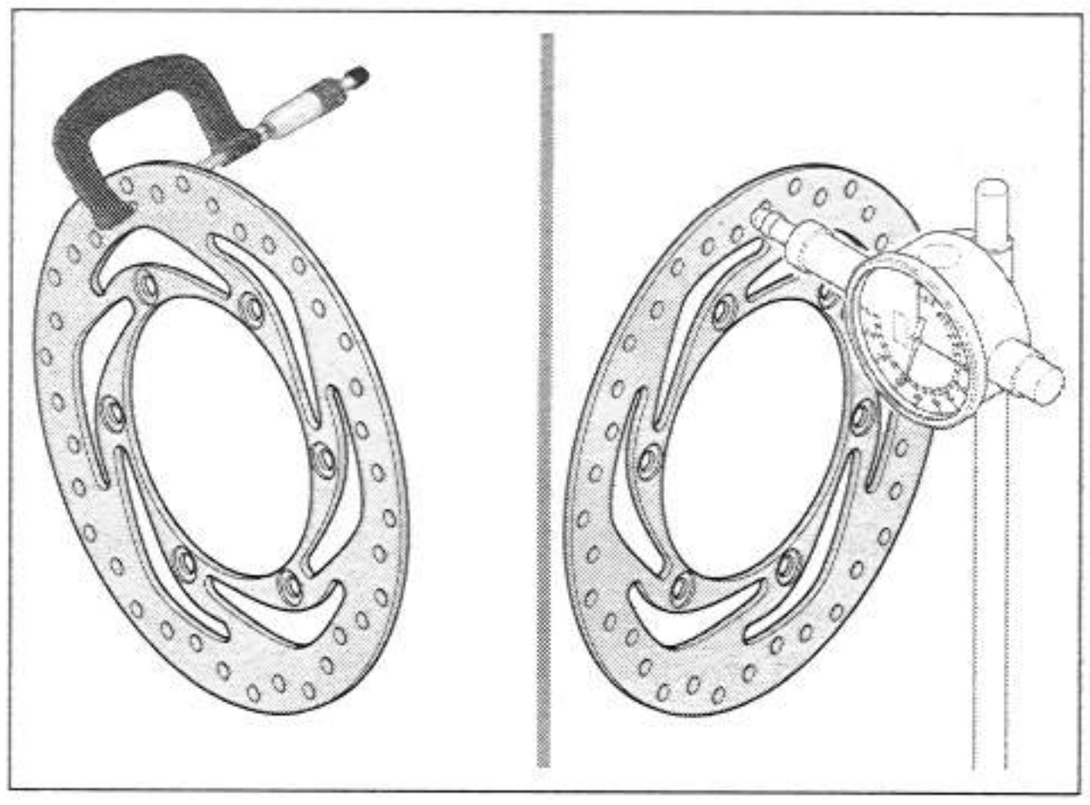

7.6.4 REMOVING THE BRAKE DISC

Carefully read see 1.3.9 (PRECAUTIONS AND GENERAL INFORMATION).

- Remove the final drive assembly, see 7.4.1 (REMOVING THE FINAL DRIVE ASSEMBLY).
- Slip the brake caliper off the disc, see 7.6.2 (REMOVING THE REAR BRAKE CALIPER).
- Remove the clamp plate (1).
- Place the piston, complete with disc, on the vice, inserting a soft material (aluminum) between the jaws.

NOTE To unscrew the screws (2), we recommend using an impact wrench, which delivers the sharp blow needed to release the screws from the LOCTITE® 243.

- Unscrew and remove the six screws (2).

⚠ WARNING

When reassembling, apply LOCTITE® 243 to the thread of the screws (2).

NOTE When reassembling, insert all screws by hand and cross-tighten in the following order: A-B-C-D-E-F.

Tightening torque for brake disc screws (2): 21.7 ftlb (30 Nm).

- Remove the brake disc (3).

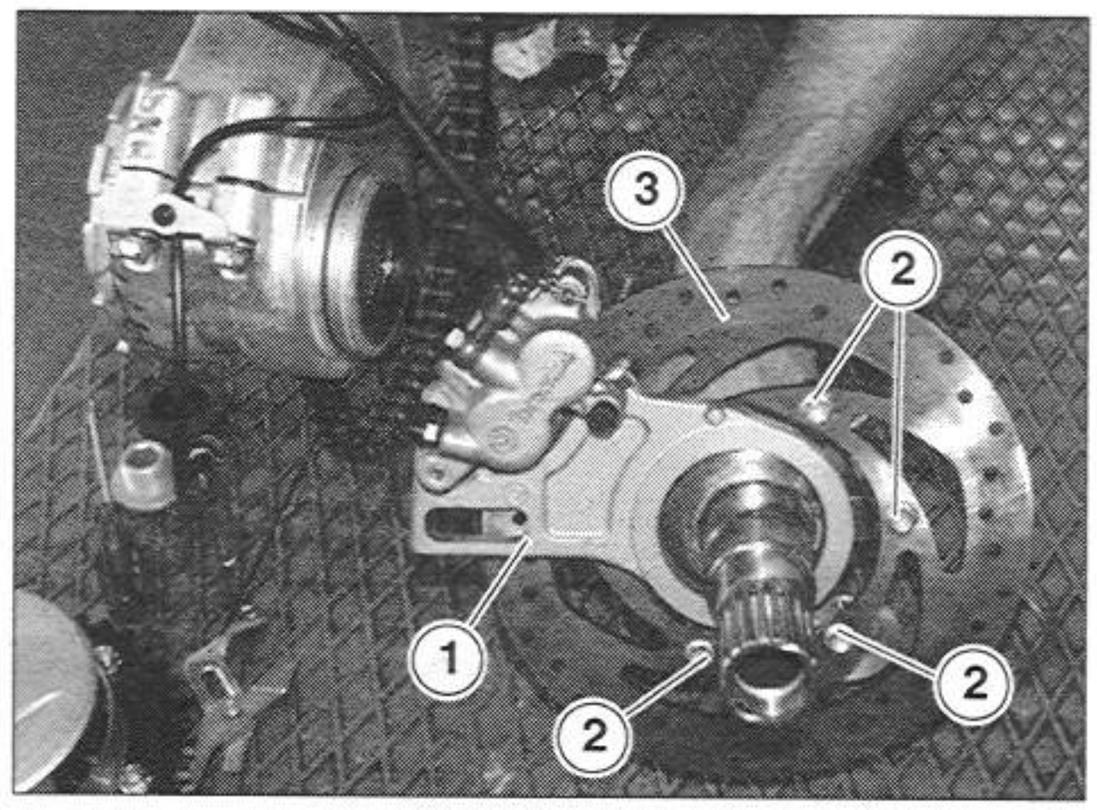

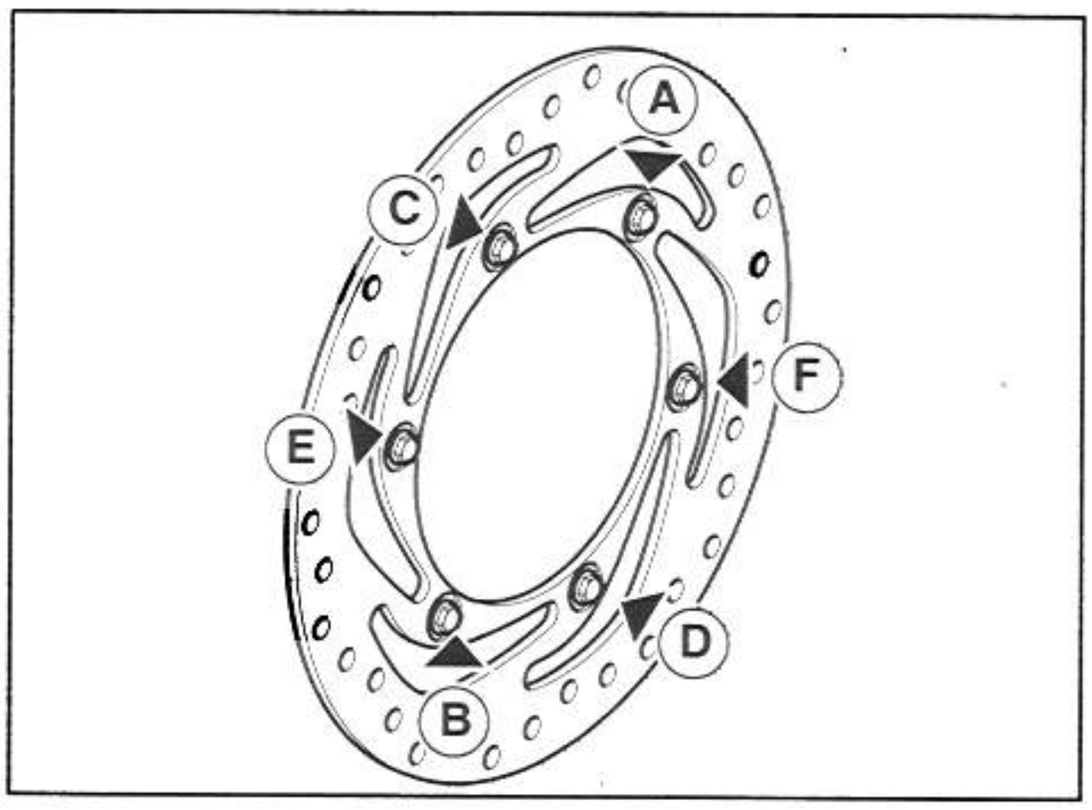

7.6.5 REMOVING THE BRAKE MASTER CYLINDER

- Remove the right lower fairing, see 7.1.33 (REMOVING THE LOWER FAIRING).
- Carry out the first three steps described in the paragraph see 2.22 (CHANGING THE REAR BRAKE FLUID).
- When all the fluid has drained out, unscrew and remove the screw (1) and retrieve the two seals.

Tightening torque for screw (1): 14.5 ftlb (20 Nm).

- Loosen and remove the click clamp (2).
- Pull the hose (3) from the fitting on the master cylinder.
- Unscrew and remove the two screws (4).

Tightening torque for screws (4): 7.3 ftlb (10 Nm).

- Retrieve the guard (5).
- Slide the master cylinder (6) out.

NOTE When reassembling top up brake fluid, see 2.17 (CHECKING AND TOPPING UP THE REAR BRAKE FLUID) and bleed the brake system, see 2.19 (BLEEDING THE BRAKE SYSTEMS).

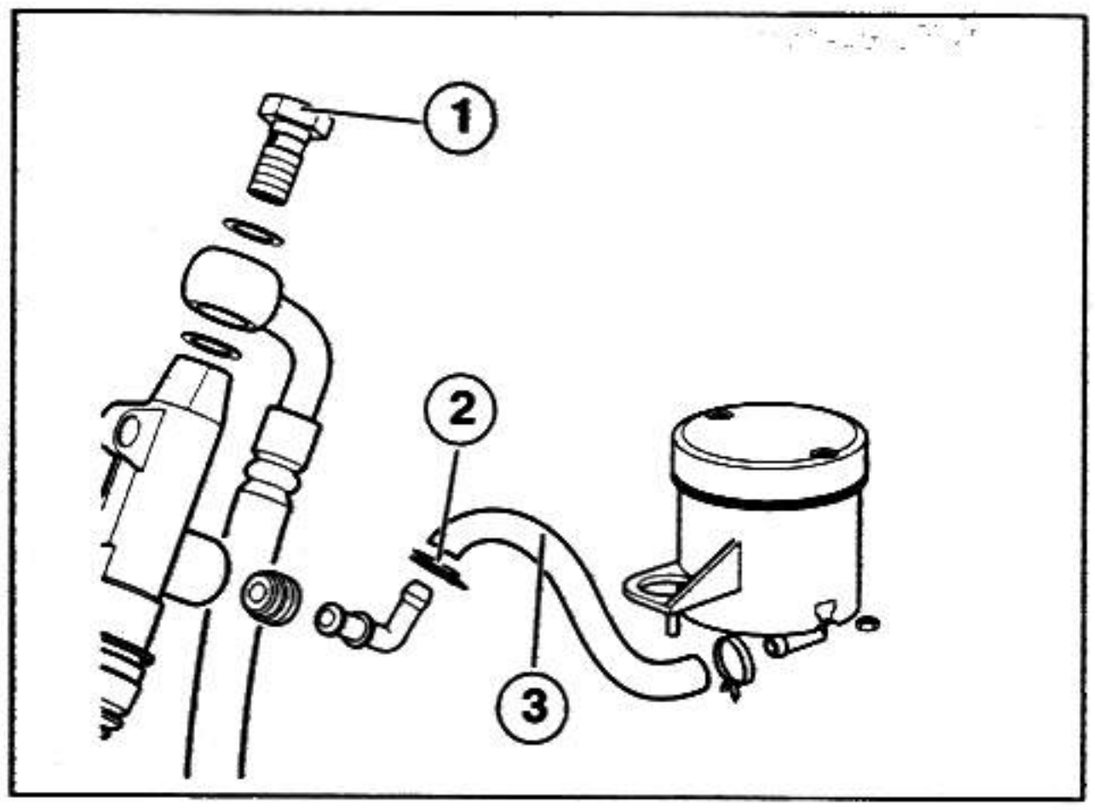

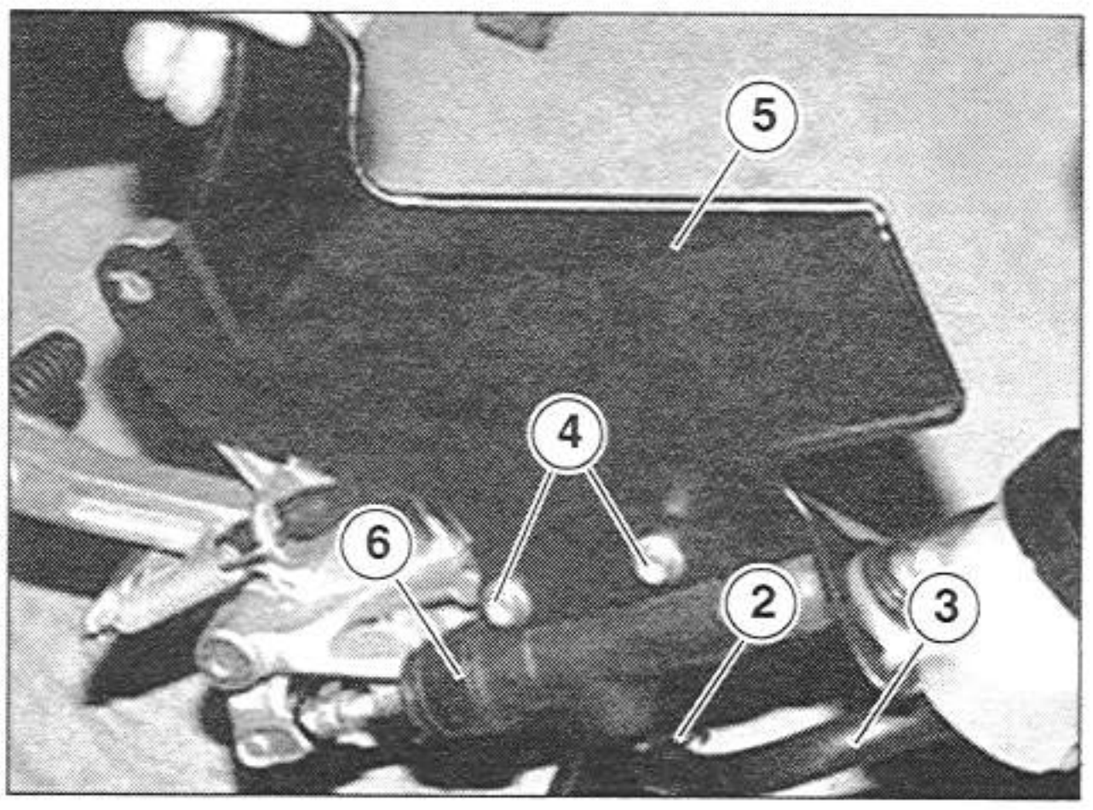

7.7 STEERING

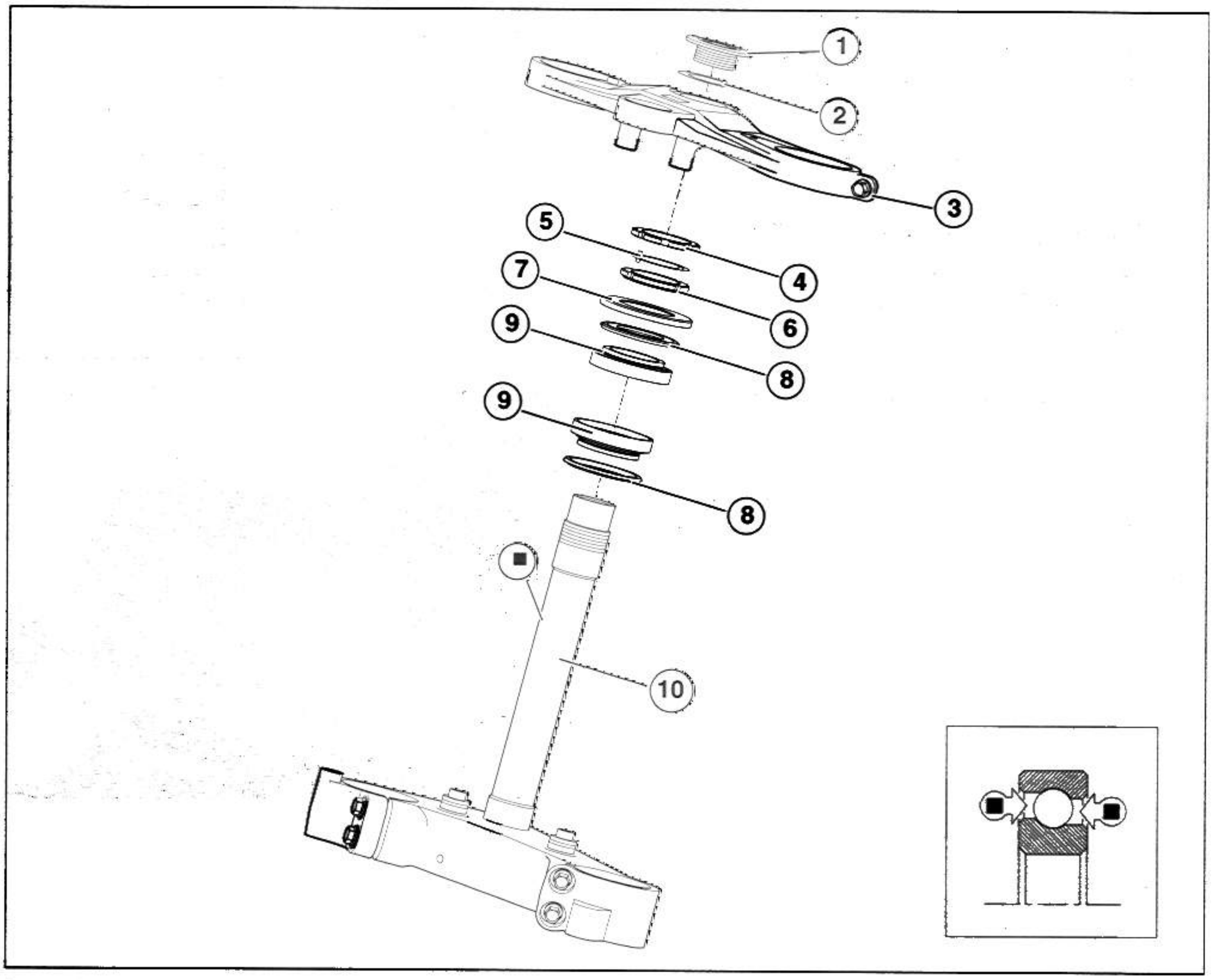

Legend:

1) Upper bushing
2) Washer
3) Fork head
4) Locking ring nut
5) Locking washer
6) Adjustment ring-nut
7) Protective cover
8) Dust seal
9) Bearings
10) Triple clamp

■= GREASE, see 1.12 (LUBRICANT CHART).

For more information:

- see 2.28 (STEERING);
- see 2.29 (INSPECTING THE FRONT SUSPENSION).

7.7.1 DISASSEMBLING THE STEERING

Carefully read 1.3.9 (PRECAUTIONS AND GENERAL INFORMATION) and 2.28 (STEERING).

- Place the vehicle on a lift platform on the center stand.
- Carry out the first eleven steps described in the chapter see 2.28.2 (ADJUSTING THE BEARING PLAY).
- Unscrew and remove the screw (1).
- Retrieve the bracket (2).
- Slide out both fork tubes, see 7.8.3 (DISASSEMBLING THE LOWER FORK TUBE/UPPER FORK TUBE UNIT).
- Use the special socket wrench OPT to loosen and remove the lock ring adjuster (3).

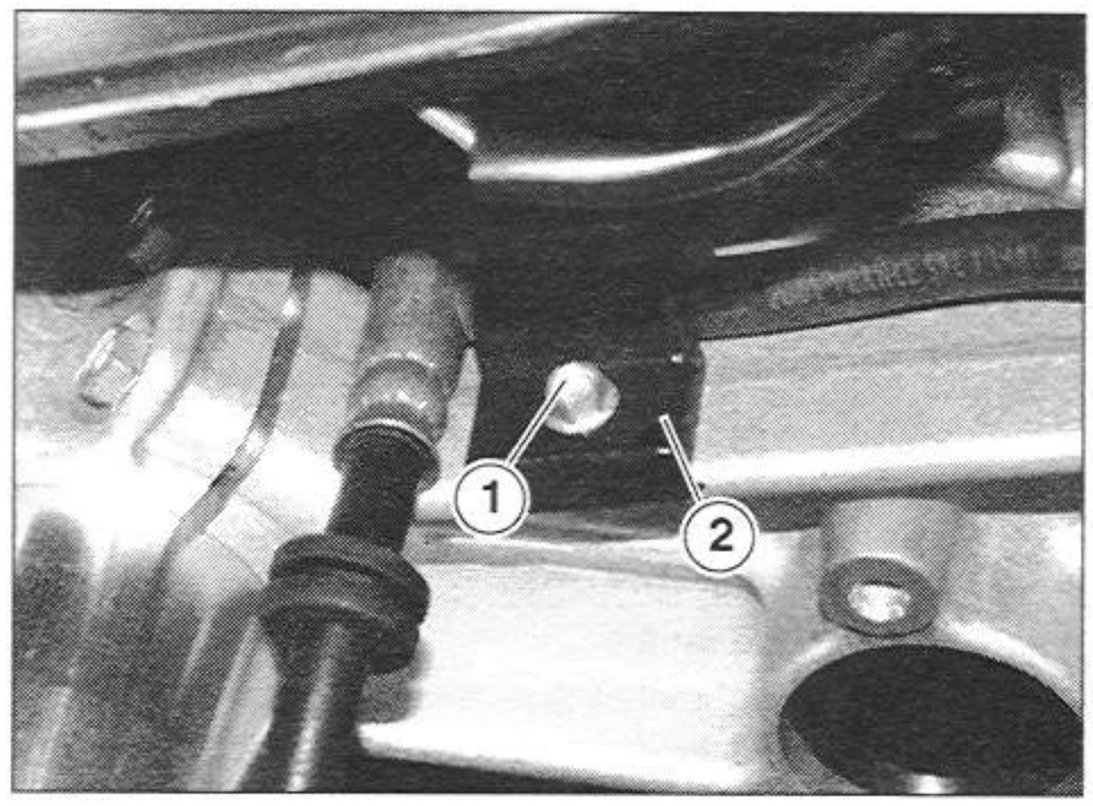

⚠ WARNING

Due to the weight of the front fork, the following operations must be carried out by two mechanics.
Before starting, agree which mechanic will handle which operations.
Proceed very carefully with removal operations.
While removing the front fork, be careful that the brake fluid line does not catch on anything.

- While one person holds the front fork in position, slowly raise the lift platform until you are able to slide the steering head out of the front fork.
- Retrieve the dust ring (4).
- Remove the upper dust ring (5).
- Extract the bearing (6).
- Use a special extractor to remove the lower bearing (7) and lower dust ring (8).

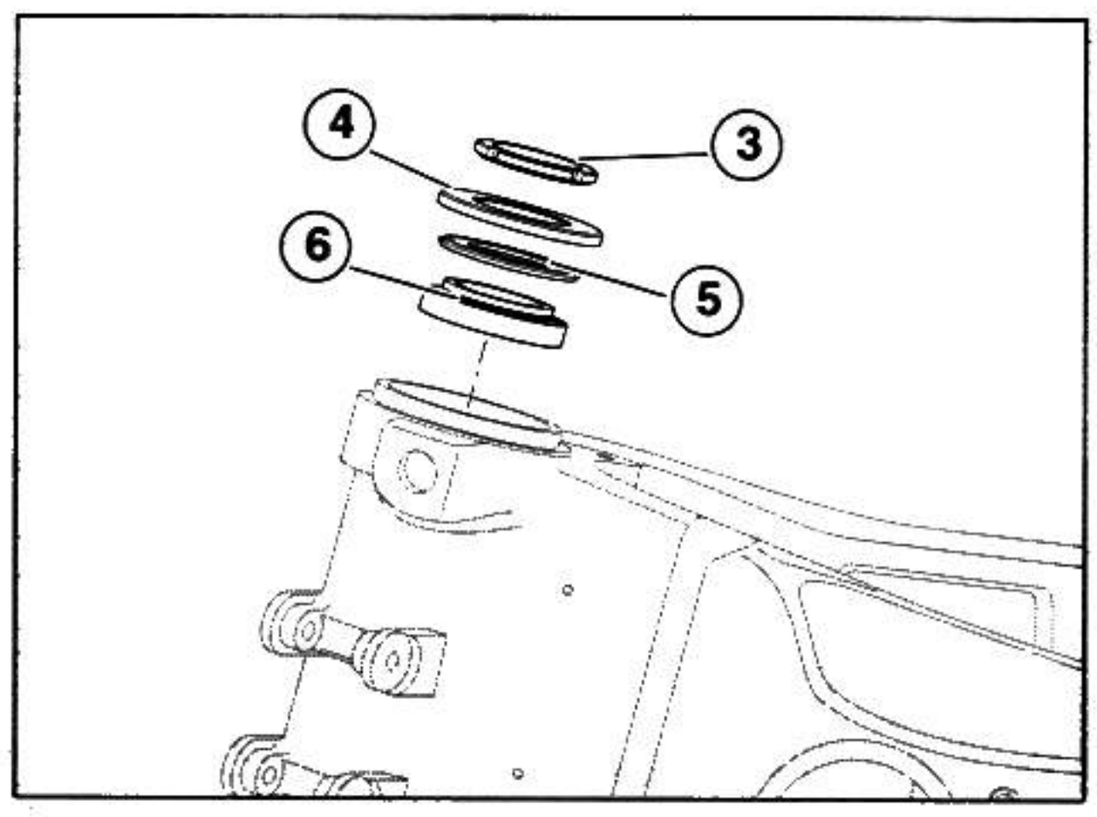

⚠ WARNING

When reassembling, insert the bearings using a drift with the same diameter as the outer ring of the bearings.
Do not strike the balls and/or inner race.
Make sure that the bearings are perfectly nestled.
Wash all components with clean solvent.

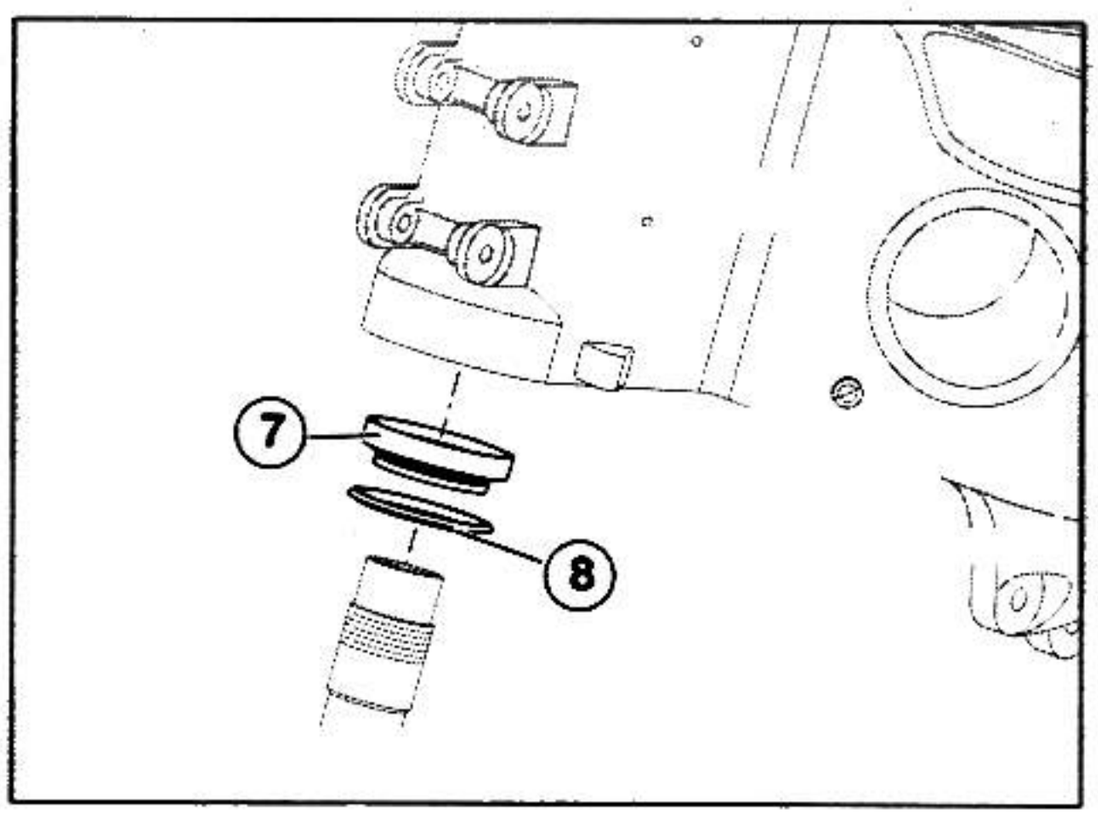

7.7.2 CHECKING THE COMPONENTS

⚠ WARNING

Make sure all components are undamanged, especially those listed below.

BEARINGS AND GASKETS see 7.2.3 (CHECKING THE COMPONENTS).

7.7.3 REASSEMBLING THE STEERING

NOTE For reassembly, the vehicle and front fork must be placed as for disassembly. Then proceed with the same steps in reverse order from disassembly.

- Spread a light coating of grease along the entire length of the pivot (1), see 1.12 (LUBRICANT CHART).
- Before fully tightening the adjusting ring nut (2), turn the steering several times in both directions to allow the bearings to settle.
- Proceed with adjusting the bearing play, see 2.28.2 (ADJUSTING THE BEARING PLAY).
- As you turn the handlebars, make sure that the cables and tubes are not pulled taut, twisted and/or crossed.
- Top up brake fluid, see 2.16 (CHECKING AND TOPPING UP THE FRONT BRAKE FLUID).

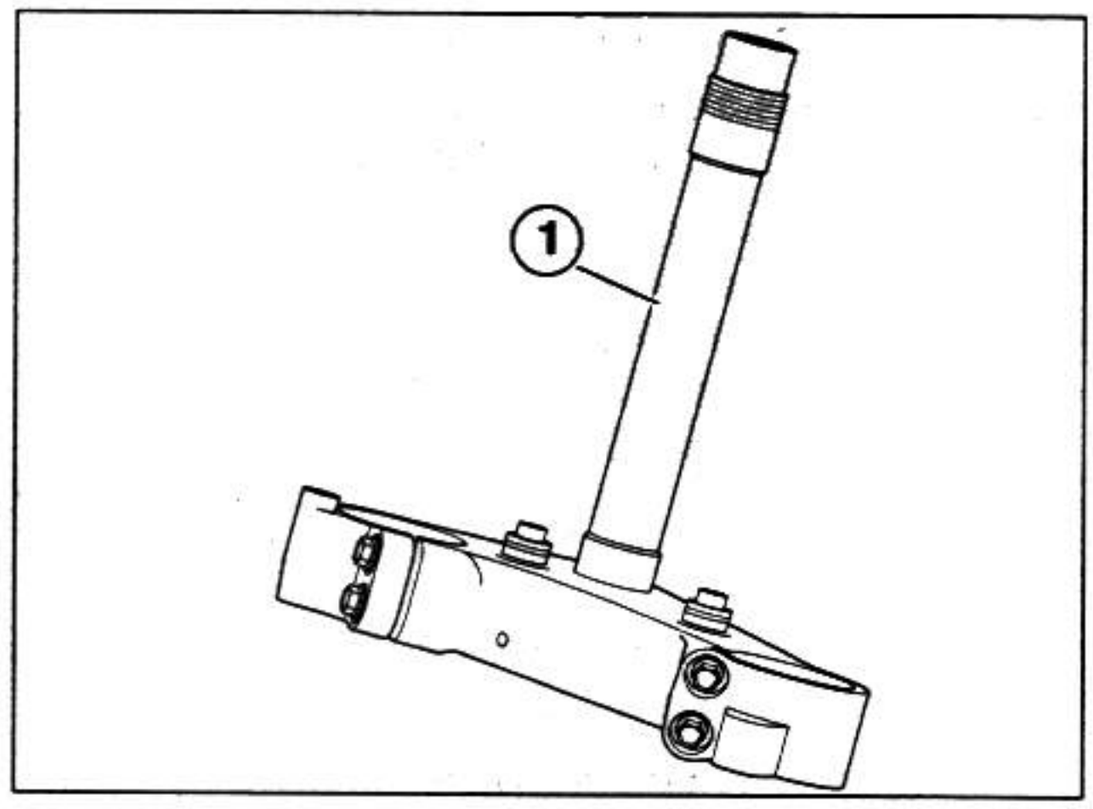

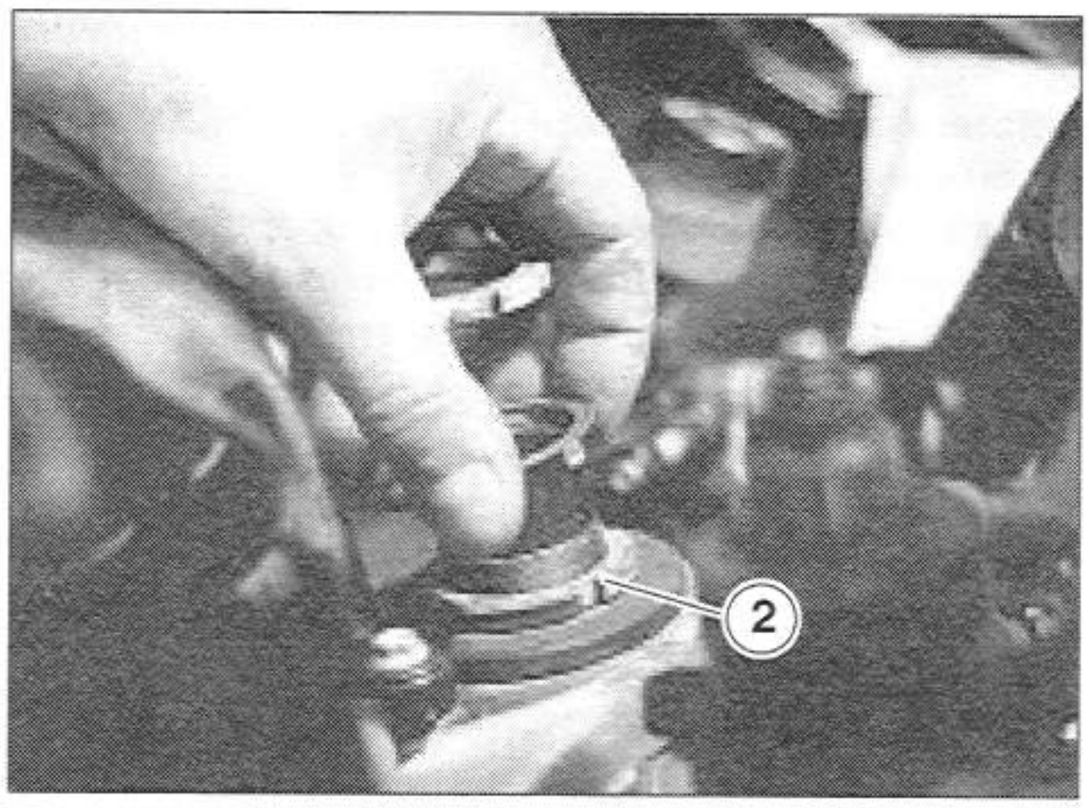

7.8 FRONT FORK

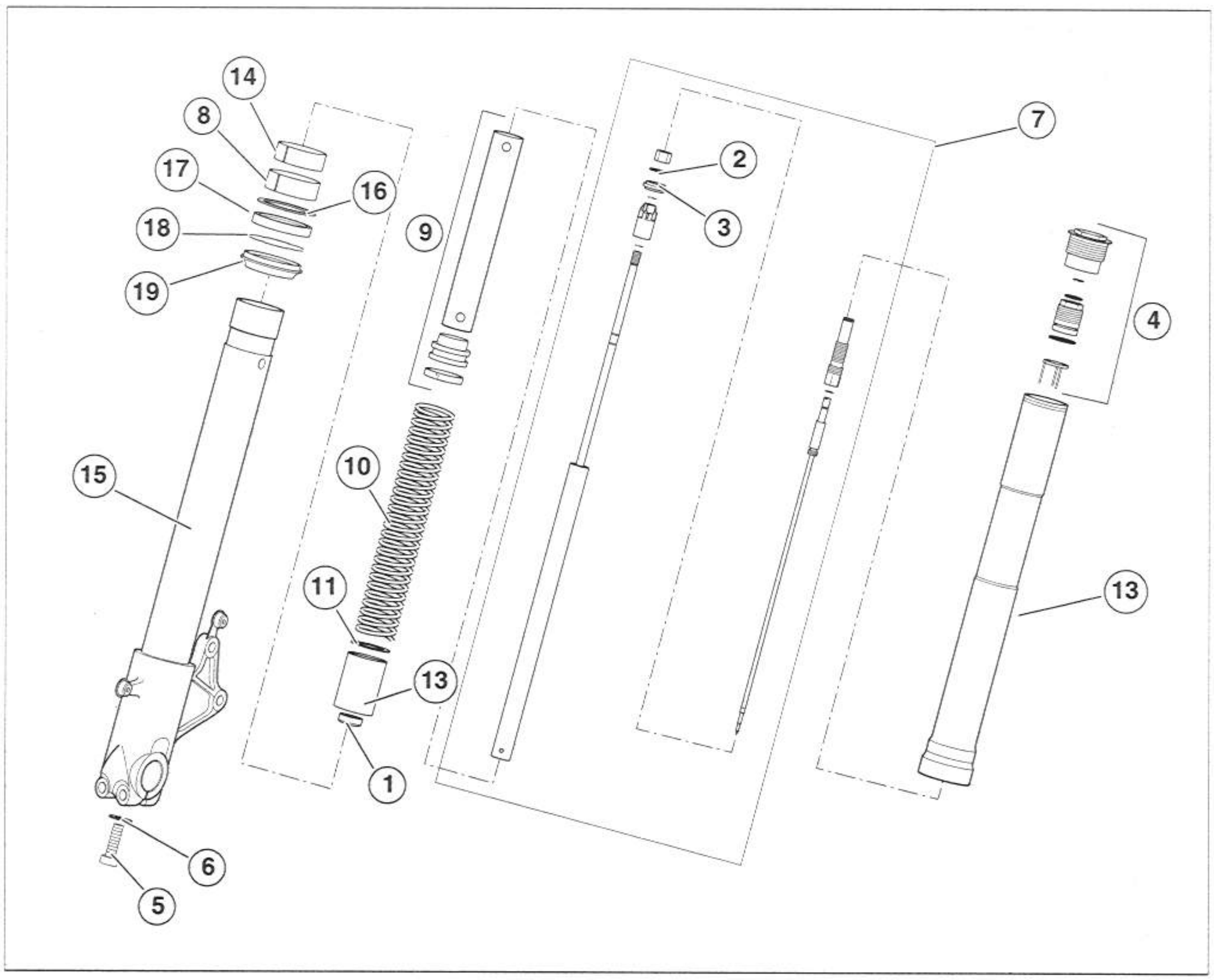

Legend:

1) Damper rod bushing
2) Retainer ring
3) Ring
4) Upper fork tube cap
5) Center screw
6) Copper washer
7) Complete damper
8) Bushing
9) Spring spacer tube
10) Spring
11) Lower spring seat
12) Lower collar
13) Upper fork tube
14) Sliding bushing
15) Lower fork tube
16) Ring
17) Bushing
18) Stop ring
19) Dust seal

7.8.1 CHANGING THE FORK OIL

Carefully read 1.4.2 (LUBRICANTS) and 2.29.2 (ADJUSTING THE FRONT FORK).

- Carry out the operations marked with the symbol " ● " described in the chapter 7.8.3 (DISASSEMBLING THE LOWER FORK TUBE/UPPER FORK TUBE UNIT).
- Carry out the operations marked with the symbol " ● " described in the chapter 7.8.5 (REASSEMBLING THE UPPER/LOWER FORK TUBE UNIT).

7.8.2 REMOVING THE FORK TUBES

Carefully read 1.3.9 (PRECAUTIONS AND GENERAL INFORMATION) and 2.29 (INSPECTING THE FRONT SUSPENSION).

NOTE The following steps refer to a single upper/lower fork tube unit, but are applicable to both.

⚠ WARNING

Do not remove an upper/lower fork tube unit without having first correctly reinstalled the other upper/ lower fork tube unit on the vehicle.

- Place the vehicle on the center support stand on a lift platform, with the front wheel protruding beyond the edge of the platform.
- Use belts to fasten the rear drive train to the platform so as to raise the front wheel.
- Remove the front wheel, see 7.2.1 (REMOVING THE COMPLETE WHEEL). It is not necessary to use the front support stand OPT.
- Remove the front fender, see 7.1.26 (REMOVING THE FRONT MUDGUARD).
- Unscrew and remove the two screws (1) and slide off both brake calipers (2), leaving them fastened to the brake line.

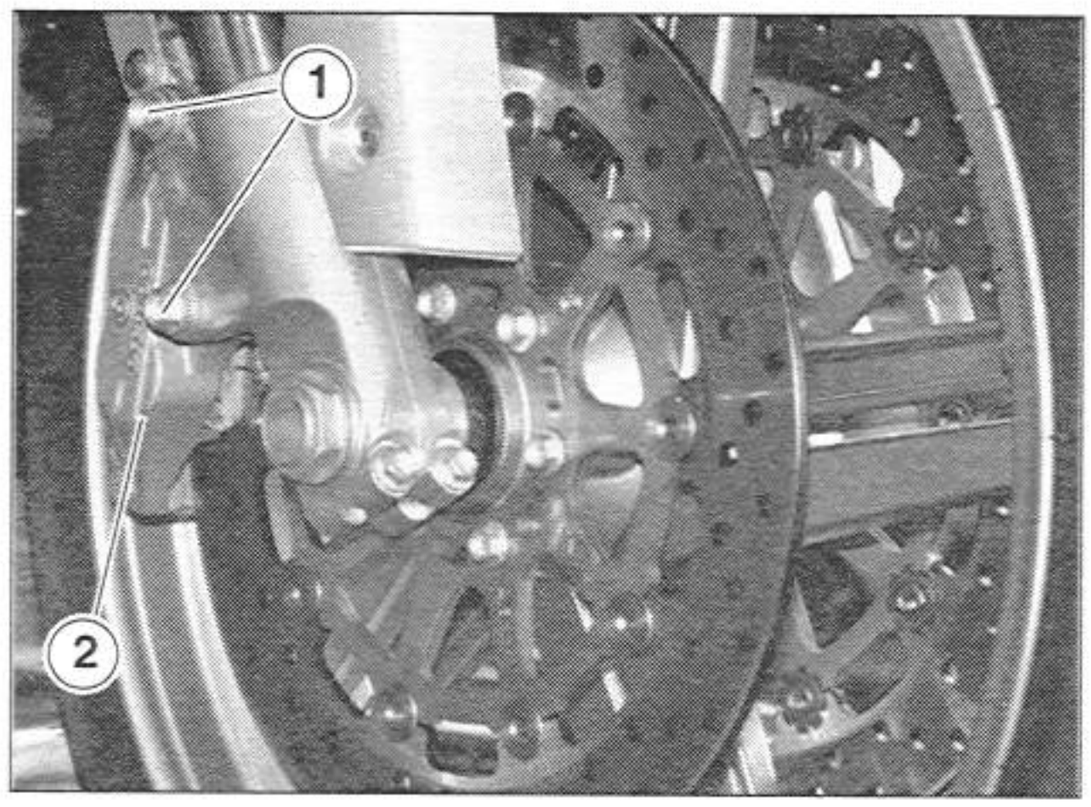

Tightening torque for screws (1): 36 ftlb (50 Nm).

- Remove the front panel, see 7.1.32 (REMOVING THE FRONT FAIRING LOWER LOCKUP).
- Loosen the screw (3) fastening the fork head (4) to the upper fork tube (5).

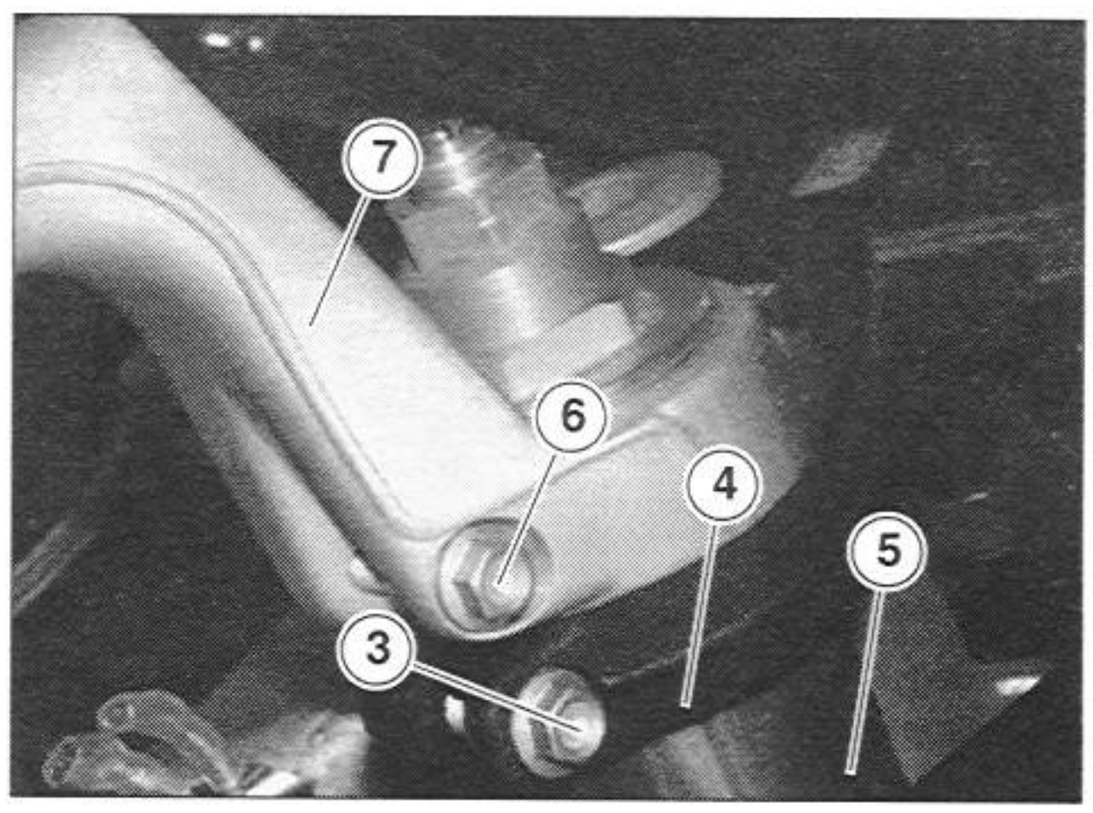

Tightening torque for screw (3): 18 ftlb (25 Nm).

- Loosen the screw (6) fastening the handlebar (7) to the upper fork tube (5).

Tightening torque for screw (6):21.7 ftlb(30 Nm).

- Loosen the two screws (8) fastening the triple clamp (9) to the upper fork tube (5).

Tightening torque for screws (8): 18 ftlb (25 Nm).

- Remove the lower fork tube (10) and upper fork tube (5) as a unit from the fork head (4) and triple clamp (9), raising the lift platform.

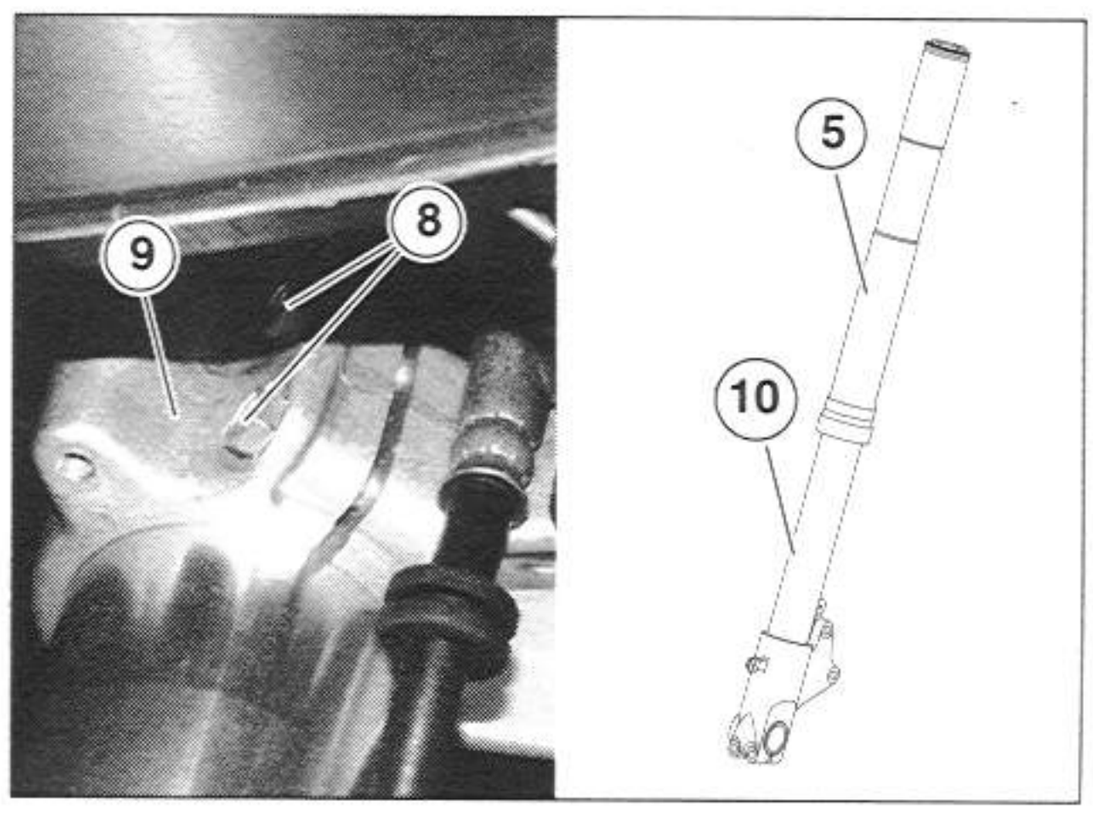

NOTE Where necessary, remove the other lower fork tube/upper fork tube unit.

7.8.3 DISASSEMBLING THE LOWER FORK TUBE/ UPPER FORK TUBE UNIT

Carefully read 1.3.9 (PRECAUTIONS AND GENERAL INFORMATION), 1.4.2 (LUBRICANTS) and 2.29 (INSPECTING THE FRONT SUSPENSION).

NOTE The right and left upper/lower fork tube units have the same internal components.
The following steps refer to a single upper/lower fork tube unit, but are applicable to both.
The operations marked with the symbol "●" also refer to changing the fork oil.

- ◆●Remove the upper/lower fork tube unit, 7.8.2 (REMOVING THE FORK TUBES).
- ◆●Thoroughly clean the entire upper/lower fork tube unit.

NOTE Before proceeding with the operations that follow, make sure you have on hand the special tools OPT (A), (B), (C) and a container with a capacity greater than 550 cm³.

⚠ WARNING

Proceed very carefully with disassembly operations.

- ◆●Turn the upper screw adjuster (1) all the way counter-clockwise to reduce the hydraulic damping on extension.
- ◆●Remove the retainer ring (2).
- ◆●Unscrew and remove the spring preload adjuster (3).
- ◆●Remove the spring preload (4) thruster.
- ◆●Place the lower fork tube- upper fork tube unit in a vice using the two halves of the special tool (C).

⚠ WARNING

The upper/lower fork tube unit contains oil; do not turn it upside down or tilt it too far in any direction during disassembly.

- ◆●Loosen the upper fork tube cap (5).
- ◆●Remove the fork tube unit from the vice.
- ◆●Holding the fork tube unit upright, completely unscrew the upper fork tube cap (5).
- ◆●Unscrew and remove the threaded pin (A1) from the tool (A).
- ◆●Place the stationary part of the tool (A) so that the tooth engages the hole on the spring spacer tube (6).
- ◆●Place the threaded pin (A1) in the hole on the stationary part of the tool (A), making sure that when it is fully inserted it engages the hole in the spring spacer tube (6).

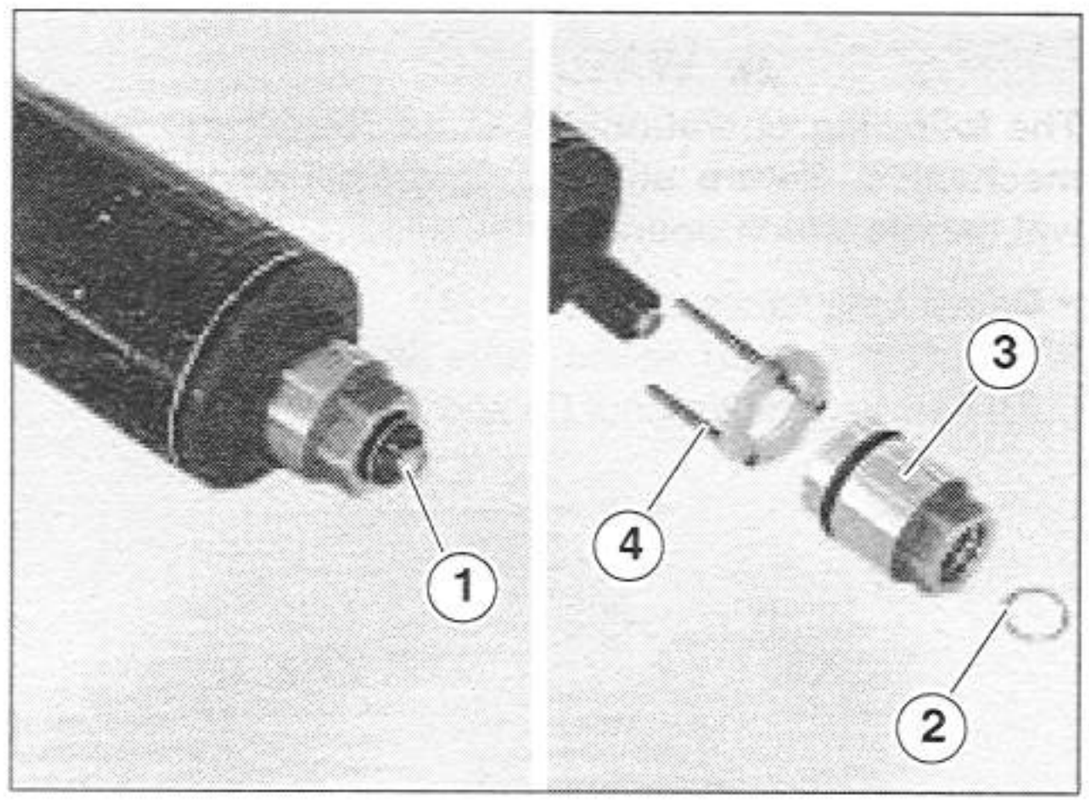

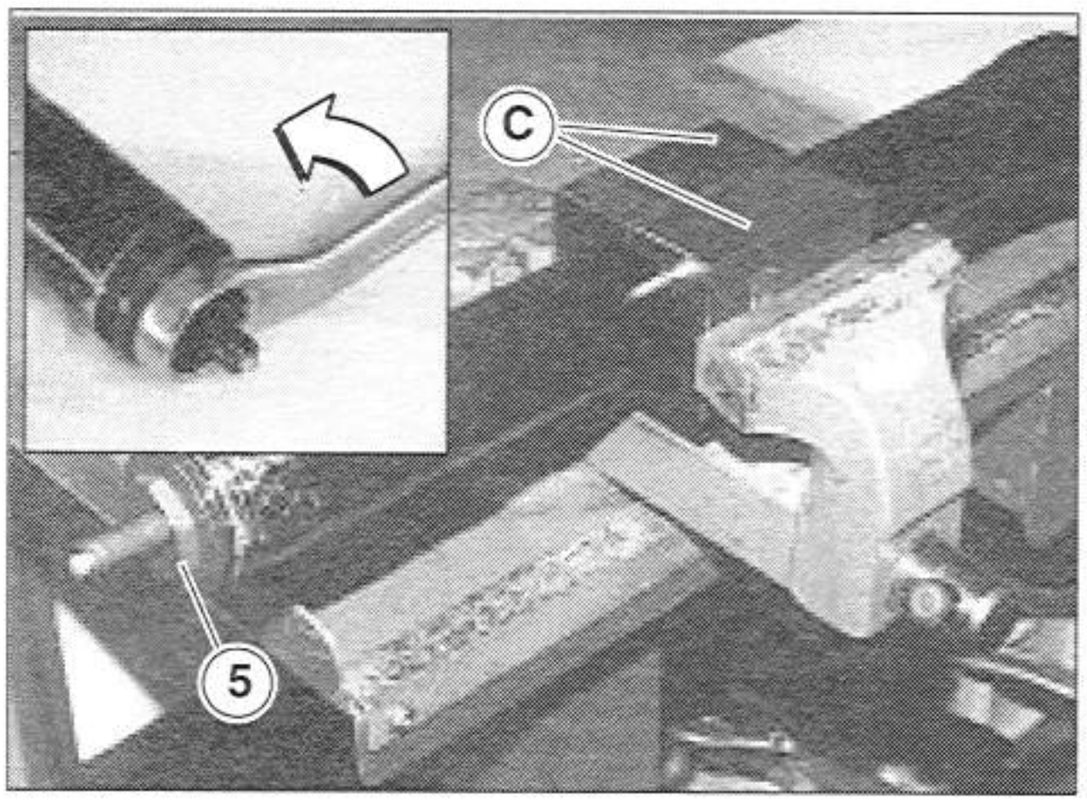

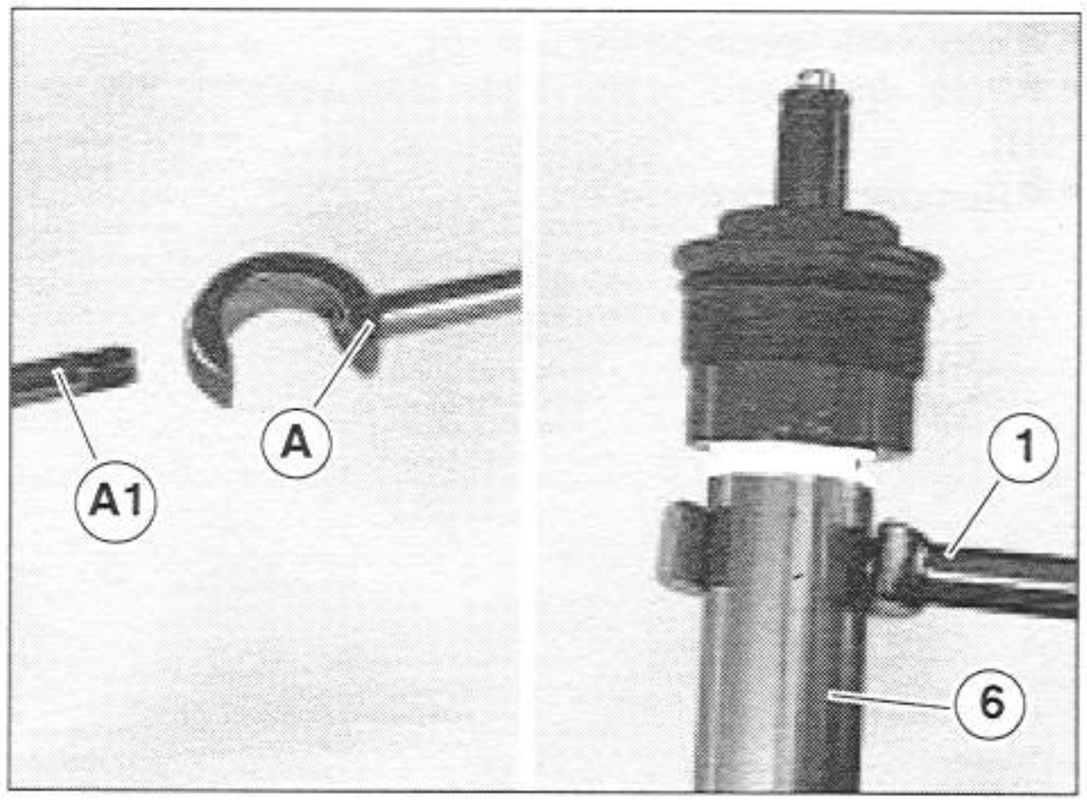

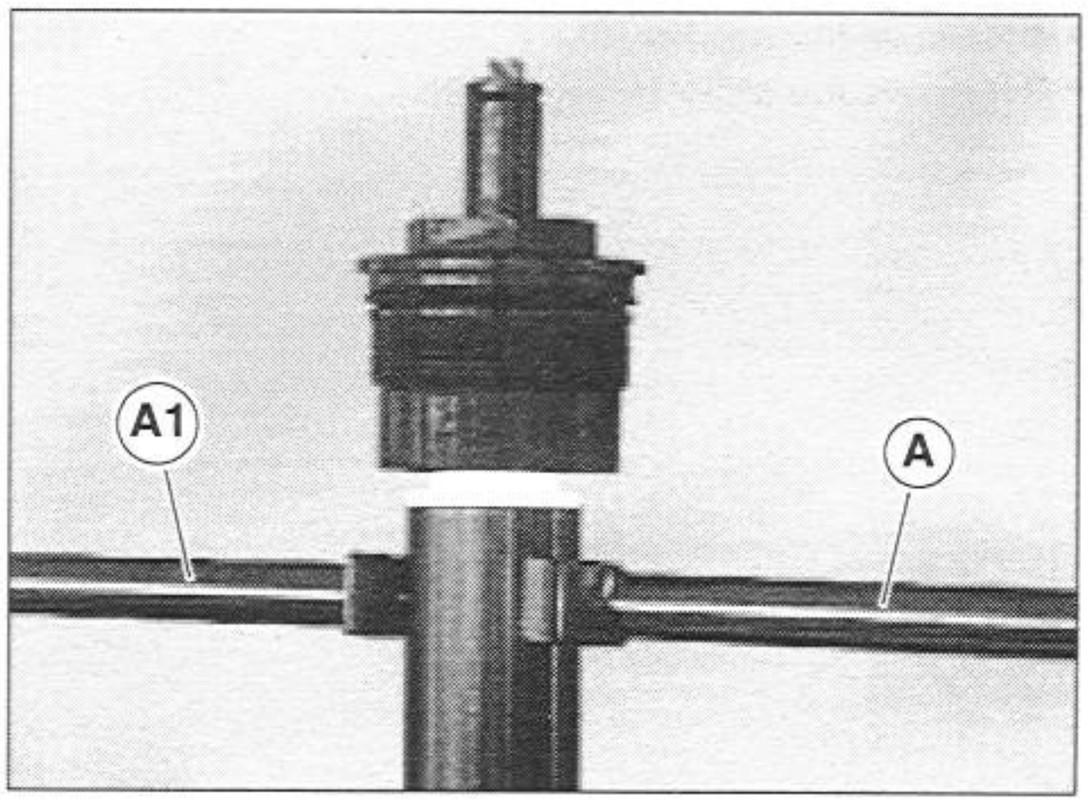

⚠ WARNING

The following operations must be carried out by two mechanics. Before starting, agree which mechanic will handle which operations.

- ●Rest both hands on the tool (A).
- ●Push downward, at the same time inserting the tool (B) between the lock nut (7) and the washer (8).

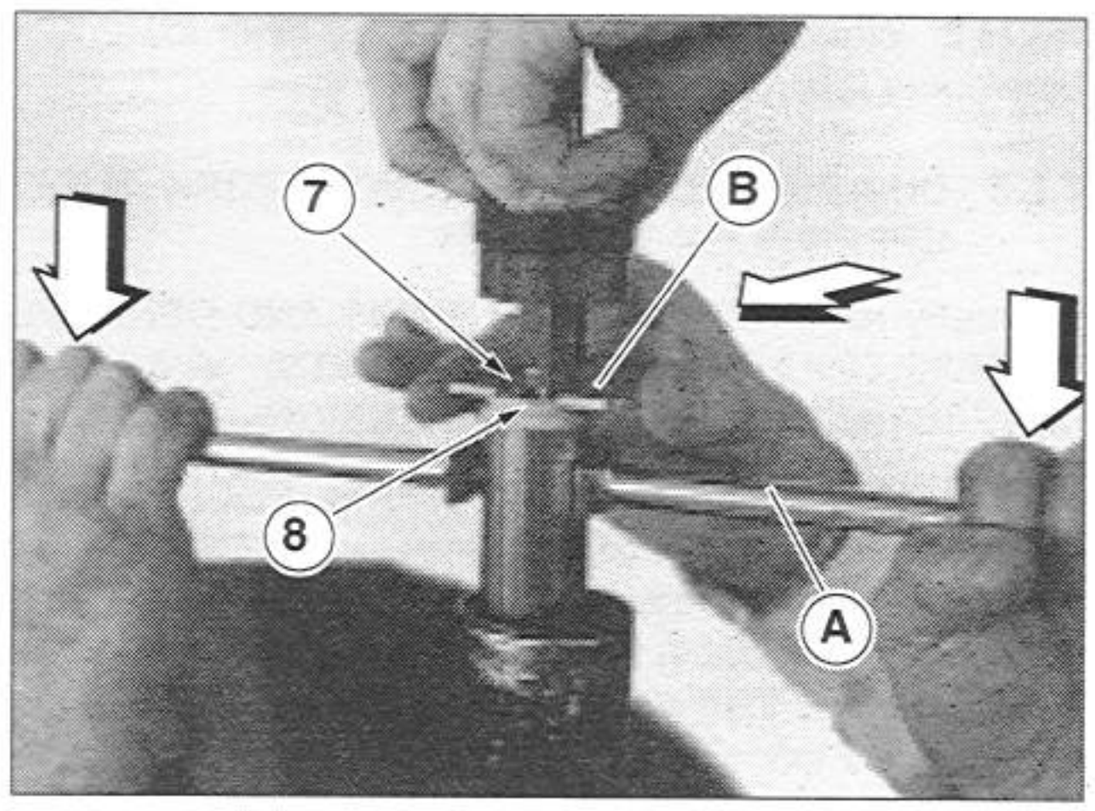

- ●While holding the damper rod (9), unscrew the upper fork tube cap (5) using the appropriate wrench.

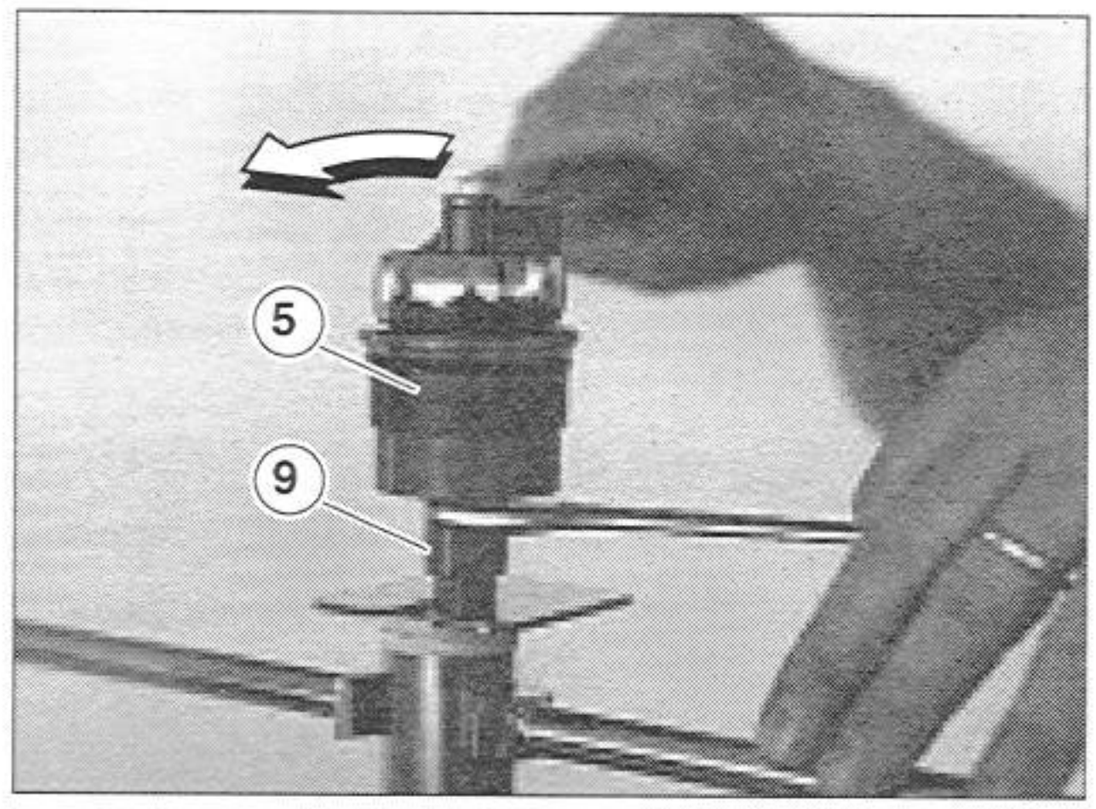

- ●Rest both hands on the tool (A).
- ●Push downward, at the same time removing the tool (B).
- ●Remove the tools (A).

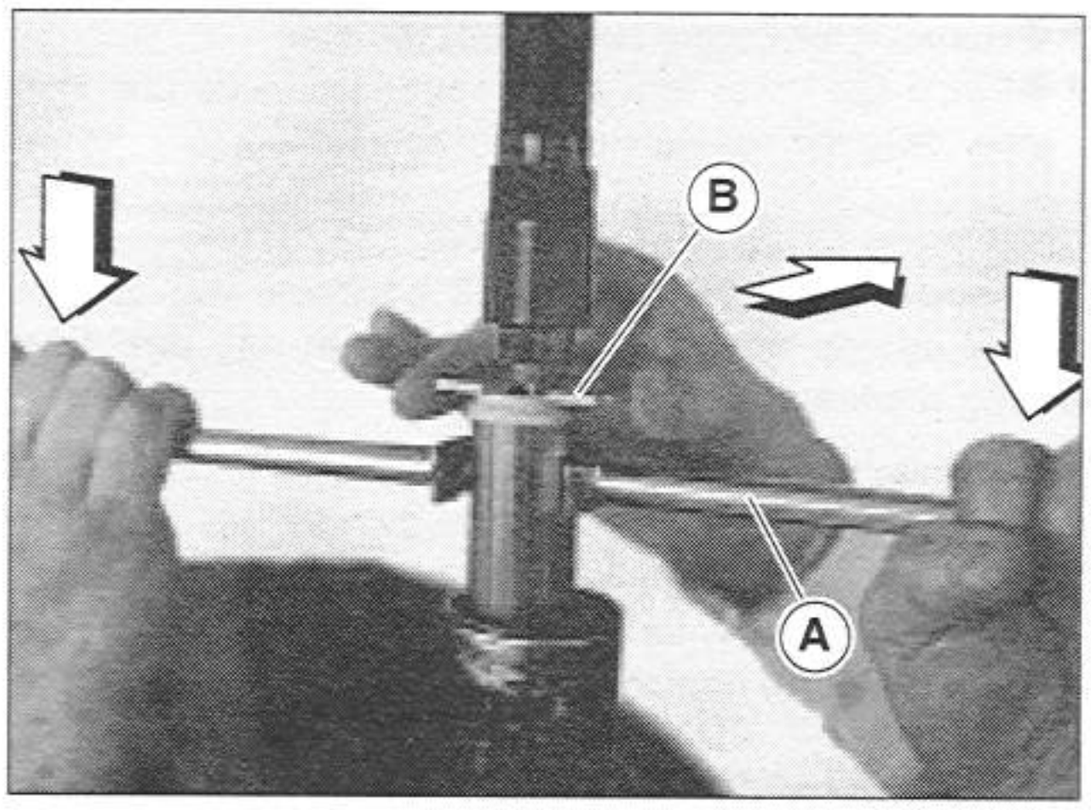

- ●Remove the washer (8).
- ●Remove the slider bushing (10).

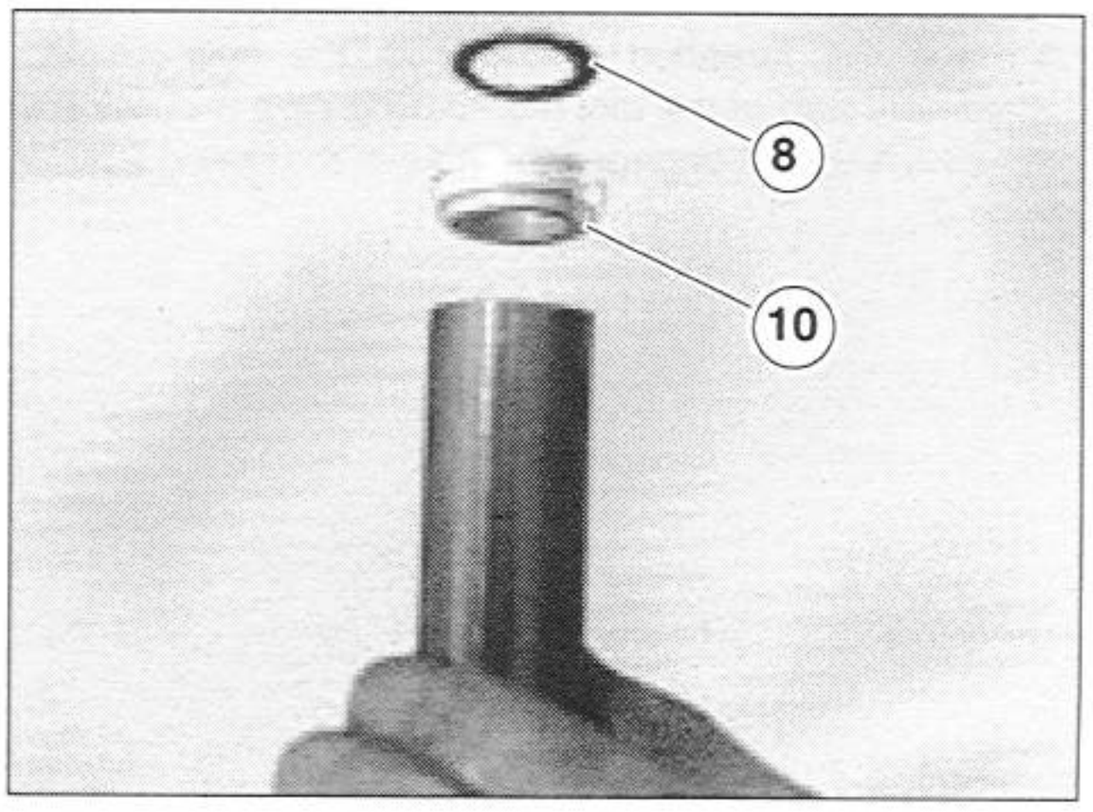

NOTE Before removing them completely, hold the spring spacer tube (6) and the spring (11) above the fork tube, so that some of the oil remaining on these components drains down inside the fork tube.

◆●Remove the spring spacer tube (6) complete with spring seat and slider ring.
◆●Slip off and remove the spring (11).

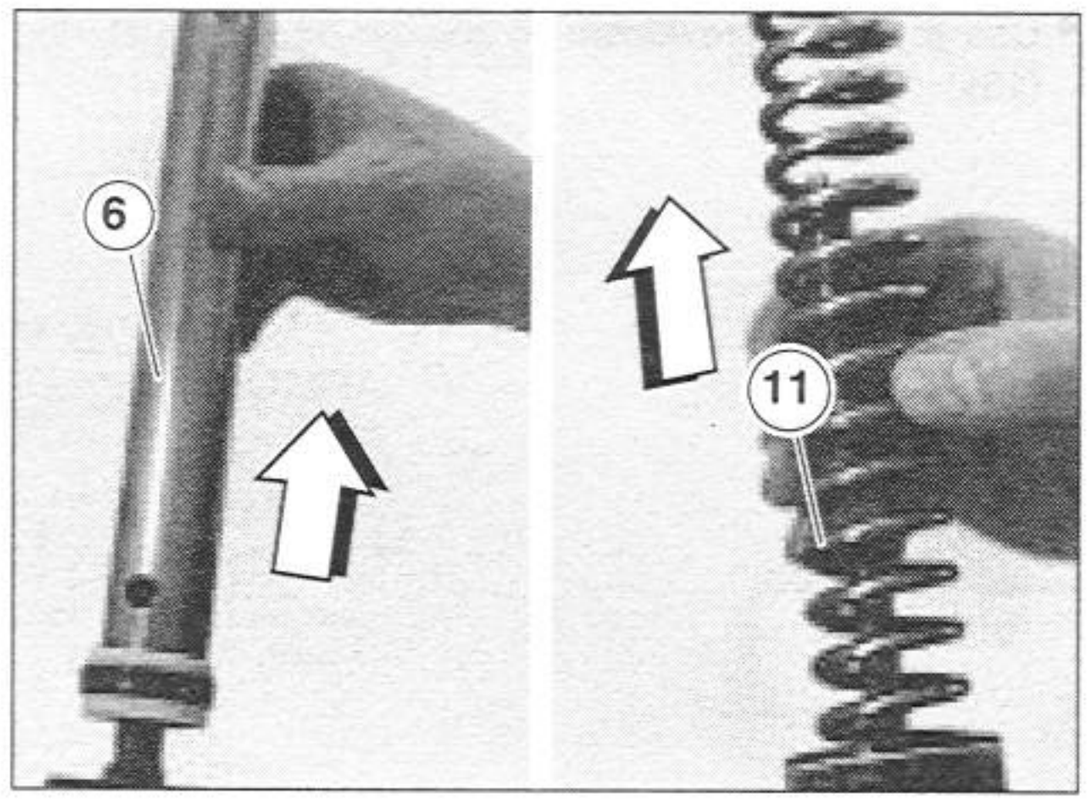

◆●Turn over the lower fork tube together with the upper fork tube, and empty the oil into the container (12).

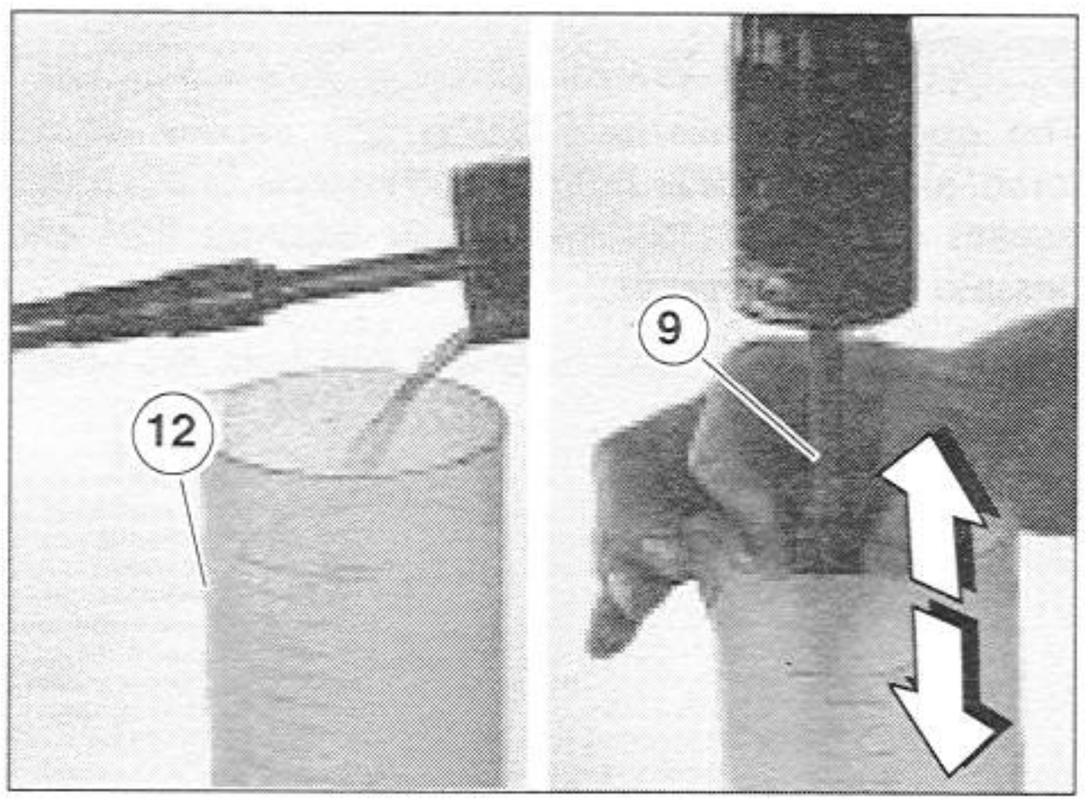

NOTE "●" To make sure to get all of the oil out, pump the damper rod (9) slowly up and down (eight to ten times) in the upper fork tube.
You will know when you are done because the lower tube will slide smoothly inside the upper tube.

◆ If they have not already come out while emptying the oil, remove the following in the order given:
- lower spring seat (13);
- lower collar (14).

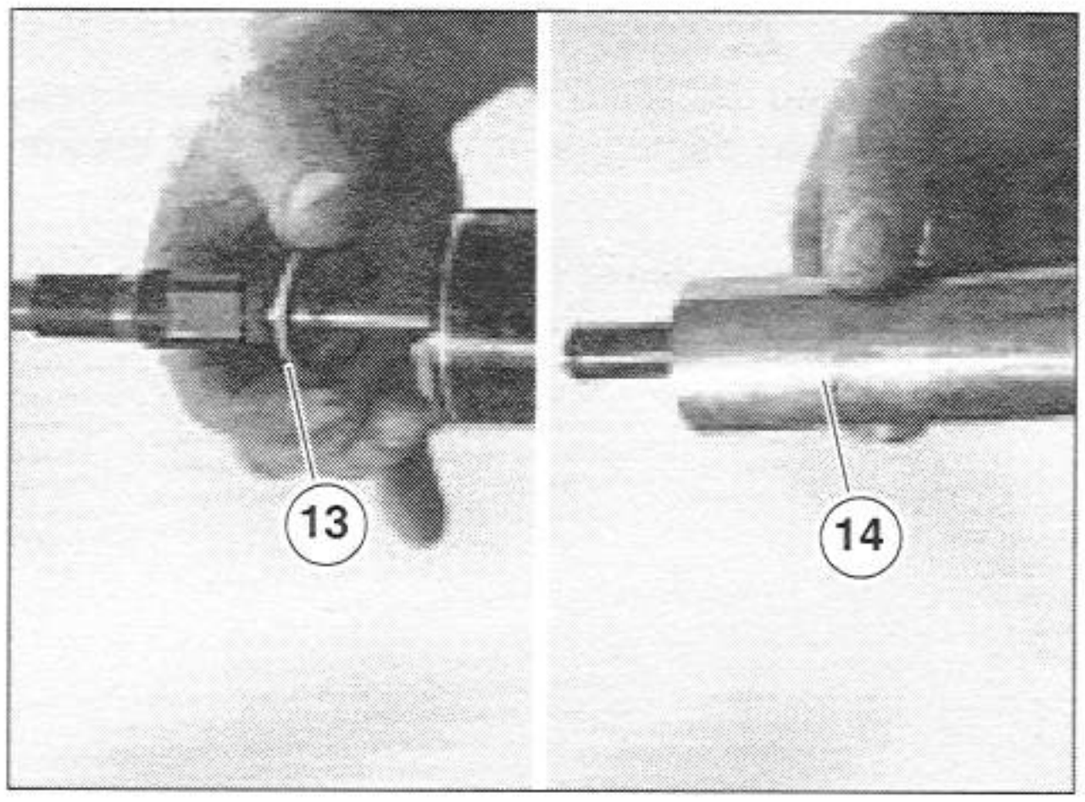

◆ Use a blade screwdriver to gently pry all around the edge of the dust seal (15), to remove it from the upper fork tube.

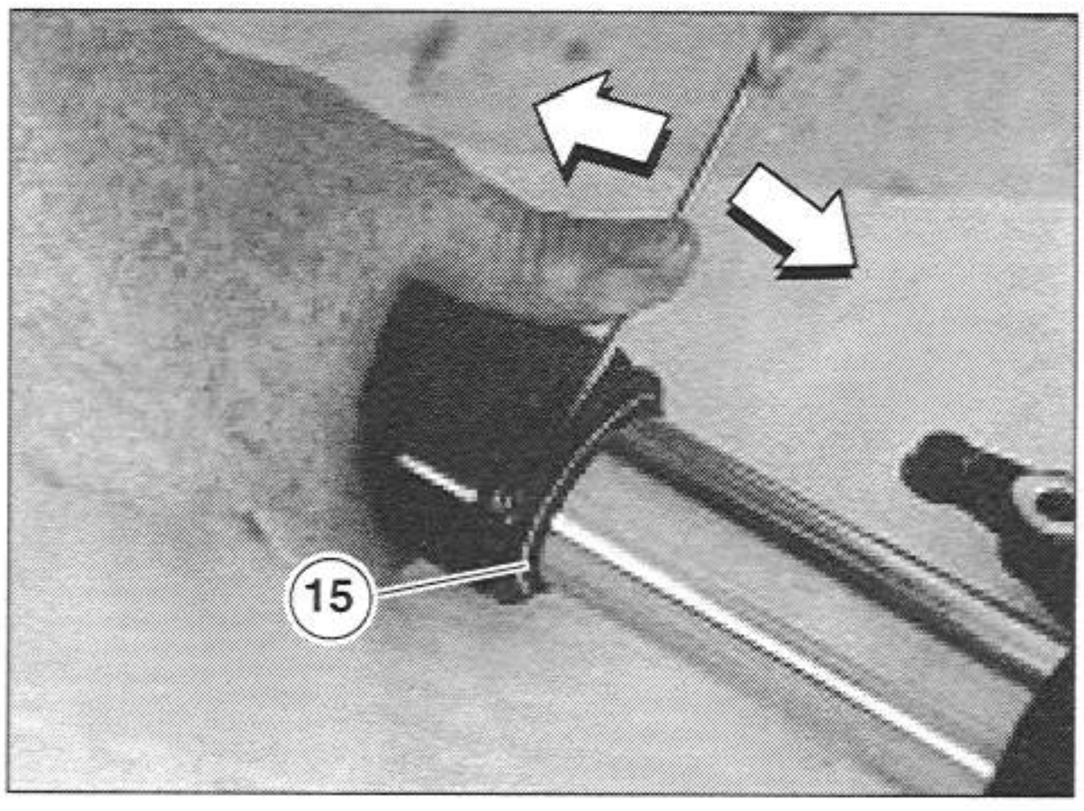

- Use a blade screwdriver to remove the retainer ring (16).

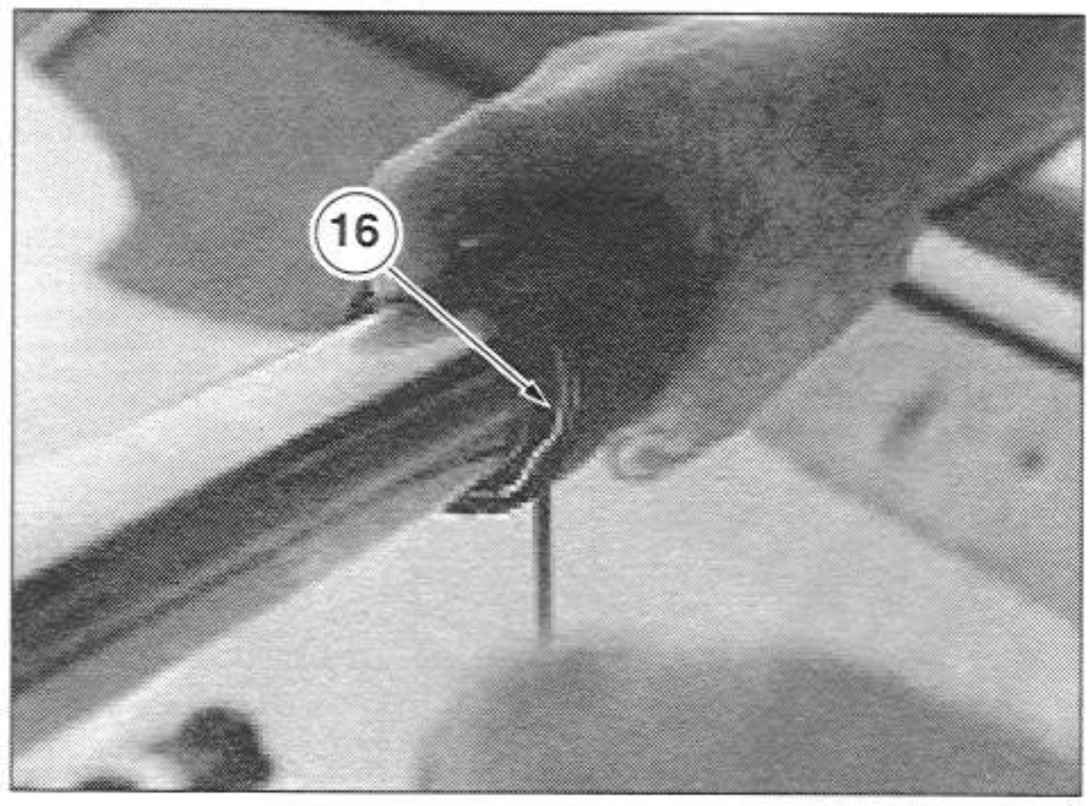

⚠ WARNING

The operation described below will require some force, since the slider bushing (17) needs to push the gasket (18), ring (19), and guide bushing (20) off, despite their resistance.

- Remove the lower fork tube unit (21) from the upper fork tube (22).

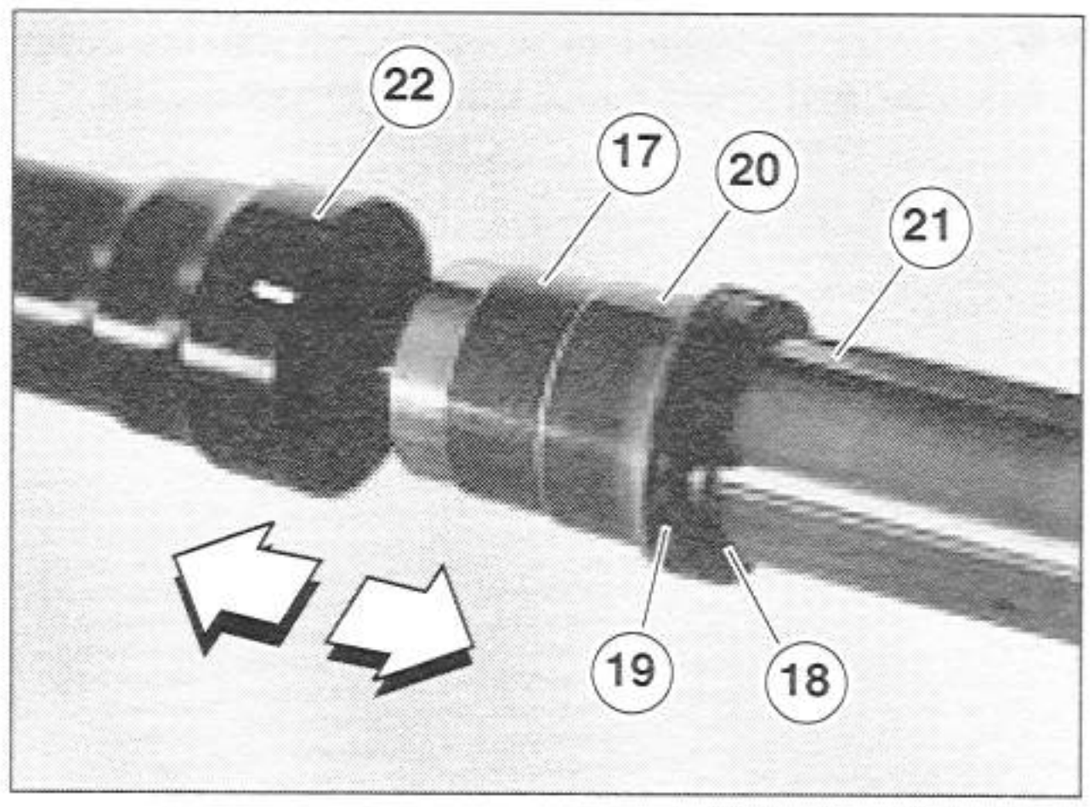

⚠ WARNING

When removing the slider bushing (17), be extremely careful to avoid damaging it (especially the sliding surface).

- Use a blade screwdriver to slightly widen the bushing (17) and remove it from the lower fork tube (21).

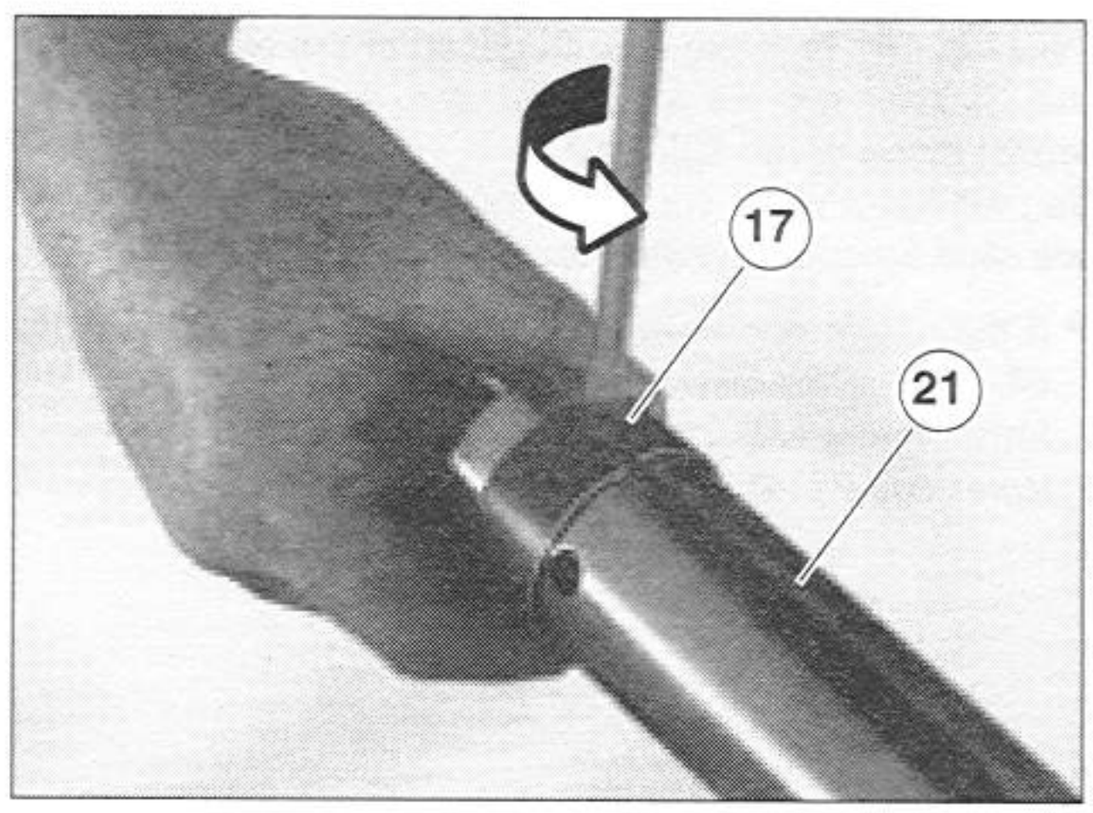

- Remove the following components from the tube (21) in the given order:
- guide bushing (20);
- ring (19);
- gasket (18);
- stop ring (16);
- dust seal (15).

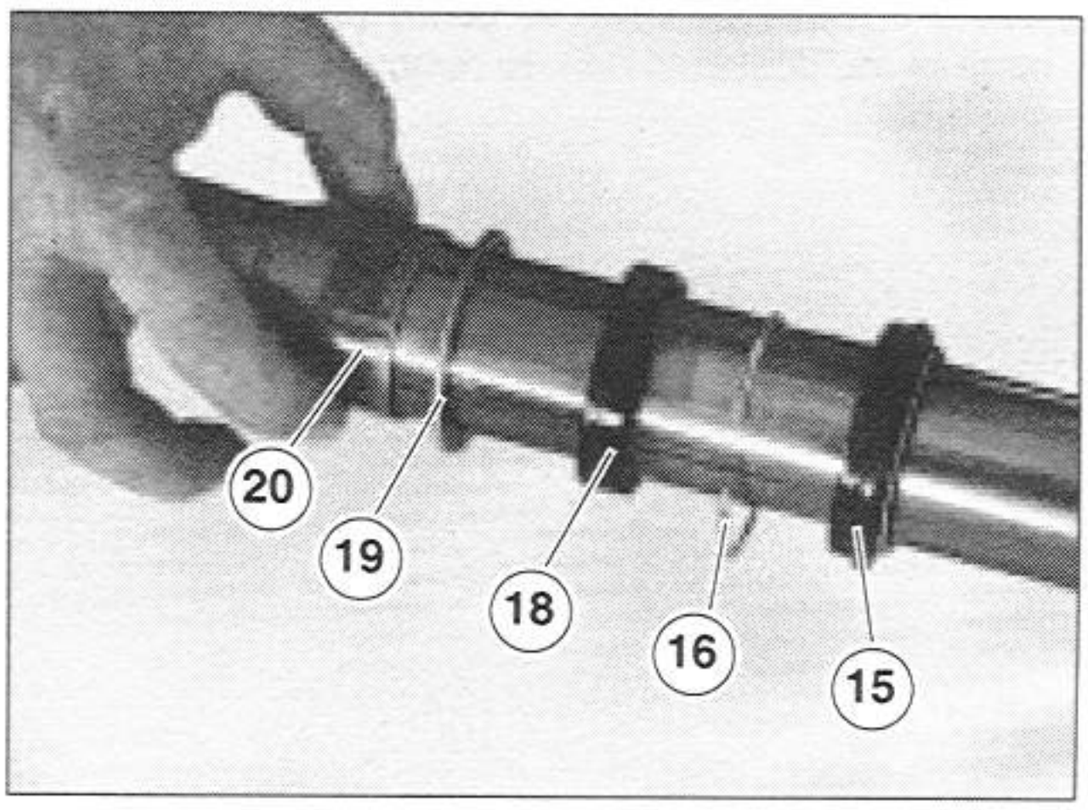

- Place the lower fork tube (21) in a vice, inserting a soft material (aluminum) between the jaws.

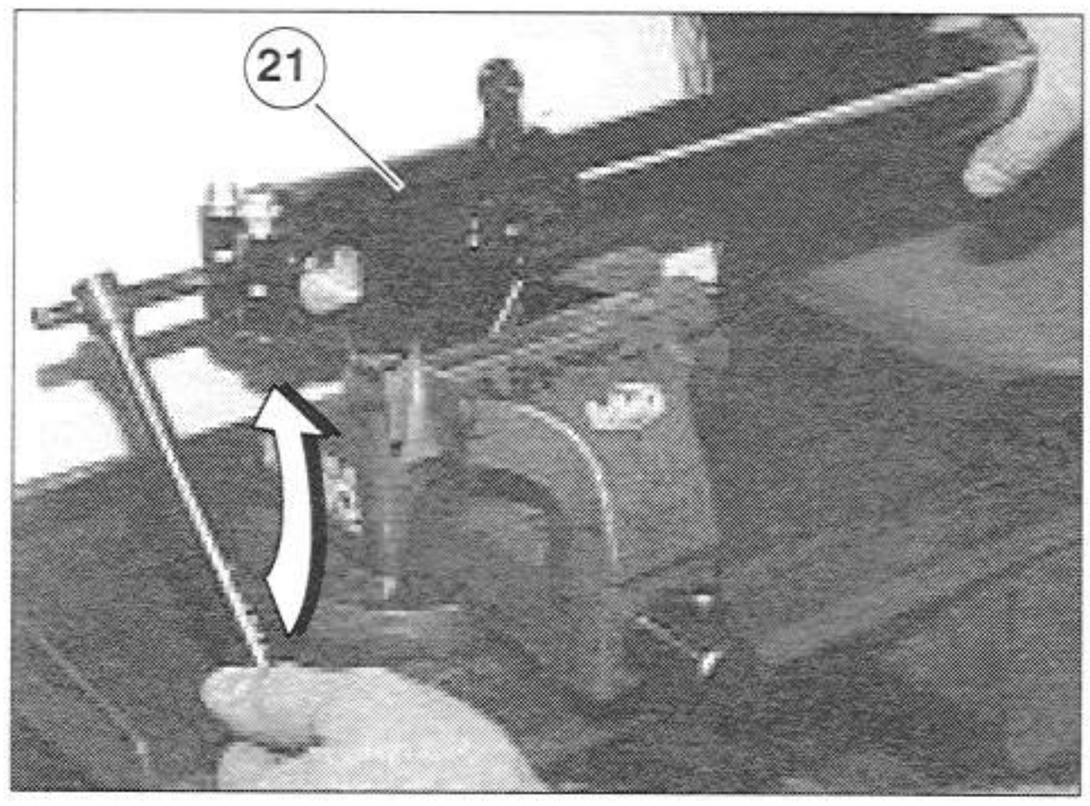

- Unscrew and remove the center screw (23) and retrieve the copper washer (24).

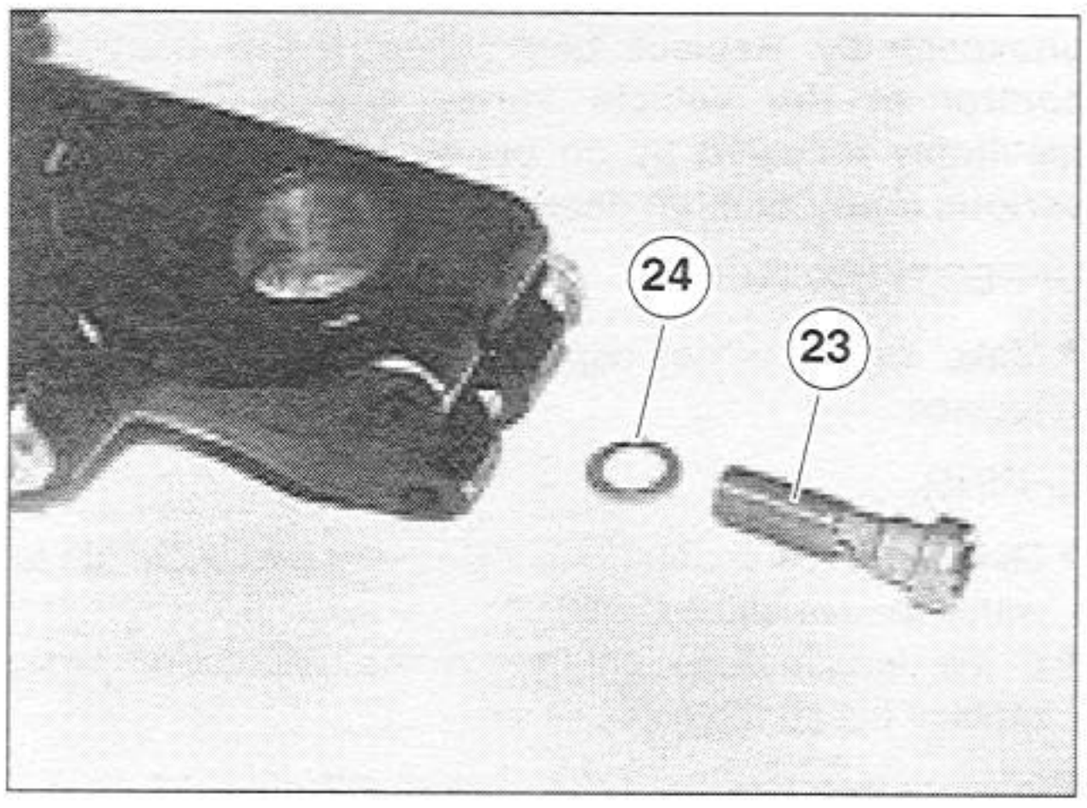

- Remove the complete damper (9) from the lower fork tube (21).

⚠ WARNING

The damper (9) must not be disassembled.

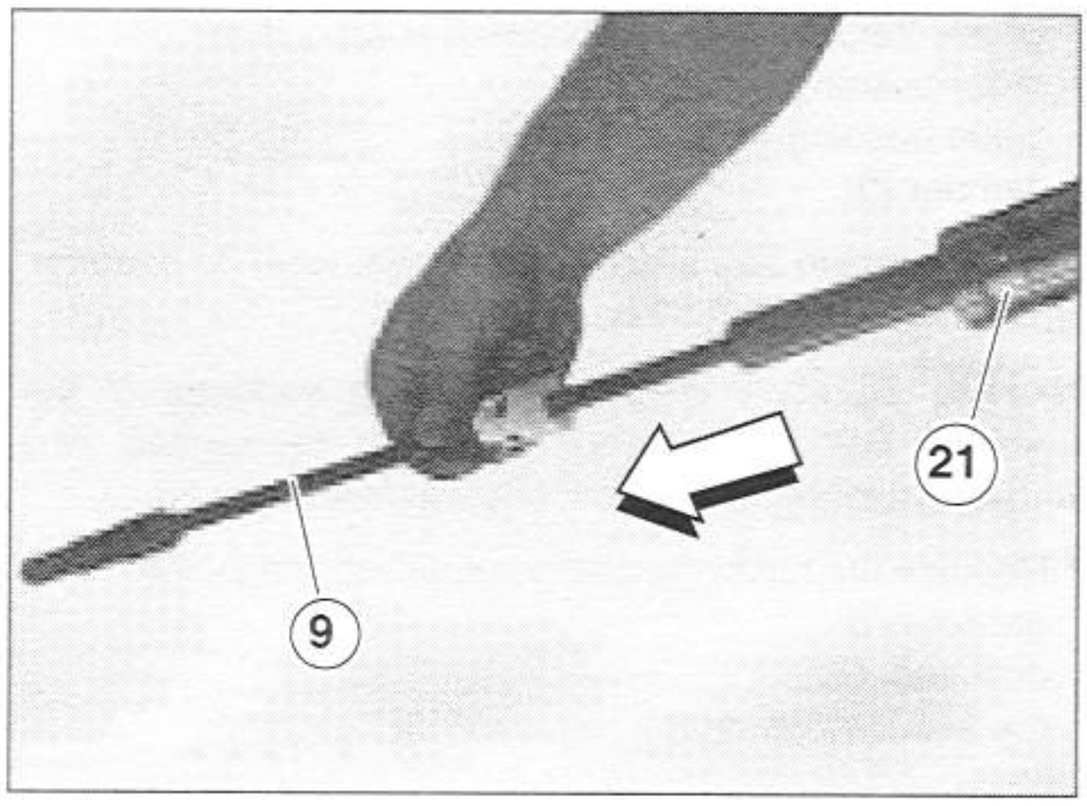

- Remove the centering bushing (25).

⚠ WARNING

Wash all components with clean solvent.

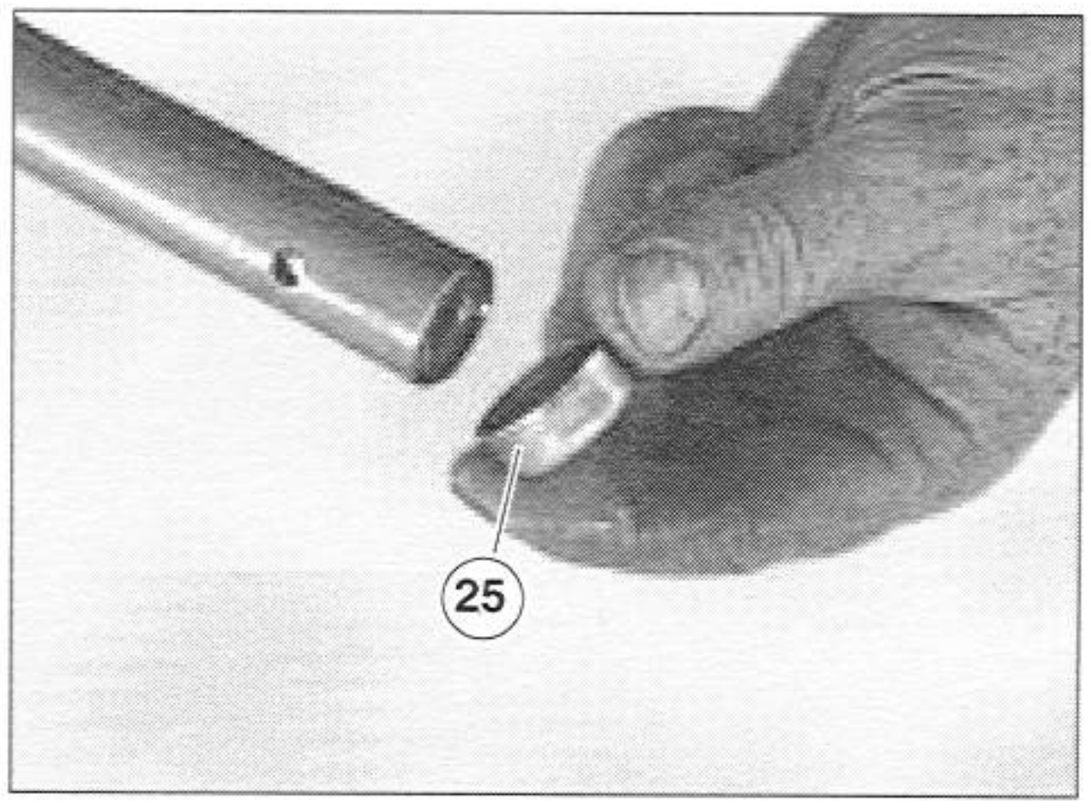

7.8.4 CHECKING THE COMPONENTS

LOWER FORK TUBE

- Inspect the sliding surface to make sure it is not scratched or scored.
  Slight scratches may be eliminated by sanding with very fine (1200 grit) wet sandpaper.
  If the scratches are deep, replace the tube (1).
- Use a dial indicator to make sure any bending in the fork tube (1) is less than the acceptable limit.
  If greater than the limit, replace the fork tube.

Bending limit: 0.008 in (0.2 mm).

⚠ DANGER

NEVER try to straighten a bent fork tube. This can weaken the tube, and cause it to fracture unexpectedly. Replace bent tubes. If this happens, control of the vehicle surely will be lost, and inevitably followed by an upset and accident, with serious injury or even death.

UPPER FORK TUBE

- Make sure it is not damaged and/or cracked; if so, replace.

SPRING

- Make sure the spring (2) is intact, and that its length is within the prescribed limit.
- If the length does not match the prescribed limit, replace the spring (2).

Minimum free length of the spring: 9.76 in (284 mm)

- Check the status of the following components:
- slider bushing (3);
- guide bushing (4);
- damper (5).

Should you find any signs of excessive wear or damage, replace the component in question.

NOTE Carefully clean the wearing surfaces of the bushings, being careful not to scratch the surface. Any embedded foreign matter must be gently removed.

- Replace the following components with new ones:
- gasket (6);
- dust seal (7);
- the two O-rings on the regulator (8).

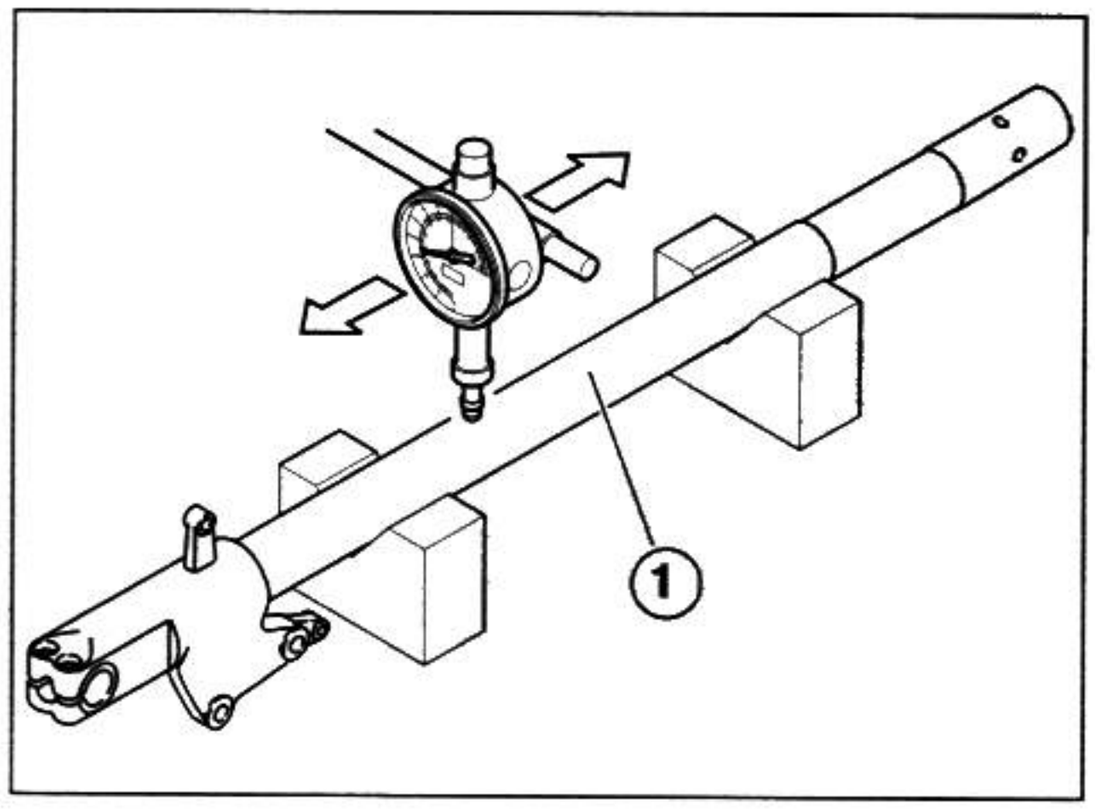

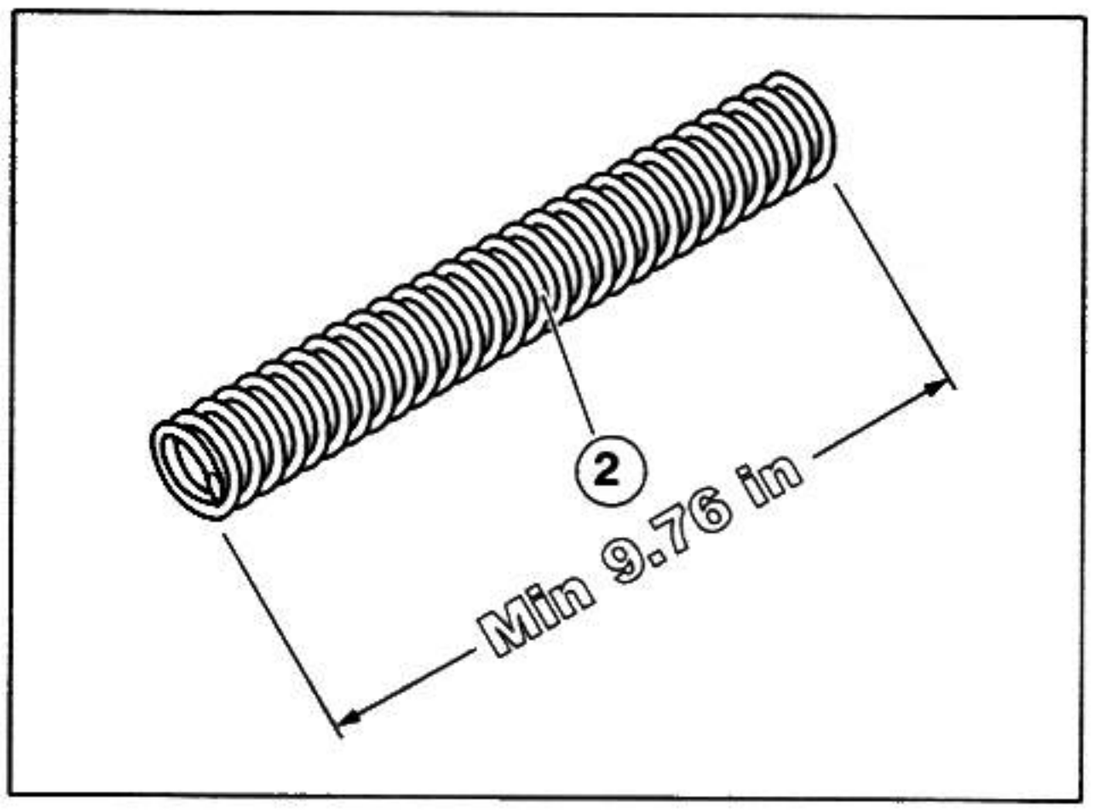

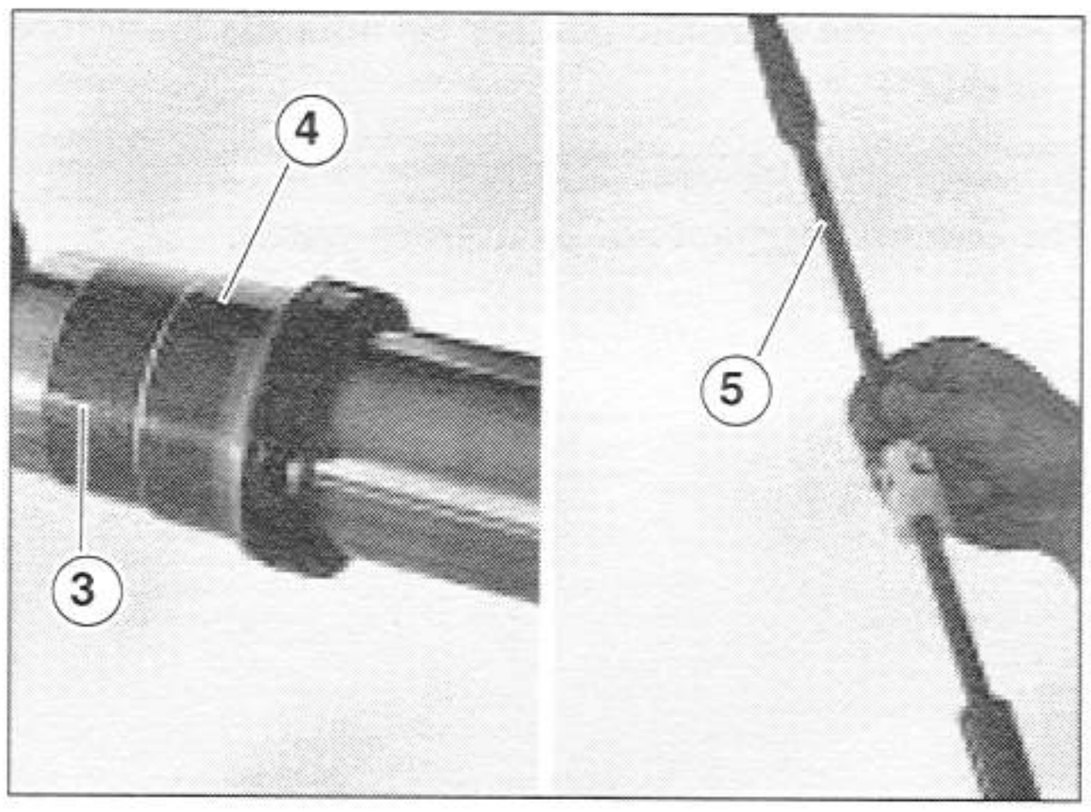

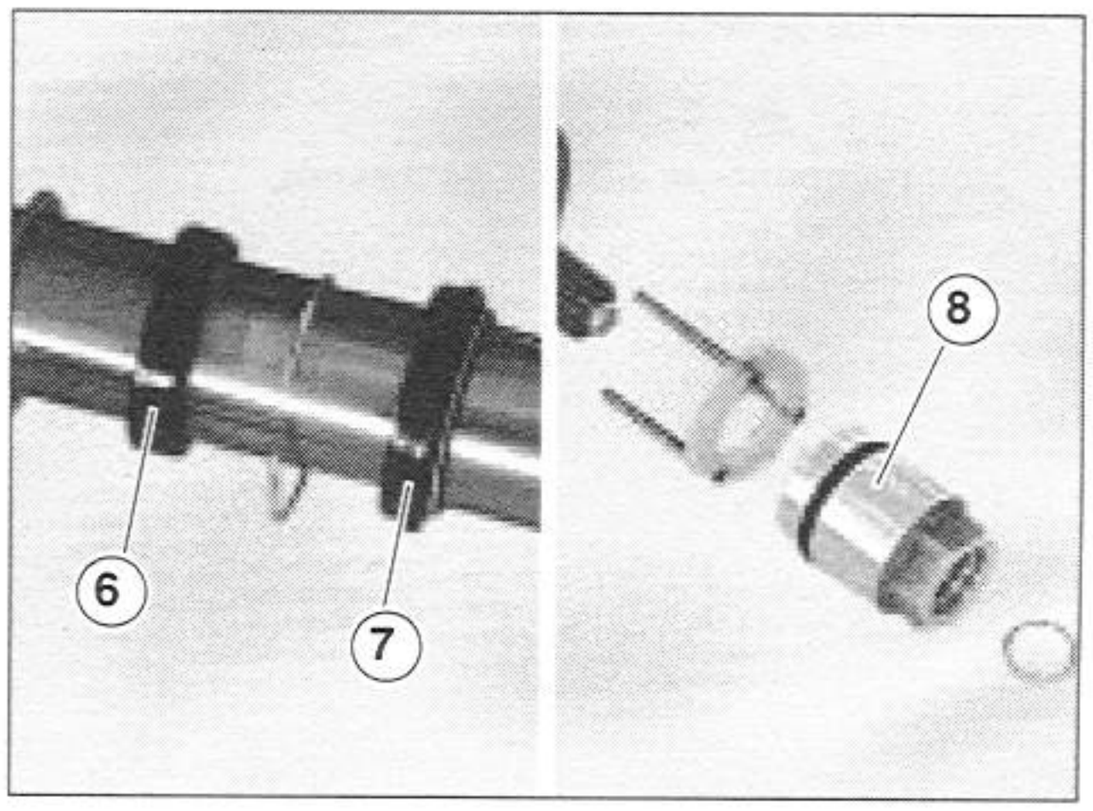

7.8.5 REASSEMBLING THE UPPER/LOWER FORK TUBE UNIT

Carefully read 1.3.9 (PRECAUTIONS AND GENERAL INFORMATION), 1.4.2 (LUBRICANTS) and 2.29 (INSPECTING THE FRONT SUSPENSION).

NOTE The operations marked with the symbol "●" also describe the procedure for changing the fork oil.

⚠ WARNING

During reassembly, be extremely careful to make sure that the sliding surfaces are in perfect condition (there must be no signs of wear, scratches, etc.); otherwise replace the component.
Be extremely careful to prevent any foreign matter from entering the tubes.
Do not re-use oil.
Always replace the gaskets when you are done.
Proceed very carefully with reassembly operations.

NOTE Before proceeding with the operations that follow, make sure you have on hand the special tools OPT (A), (B), (C), and (D). Before re-mounting the gaskets and bushings, lubricate them with a thin coating of fork oil, see 1.12 (LUBRICANT CHART).

- Place the lower fork tube (1) in a vice, with its opening facing upwards, inserting a soft material (aluminum) between the jaws.

NOTE Apply grease inside the centering bushing (2), see 1.12 (LUBRICANT CHART).

- Insert the centering bushing (2) on the bottom of the damper rod (3).
- Slide the damper rod (3) into the lower fork tube (1), making sure it rests firmly on the base.
- Place the copper washer (5) on the center screw (4).
- Insert and tighten the center screw (4).

Tightening torque for center screw (4): 25.8 ftlb (35 Nm).

- Remove the lower fork tube (1) from the vice.
- Carefully wrap the upper end of the lower fork tube with a single layer of vinyl electrician's tape, so as to protect the seals as they are installed on the fork tube.

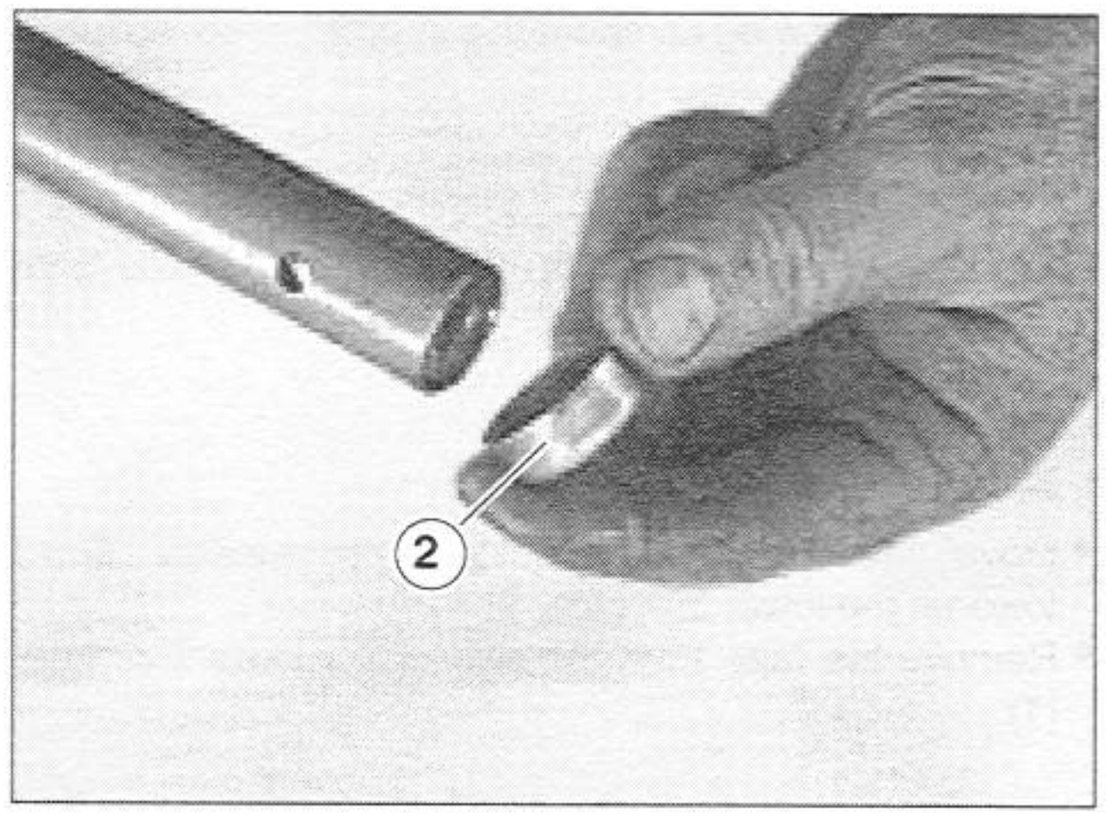

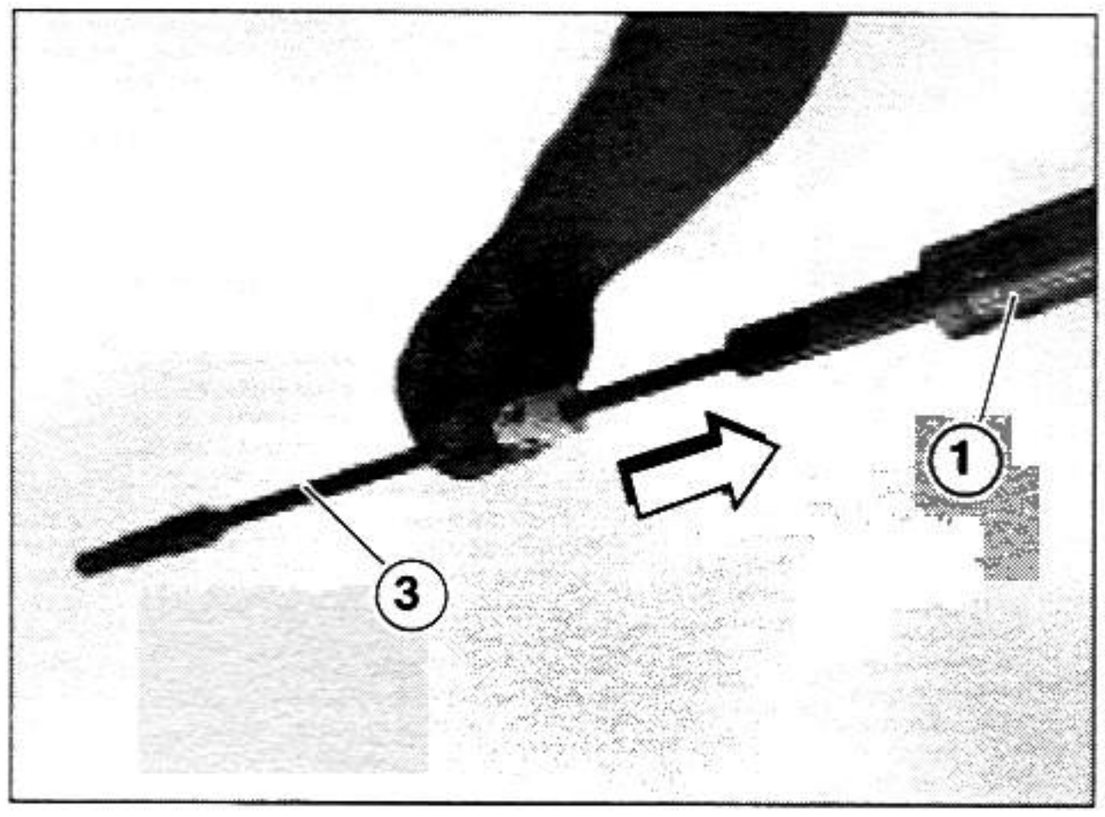

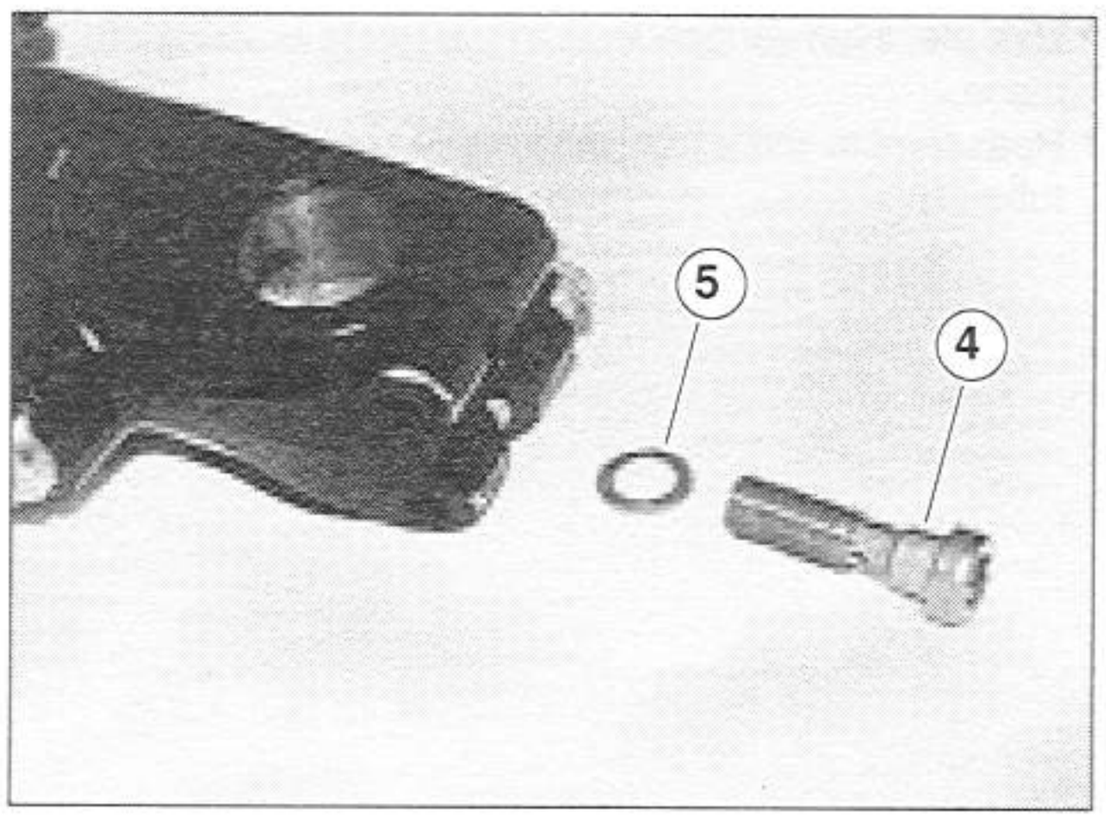

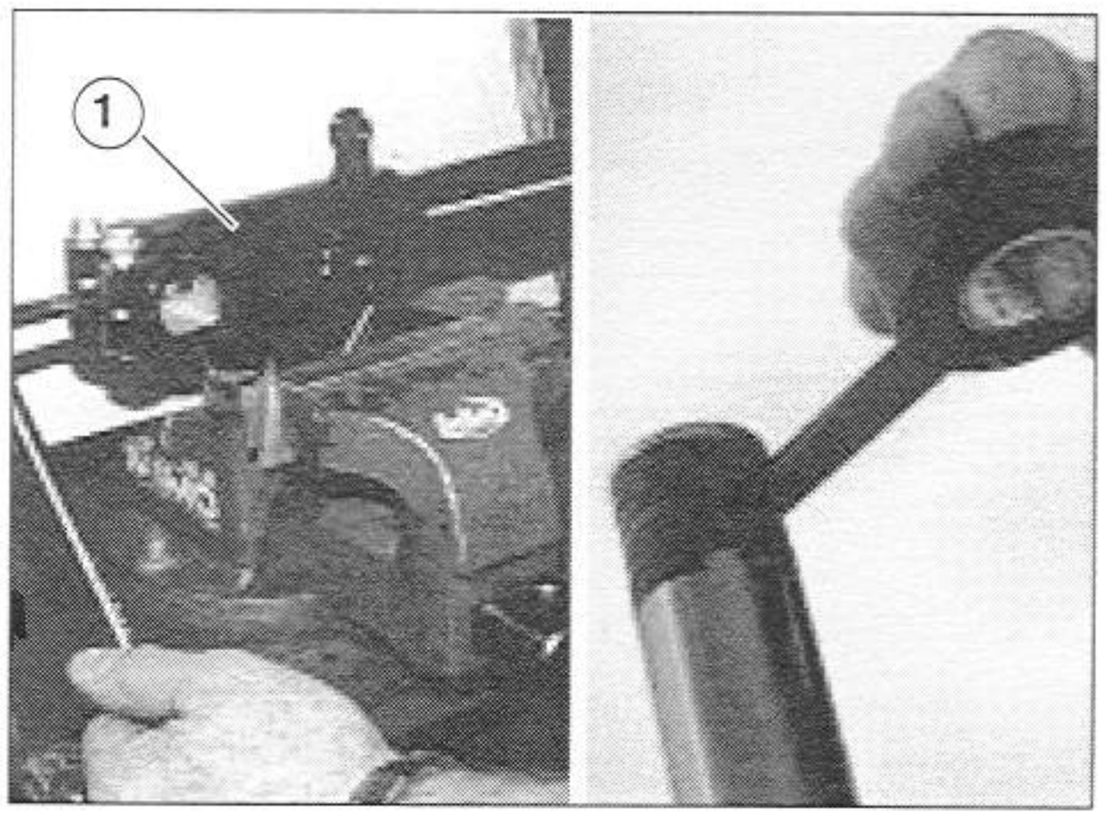

- Slide the following components, in order, onto the lower fork tube (1):
- dust seal (6);
- stop ring (7);

NOTE Slip on the gasket (8), with the labeled side facing the retainer ring (7).

- gasket (8);
- ring (9);
- guide bushing (10).

- Move the aforementioned five components down towards the lower fork tube.
- Remove the tape from the end of the lower fork tube (1).

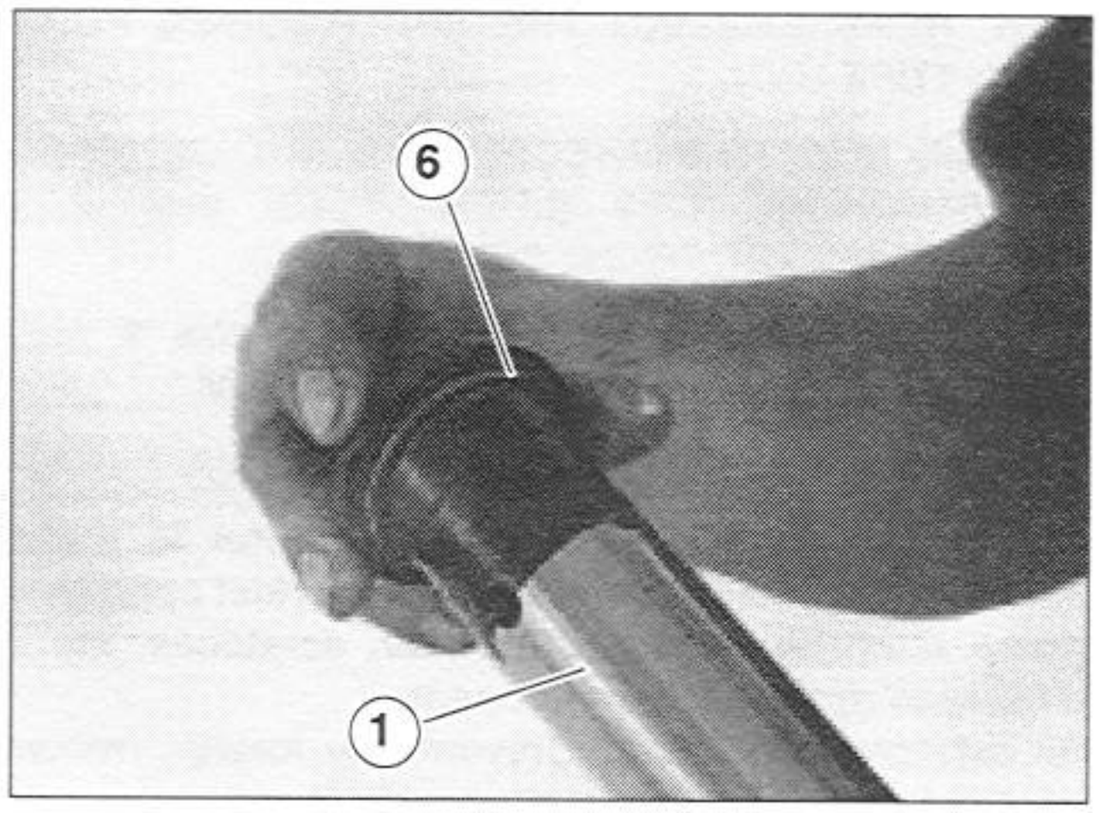

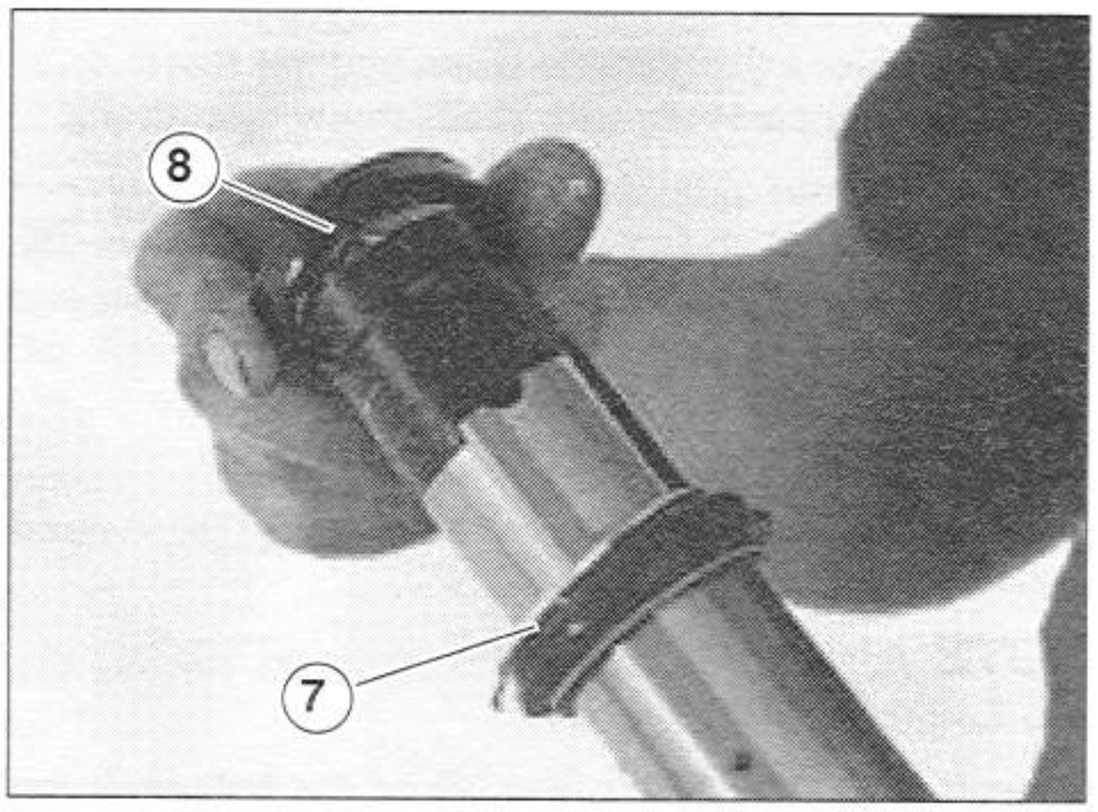

- Use electrician's tape to hold the guide bushing (10) in place.
- Reassemble the slider bushing (11) on the lower fork tube (1).

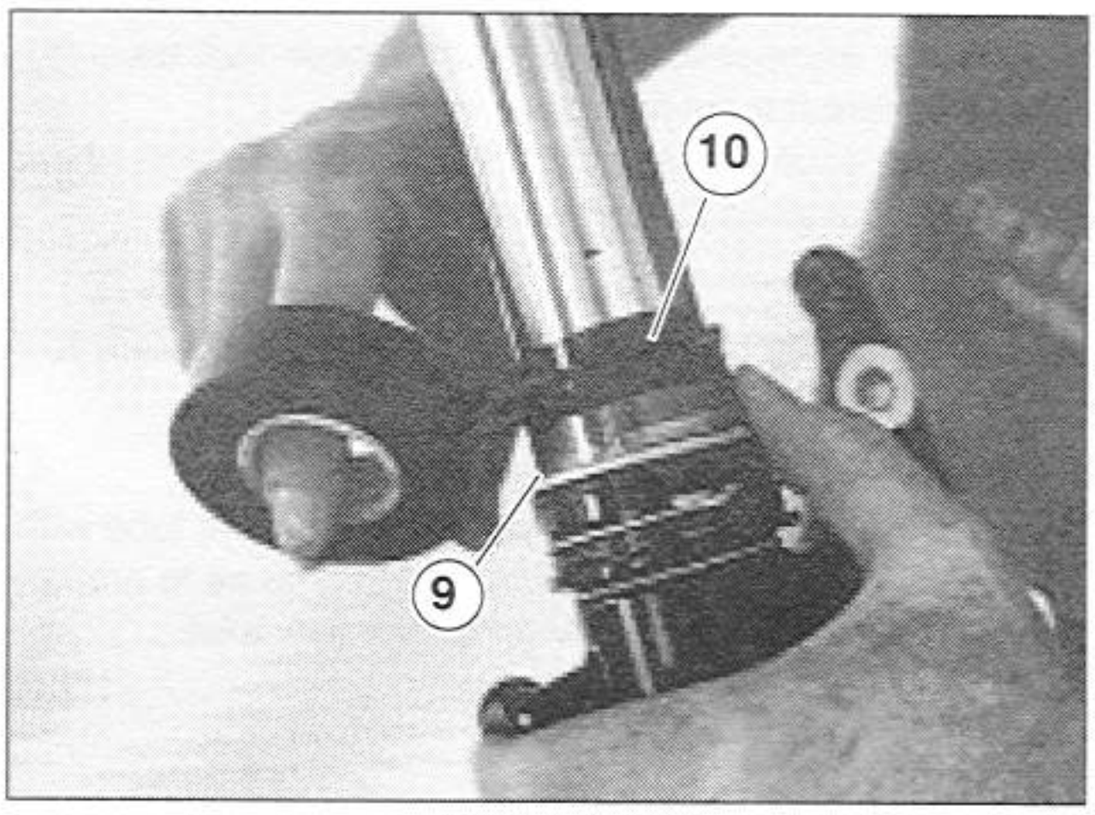

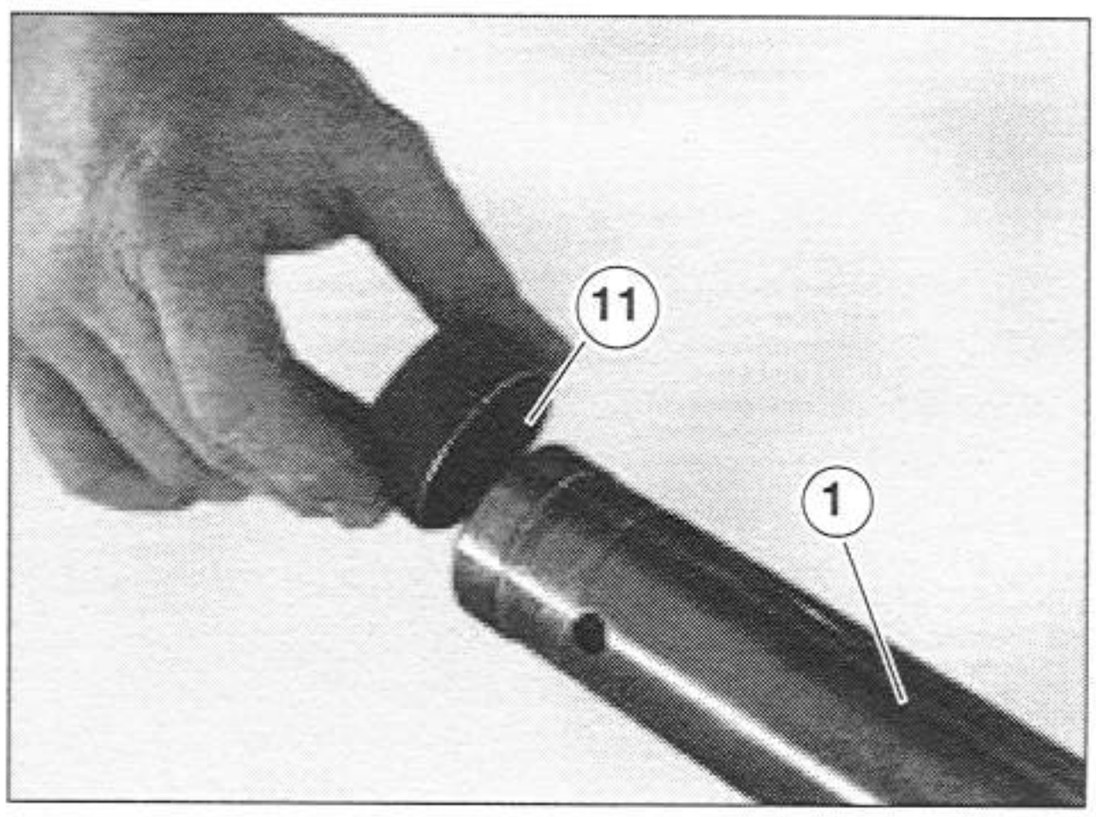

- Insert the lower fork tube (1) into the upper fork tube (12).
- Remove the tape.
- Place the two halves of the tool (D) on the lower fork tube (1), in front of the guide bushing (10).
- Grip the tool (D) and push the guide bushing (10) into position in its seat on the upper fork tube (12).
- Remove the tool (D).

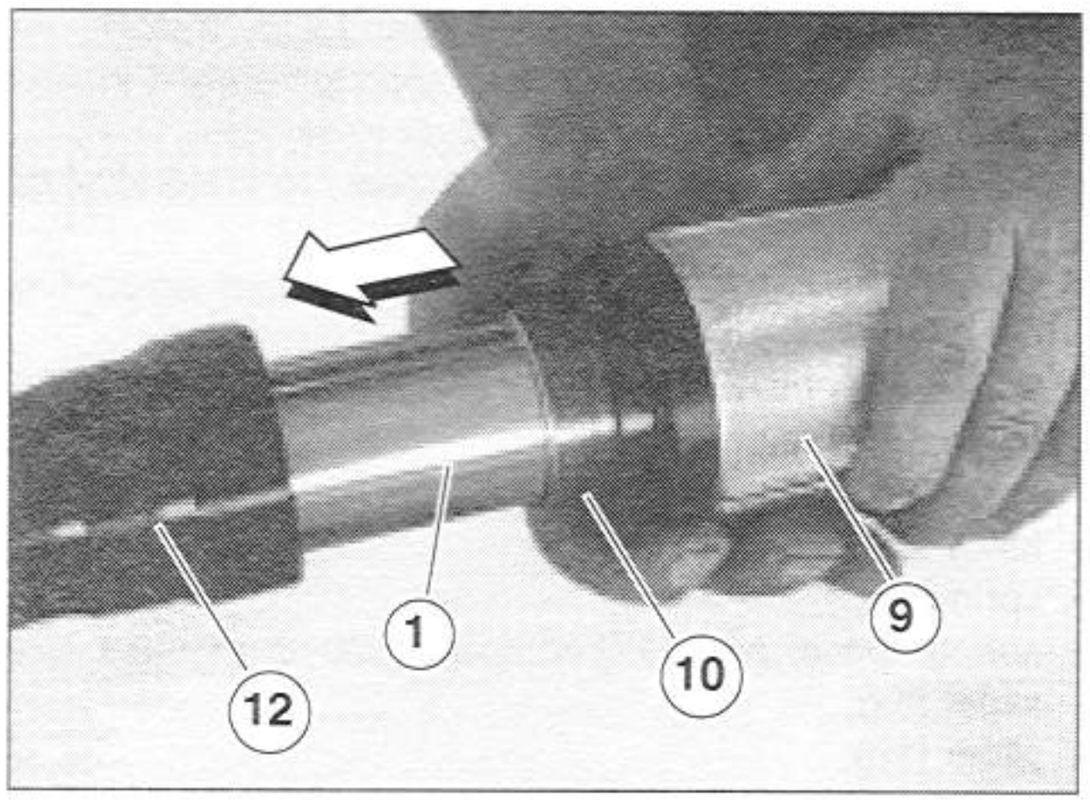

- Install the ring (9), making sure it is in the correct position.
- Place the two halves of the tool (D) on the lower fork tube (1), above the gasket (8).
- Grasping the tool (D), force the gasket (8) into its seat in the upper fork tube (12), making sure that it is driven fully home.
- Remove the tool (D).

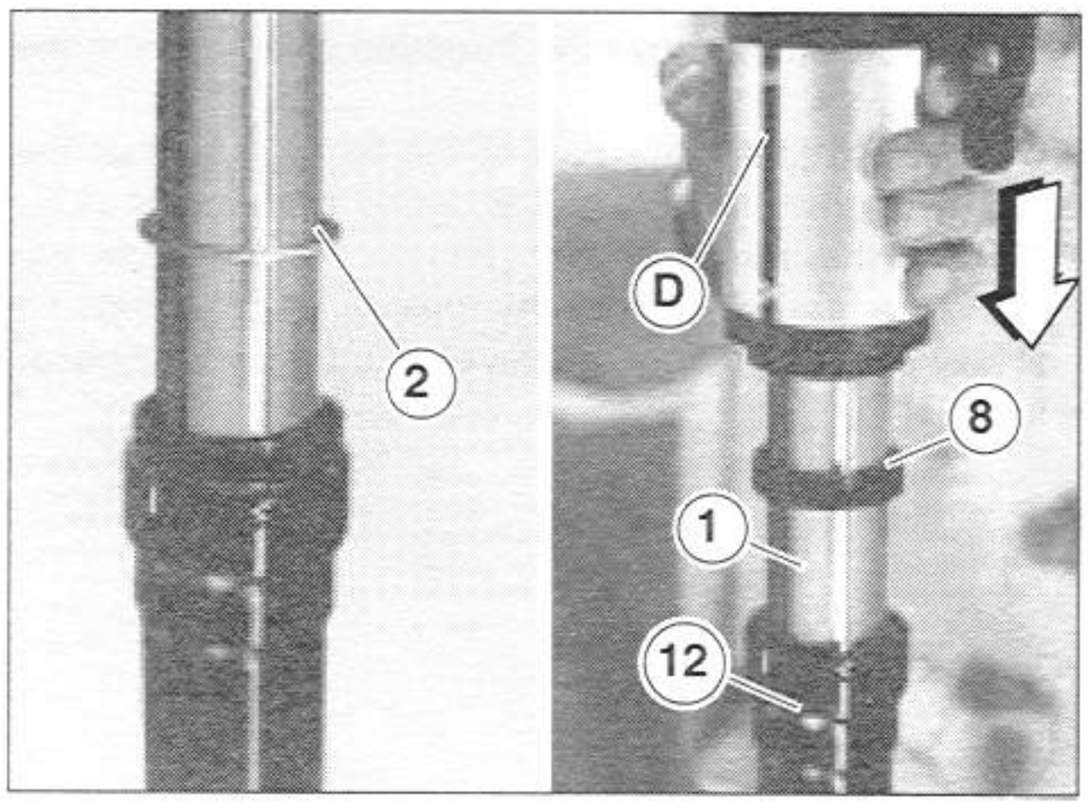

- Install the retainer ring (7) into its appropriate seat on the upper fork tube (12).
- Place the two half-cylinders of the tool (D) on the lower fork tube (1), above the dust seal (6).
- Grasping the tool (D), push the dust seal (15) into its appropriate seat on the upper fork tube (12), making sure that it is correctly placed.
- ●Grasp the lower fork tube (1) and slowly move it up and down a few times.

NOTE The lower fork tube (1) must slide freely and smoothly in the upper fork tube (12), without encountering any resistance; if not, this means that the guide bushing (10), slider bushing (11), or gasket (8) is damaged.

- ●Keeping the upper fork tube (22) upright, push the upper fork tube (22) down to the end of its stroke.
- ●Push the upper fork tube (22) down to the end of its stroke.
  Pour fork oil into the lower fork tube, see 1.12 (LUBRICANT CHART), until it reaches the correct level. Insert a dipstick (13) into the lower fork tube to measure the level.

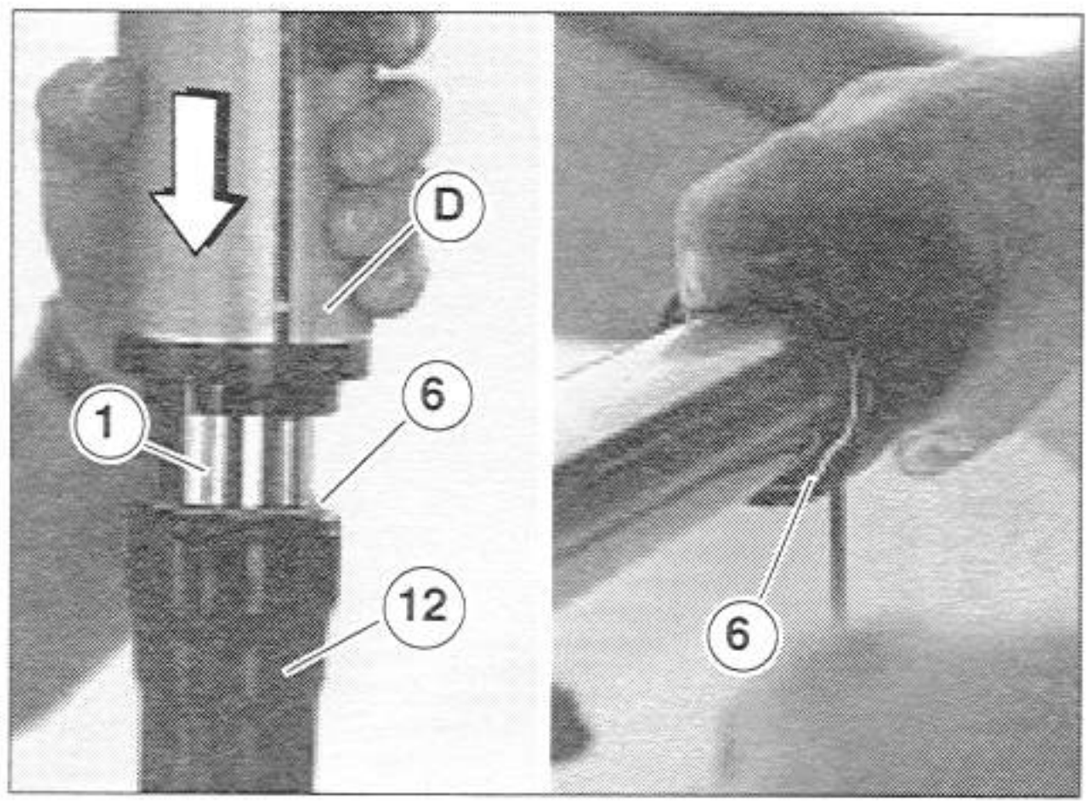

Amount of oil: 31.73 ± 0.15 cuin (520 ± 2.5 cm³).
Oil level: 4.64 ± 0.07 in (118 ± 2 mm) (from the edge of the upper fork tube).

NOTE The upper fork tube (12) must be perfectly upright in order to gauge the oil level accurately.
The oil level must be the same in both tubes.

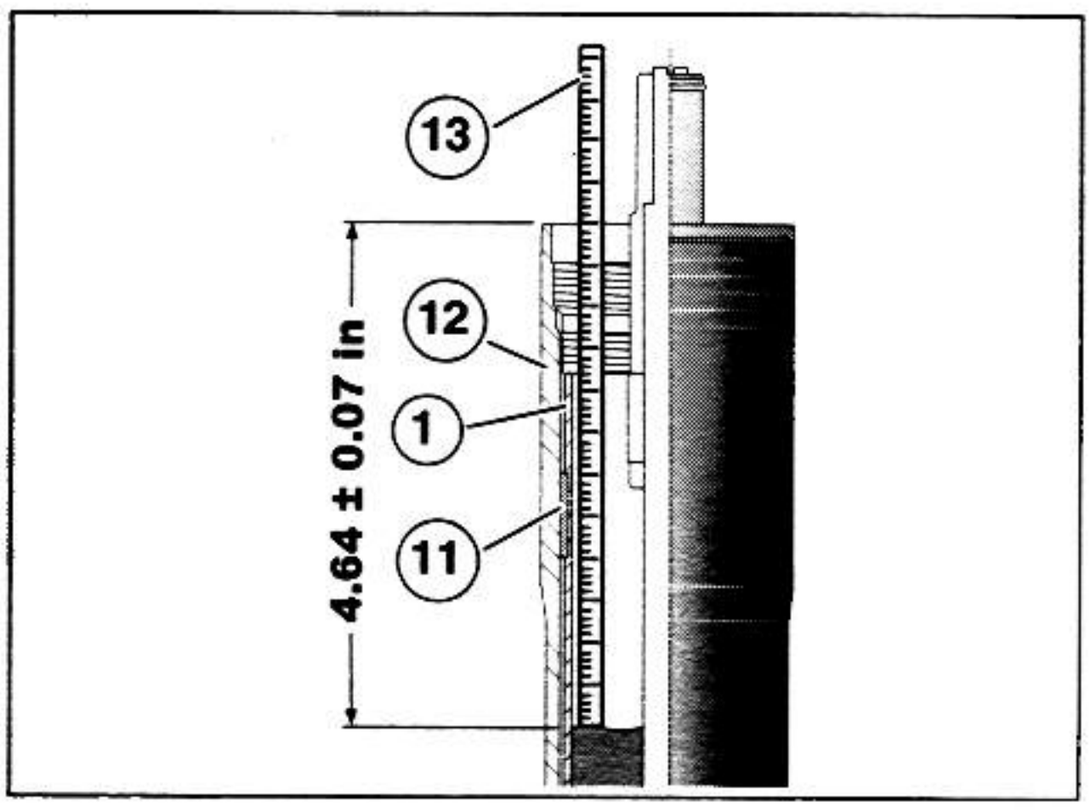

- ◆●Grasp the upper fork tube (12) and slide it slowly up and down about ten times, for approximately 6 inches (150 mm), to allow any trapped air to escape.
- ◆●Push the upper fork tube (12) down to the end of its stroke.
- ◆●Wait a few minutes and check the oil level again; top up if necessary.
- ◆●Insert the following components in the tube (1) in the given order:
- lower collar (14);
- lower spring seat (15);
- spring (16);
- spring spacer tube (17) complete with spring seat and slider ring;
- slider (18);
- washer (19).
- ◆●Unscrew and remove the threaded pin (A1) from the tool (A).
- ◆●Place the stationary part of the tool (A) so that the tooth engages the hole on the spring spacer tube (17).
- ◆●Place the threaded pin (A1) in the hole on the stationary part of the tool (A), making sure that when it is fully inserted it engages the hole in the spring spacer tube (17).

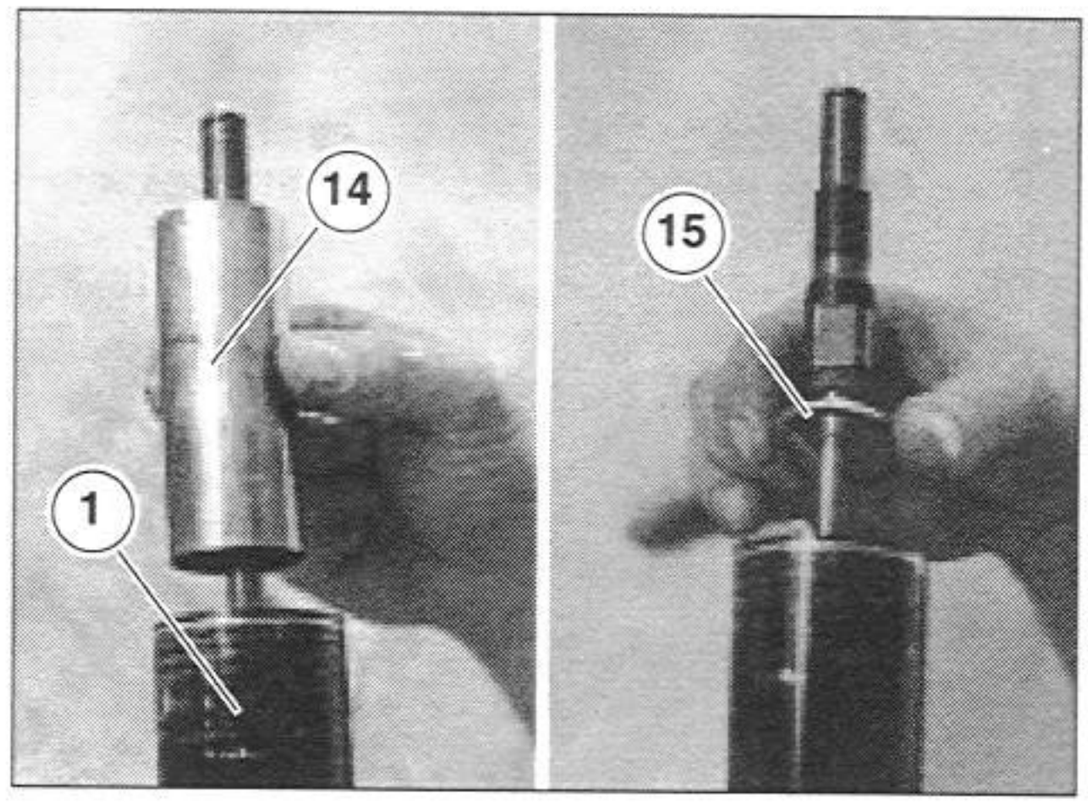

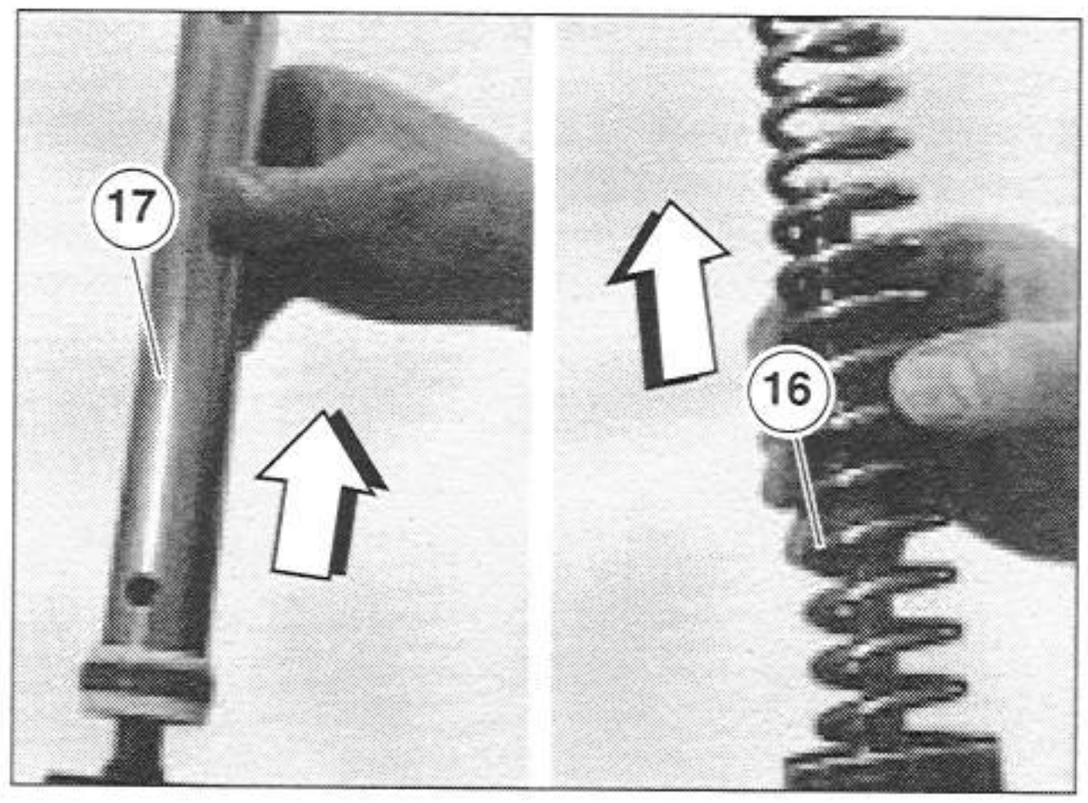

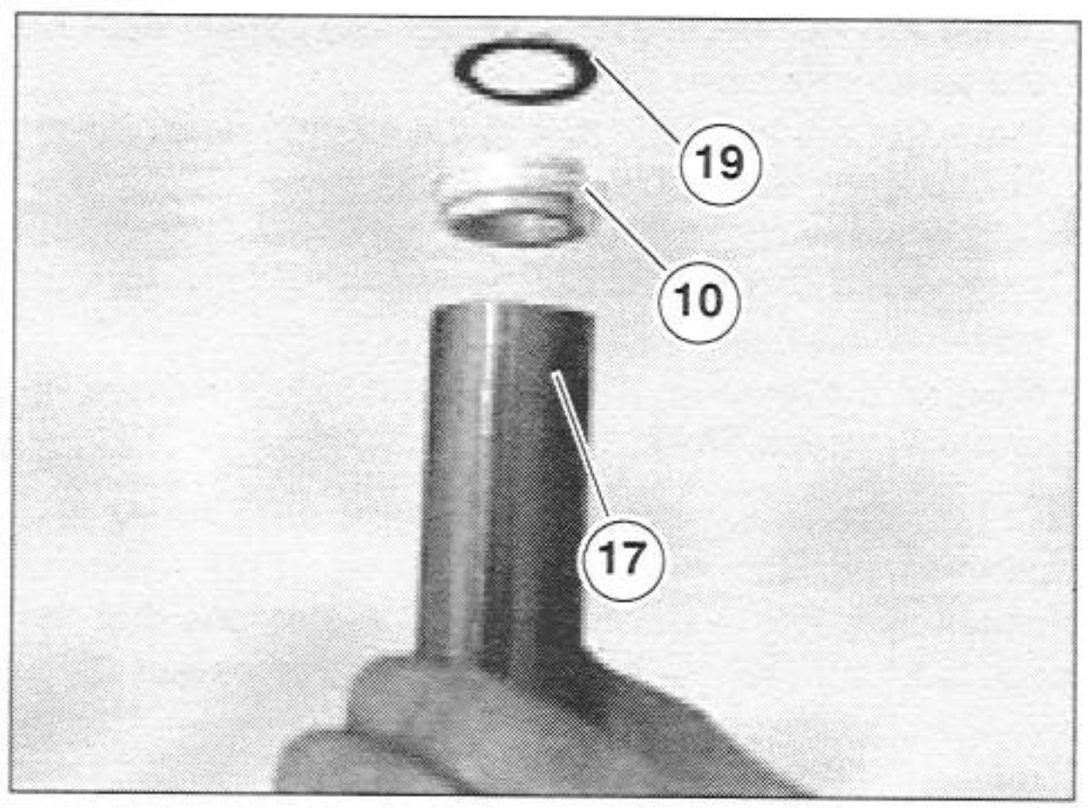

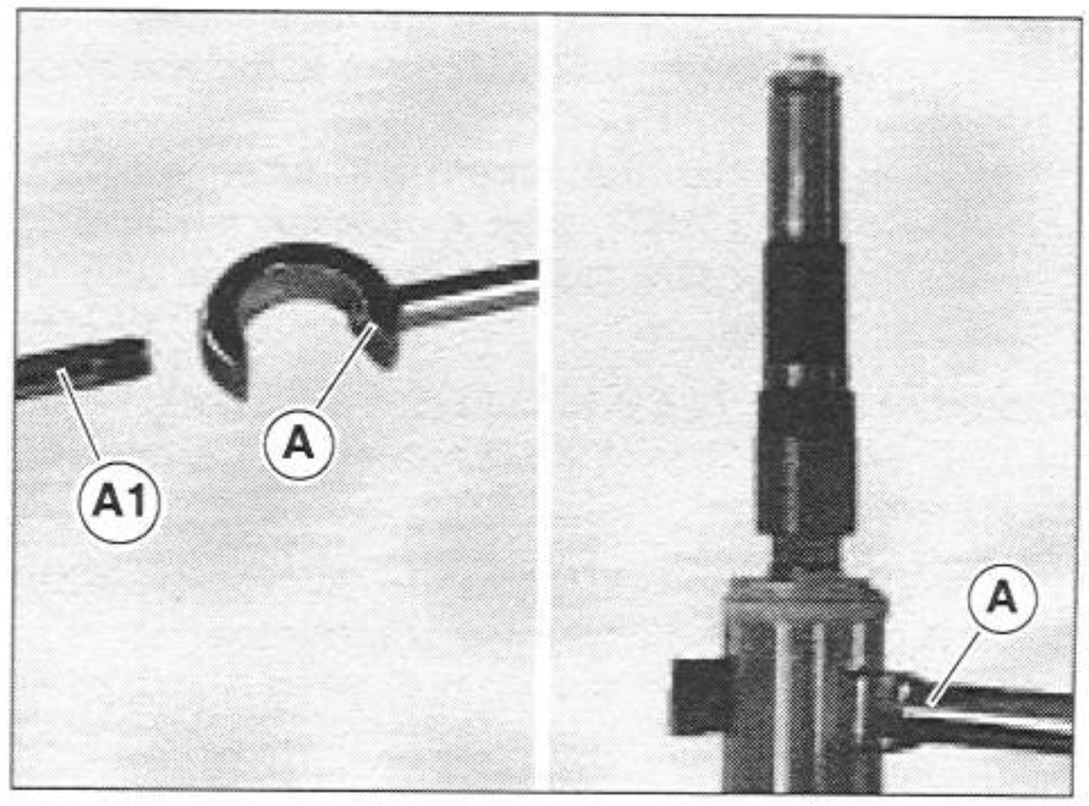

⚠ WARNING

The following operations must be carried out by two mechanics.
Before starting, agree which mechanic will handle which operations.

- ●Rest both hands on the tool (A).
- ●Push downward, at the same time inserting the tool (B) between the lock nut (20) and the washer (19).
- ●While holding the damper rod (3), tighten the upper fork tube cap (21) using the appropriate wrench.

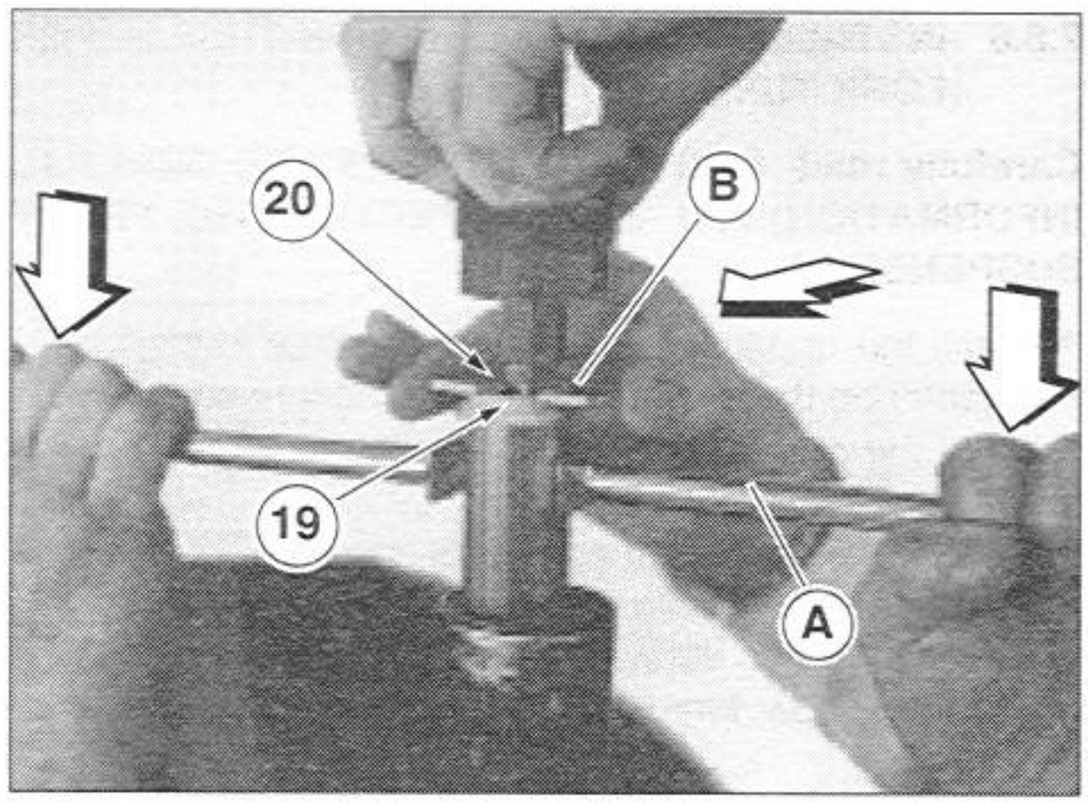

Tightening torque for the upper fork tube cap (5)/ damper rod (9): 25.8 ftlb (35 Nm).

- ●Rest both hands on the tool (A).
- ●Push downward, at the same time removing the tool (B).
- ●Remove the tools (A).
- ●Place the lower fork tube- upper fork tube unit in a vice using the two halves of the special tool (C).
- ●Screw and tighten the upper fork tube cap (5) on the upper fork tube.

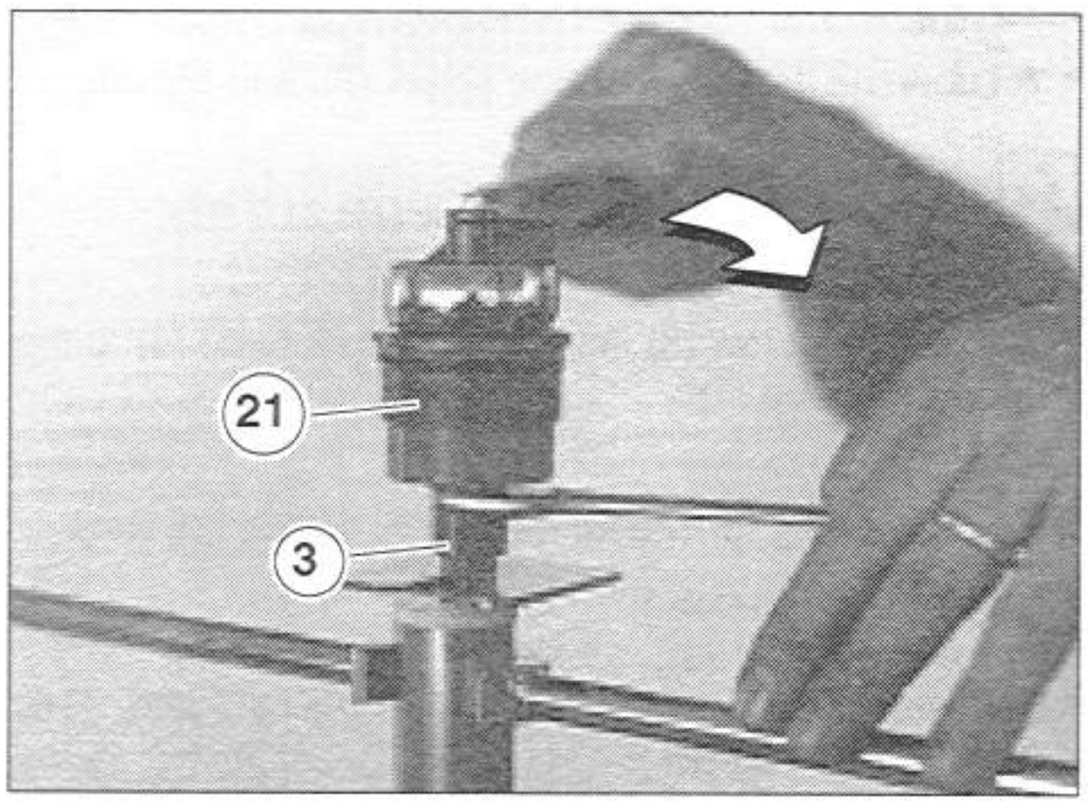

Tightening torque for the upper fork tube cap (5)/ upper fork tube: 25.8 ftlb (35 Nm).

- ●Insert the spring preload thruster (22).
- ●Screw on the spring preload adjuster (23).
- ●Place the retainer ring (24) in its seat.
- ●Use the spring preload adjuster (23) and the upper adjuster screw (25) to restore the correct attitude, which must be the same as that of the other lower fork tube/upper fork tube unit, see 2.29.2 (ADJUSTING THE FRONT FORK).

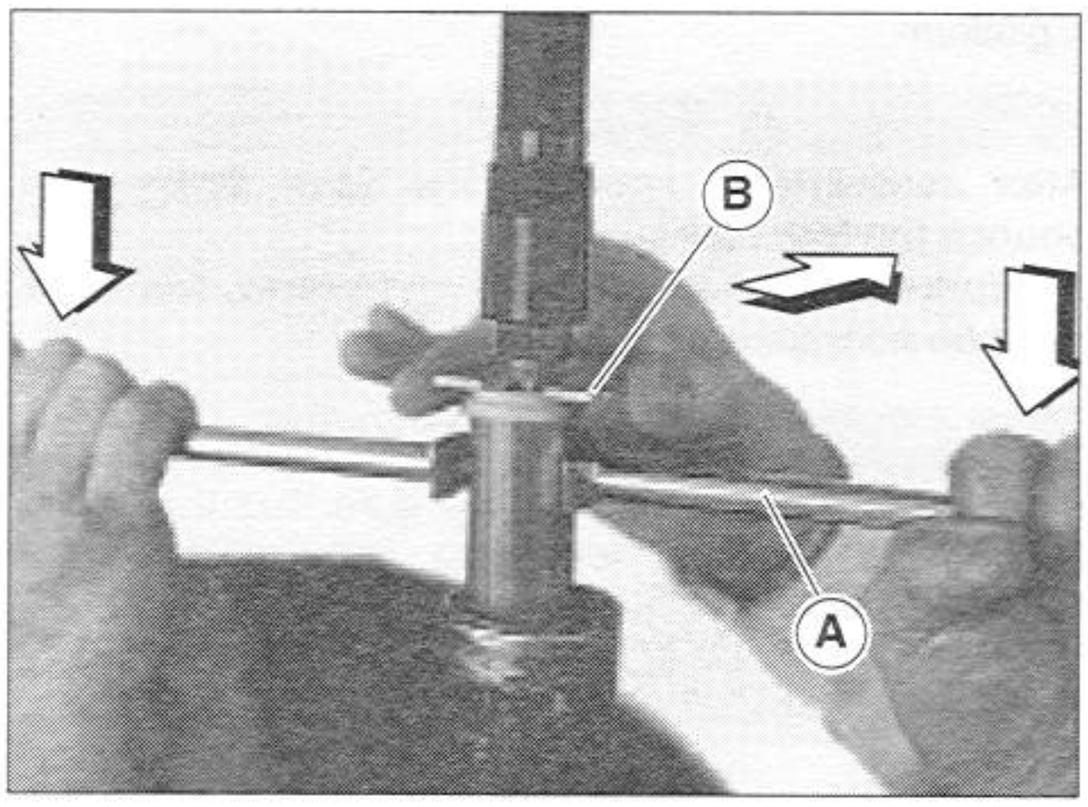

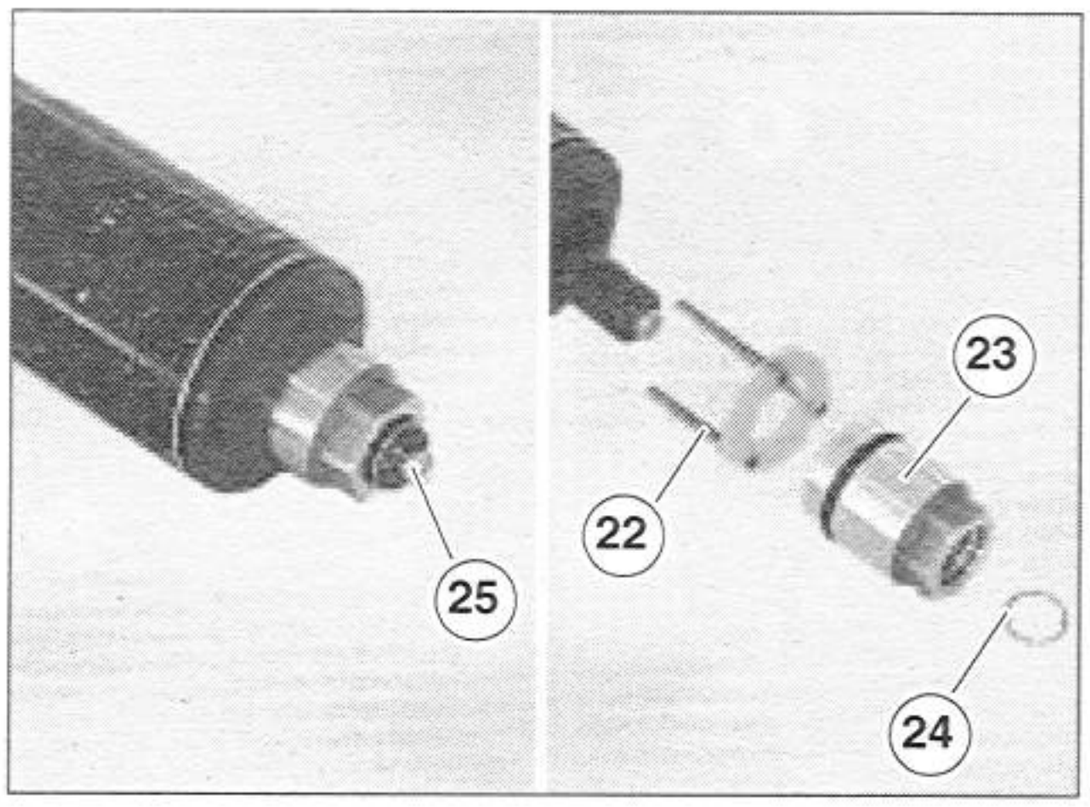

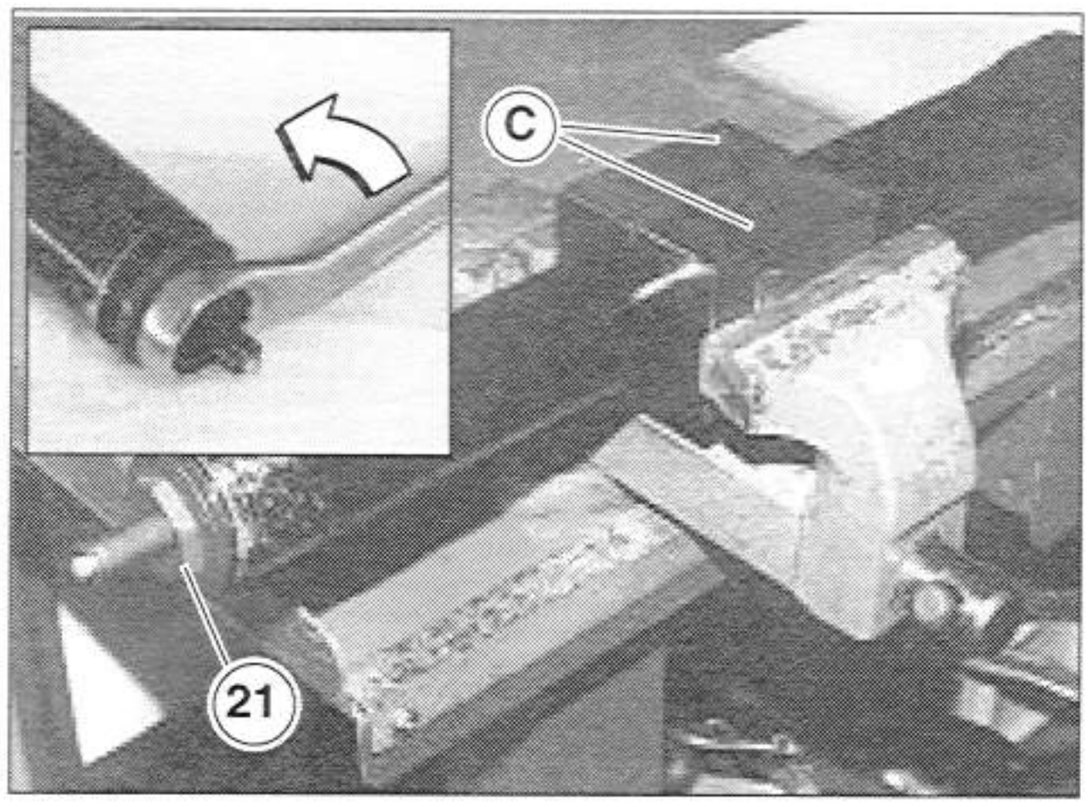

7.8.6 INSTALLING THE LOWER FORK TUBE/UPPER FORK TUBE UNIT

Carefully read 1.3.9 (PRECAUTIONS AND GENERAL INFORMATION) and 2.29 (INSPECTING THE FRONT SUSPENSION).

- Install the upper fork tube (1) and lower fork tube (2) together on the triple clamp (3) and fork head (4).
- Insert the axle (5) through both tubes to align the lower fork tube holes.
- Make sure that the upper fork tube (1) is correctly inserted into the triple clamp (3) and fork head (4).
- Tighten the two screws (6) fastening the triple clamp (3) to the upper fork tube (1).

Tightening torque for screws (6): 18 ftlb (25 Nm).

- ★Lubricate the thread of the screw (7), and tighten.

Tightening torque for screw (7): 21.7 ftlb (30 Nm).

- Tighten the screw (8) fastening the fork head (4) to the upper fork tube (1).

Tightening torque for screw (8): 18 ftlb (25 Nm).

- Lower the lift platform.
- Remove the axle (5).
- Reassemble the wheel, see 7.2.1 (REMOVING THE COMPLETE WHEEL).
- Remove the belts fastening the rear drive train to the platform.

⚠ WARNING

After reassembly, squeeze the front brake and bounce the fork repeatedly.
The forks must slide smoothly and evenly, and there must be no traces of oil on the tubes.

⚠ DANGER

Before using the vehicle, make sure that the riding position is correct, see 2.29.2 (ADJUSTING THE FRONT FORK).

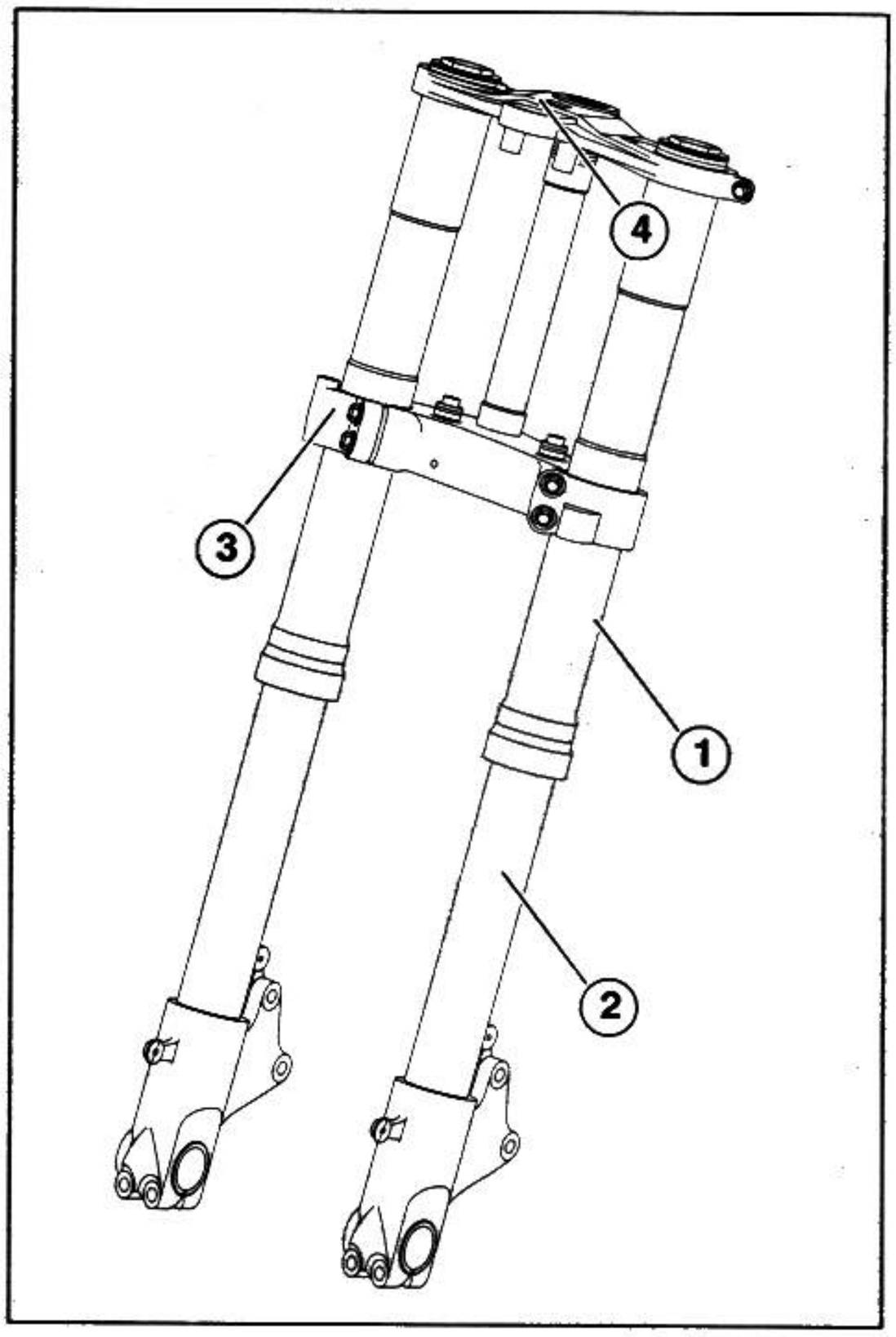

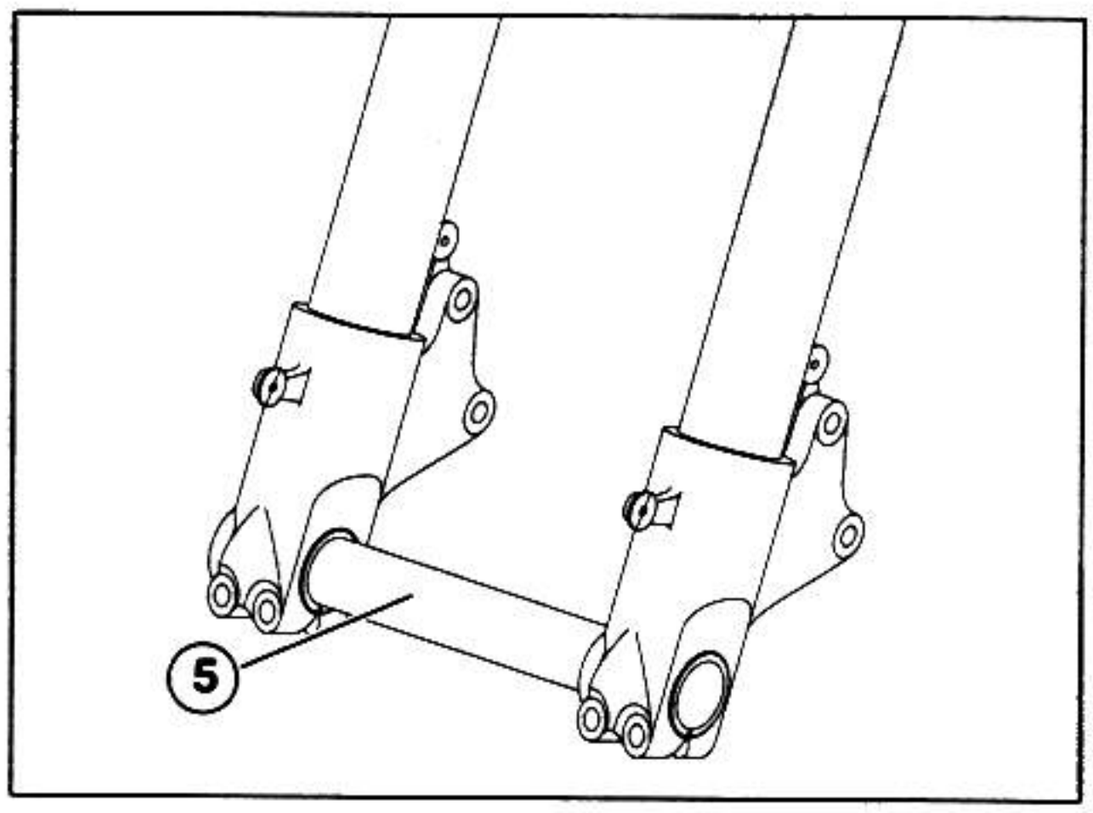

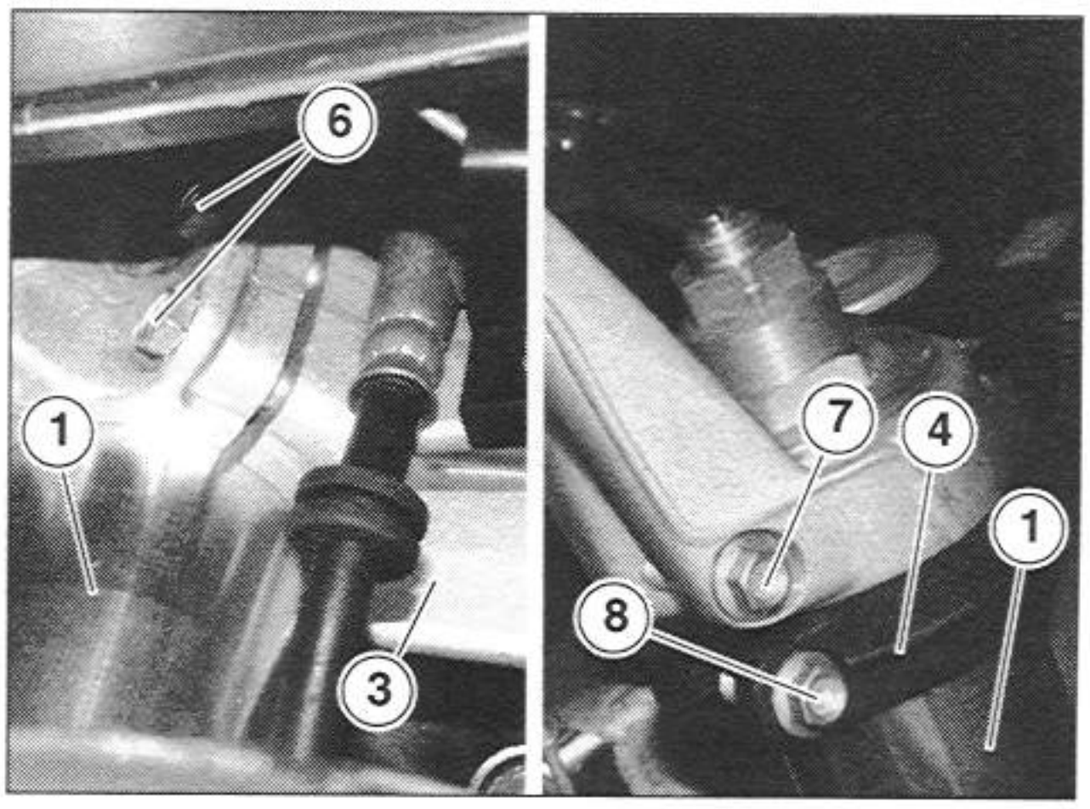

7.9 SWINGING ARM

7.9.1 REMOVING THE SWINGING ARM

Carefully read 1.3.9 (PRECAUTIONS AND GENERAL INFORMATION) and 2.30 (SWINGING ARM).

- Place the vehicle on the center stand.
- Remove the rear wheel, see 7.3.1 (REMOVING THE COMPLETE WHEEL).
- Remove both side fairings, see 7.1.28 (REMOVING THE SIDE FAIRINGS).
- Remove both lower fairings, see 7.1.33 (REMOVING THE LOWER FAIRING).
- Remove the countershaft sprocket case, see 2.35.4 (INSPECTING THE DRIVE CHAIN GUIDE PLATE).
- Unscrew and remove the nut (1) and remove the pin (2).

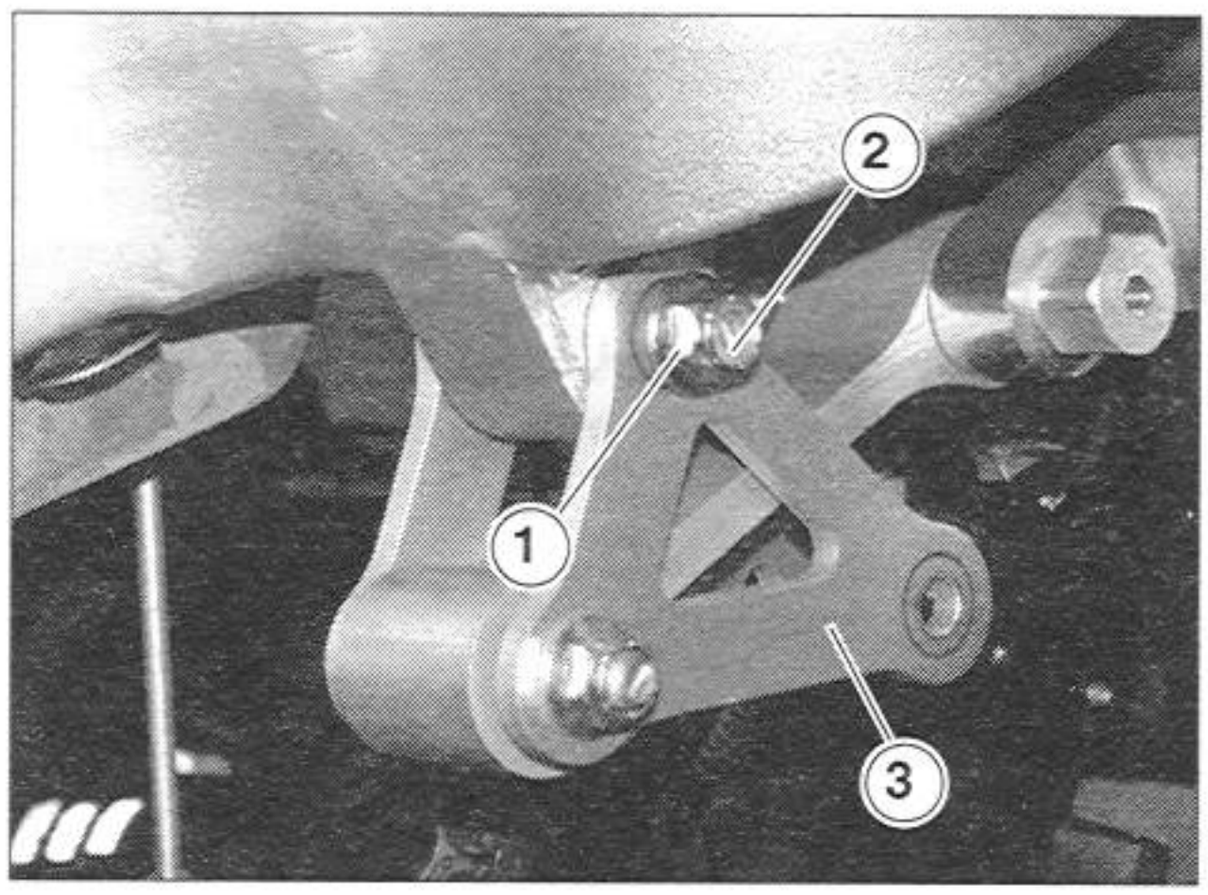

Tightening torque for nut (1): 36 ftlb (50 Nm).

- Remove the double connecting rod (3) from the swinging arm, leaving it attached to the frame.
- Remove the sprocket hub, following the first ten steps in paragraph 7.4.1 (REMOVING THE FINAL DRIVE ASSEMBLY).

NOTE Engage first gear to prevent rotation of the countershaft sprocket (4) and allow you to unscrew the screw (5).

- Unscrew and remove the screw (5), retrieving the two washers (6-7), and remove the countershaft sprocket (4).

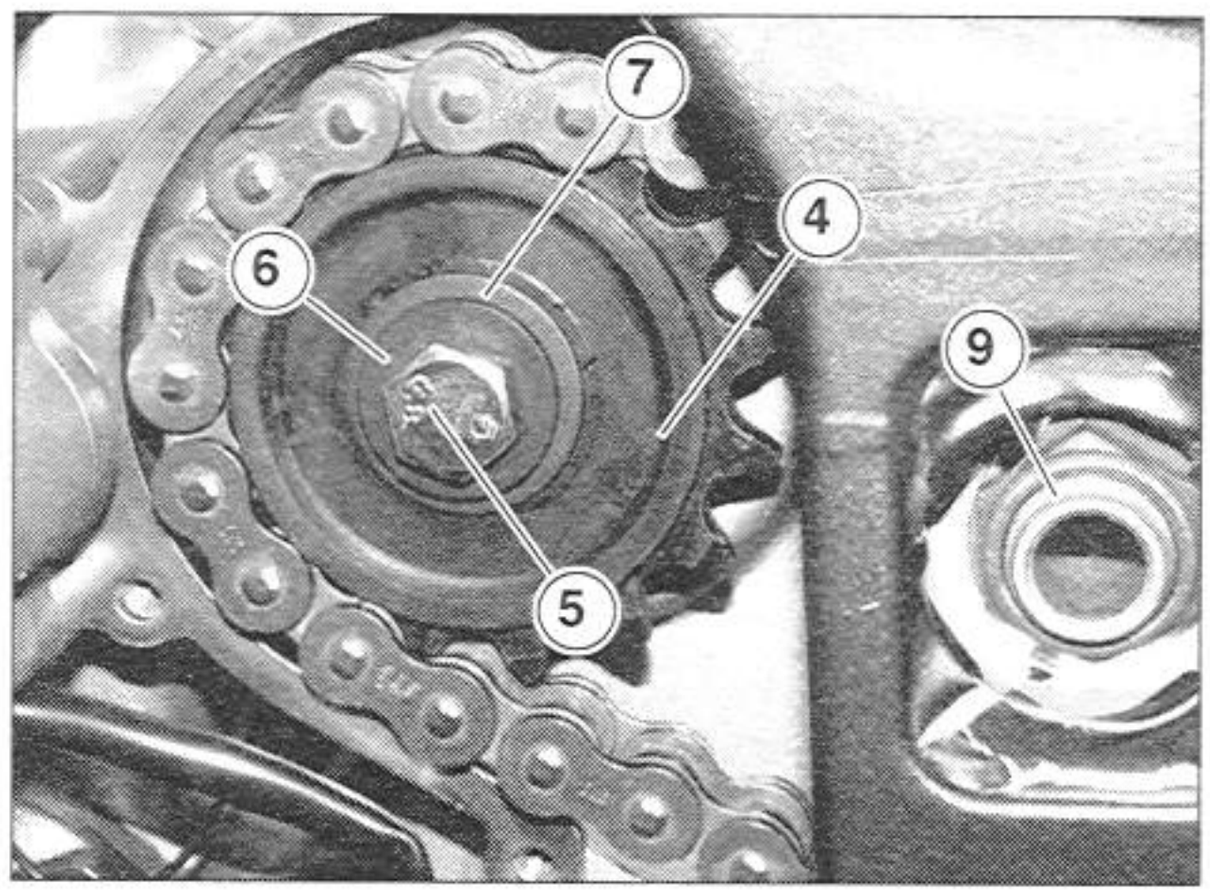

Tightening torque for screw (5): 36 ftlb (50 Nm).

- Remove the expansion tank, see 7.1.52 (REMOVING THE EXPANSION TANK).
- Remove rear shock absorber, see 7.10.1 (REMOVING THE SHOCK ABSORBER).
- Remove both the rider footrest supports, see 7.1.45 (REMOVING THE LEFT RIDER FOOTREST SUPPORT) and 7.1.46 (REMOVING THE RIGHT RIDER FOOTREST SUPPORT).
- Remove the rear brake master cylinder and the rear brake oil reservoir, see 7.6.5 (REMOVING THE BRAKE MASTER CYLINDER).
- Disconnect the odometer sensor connector (8) from the main wiring.

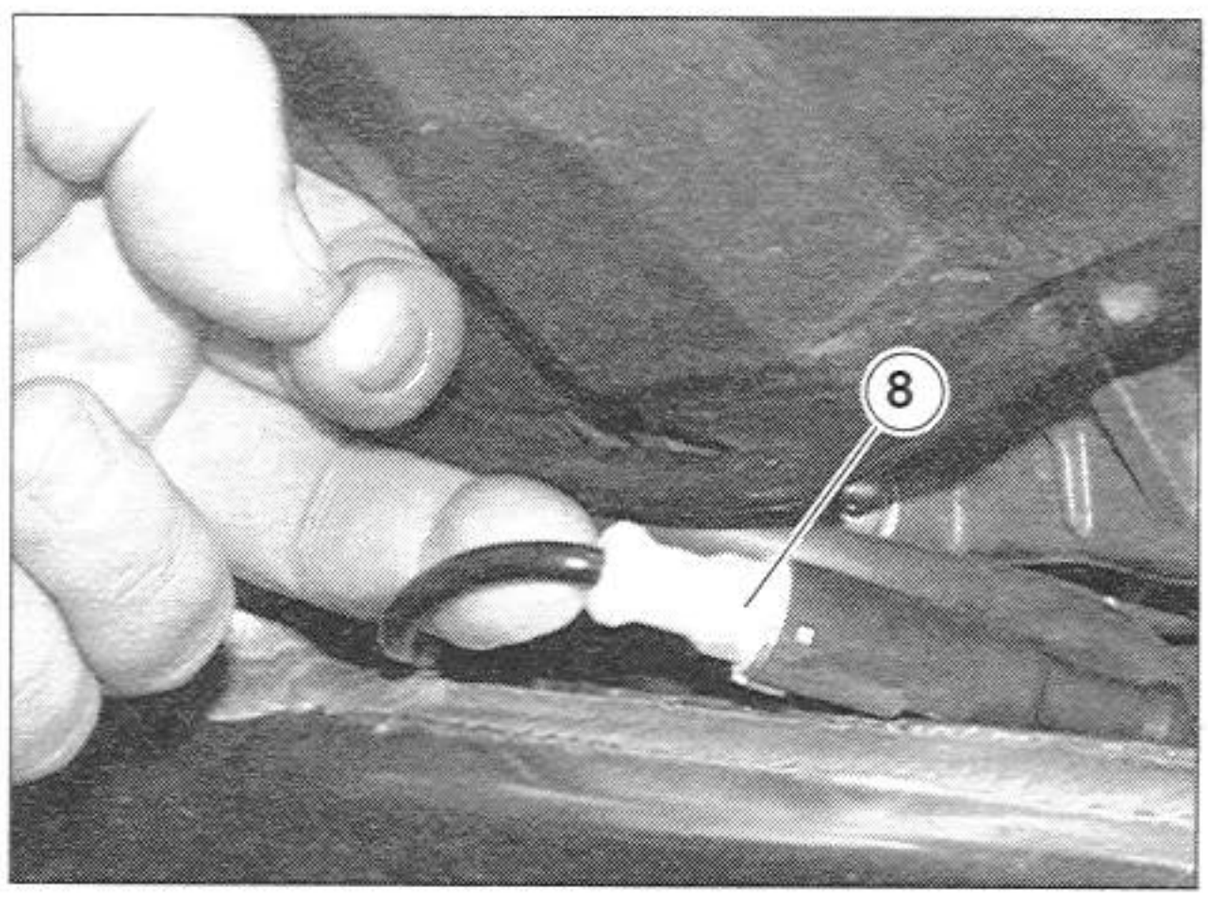

NOTE When reassembling, make sure the connector (8) is fitted properly.

- Unscrew and remove the nut (9), retrieving the washer.

Tightening torque for nut (9): 65 ftlb (90 Nm).

NOTE Have on hand the special tool OPT code 8140203 (socket wrench for adjusting swinging arm pivot - engine mounts).

- Use the special socket wrench to loosen and remove the lock ring (10).
- Working from the right-hand side of the vehicle, rotate the swinging arm pivot (11) counter-clockwise, which will cause the adjuster bushing (12) to rotate with it and will loosen it completely.

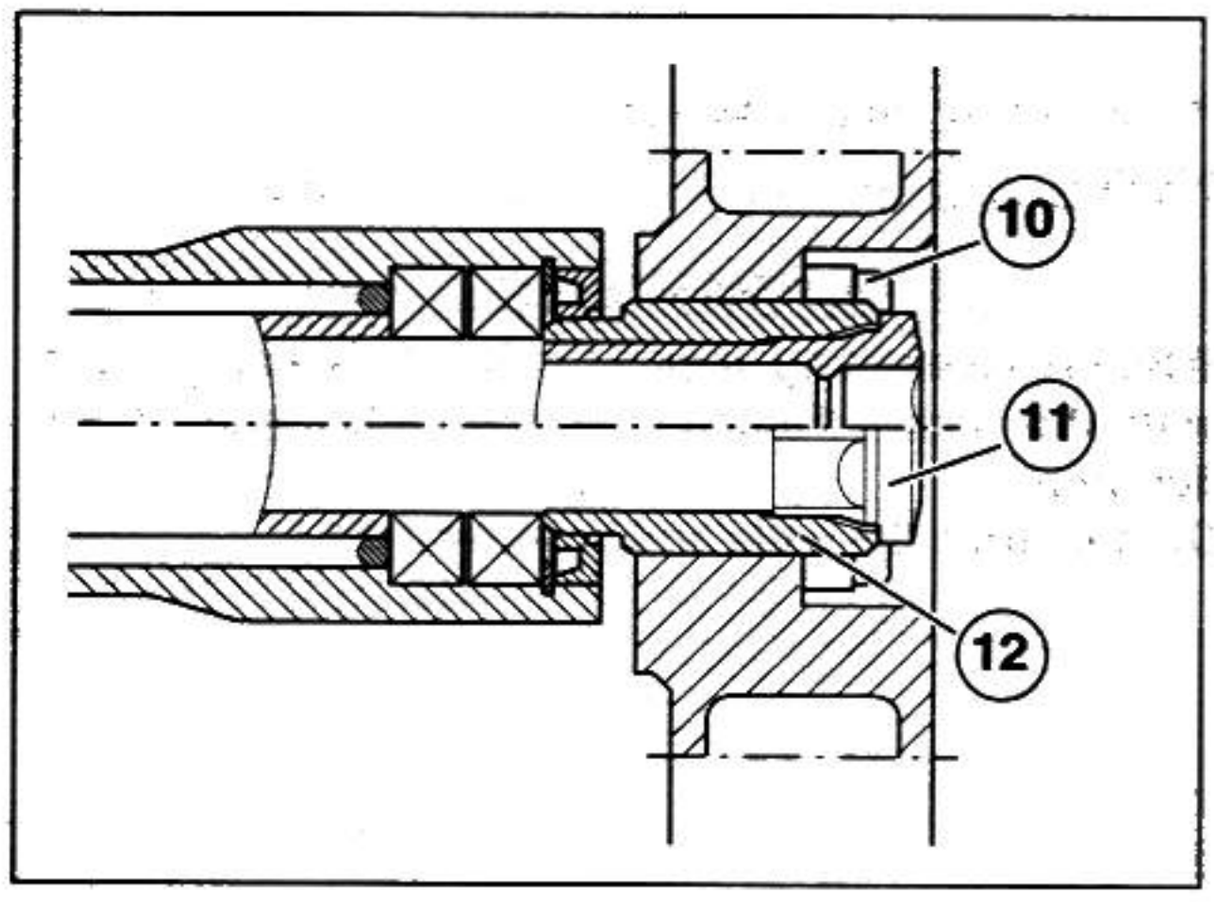

⚠ WARNING

Due to the weight of the rear drive train, the following operations must be carried out by two mechanics.
Before starting, agree which mechanic will handle which operations.
Proceed very carefully with removal operations.
Support the swinging arm in front to keep it from falling accidentally.

- Support the front part of the swinging arm, and simultaneously remove the swinging arm pivot (11) out from the right.
- Slide the adjuster bushing (12) from the pivot (11).

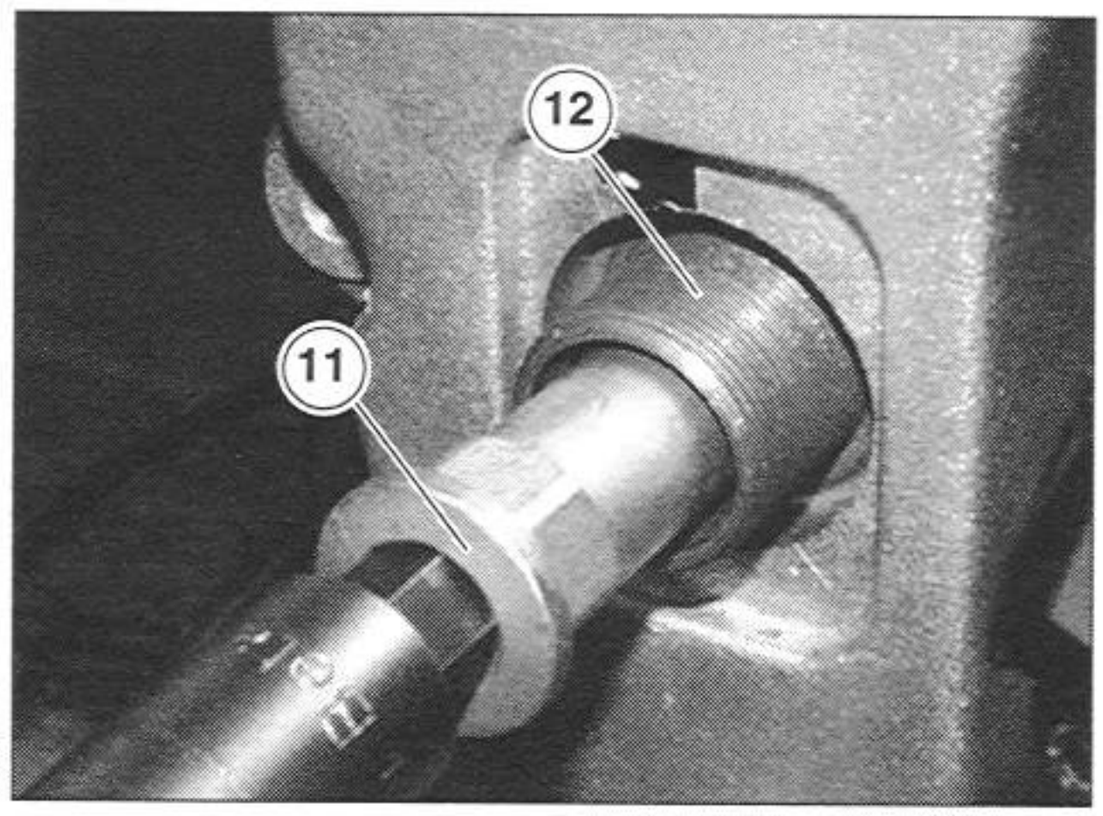

⚠ WARNING

While removing the rear drive train, be careful that the drive chain does not catch on anything.

- Remove the swinging arm, complete with axle, sliding it out from behind.

NOTE Remove the rear wheel axle if necessary, see 7.4.1 (REMOVING THE FINAL DRIVE ASSEMBLY).

7.9.2 DISASSEMBLING THE SWINGING ARM

Carefully read 1.3.9 (PRECAUTIONS AND GENERAL INFORMATION).

- Remove the swinging arm, see 7.9.1 (REMOVING THE SWINGING ARM).
- Use a rag to clean both sides of the bearing housings.
- Slip off the bushing (1).
- Remove the seal (2).
- Remove the seal (3).
- Remove the snap ring (4).
- Use a special extractor to remove the two bearings (5) and the roller bearing (6).

NOTE Inspect the bearings each time the swinging arm is disassembled. Replace if necessary.

- Remove the internal shim (7) and retrieve the two O-rings (8).
- Thoroughly clean inside the bearing seat.

NOTE Wash all components with clean solvent.

⚠ WARNING

When reassembling, insert the bearings using a drift with the same diameter as the outer ring of the bearings.
Do not strike the balls and/or inner race.

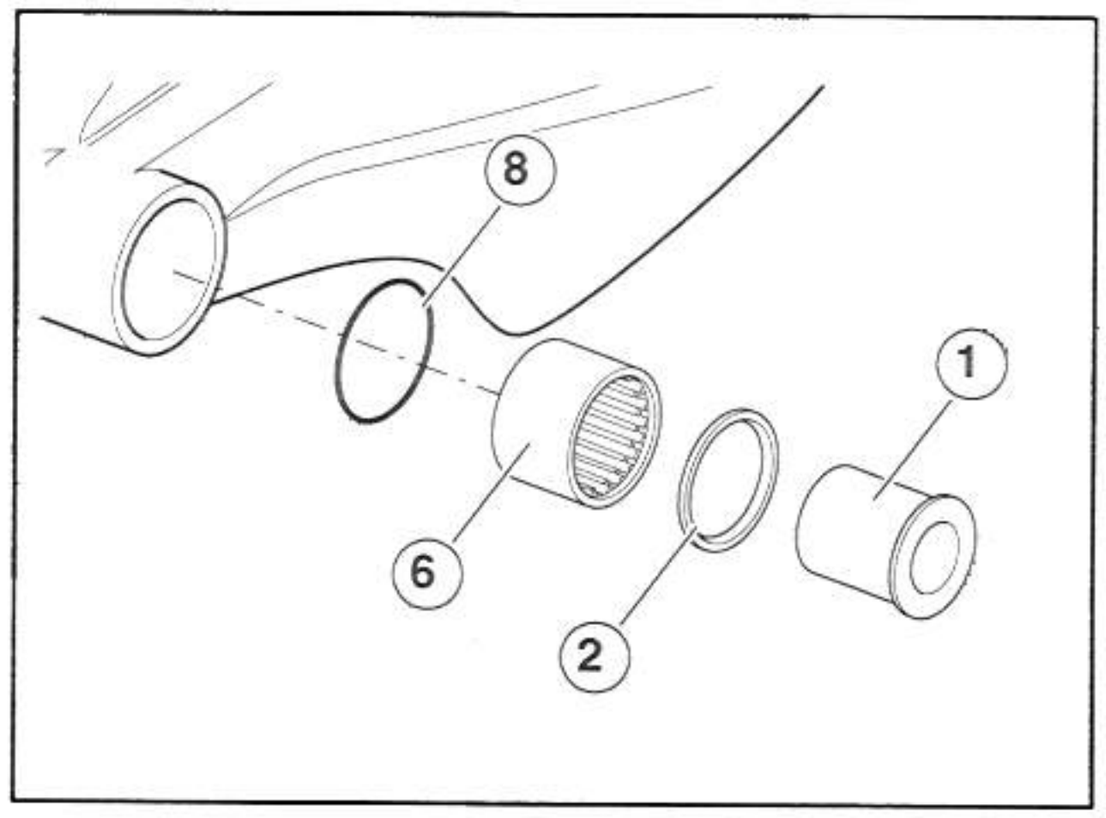

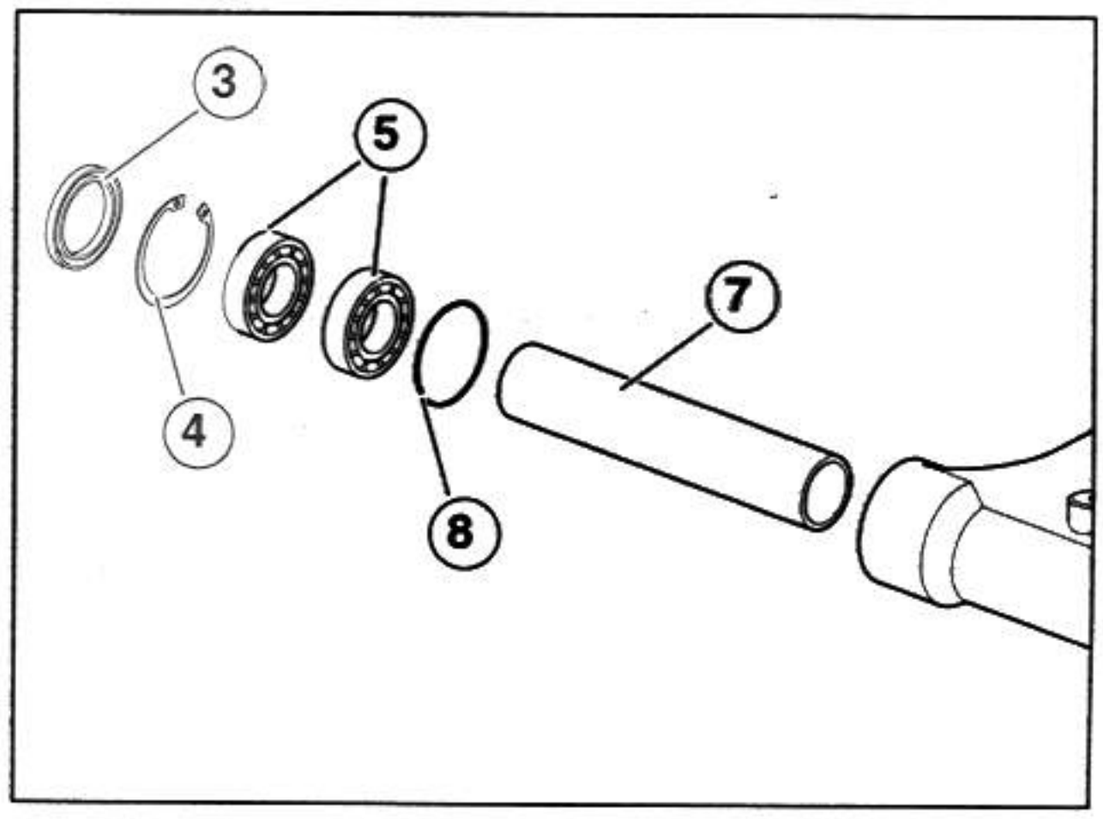

7.9.3 CHECKING THE COMPONENTS

⚠ WARNING

Make sure that none of the components are visibly bent, broken, cracked and /or dented.
Replace any damaged components.

BEARINGS

- Manually turn the inner race (1) of each ball bearing. The rollers should turn smoothly and quietly.
  There should be no axial clearance.
  Any bearings found to have these faults must be replaced.

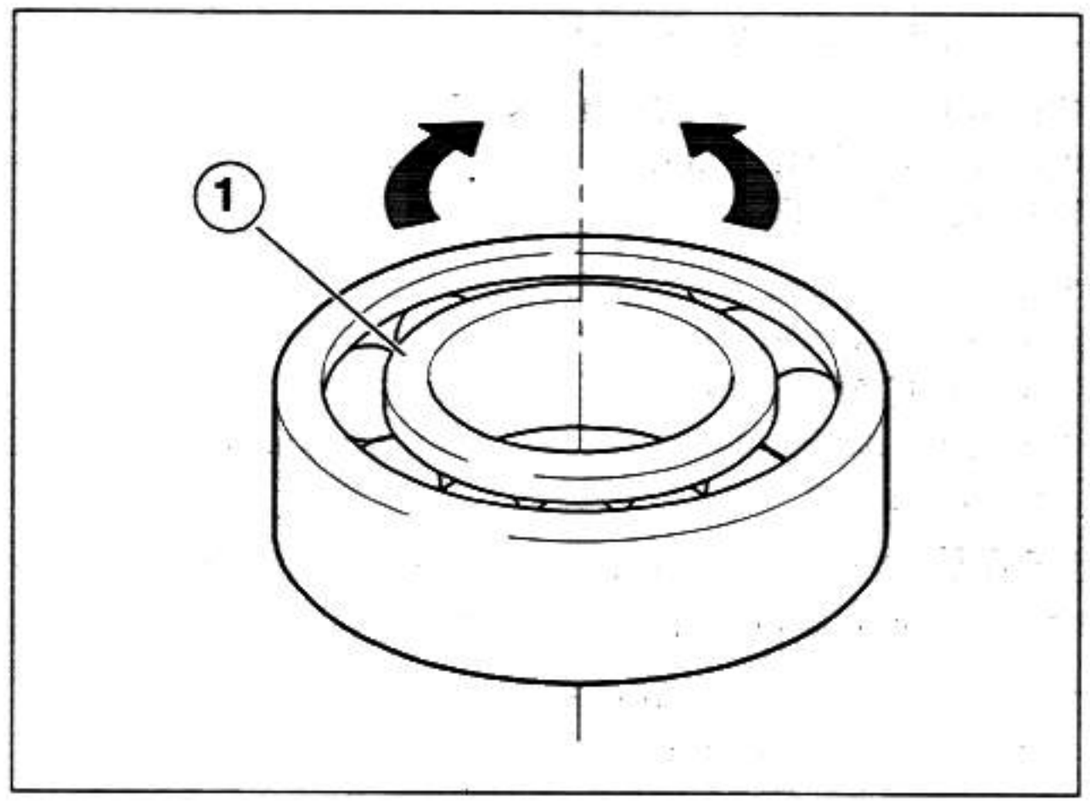

⚠ WARNING

Apply grease to the balls (on the sides of each bearing) and rollers, see 1.12 (LUBRICANT CHART).

GASKETS

- Make sure the gaskets are intact; replaced if damaged or excessively worn.

SWINGING ARM PIVOT

- Use a dial indicator to make sure that the swinging arm pivot (2) eccentricity does not exceed the allowable limit.
  If not, replace the pivot (2).

Maximum pivot eccentricity: 0.012 in (0.3 mm).

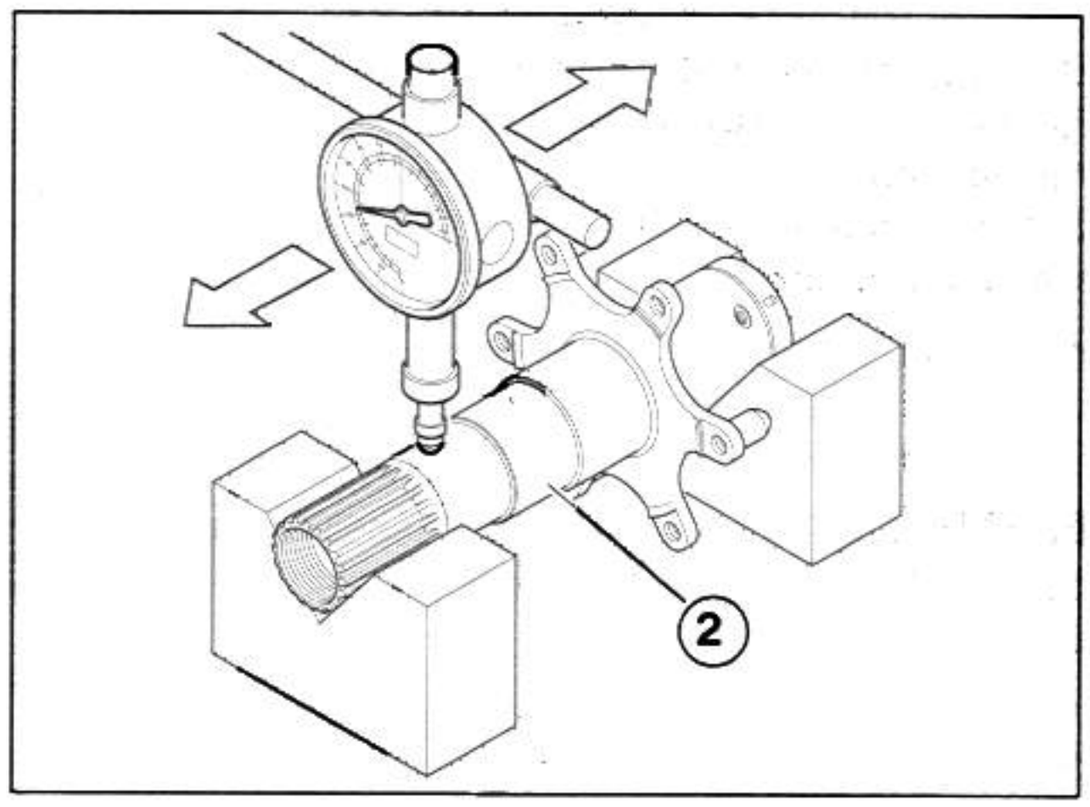

7.9.4 RE-INSTALLING THE SWINGING ARM

Carefully read 1.3.9 (PRECAUTIONS AND GENERAL INFORMATION) and 2.30.1 (ADJUSTING THE SWINGING ARM).

- Spread a light coating of lubricant grease along the entire length of the swinging arm pivot (1), see 1.12 (LUBRICANT CHART).
- Insert the adjuster bushing (2) in its seat and screw it on by hand.

NOTE The adjuster bushing (2) must not protrude beyond the inside edge of the frame.

- Place the drive chain (3) over the front left part of the swinging arm, and tape it in place.

⚠ WARNING

Due to the weight of the rear drive train, the following operations must be carried out by two mechanics.
Before starting, agree which mechanic will handle which operations.

- Support the front of the swinging arm, maneuver it so that the holes are aligned, and at the same time insert the pivot (1).

NOTE Make sure that the hex head on the pivot (1) is correctly inserted in the hexagonal recess on the adjuster bushing (2).

- Fit the lock ring (4) and screw it on by hand a few turns.
- Place the washer (5) and nut (6) on the swinging arm pivot, tightening them by hand.
- Now adjust the swinging arm, see 2.30.1 (ADJUSTING THE SWINGING ARM).
- Remove the tape to release the chain (3)
- Fit the chain (3) back over the countershaft sprocket (7).

NOTE Apply (7) LOCTITE® Anti-Seize on the internal spline of the countershaft sprocket.

- Insert the countershaft sprocket (7) complete with chain (3) on the shaft.

NOTE Apply LOCTITE® 243 to the thread of the screw (8).

- Place the washers (9) and (10) over the screw (8).
- Screw in and tighten the screw (8).

Tightening torque for screw (8): 36 ftlb (50 Nm).

- Replace the voltage regulator, see 2.35.4 (INSPECTING THE DRIVE CHAIN GUIDE PLATE).
- Adjust the drive chain tension, see 2.35.3 (ADJUSTING THE DRIVE CHAIN).
- Connect the odometer sensor connector (13) to the main wiring.
- Replace the rear brake master cylinder and brake oil reservoir, see 7.6.5 (REMOVING THE BRAKE MASTER CYLINDER).

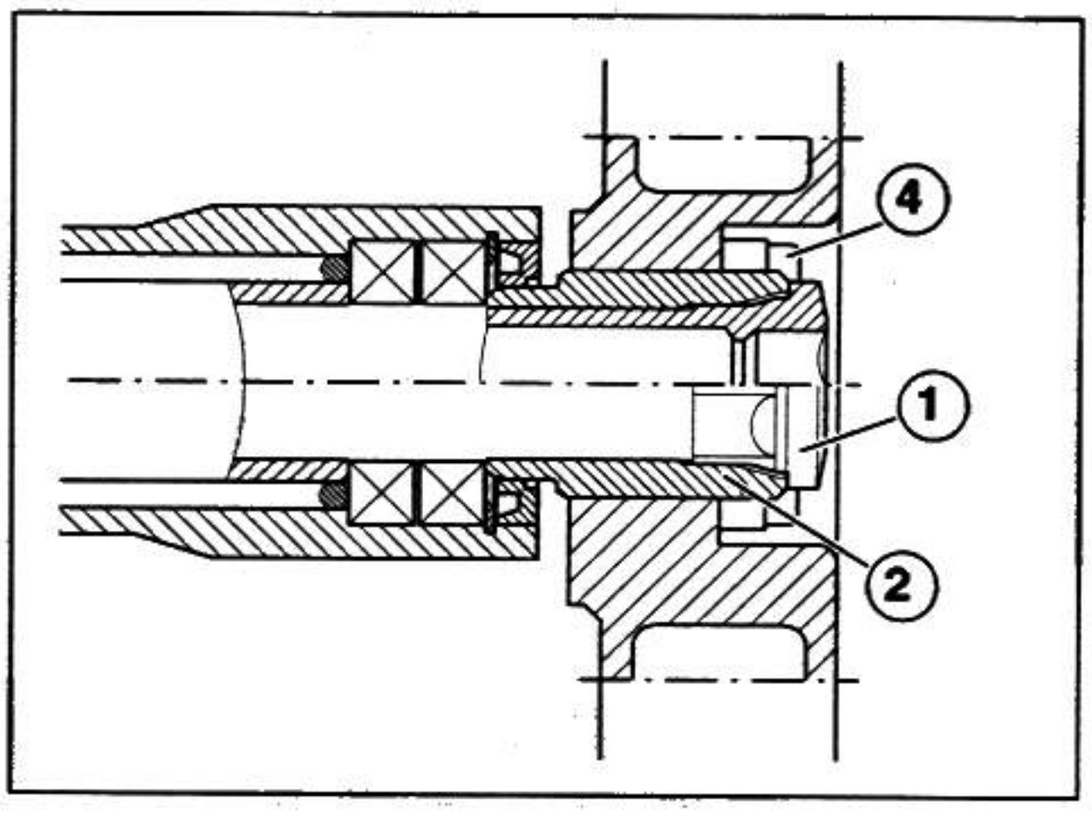

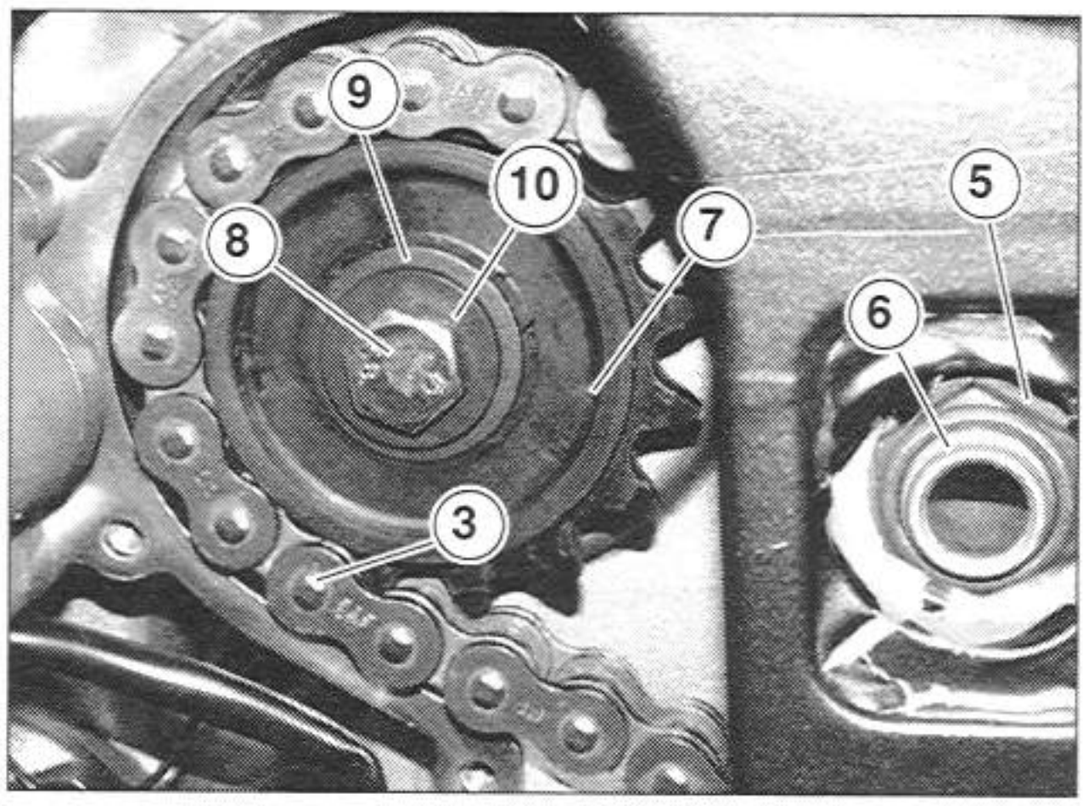

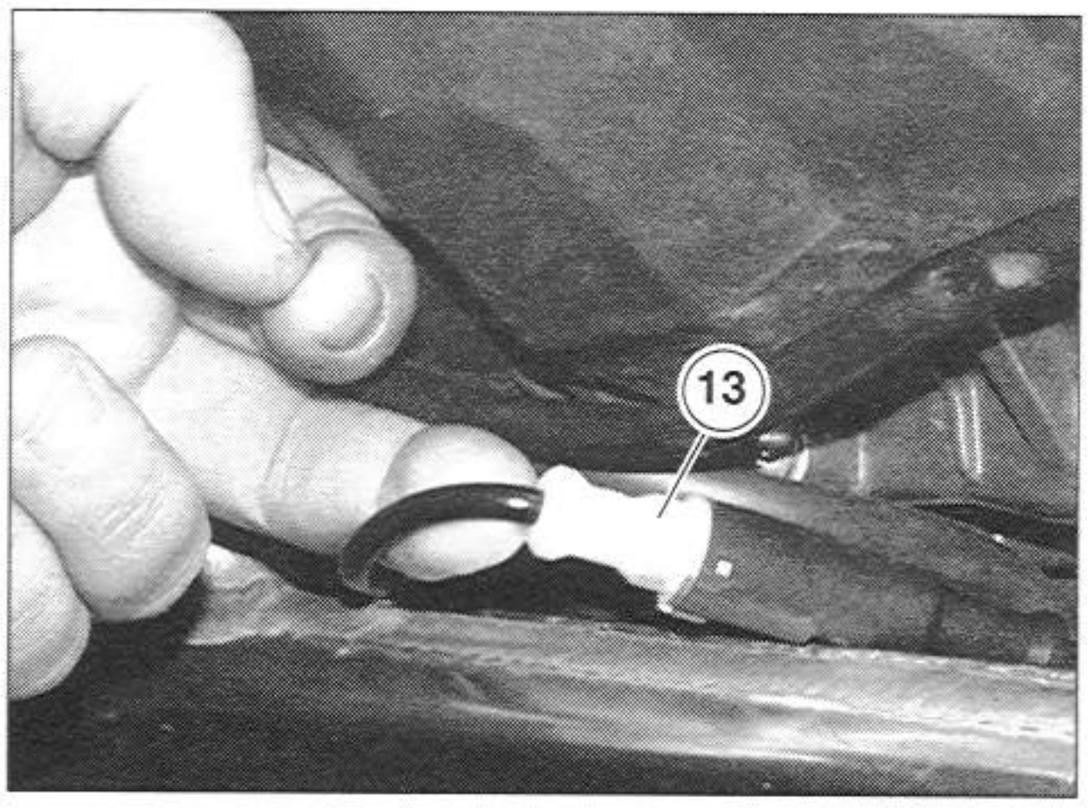

- Replace both rider footrest supports, see 7.1.45 (REMOVING THE LEFT RIDER FOOTREST SUPPORT) and 7.1.46 (REMOVING THE RIGHT RIDER FOOTREST SUPPORT).
- Replace the rear shock absorber, see 7.10.1 (REMOVING THE SHOCK ABSORBER).
- Replace the expansion tank, see 7.1.52 (REMOVING THE EXPANSION TANK).
- Replace the sprocket hub, see 7.4.1 (REMOVING THE FINAL DRIVE ASSEMBLY).
- Replace the rear wheel, see 7.3.1 (REMOVING THE COMPLETE WHEEL).
- Replace the double connecting rod (14) tightening the nut (15) on the pivot (16).

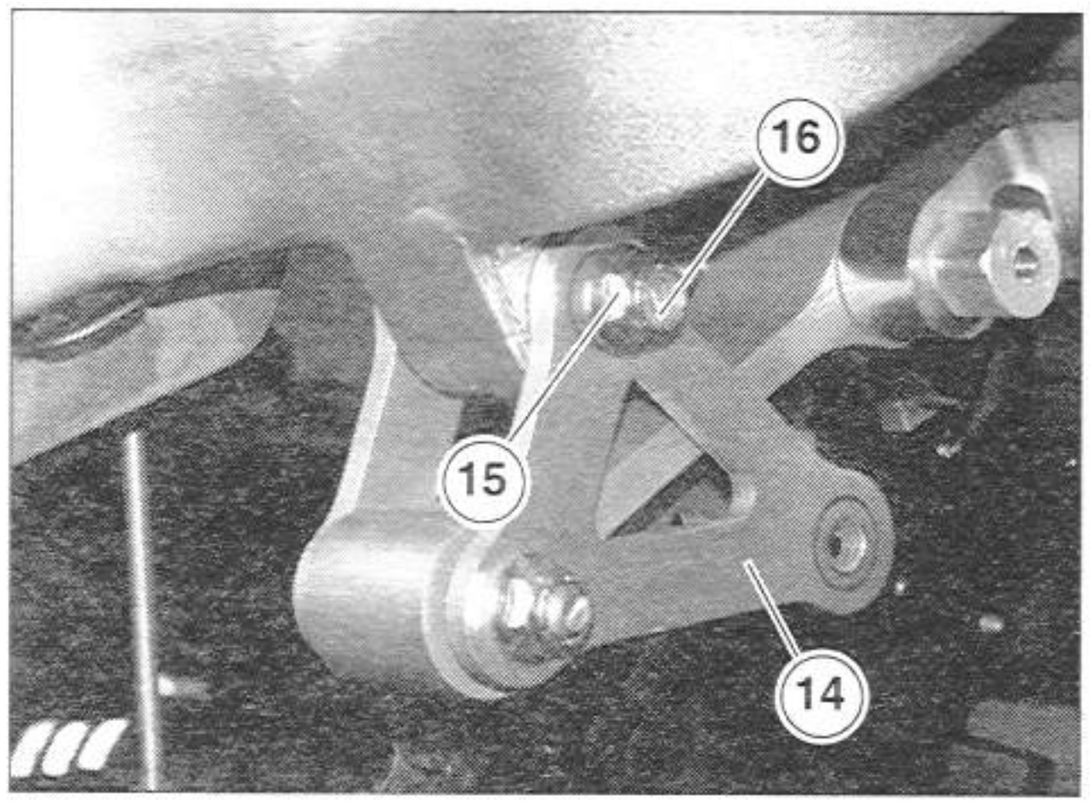

Tightening torque for nut (16): 36 ftlb (50 Nm).

- Replace the shift lever (11) on the serrated gearbox pivot, making sure that it is properly aligned.
- Tighten the screw (12).

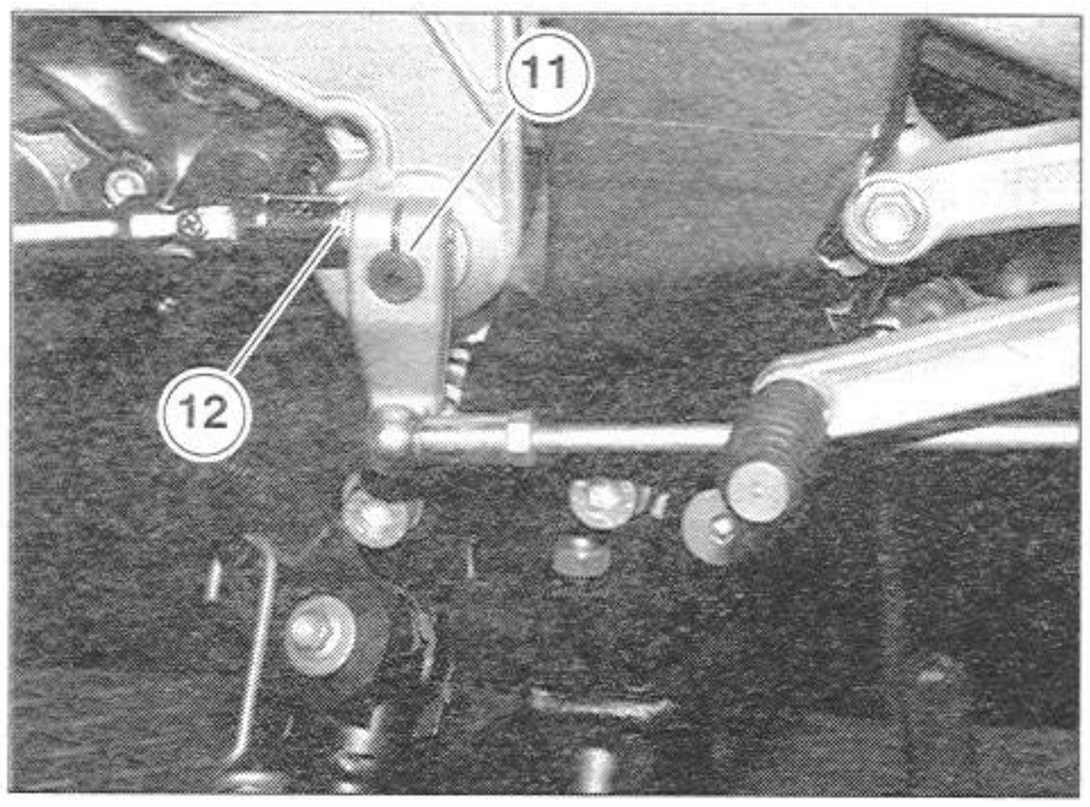

Tightening torque for screw (12): 7.2 ftlb (10 Nm).

- Replace both lower fairings, see 7.1.33 (REMOVING THE LOWER FAIRING).
- Replace both side fairings, see 7.1.28 (REMOVING THE SIDE FAIRINGS).

7.10 REAR SUSPENSION

7.10.1 REMOVING THE SHOCK ABSORBER

Carefully read 1.3.9 (PRECAUTIONS AND GENERAL INFORMATION) and 2.31.1 (REAR SUSPENSION).

- Remove both lower fairings, see 7.1.33 (REMOVING THE LOWER FAIRING).
- Remove the tank, see 7.1.6 (REMOVING THE FUEL TANK COMPLETELY).
- Remove the exhaust pipes, see 7.1.51 (REMOVING THE EXHAUST PIPES).

NOTE It will be easier and you will have more room to work if you remove the rear wheel, see 7.3.1 (REMOVING THE COMPLETE WHEEL).

- Remove both the passenger footrest supports, see 7.1.43 (REMOVING THE PASSENGER FOOTREST SUPPORTS).
- Loosen the two upper screws (1).

Tightening torque for screws (1): 36 ftlb (50 Nm).

- Unscrew and remove the two lower screws (2).

Tightening torque for screws (2): 36 ftlb (50 Nm).

- Pull the drain tube (3) from its slot.

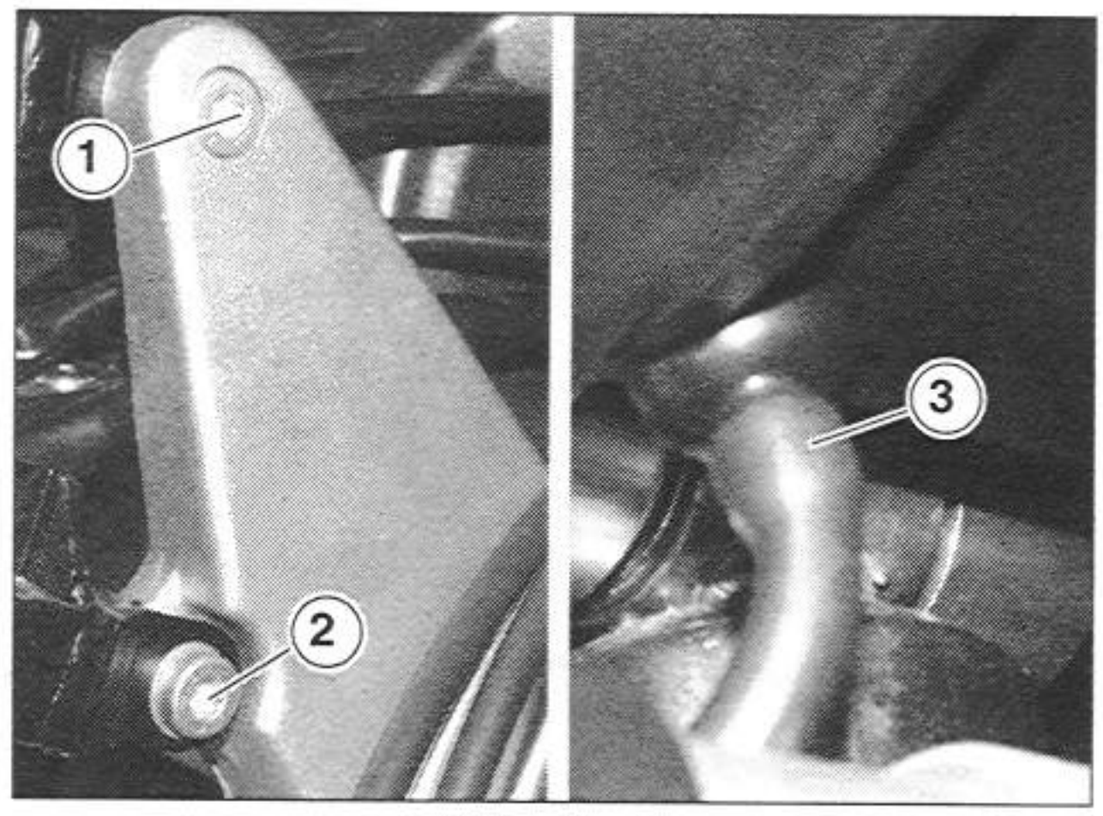

WARNING

When reassembling, make sure the drain tube (3) is fitted properly.

- Raise the rear housing.
- Working from the left side of the vehicle, loosen and remove the nut (4) and push the screw (5) partially out.

NOTE Replace the nut (4) if you find it to be damaged.

Tightening torque for nut (4): 36 ftlb (50 Nm).

- Remove the screw (5) from the opposite side.
- Working from the right side of the vehicle, loosen and remove the nut (6).

Tightening torque for nut (6): 36 ftlb (50 Nm).

- Remove the screw (7) from the opposite side.

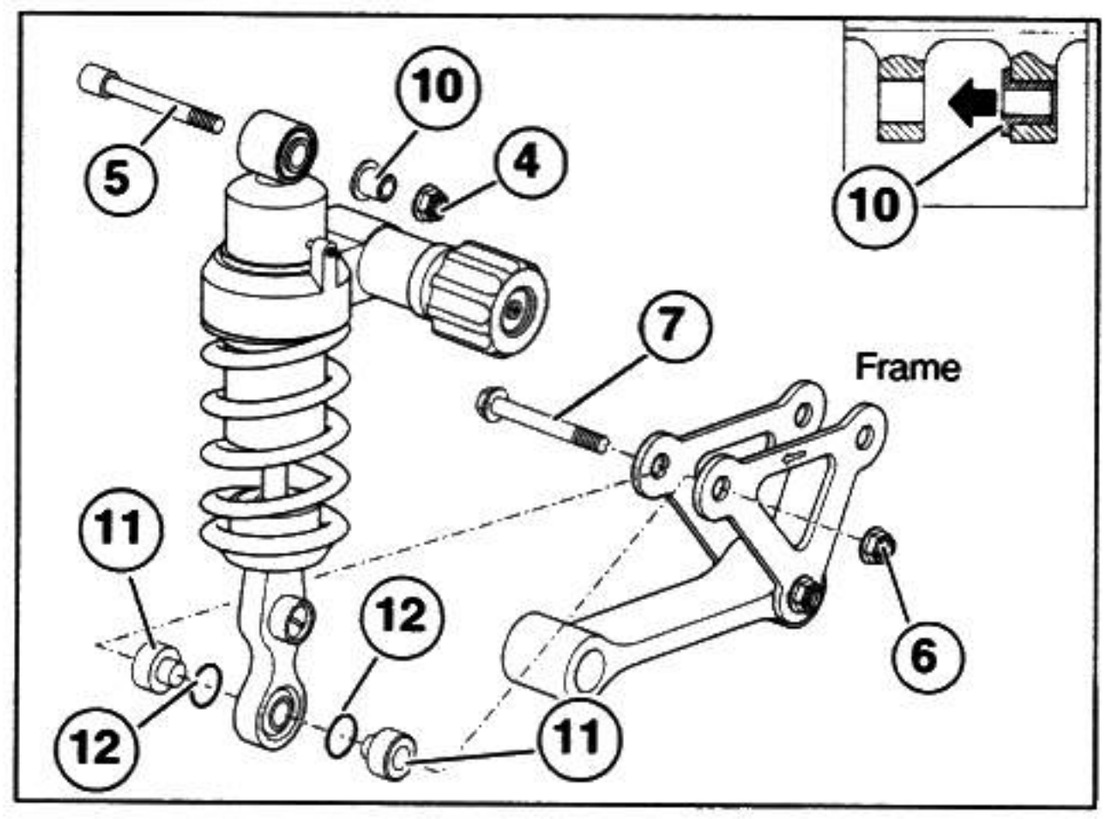

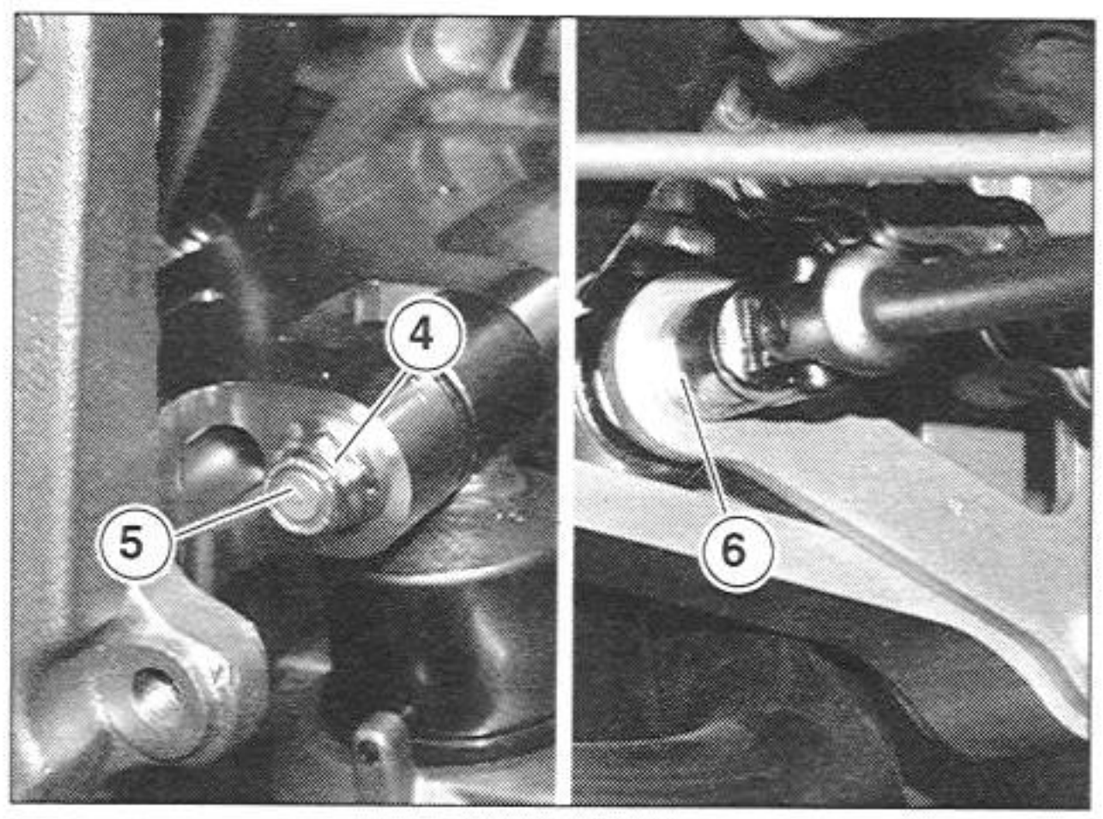

WARNING

The shock absorber contains pressurized nitrogen. In order to avoid the risk of explosion, keep it away from flames and/or sources of heat.
If replacing the shock absorber, discharge the nitrogen by pressing on the valve stem under the valve cap (8).

- Grasp the shock absorber (9) and remove it by pulling it up and at the same time rotating it backwards.
- Push the shim (10) inward on the upper attachment clevis of the shock absorber.
- Slide the two bushings (11) and the two O-rings (12) onto the lower attachment clevis.

NOTE Wash all components with clean solvent.

- Check the components, see 7.10.4 (CHECKING THE COMPONENTS).

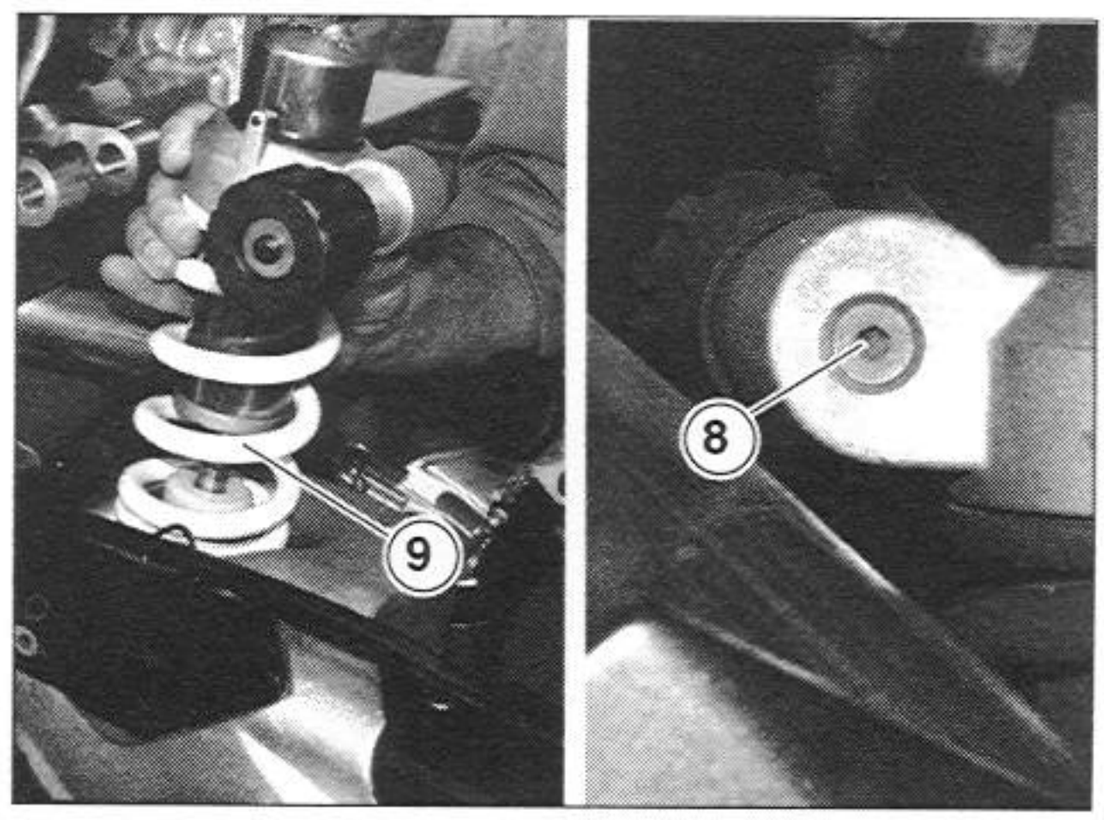

7.10.2 DISASSEMBLING THE REAR SUSPENSION LINKAGE

Carefully read 1.3.9 (PRECAUTIONS AND GENERAL INFORMATION) and 2.31.1 (REAR SUSPENSION).

- Remove both the lower fairings, see 7.1.33 (REMOVING THE LOWER FAIRING).
- Working from the right side of the vehicle, loosen and remove the nut (1).

Tightening torque for nut (1): 36 ftlb (50 Nm).

- Remove the screw (2) from the opposite side.
- Loosen and remove the nut (3).

Tightening torque for nut (3): 36 ftlb (50 Nm).

- Remove the screw (4) from the opposite side.
- Loosen and remove the nut (5).

Tightening torque for nut (5): 36 ftlb (50 Nm).

- Remove the screw (6) from the opposite side.
- Remove the complete suspension linkage assembly (7).

NOTE When reassembling, grease the linkage pivot points, see 1.12 (LUBRICANT CHART). Be extremely careful that all parts are correctly positioned, and check several times that all joints move smoothly.

- Perform a thorough inspection after reassembly, see 2.31.3 (CHECKING THE REAR SUSPENSION LINKAGE).

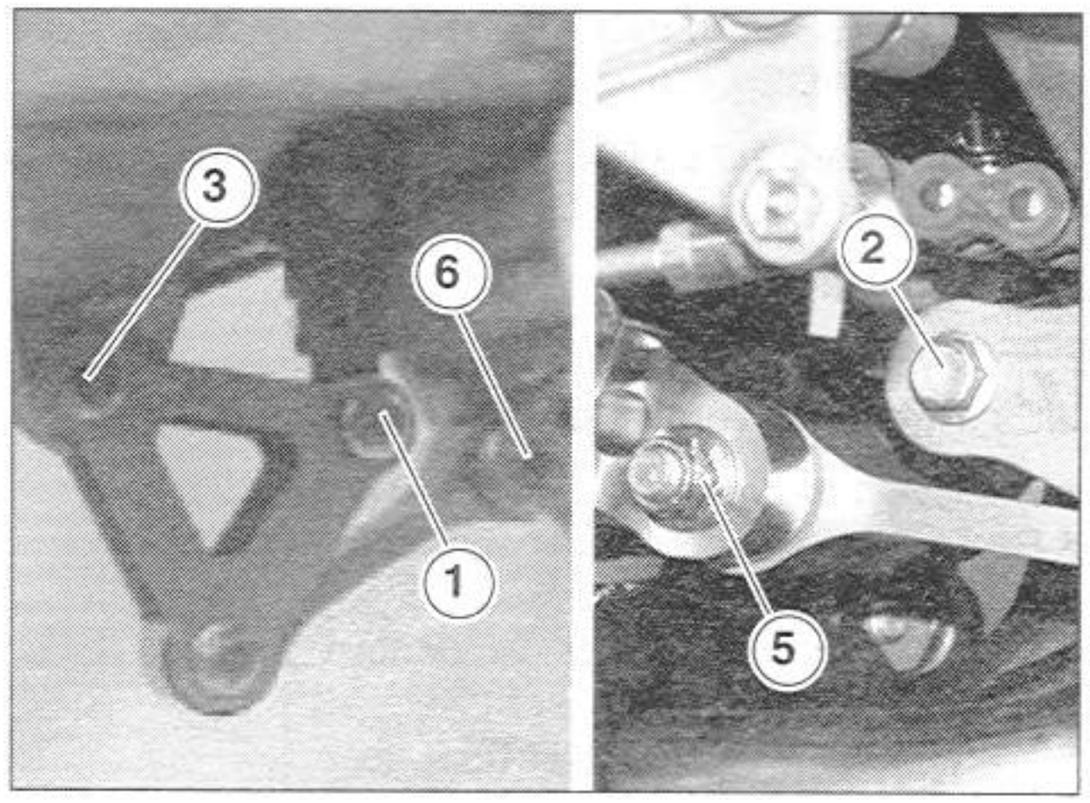

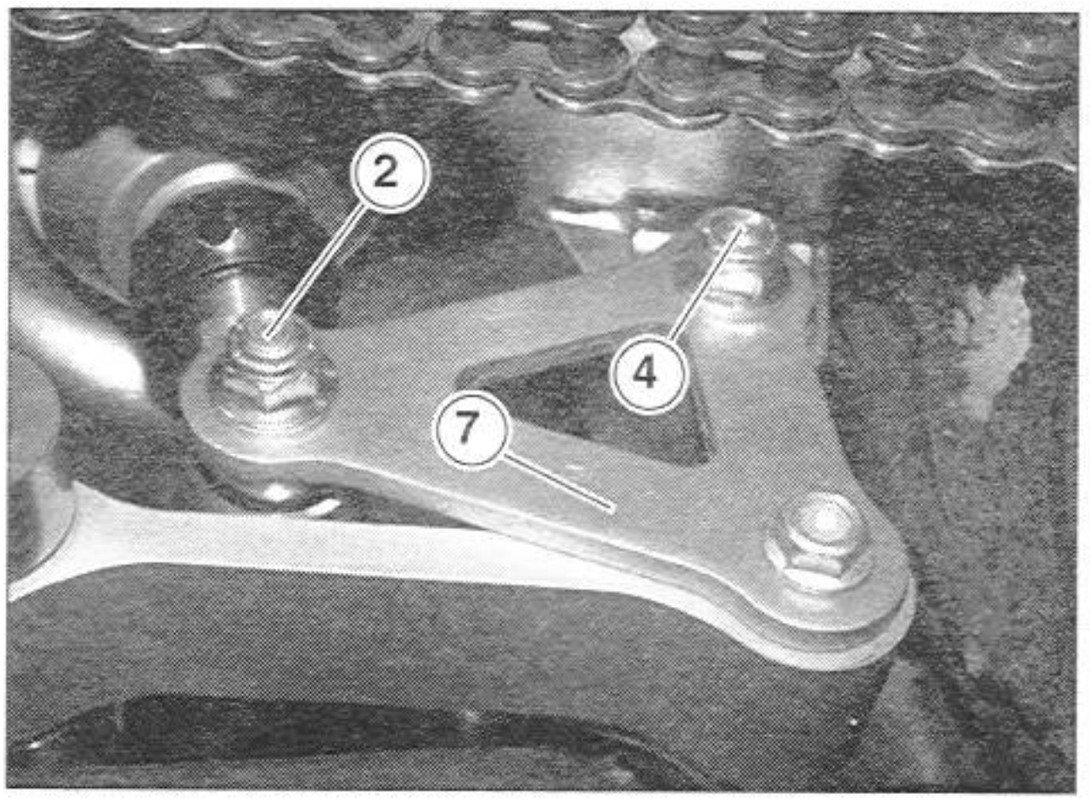

7.10.3 DISASSEMBLING THE SUSPENSION LINKAGE

Carefully read 1.3.9 (PRECAUTIONS AND GENERAL INFORMATION).

- Loosen and remove the nut (1).

Tightening torque for nut (1): 36 ftlb (50 Nm).

- Remove the screw (2).
- Remove the two double connecting rods (3-4).
- Remove the two seals gaskets (5).
- Use a special extractor to remove the two roller bearings (6).
- Retrieve the internal spacer (7).
- Remove the two seals gaskets (8).
- Remove the internal spacer (9).
- Use a special extractor to remove the two roller bearings (10).

NOTE Wash all components with clean solvent.

NOTE During reassembly, couple the single connecting rod (11) to the double connecting rods (3-4) as shown in the figure; the arrow on the top side must be facing the direction in which the vehicle travels.

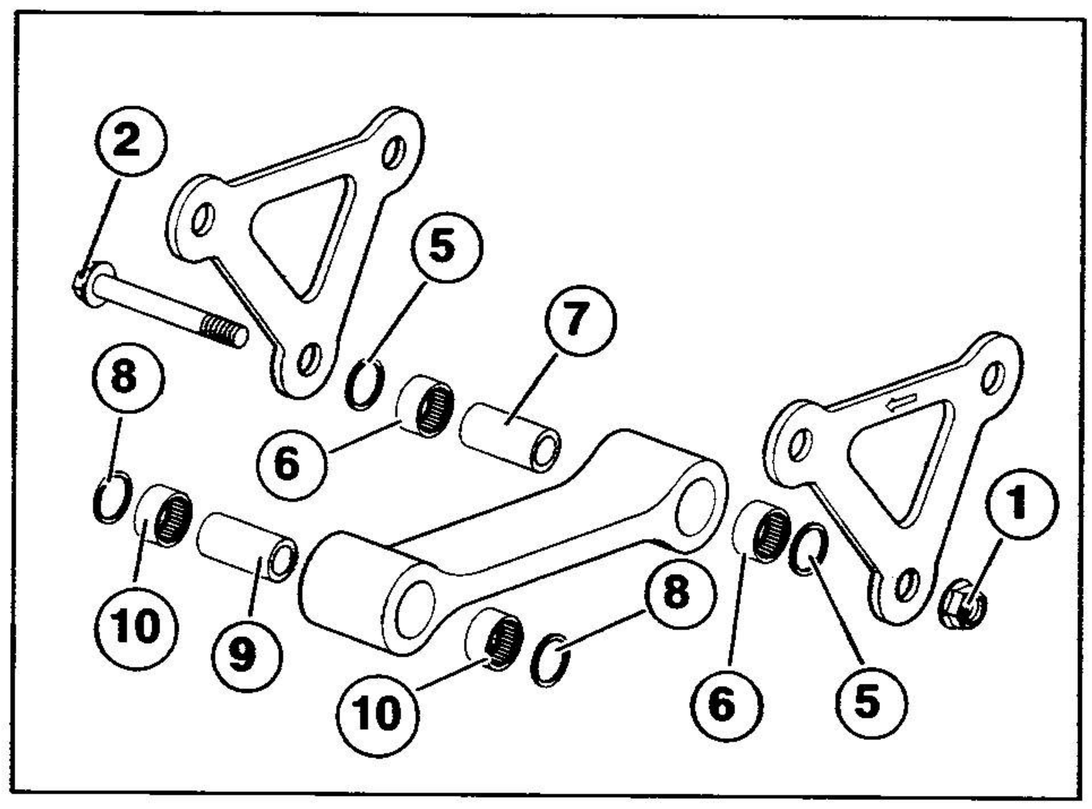

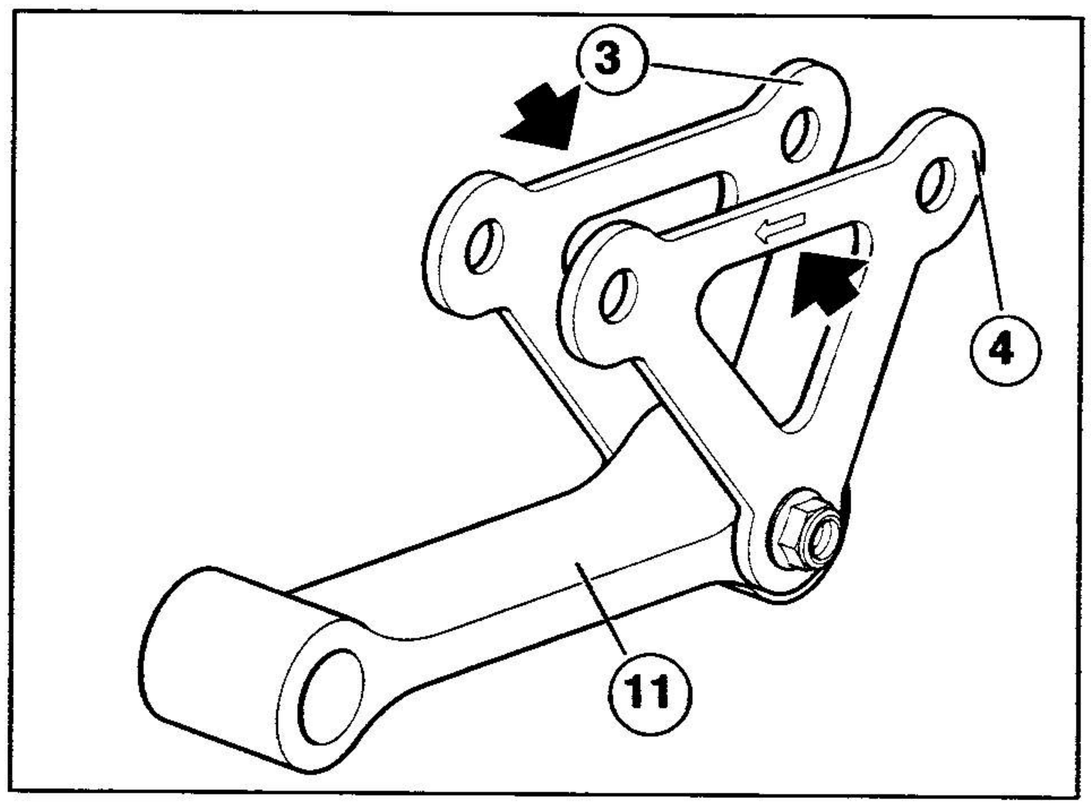

7.10.4 CHECKING THE COMPONENTS

⚠ WARNING

Make sure that none of the components are visibly bent, broken, cracked and /or dented.
Replace any damaged components.

BEARINGS

- Manually turn the rollers, which should turn smoothly and quietly.
  There should be no axial clearance.
  Any bearings found to have these faults must be replaced.

⚠ WARNING

Apply grease to the rollers, see 1.6 (LUBRICANT CHART).

GASKETS

- Make sure the gaskets are intact; replaced if damaged or excessively worn.

SHOCK ABSORBER

- Make sure there are no oil leaks in the shock absorber, and that its stroke is smooth and progressive.
  If not, replace.

⚠ DANGER

The shock absorber contains pressurized nitrogen. In order to avoid the risk of explosion, keep it away from flames and/or sources of heat.
If replacing the shock absorber, discharge the nitrogen by pressing on the valve stem under the valve cap (1).

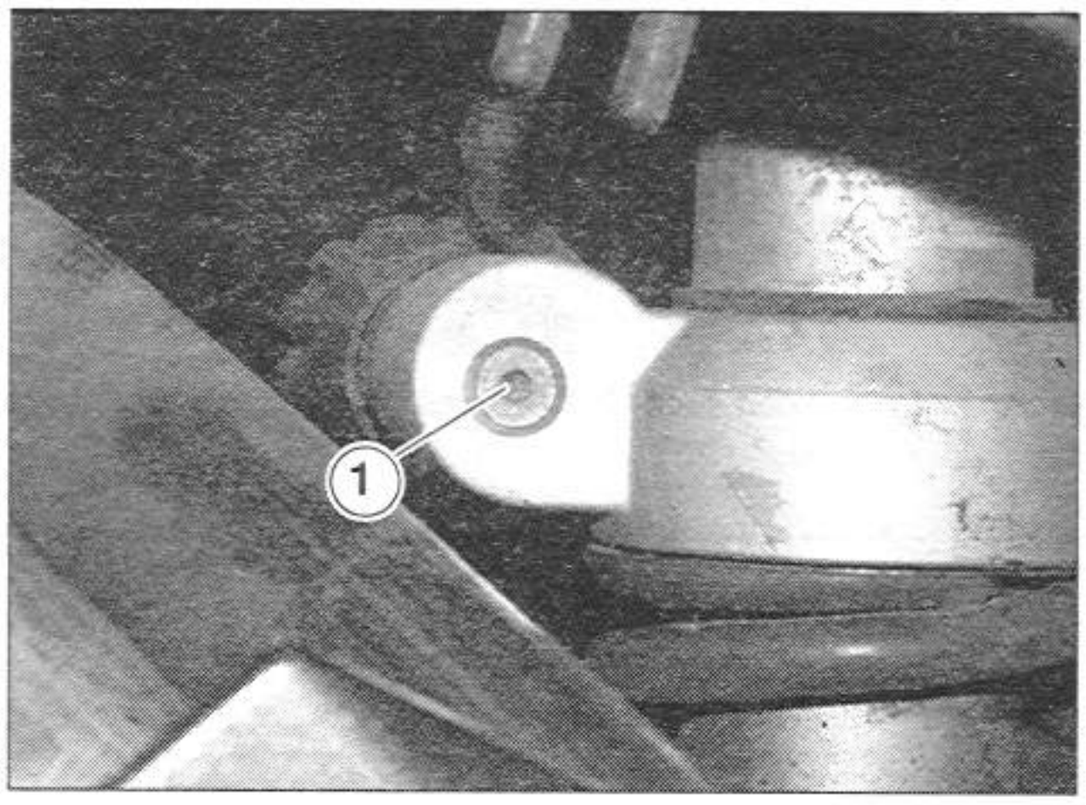

7.11 DISASSEMBLING THE DRIVE CHAIN

7.11.1 CHAIN BREAKER/RIVET TOOL

NOTE This tool (code 8140192) is designed for breaking/riveting chains with rivet-type links.

⚠ WARNING

Only chains with rivet-type links should be installed on this vehicle.

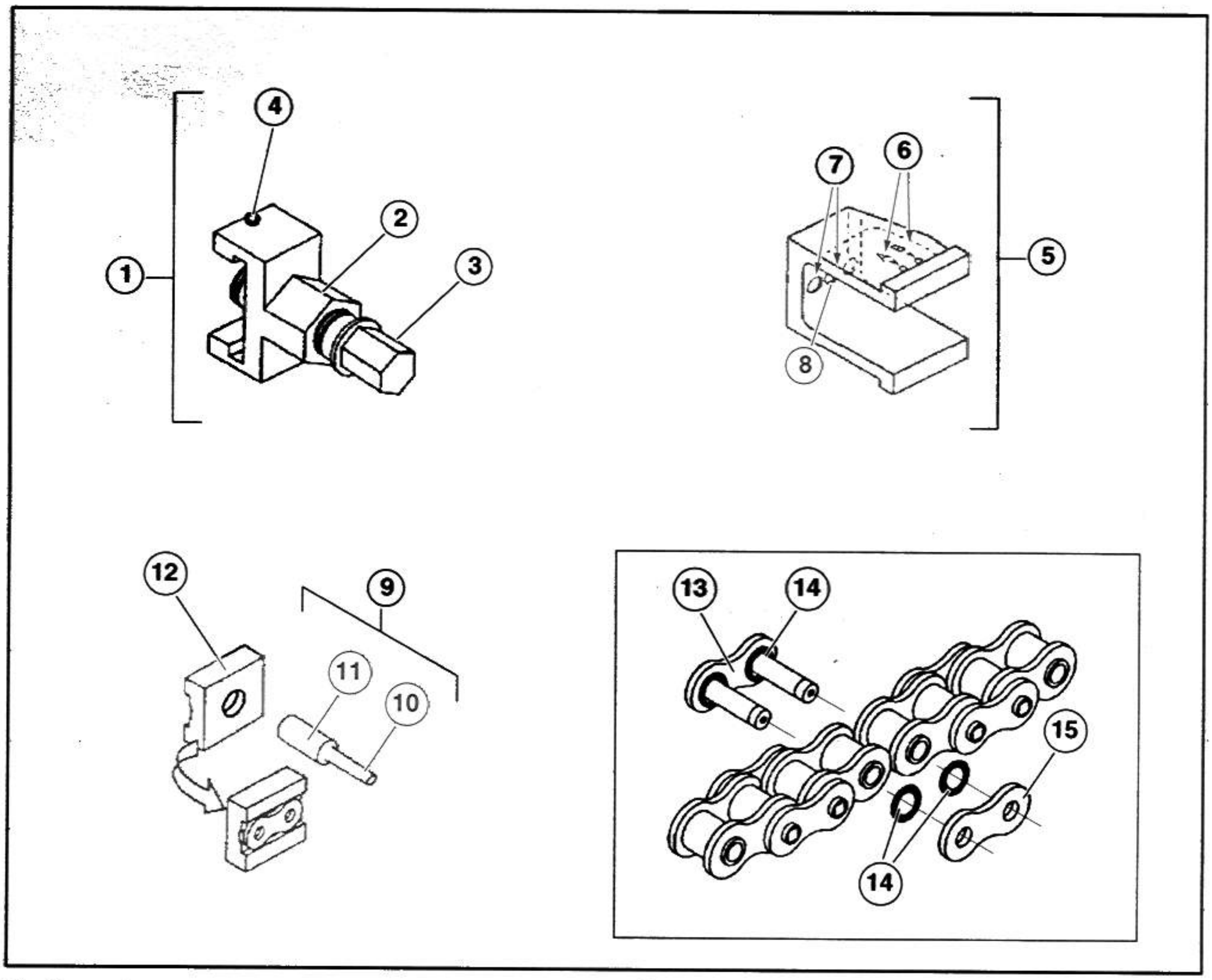

Tool legend:

1) Main body
2) Tied hexagonal boss (for 27-mm wrench)
3) Hex-head screw (for 19-mm wrench)
4) Locating dowel
5) Rivet tool
6) "A" and "B" reference marking
7) Location holes for joining pins
8) Pin exit hole
9) Pusher
10) Breaking side
11) Joining side
12) Support plate

Chain legend:

13) Master plate
14) O-rings
15) Rivet plate

7.11.2 BREAKING THE CHAIN

Carefully read 1.3.9 (PRECAUTIONS AND GENERAL INFORMATION) and 2.35 (DRIVE CHAIN).

- Remove the countershaft sprocket case, see 2.35.4 (INSPECTING THE DRIVE CHAIN GUIDE PLATE).
- Loosen the chain tension, see 2.35.3 (ADJUSTING THE DRIVE CHAIN).

NOTE Make sure that the tool is suited to the type of chain installed on the vehicle and the size of the chain's links.

- Place the rivet tool (1) on the lower segment of the chain, at a point between the front and rear sprocket.
- Move the rivet tool (1) to align the central pin exit hole with the chain pin to be pushed out.
- Insert the largest diameter of the pusher (2) inside the main body(3).
- Fit the main body (3) on the rivet tool (1).
- Move the main body (3) so that the locating dowel (4) is in line with mark "A" on the rivet tool (1).
- Turn the screw (5) by hand until the pusher (2) touches the pin to be pushed out.

NOTE Make sure that the pusher (2) is perfectly aligned with the pin to be pushed out.

- Use a 27-mm wrench over the tied hexagonal boss on the central body (3) to hold the body in place.
- Use a 19-mm wrench to turn the screw (5) until it pushes the chain pin all the way out.
- Loosen the screw (5).
- Repeat the above procedure on the adjacent pin on the same link.
- Remove the components of the disconnected link and the four O-rings.
- Remove the chain.

⚠ WARNING

If the chain is worn beyond its useful service life, replace the entire assembly (countershaft sprocket, rear sprocket and chain), see 7.4.1 (REMOVING THE FINAL DRIVE ASSEMBLY).

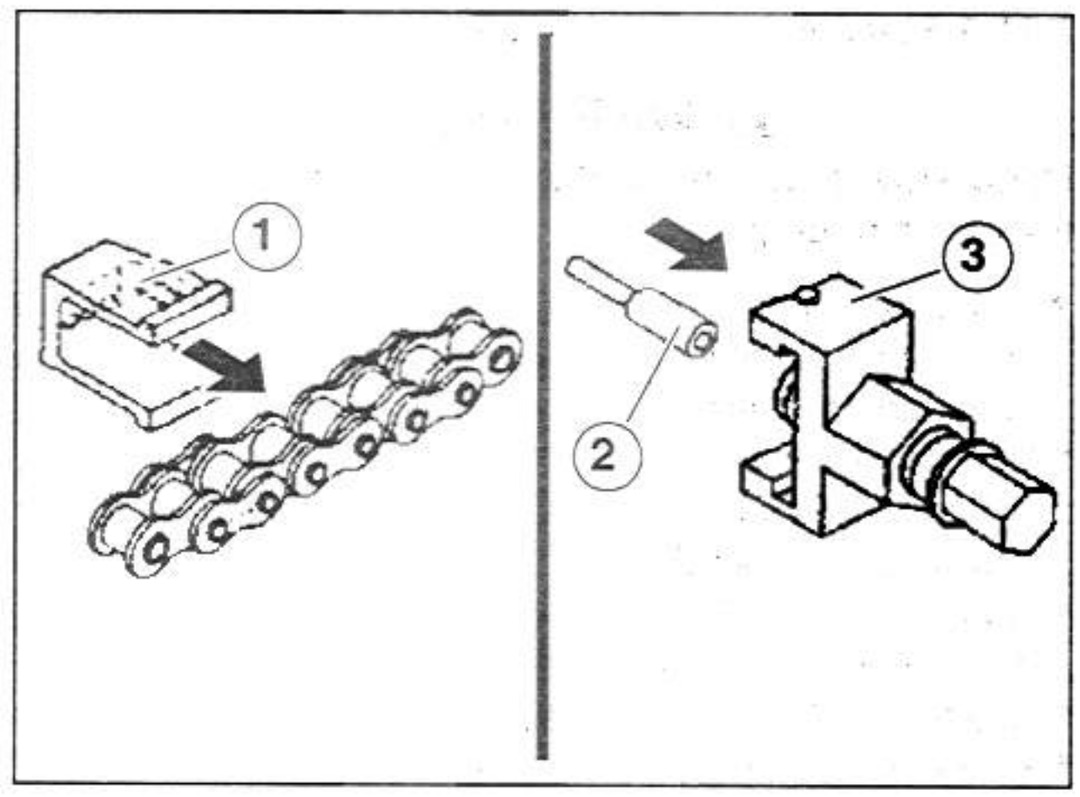

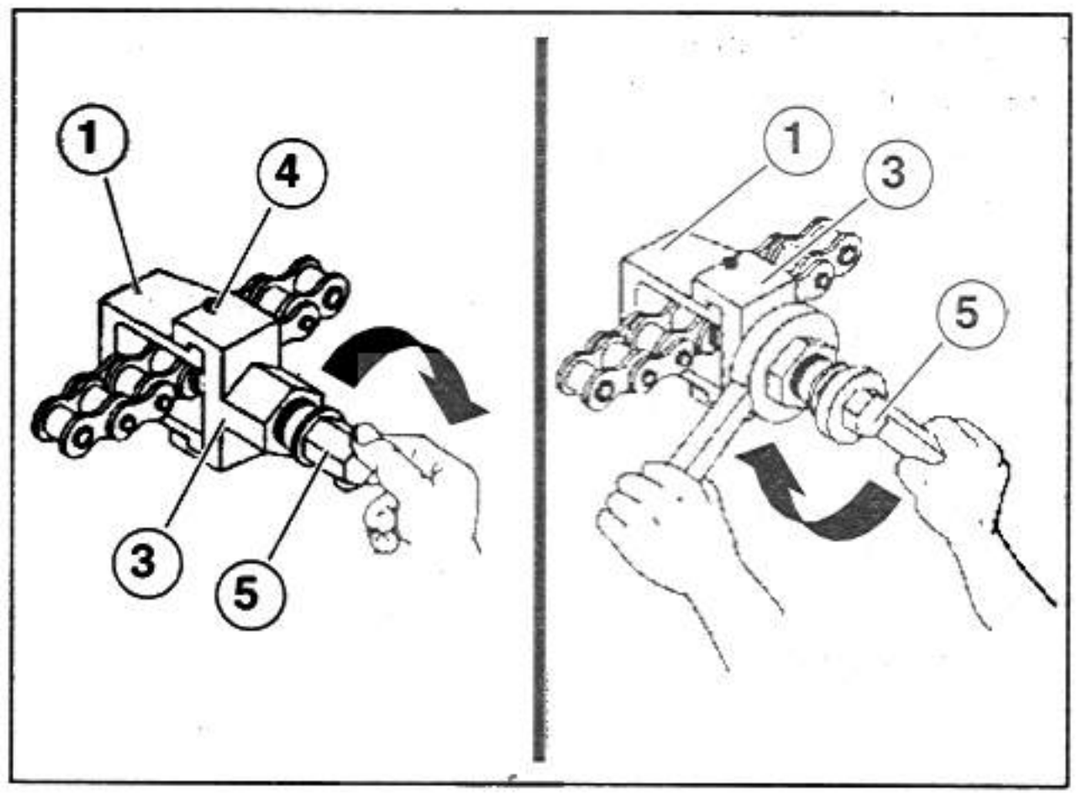

7.11.3 PLACING THE MASTER LINK

⚠ WARNING

Make sure that the master link is the same type as the chain to be joined.

- Place the chain on the vehicle with the two ends to be joined at a point between the front and rear sprockets of the chain's lower run.
- lace one O-ring on each of the pins of the master link. Grease the two pins on the master link, see 1.12 (LUBRICANT CHART).
- Join the two ends of the chain and insert master link pins. Insert an O-ring on the tip of each pin.
- Slip the rivet plate over the pins.
- Fit the support plate (6) on the rivet plate.
- Fit the rivet tool (1) onto the chain.
- Move the rivet tool (1) so that its side holes match the heads of the pins on the joining plate.
- Insert the smallest diameter of the pusher (2) into the main body (3).
- Fit the main body (3) on the rivet tool (1).
- Move the main body (3) so that the locating dowel (4) is in line with mark "A".
- Turn the screw (5) by hand until the pusher (2) touches the support plate (6).
- Hold the central body (3) stationary using a 1.06 in (27 mm) wrench over the tied hexagonal boss.
- Turn the screw (5) in as far as it will go, using a 0.74 in (19-mm) wrench.

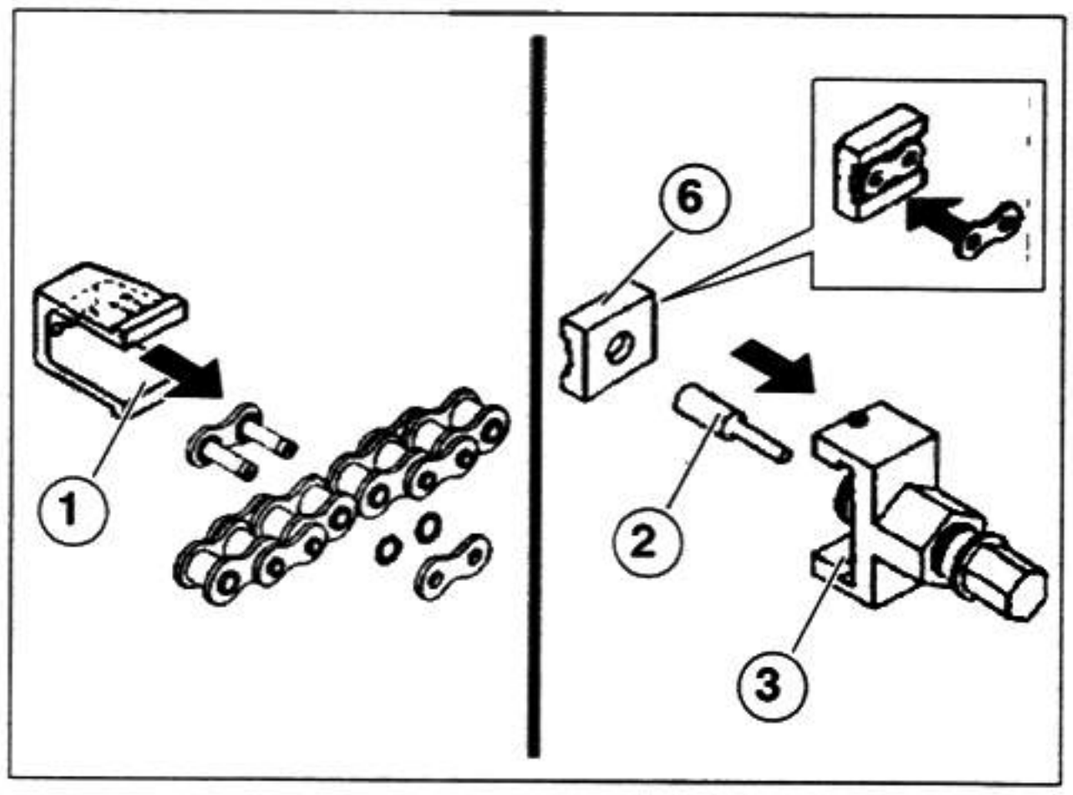

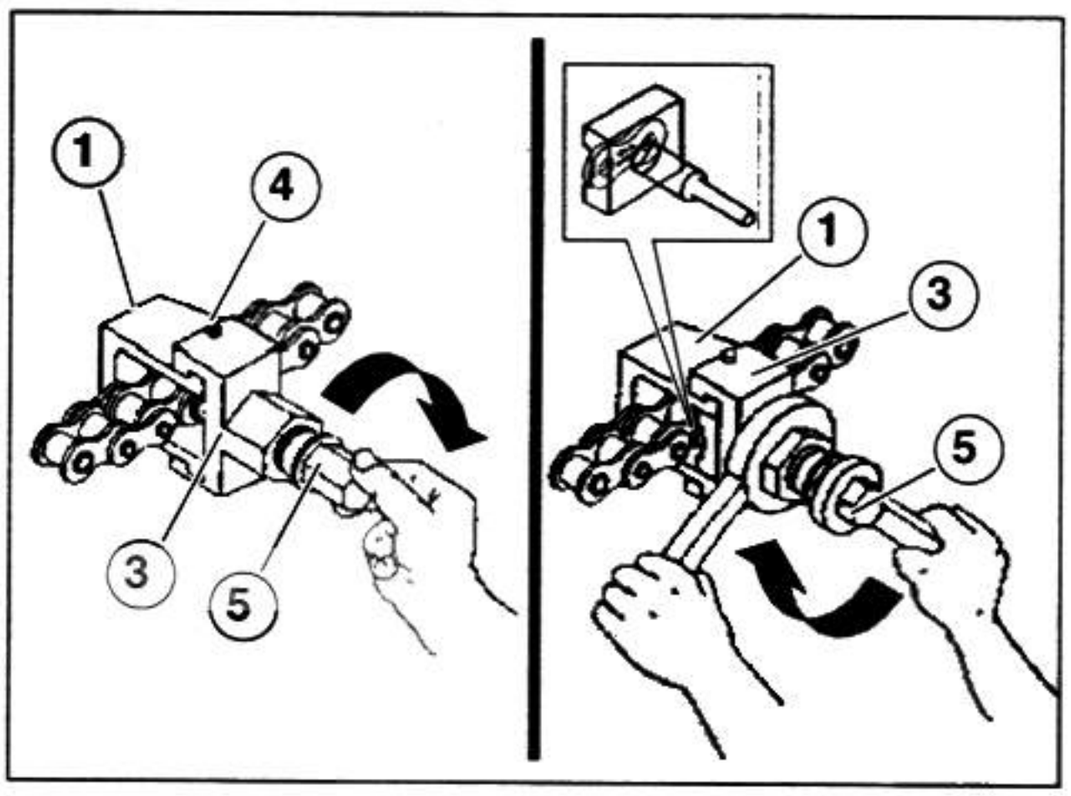

7.11.4 RIVETING THE PINS

With the tool already in place on the chain:

- Loosen the screw (1).
- Remove the main body (2) from the rivet tool (3).
- Remove the support plate (4).
- Refit the main body (2) on the rivet tool (3).
- Move the main body (2) so that the locating dowel (5) is in line with mark "B" on the rivet tool (3).
- Turn the screw (1) by hand until the pusher (6) touches the pin to be riveted.

NOTE Make sure that the pusher (6) is perfectly aligned with the pin to be riveted.

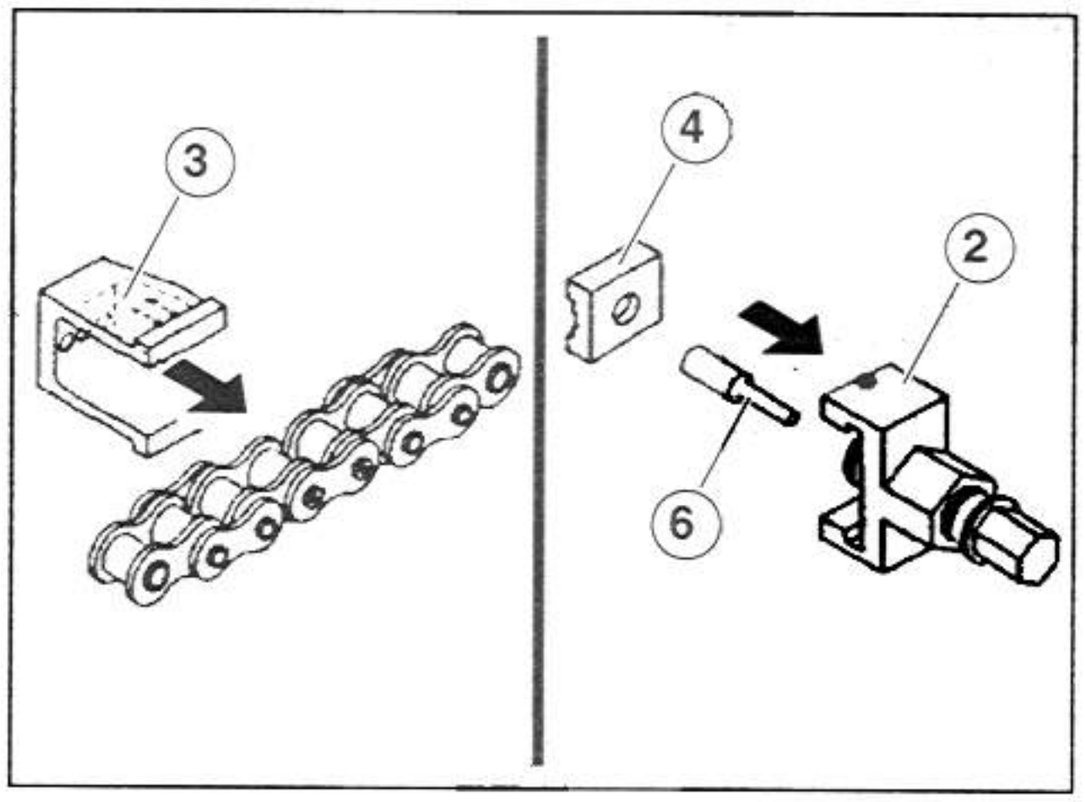

⚠ WARNING

Wear safety goggles or a shield to protect your eyes.

- Hold the central body (2) stationary using a 1.06 in (27-mm) wrench over the tied hexagonal boss.
- Use a 0.74 in (19-mm) wrench to turn the screw (1) until the edge of the pin has been riveted.

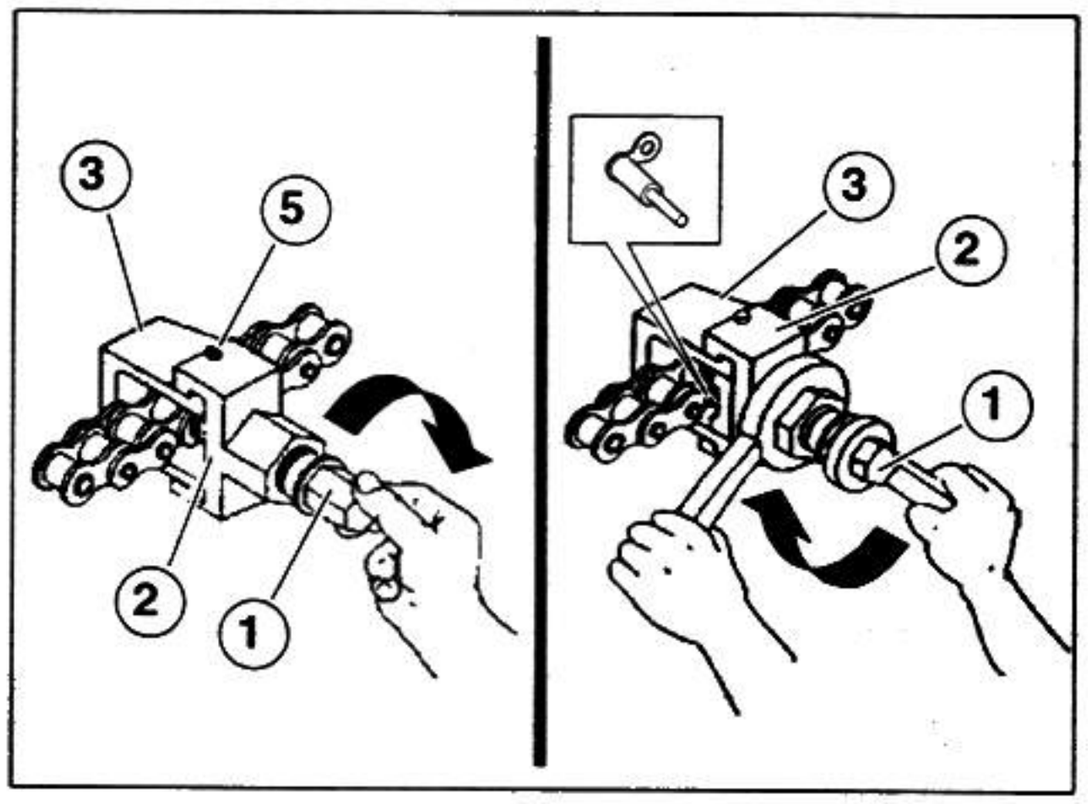

⚠ WARNING

Make sure that the pin has been riveted correctly; the riveted edge of the pin must be evenly in contact with the rivet plate all the way around, and its maximum diameter must be 0.22 ± 0.005 in (5.65 ± 0.15 mm).

- Loosen the screw (1).
- Repeat the above procedure on the adjacent pin on the same link.

NOTES

GENERAL INFORMATION

8

GENERAL INFORMATION

TABLE OF CONTENTS

8.1 TROUBLESHOOTING 8-3-00
8.1.1 ENGINE..... 8-3-00
8.1.2 ELECTRICAL SYSTEM..... 8-8-00
8.1.3 BATTERY 8-8-00
8.1.4 BRAKES 8-9-00
8.1.5 CHASSIS 8-9-00

8.2 LOCATION, FASTENING, AND ROUTING OF WIRING, CABLES AND LINES.. 8-11-00
8.2.1 FRONT BRAKE LINES..... 8-11-00
8.2.2 REAR BRAKE LINES..... 8-11-00
8.2.3 FUEL SYSTEM LINES..... 8-12-00
8.2.4 CLUTCH CONTROL LINE..... 8-13-00
8.2.5 PPC DEVICE PRESSURE LINES 8-13-00
8.2.6 COOLING SYSTEM LINES 8-14-00
8.2.7 ENGINE OIL LINES 8-16-00
8.2.8 BREATHER AND OVERFLOW DRAINAGE LINES..... 8-17-00
8.2.9 THROTTLE CONTROL CABLES..... 8-18-00
8.2.10 ELECTRICAL CABLES..... 8-19-00

8.3 CHECKING THE ELECTRICAL SYSTEM..... 8-24-00
8.3.1 SPARK PLUGS (NO SPARK)..... 8-24-00
8.3.2 BATTERY RECHARGING PROBLEMS 8-24-00
8.3.3 PROBLEMS WITH IGNITION AND/OR STARTING..... 8-24-00
8.3.4 PROBLEMS WITH AUXILIARY SYSTEMS 8-24-00

8.4 CHECKING THE ELECTRICAL SYSTEM..... 8-25-00
8.4.1 ENGINE..... 8-25-00
8.4.2 THROTTLE BODY COMPONENTS.... 8-25-00
8.4.3 FUEL SYSTEM 8-25-00
8.4.4 ELECTRICAL SYSTEM..... 8-25-00
8.4.5 FRONT BRAKE SYSTEM 8-25-00
8.4.6 REAR BRAKE SYSTEM..... 8-25-00
8.4.7 COOLING SYSTEM..... 8-25-00
8.4.8 WHEELS..... 8-25-00
8.4.9 FRONT SUSPENSION 8-25-00
8.4.10 REAR SUSPENSION..... 8-25-00
8.4.11 STEERING..... 8-25-00
8.4.12 CAPACITY - FLUID PROPERTIES..... 8-25-00
8.4.13 STRUCTURE (FRAME/SADDLE SUPPORT/DASHBOARD MOUNT).... 8-25-00

8.1 TROUBLESHOOTING

⚠ WARNING

Any faults with the ignition coils, crankshaft position sensor, camshaft sensor, pressure sensors and THERMISTORS are automatically detected by the electronic control unit and reported on the multifunction display with the flashing message "EFI".

For this reason, the malfunctions of these components are not repeated in the troubleshooting table; see the corresponding chapters in sect. 4 (FUEL SYSTEM) and sect. 6 (ELECTRICAL SYSTEM).

NOTE In the table below, all operations marked (*) must be carried out with reference to the Engine Service Manual, see 0.4.1 (ENGINE SERVICE MANUAL).

8.1.1 ENGINE

DEFECT	SYMPTOM AND POSSIBLE CAUSES	REMEDY
The engine is difficult or impossible to start	Engine stop switch set to ⊗	Set to position ○
	Starting safety logic faulty	Check and restore the necessary conditions
	Overturn sensor faulty	Replace
	Vent hole on tank cap clogged	Clean
	Battery charge low	Recharge
	Battery damaged	Replace
	Sprag clutch, sprag clutch gear worn or faulty	Replace (*)
	Double gear or intermediate gear of the starter motor worn or faulty	Replace (*)
	Starter motor pinion teeth damaged	Replace (*)
	Spark plugs dirty	Replace
	Spark plugs wet	Clean or replace
	Spark plugs loose	Tighten
	Spark plugs not to spec	Replace
	Fuel filters dirty or fuel system line clogged	Clean or replace
	Fuel pump, relay or wiring faulty	Replace
	Fuel pressure regulator faulty	Replace
	Injectors faulty	Replace
	Valve clearance incorrect	Adjust (*)

CONT'D ➤

DEFECT	SYMPTOM AND POSSIBLE CAUSES	REMEDY
The engine does not idle smoothly	Idle rpm too slow	Adjust
	Air filter dirty	Clean
	Intake manifold leaking	Replace
	Both cylinders poorly synchronized	Synchronize the cylinders
	Throttle valve shaft/housing worn	Replace
	See the subsection entitled "Engine difficult or impossible to start" for other possible causes	
The engine runs irregularly at higher speeds	The fuel outlet fitting is dirty, limiting the flow of fuel to the injector	Clean and top up the fuel system
	Intake ducts and lines clogged	Check
	Air leaking through the throttle body or intake manifold	Replace
	Fuel pressure too low	Clean the fuel system or replace the pump
	Faulty fuel pump	Replace
	Camshafts worn	Replace (*)
	See the subsection entitled "Engine difficult or impossible to start" for other possible causes	
Engine lacks power	Spark plugs dirty	Clean or replace
	Spark plugs not to spec	Replace
	Insufficient valve clearance	Adjust (*)
	Exhaust system faulty	Replace
	Valve timing incorrect	Adjust (*)
	Valve springs faulty	Replace (*)
	Valve seats leaking	Reface seat (*)
	Intake coupling or intake system leaking	Replace
	Clutch slippage	Replace the clutch discs and springs (*)
	Motor oil does not meet specifications	Use motor oil that meets specifications
	Air filter dirty	Replace
	Faulty fuel pump	Replace
	Fuel pressure too low	Replace the fuel pressure regulator or check the pump
	Injector dirty	Replace
	Piston rings worn	Replace (*)

CONT'D ➤

DEFECT	SYMPTOM AND POSSIBLE CAUSES	REMEDY
The engine overheats	Insufficient coolant in the cooling system, system leaking	Top up with coolant, subject the system to a pressure test
	Coolant does not meet specifications	Use coolant that meets specifications
	Radiator dirty or coolant hose clogged	Clean
	Air in the cooling system	Bleed
	Cooling fan motor faulty	Repair or replace
	Coolant pump or coolant pump control drive faulty	Replace (*)
	Not enough oil in the system	Top up with motor oil
	Oil pump or oil pump control faulty, or oil circuit clogged	Replace or clean (*)
	Motor oil does not meet specifications	Use motor oil that meets specifications
	Intake coupling or intake system leaking	Replace
	Faulty injector	Replace
	Faulty head gasket	Replace (*)
The engine produces excessive exhaust fumes (blue smoke)	Clutch diaphragm leaking	Replace (*)
	Valve stem gaskets worn	Replace (*)
	Valve stems or valve guides worn	Replace (*)
	Scratches or grooves on the cylinder wall	Replace (*)
	Piston rings or cylinder worn	Replace (*)
	Head gasket leaking	Replace (*)
The engine vibrates	Engine fastening loose	Tighten
	Bearing or bearing housing worn	Replace
	Incorrect balanceshaft timing	Adjust (*)
Engine oil pressure too low (LED lights)	Not enough oil in the system	Top up with motor oil
	Oil does not meet specifications	Replace
	Faulty oil pressure sensor	Replace (*)
	Oil pressure regulating valve clogged or faulty (the valve remains open)	Clean or replace (*)
	Faulty oil pump control	Replace (*)

CONT'D ➤

DEFECT	SYMPTOM AND POSSIBLE CAUSES	REMEDY
The engine makes too much noise	The noise seems to come from the timing system	
	Chain tightener shoe worn	Replace (*)
	Too much valve clearance	Adjust (*)
	Valve springs worn out or broken	Replace (*)
	Valve lifter buckets or camshaft worn	Replace (*)
	Timing chain worn	Replace (*)
	Timing gears worn	Replace (*)
	Faulty timing chain tightener	Replace (*)
	The noise seems to come from the piston	
	Gudgeon pin, bore or connecting rod worn	Replace (*)
	Piston rings or grooves worn or broken	Replace (*)
	The noise seems to come from the clutch or clutch case	
	Clutch discs worn	Replace (*)
	Clutch housing worn	Replace (*)
	Flexible couplings on clutch housing have excessive play	Replace (*)
	Noise with the clutch engaged, ball bearings in the support plate faulty	Replace (*)
	Primary transmission worn or broken	Replace (*)
	The noise seems to come from the flywheel case	
	Timing gears worn or broken	Replace (*)
	The noise seems to come from the crank gear	
	Connecting rod bearings worn	Replace (*)
	Crankshaft bushings or balanceshaft bearings worn	Replace (*)
	The noise seems to come from the gearbox	
	Gears or gearbox shafts worn or broken	Replace (*)
	Primary gear worn	Replace (*)
	Gearbox bearings worn	Replace (*)
	The noise is heard when the engine is started	
	Sprag clutch gear, gear or housing worn or faulty	Replace (*)
	Double gear or intermediate gear of the starter motor worn	Replace (*)
	Starter pinion teeth worn	Replace (*)
The clutch "slips"	Clutch discs worn or warped	Replace (*)
	Clutch springs worn out	Replace (*)
	Support plate worn or warped	Replace (*)
	Motor oil does not meet specifications	Use motor oil that meets specifications
	Clutch control hydraulic system faulty	Replace

CONT'D ➤

DEFECT	SYMPTOM AND POSSIBLE CAUSES	REMEDY
The clutch does not disengage	Clutch fluid reservoir level	Check
	Motor oil does not meet specifications	Use motor oil that meets specifications
	Clutch discs stuck together	Clean or replace (*)
	Clutch discs or support plate warped	Replace (*)
	Clutch control hydraulic system faulty	Replace
	Clutch housing worn	Replace (*)
The clutch sticks during engagement	Clutch discs worn or warped	Replace (*)
	Clutch disc guide grooves inside clutch housing worn	Replace the clutch housing (*)
	Disc guide grooves in clutch disc hub worn smooth	Replace the disc hub (*)
	Thrust-bearing lands of the clutch housing or support plate worn	Replace (*)
The gearbox does not engage, or has trouble engaging	Dogs and recesses in the various gears worn	Replace (*)
	Transmission shafts worn	Replace (*)
	Selector shaft gearshift mechanism faulty	Repair or replace (*)
	The gearshift forks are worn or bent	Replace (*)
	For other possible causes see the subsection entitled (The clutch does not disengage)	
The gears disengage during start-up or hard acceleration	Gearbox gears worn	Replace (*)
	The gearshift forks are worn or bent	Replace (*)
	Detent springs worn out or broken	Replace (*)
	Gears do not change smoothly or completely; the gearshift is bent or incorrectly adjusted.	Always press the pedal all the way down when shifting gears; replace the gearshift (*)
Spark plugs overheated, burnt out or dirty	Spark plugs not to spec	Replace
	Spark plugs loose	Tighten
	Intake coupling or intake system leaking	Replace
	Fuel intake system faulty	Repair or replace
The battery alternator is not charged or is charged incorrectly	Faulty battery	Replace the battery
	Voltage regulator faulty	Replace
	Open, short circuit, or grounding of alternator windings	Replace
	Cables broken or short-circuited, or loose connections	Repair, replace or tighten

8.1.2 ELECTRICAL SYSTEM

DEFECT	SYMPTOM AND POSSIBLE CAUSES	REMEDY
The spark plugs are soiled immediately with carbon deposits	Incorrect engine oil level	Check
	Unsuitable fuel	Use the recommended fuel
	Air filter dirty	Clean
The spark plugs get dirty too soon	Incorrect engine oil level	Check
	Piston rings worn	Replace (*)
	Piston or cylinder worn	Replace (*)
Spark plug electrodes overheated or burnt	The engine overheats	Adjust
	Loose spark plugs	Tighten
The alternator does not charge	Connection terminals open, short-circuited, or loose	Repair, replace or tighten
	Alternator coils short-circuited, grounded or broken	Replace
	Regulator/rectifier short-circuited or faulty	Replace
The alternator charges but the current intensity is below the prescribed value	The terminals tend to short-circuit, break or spread apart	Repair or tighten
	Alternator stator coils grounded or broken	Replace
	Regulator/rectifier faulty	Replace
	Faulty battery	Replace
The alternator charges too much	Short-circuit in the battery	Repair or replace
	Regulator/rectifier damaged or faulty	Replace
	Intermittent grounding of the regulator/rectifier	Replace
Charge not constant	Terminal insulation worn due to vibrations, with consequent temporary short circuits	Repair or replace
	Alternator contains short circuits	Replace (*)
	Regulator/rectifier faulty	Replace

8.1.3 BATTERY

DEFECT	SYMPTOM AND POSSIBLE CAUSES	REMEDY
The battery runs down too quickly	Faulty recharging system	Check the alternator, the regulator/rectifier, the circuit connections and carry out the appropriate steps to proper recharging
	Battery elements have lost much of their active material due to excessive charging	Replace the battery and repair the charging system
	There are short circuits inside the battery due to excess sediment build-up	Replace the battery
	Dead battery	Replace the battery
Battery polarity reversed	The battery has been hooked up to the system incorrectly	Replace the battery and make sure it is hooked up correctly

8.1.4 BRAKES

DEFECT	SYMPTOM AND POSSIBLE CAUSES	REMEDY
Weak braking power	Brake fluid leak from the hydraulic system	Repair or replace
	Worn pads	Replace the pads
	Pad contact surfaces dirty with oil, grease or brake fluid	Replace the pads
	Worn brake discs	Replace the disc
	Air in the hydraulic circuit	Bleed the circuit
	Brake discs dirty with oil, grease or brake fluid	Clean
	Foreign matter in the brake fluid	Change the brake fluid
	Brake master cylinder return hole clogged	Disassemble and clean the brake master cylinder
The brakes squeal	Brake pad contact surfaces glazed	Restore surfaces with sandpaper
	Pads mounted incorrectly	Install correctly
	Wheel bearing damaged	Replace
	Loose front or rear wheel axle nut	Torque to specifications
	Worn pads	Replace
Excessive brake lever stroke	Air in the hydraulic circuit	Bleed the circuit
	Not enough brake fluid	Replace
	Unsuited brake fluid	Replace
	Brake caliper pistons jammed or stuck	Disassemble and clean
Brake fluid leaking	Connection fittings not tight enough	Torque to specifications
	Cracked lines	Replace
	Master cylinder piston and/or body worn	Replace the master cylinder and/or the body

8.1.5 CHASSIS

DEFECT	SYMPTOM AND POSSIBLE CAUSES	REMEDY
Hard steering	Steering adjustment ring-nut too tight	Adjust
	Steering bearings damaged	Replace
	Steering shaft bent	Replace
	Front tire pressure too low	Adjust
	Steering damper too stiff	Replace
Uneven steering	Steering bearings damaged	Replace
Handlebar oscillates	Unbalanced adjustment of fork tubes	Adjust
	Fork bent	Replace
	Front wheel rim and/or tire bent	Replace
	Front/rear wheel not balanced	Balance

CONT'D ➤

DEFECT	SYMPTOM AND POSSIBLE CAUSES	REMEDY
Front wheel wobbly	Bent wheel rim	Replace
	Worn wheel bearings	Replace
	Tire faulty or wrong type	Replace
	Loose axle nut	Tighten
	Wrong kind of fork oil	Replace
Fork too soft	Incorrectly adjusted	Adjust
	Springs weakened	Replace
	Not enough fork oil	Top up
	Fork oil exhausted	Replace
Fork too rigid	Incorrectly adjusted	Adjust
	Fork oil too viscous	Replace
	Excess oil in the fork	Remove the excess oil
Fork is noisy	Not enough fork oil	Top up
	Suspension fitting screws and nuts loose	Tighten
Rear wheel wobbly	Bent wheel rim	Replace
	Worn wheel bearings	Replace
	Tire faulty or wrong type	Replace
	Worn fork bearings	Replace
	Suspension screws and nuts loose	Replace
	Rear wheel fastening nut loose	Tighten
Rear suspension too soft	Shock absorber spring weakened	Replace
	Incorrectly adjusted setting devices	Adjust
	Oil leak from shock absorber	Replace
	Nitrogen leaking from shock absorber	Replace
Rear suspension too rigid	Incorrectly adjusted setting devices	Adjust
	Shock absorber pivot bent	Replace
	Bent fork	Replace
	Worn fork bearings	Replace
	Worn suspension roller bearings	Replace
Noisy rear suspension	Suspension screws and nuts loose	Tighten
	Worn fork bearings	Replace
	Worn suspension roller bearings	Replace

8.2 LOCATION, FASTENING, AND ROUTING OF WIRING, CABLES AND LINES

8.2.1 FRONT BRAKE LINES

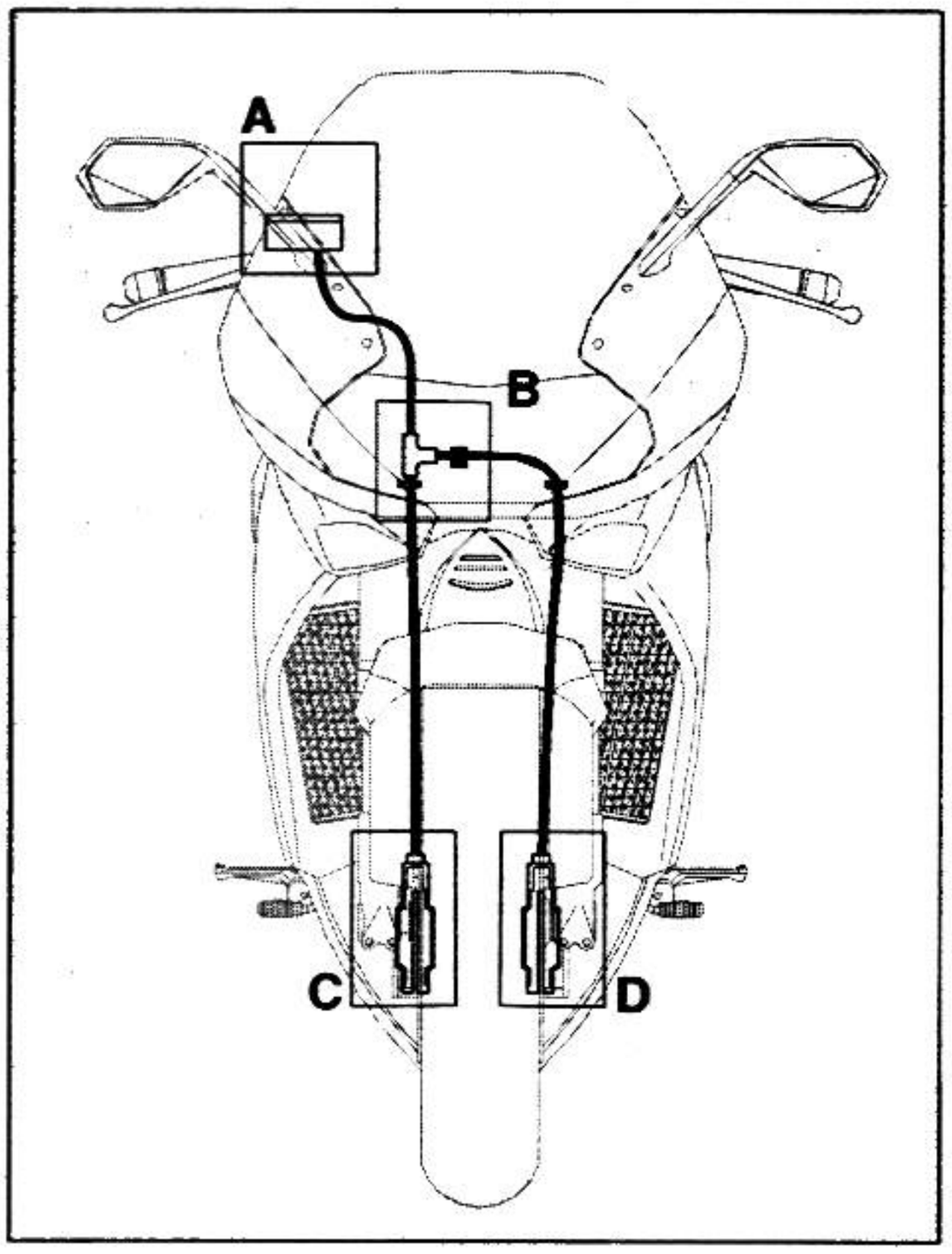

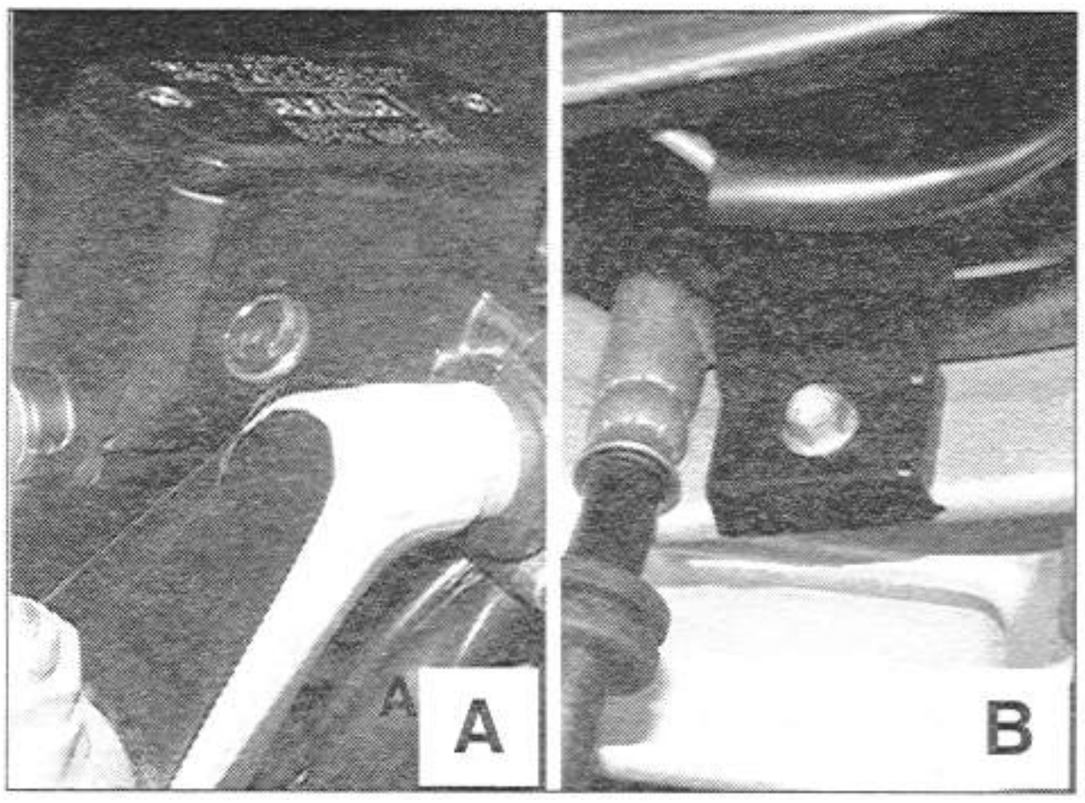

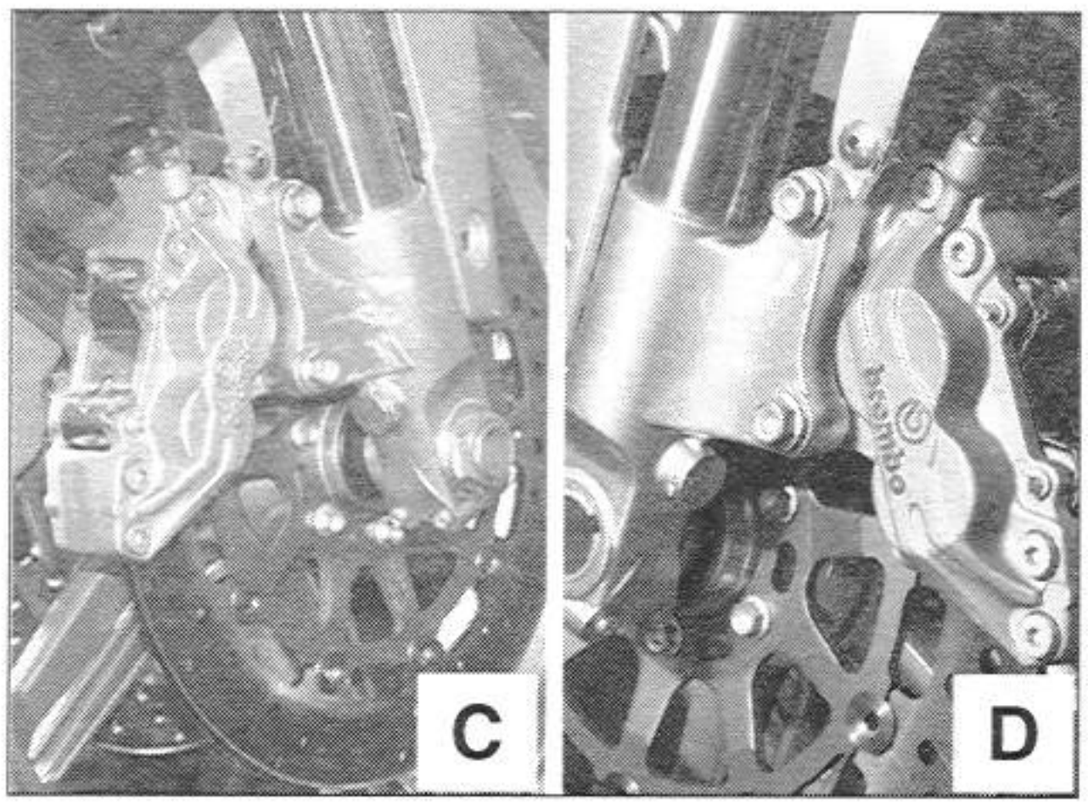

8.2.2 REAR BRAKE LINES

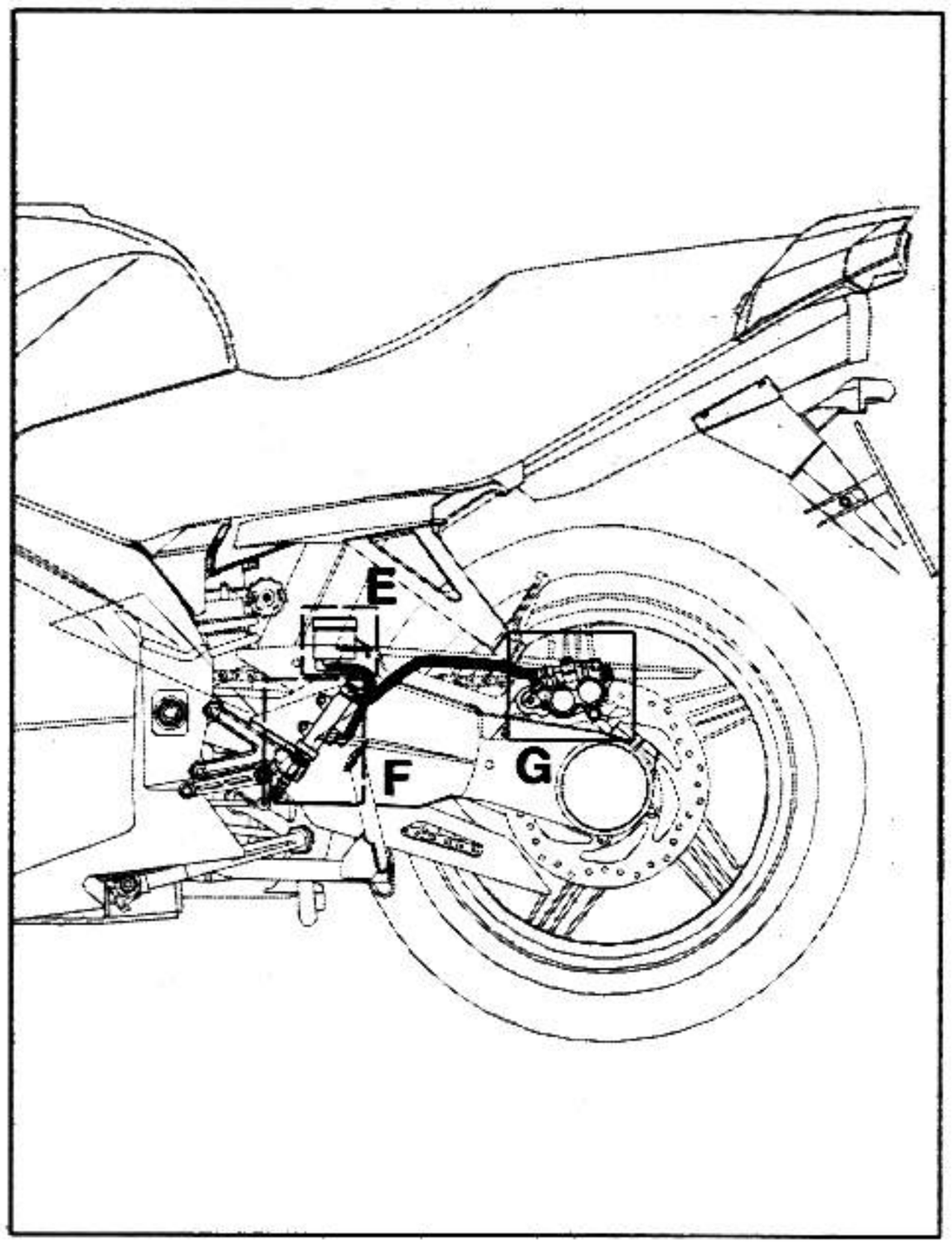

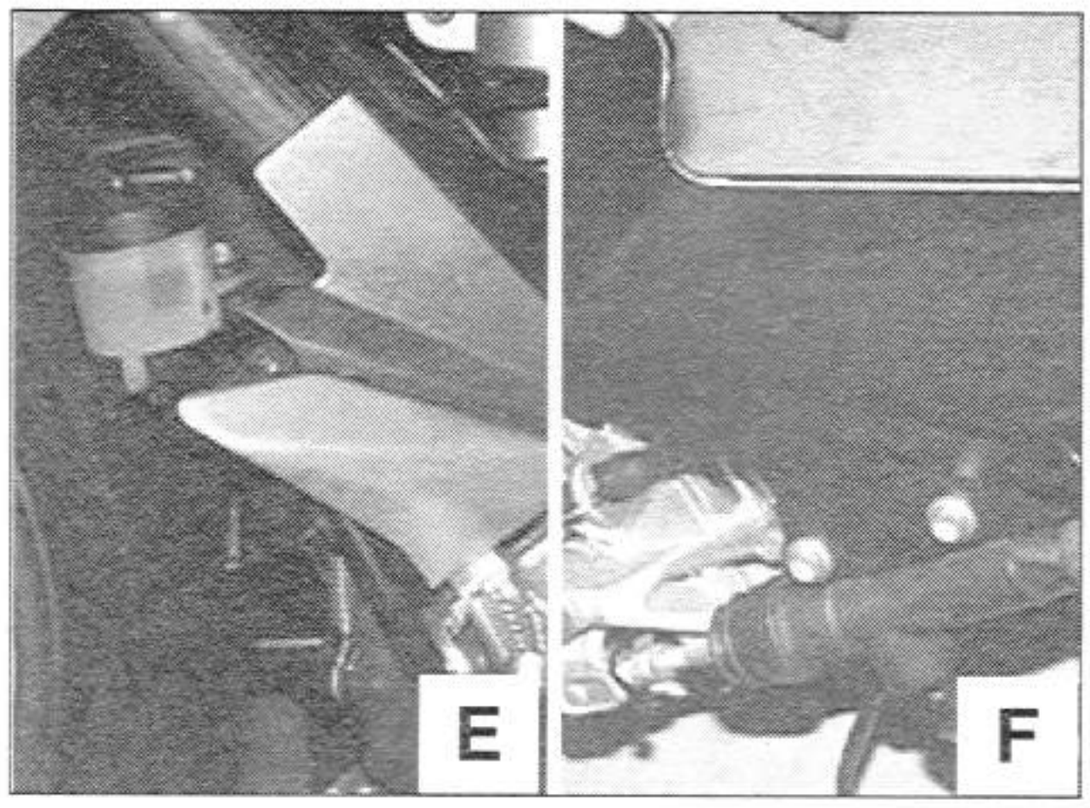

8.2.3 FUEL SYSTEM LINES

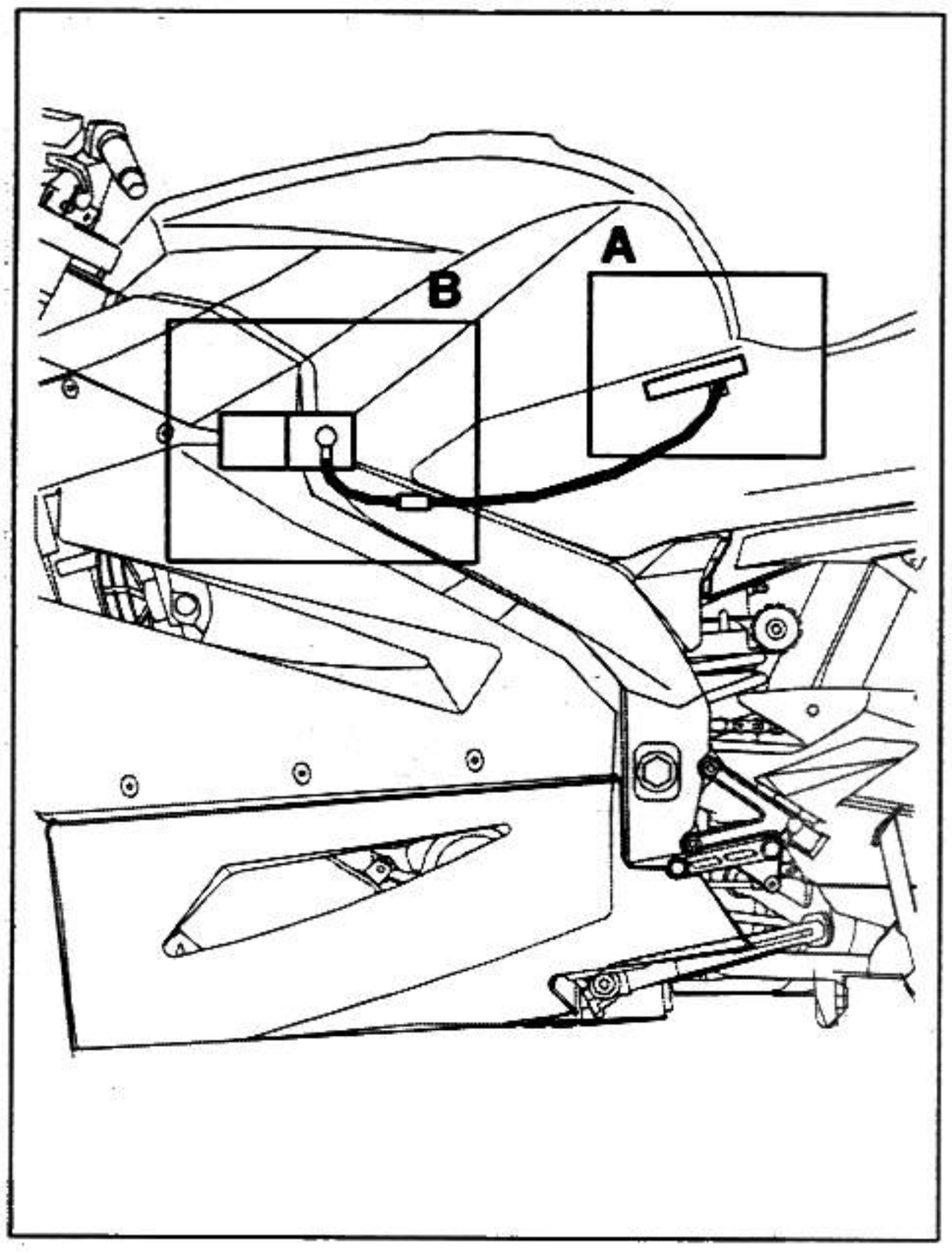

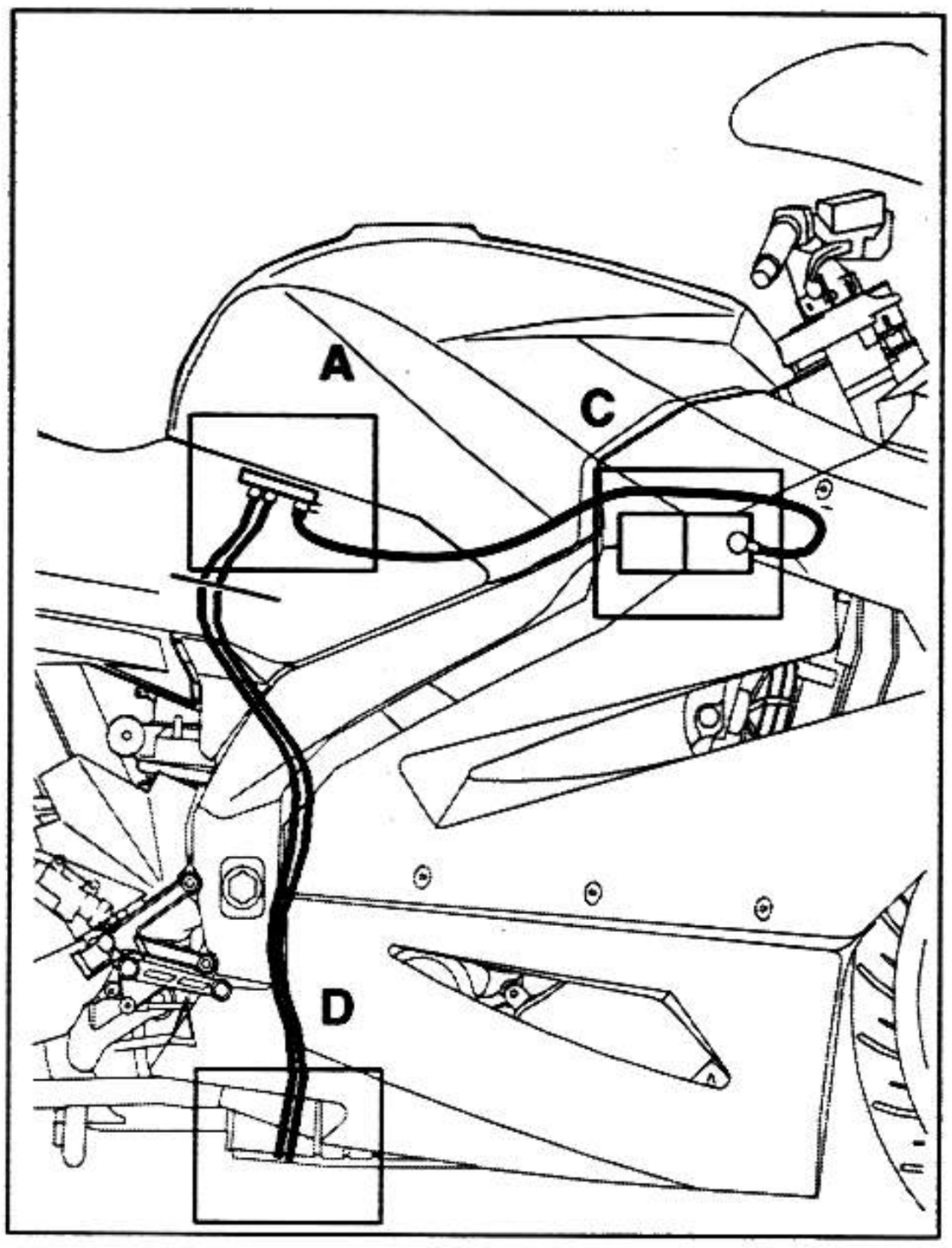

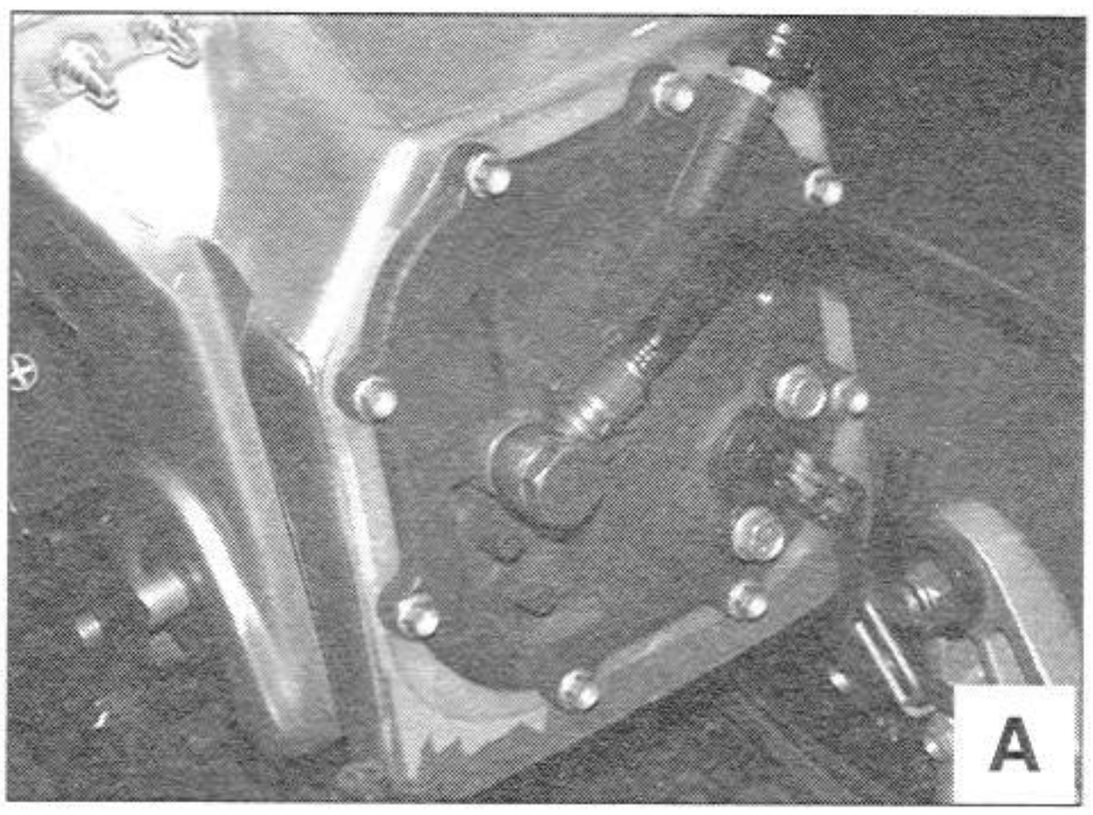

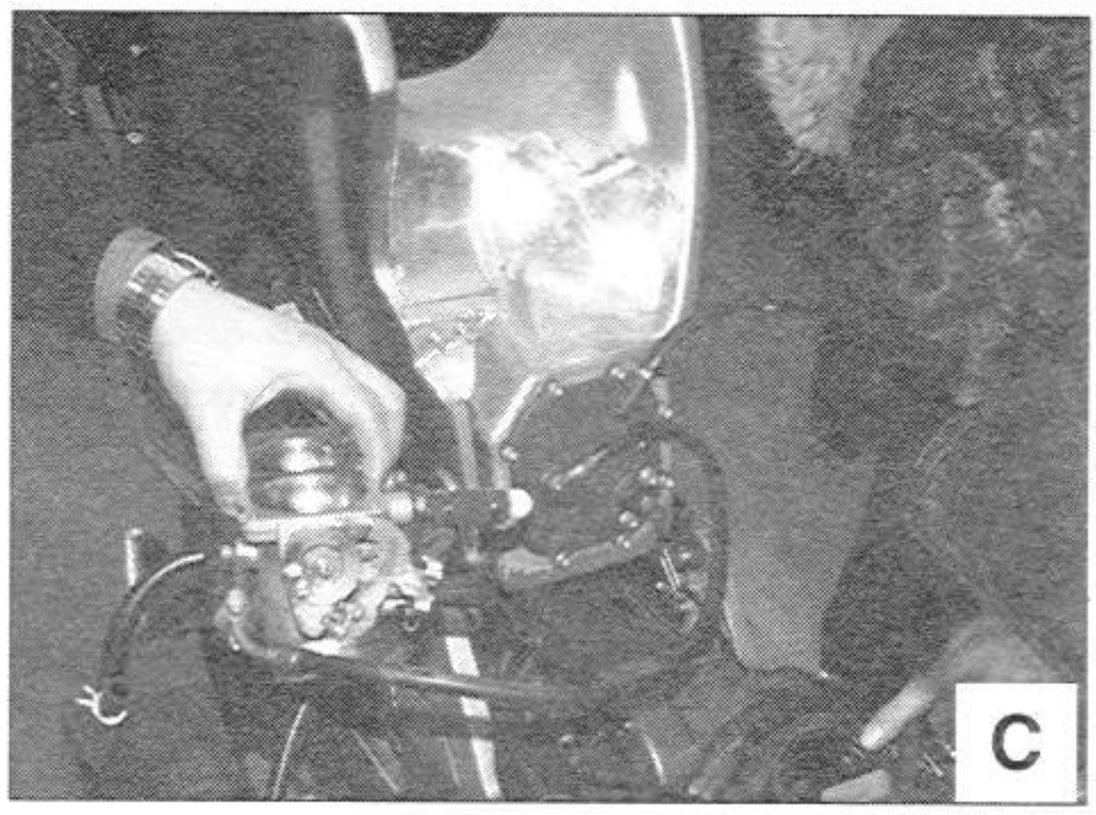

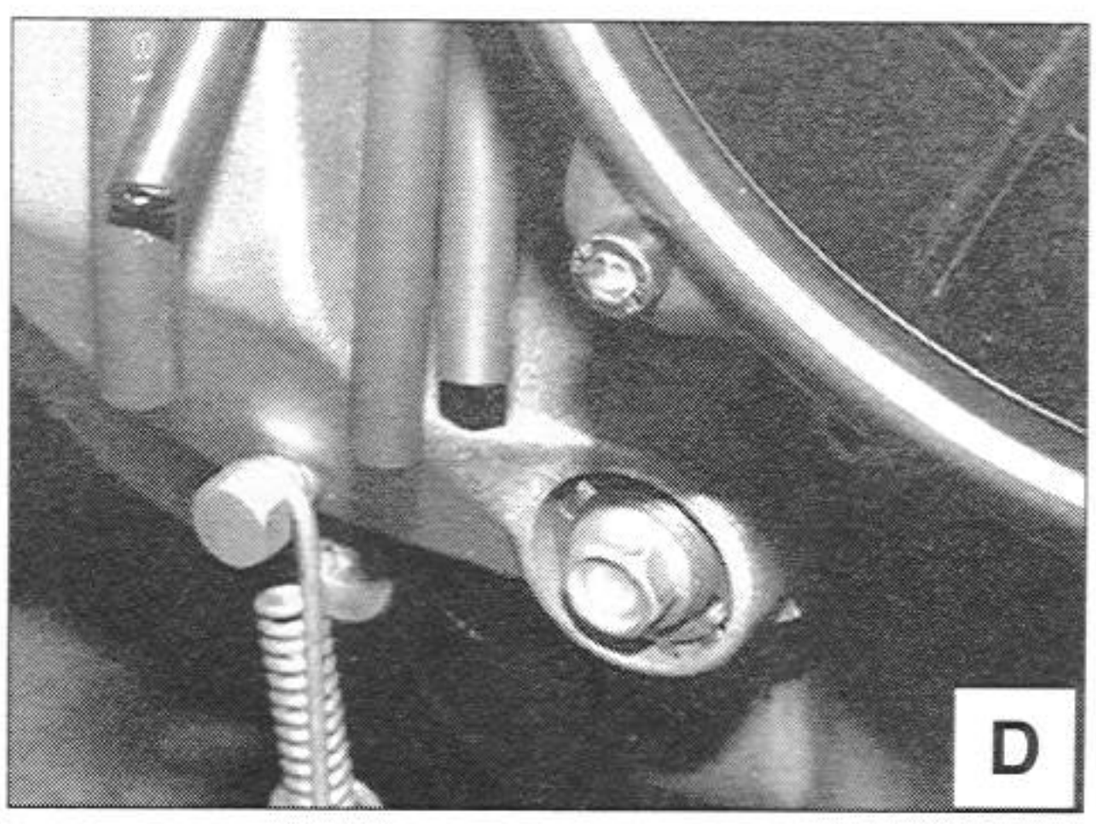

8.2. CLUTCH CONTROL LINE

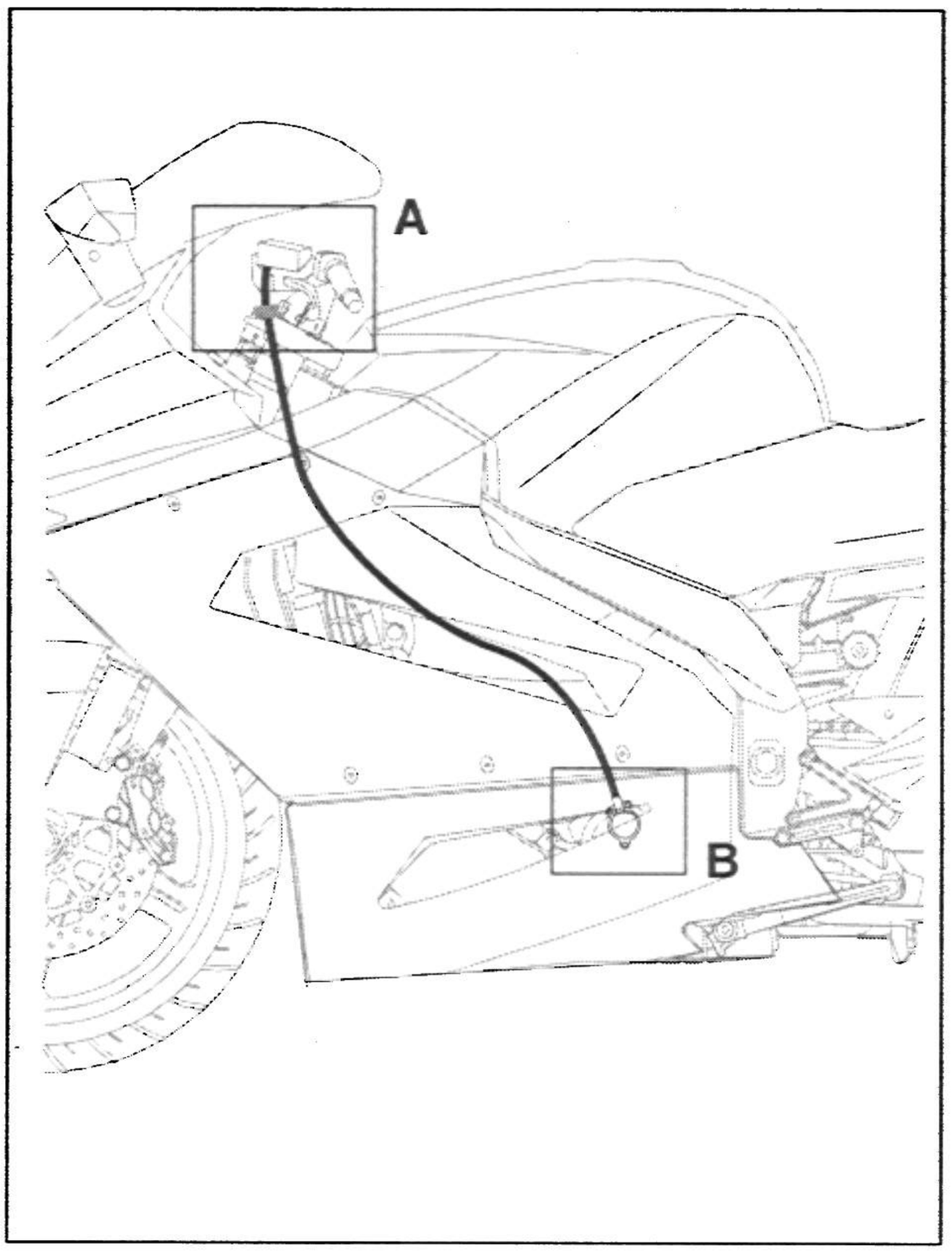

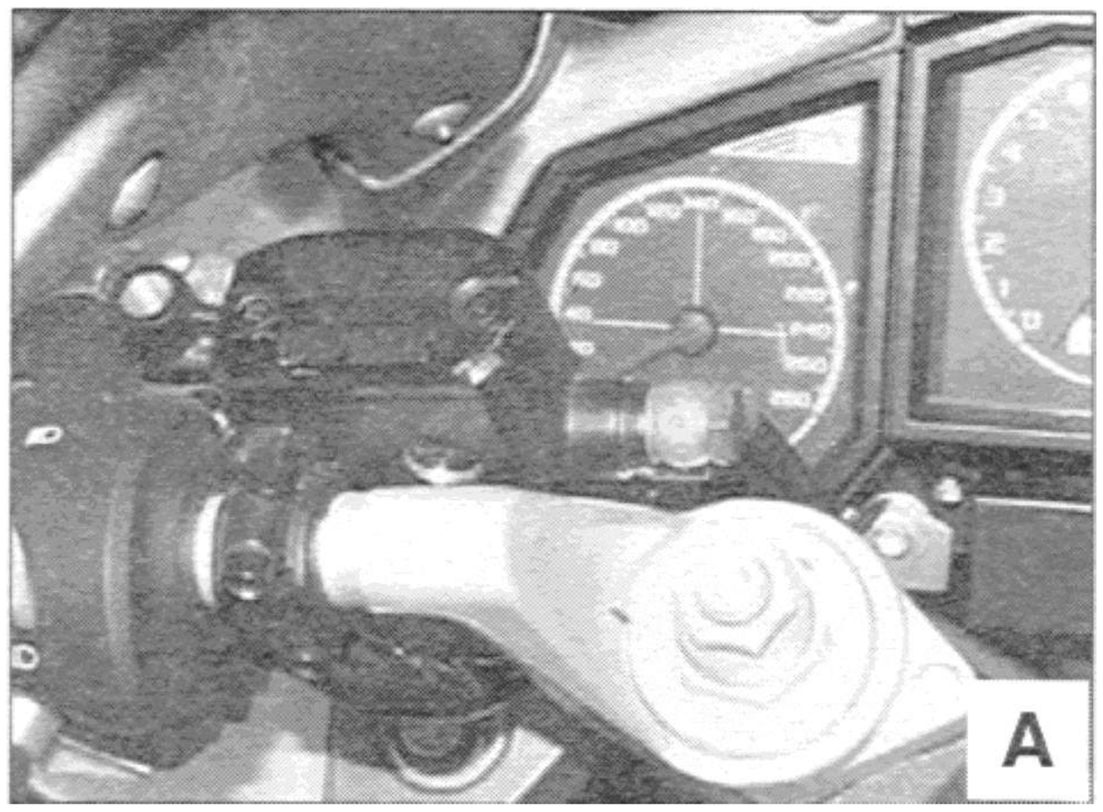

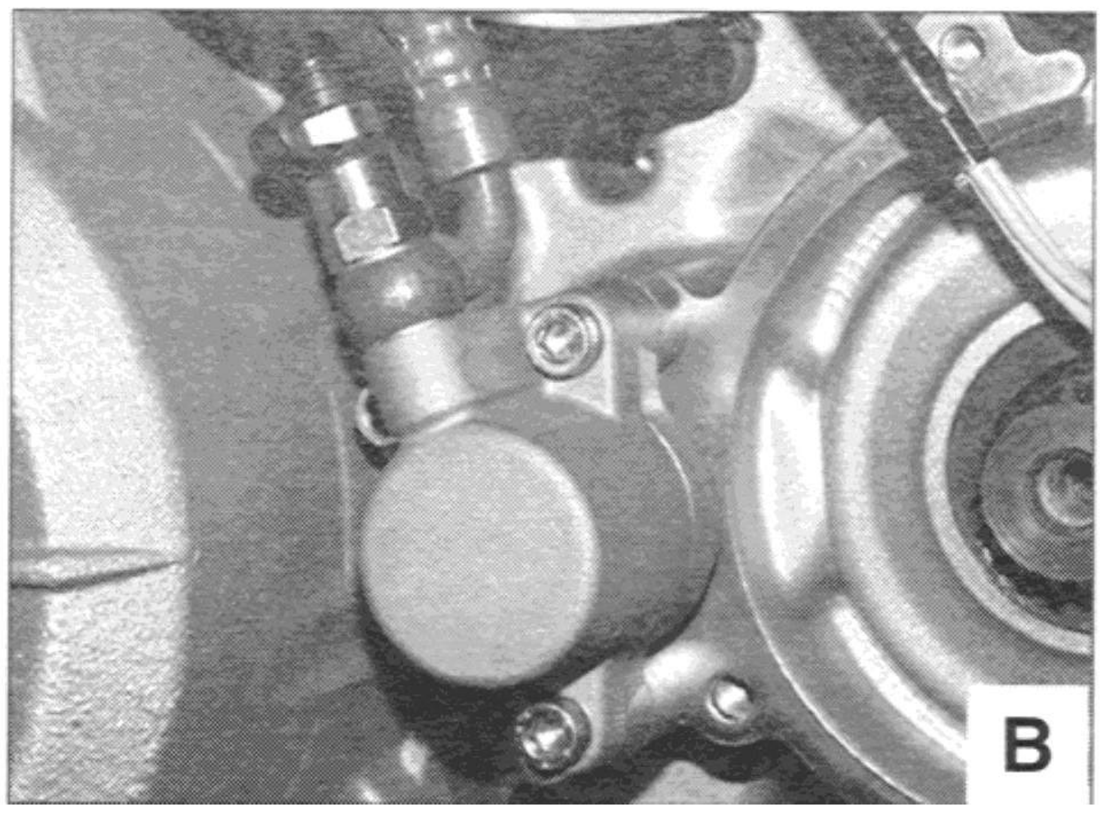

8.2.5 PPC DEVICE PRESSURE LINES

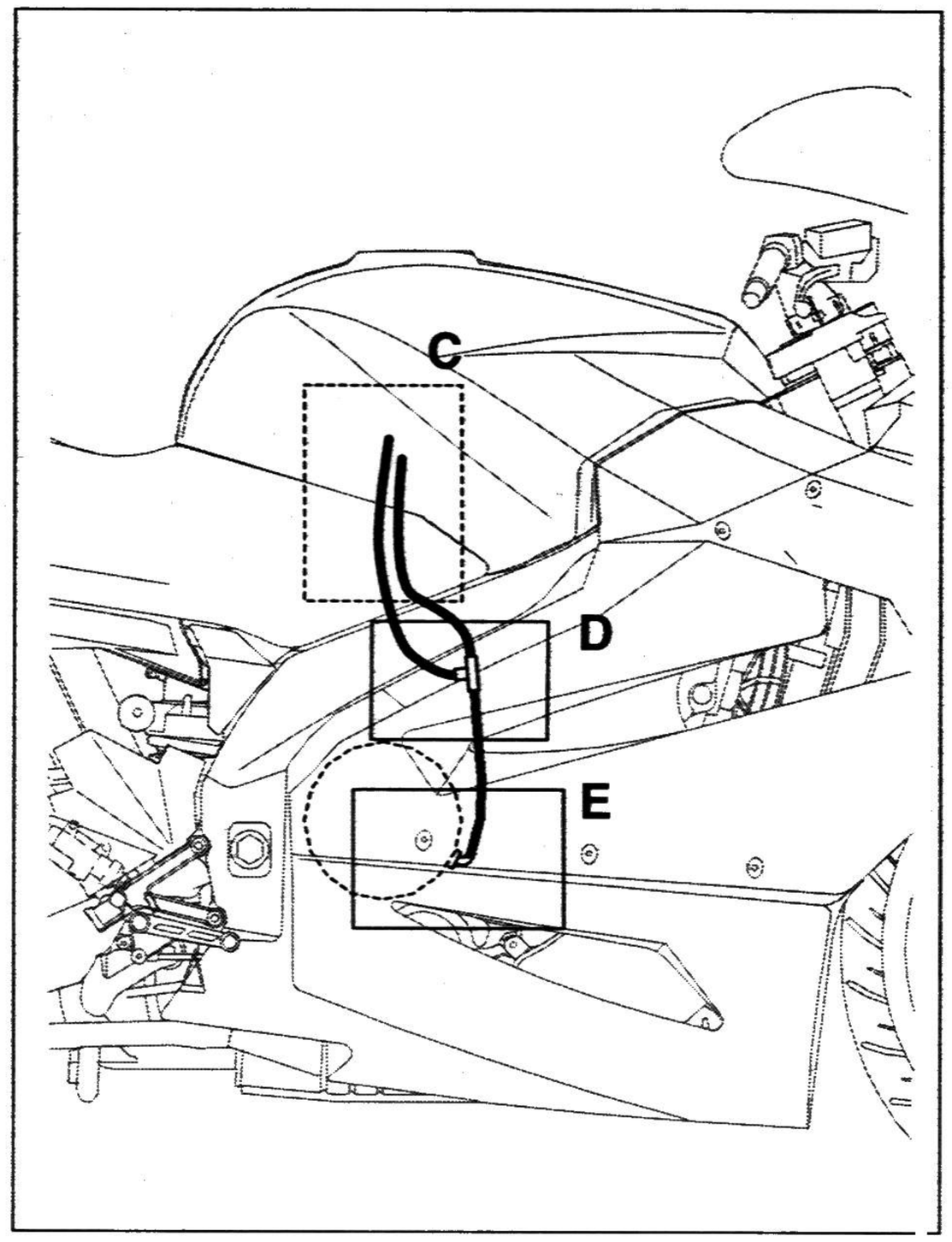

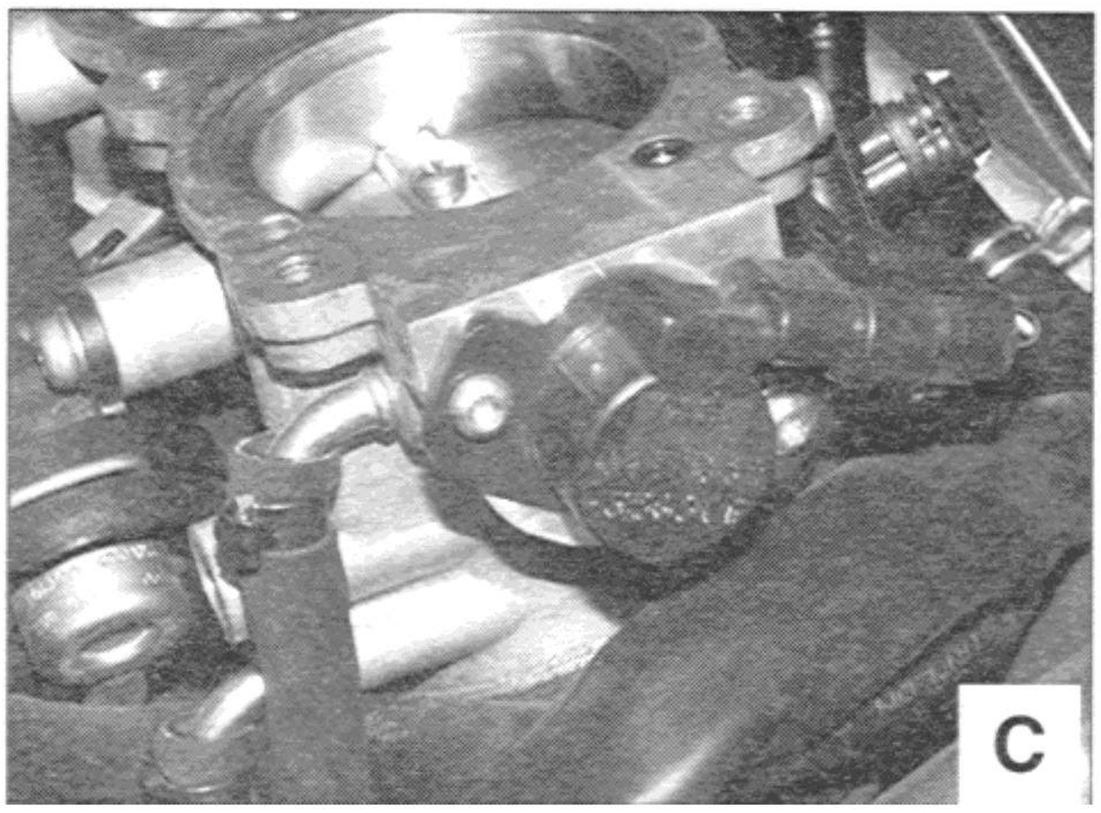

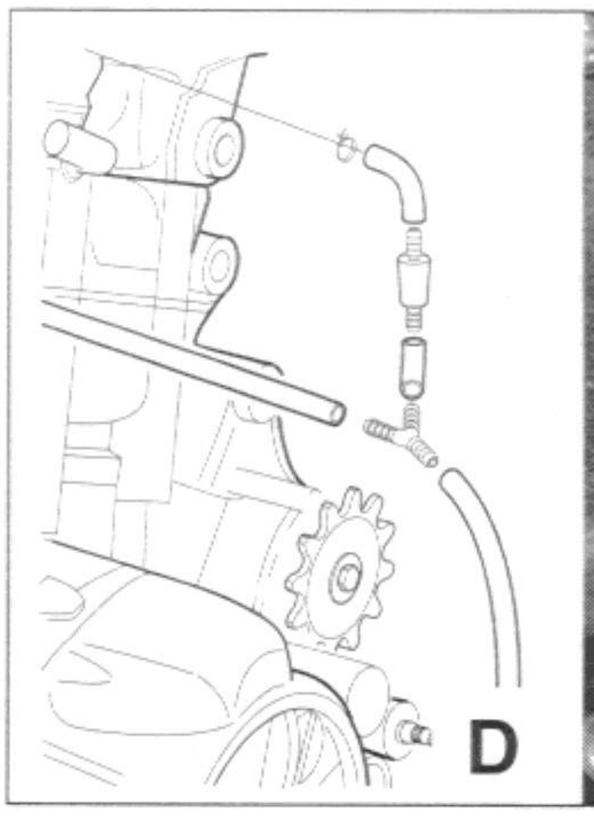

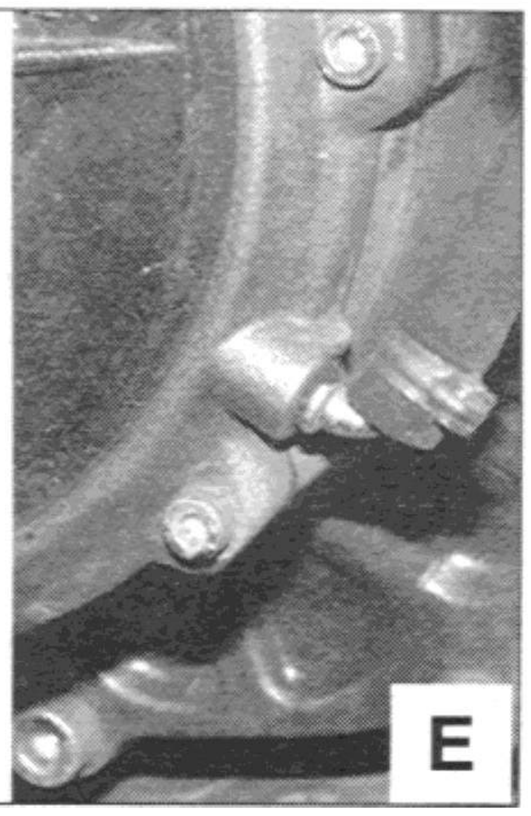

8.2.6 COOLING SYSTEM LINES

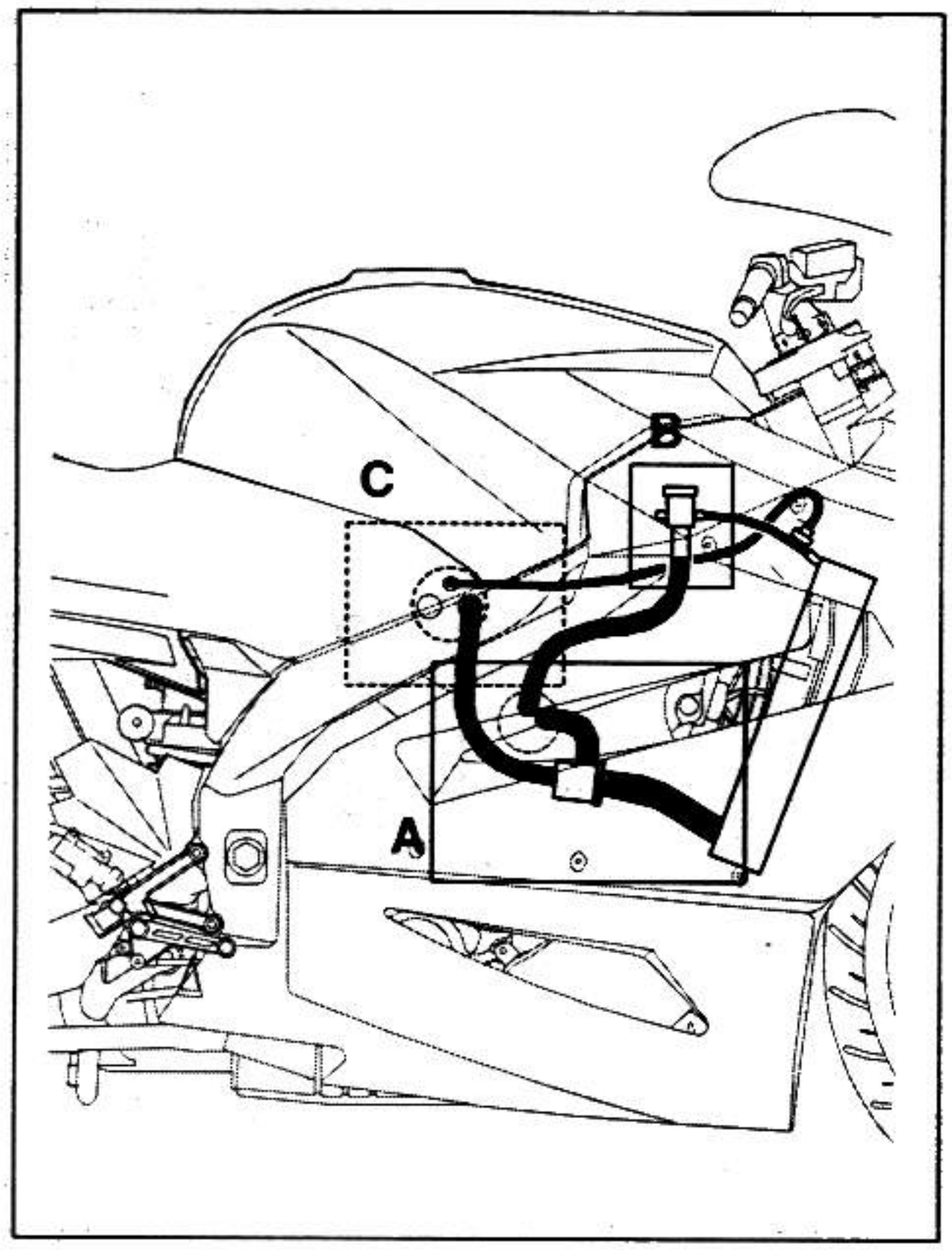

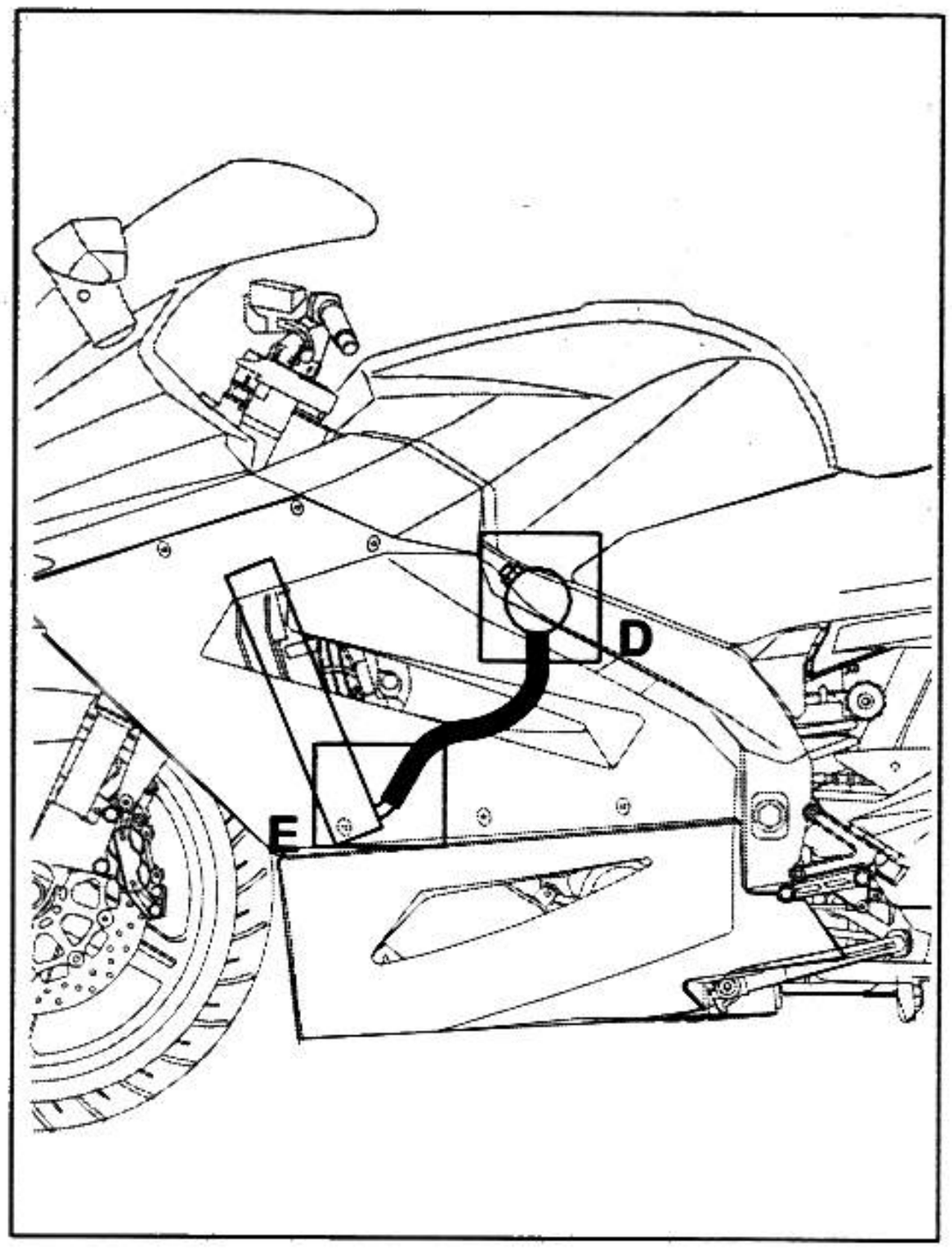

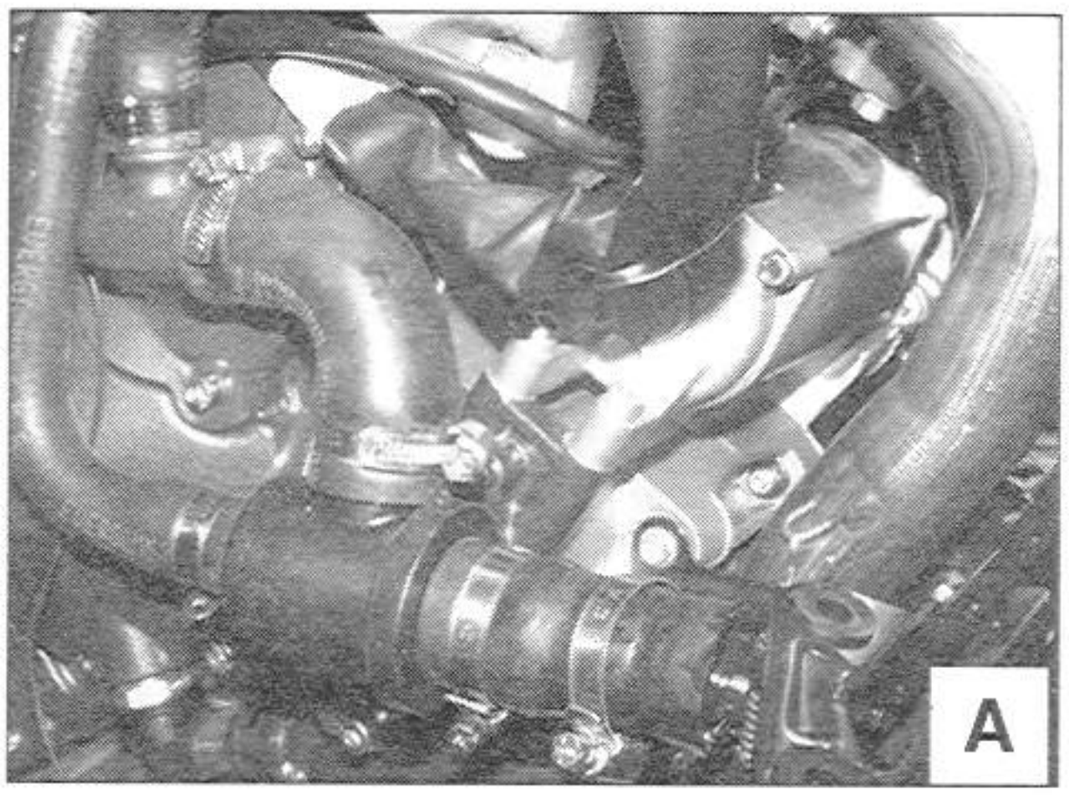

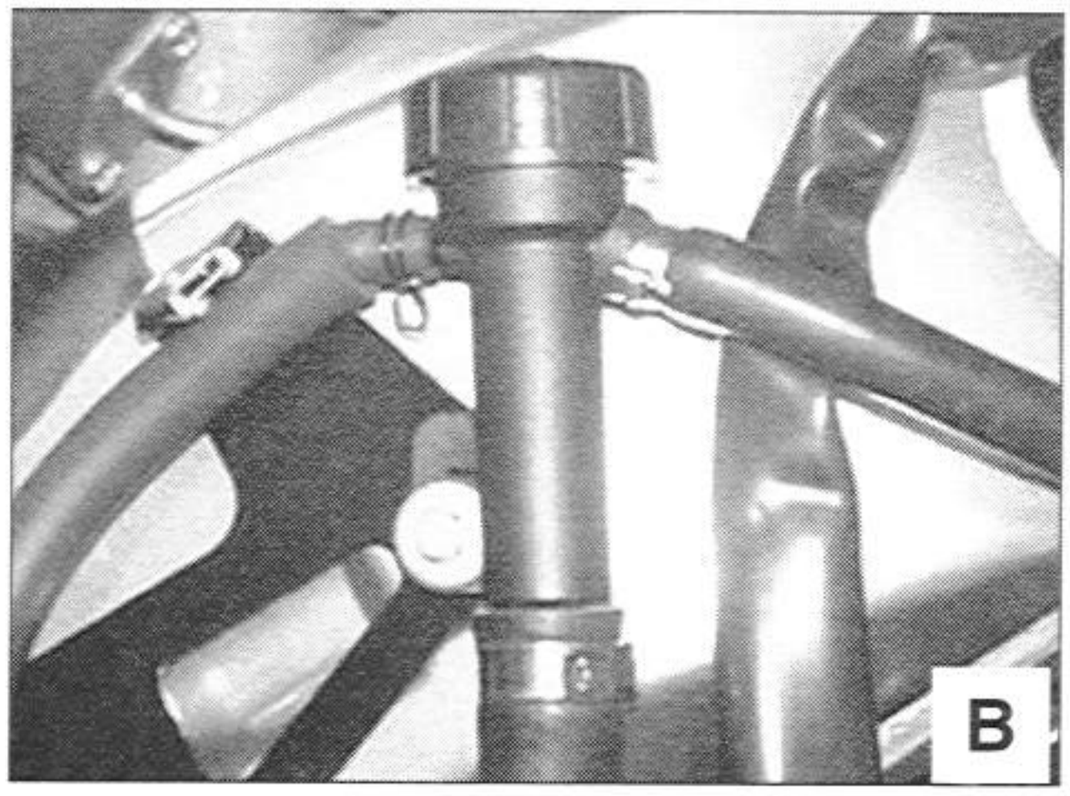

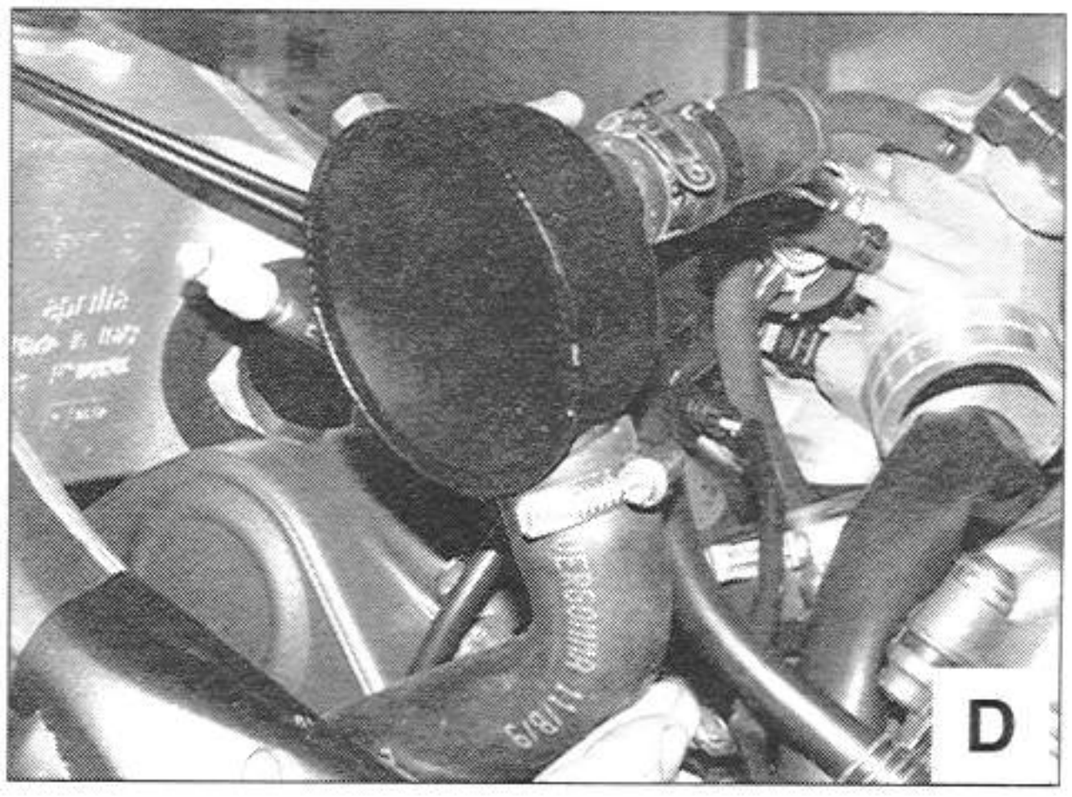

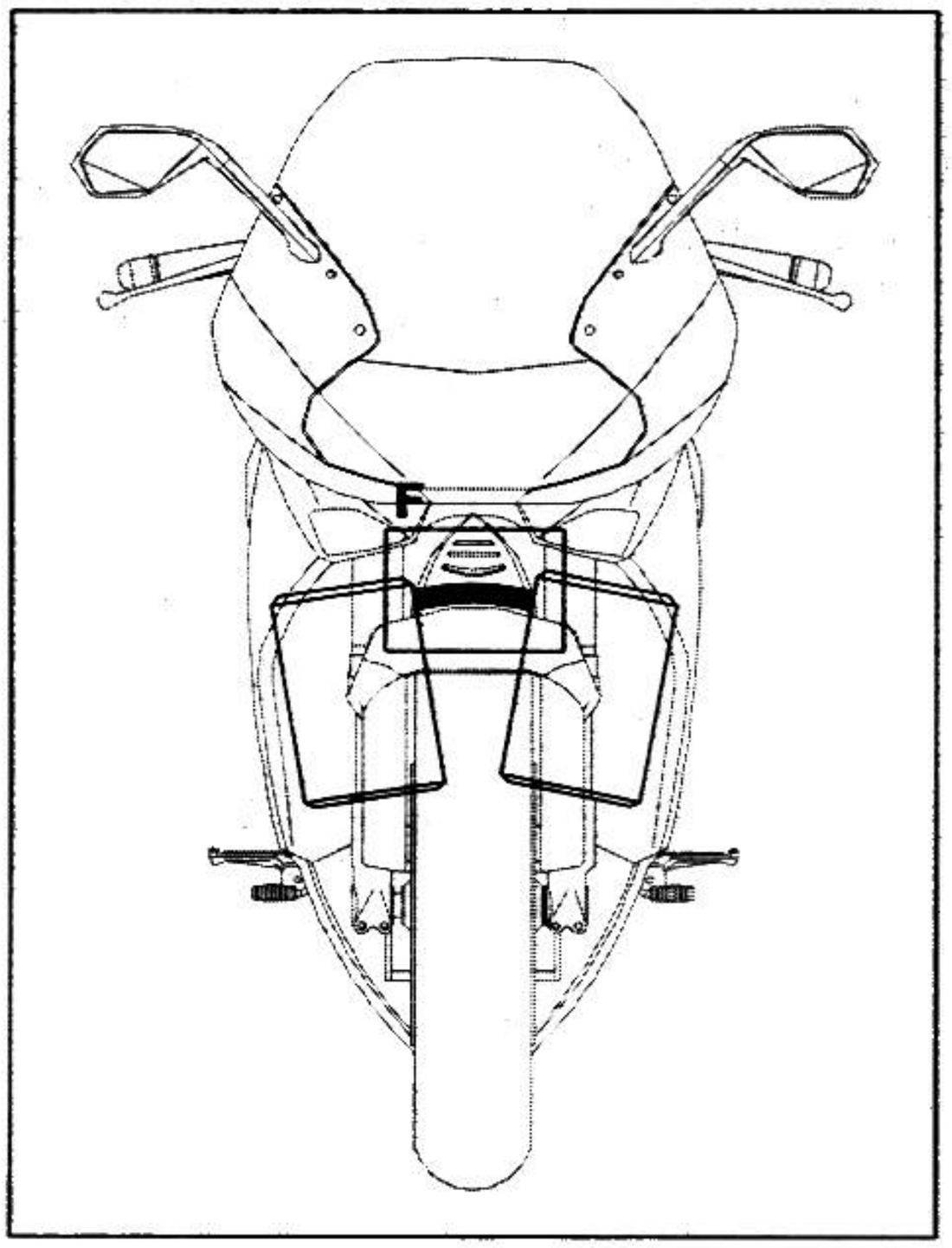
F

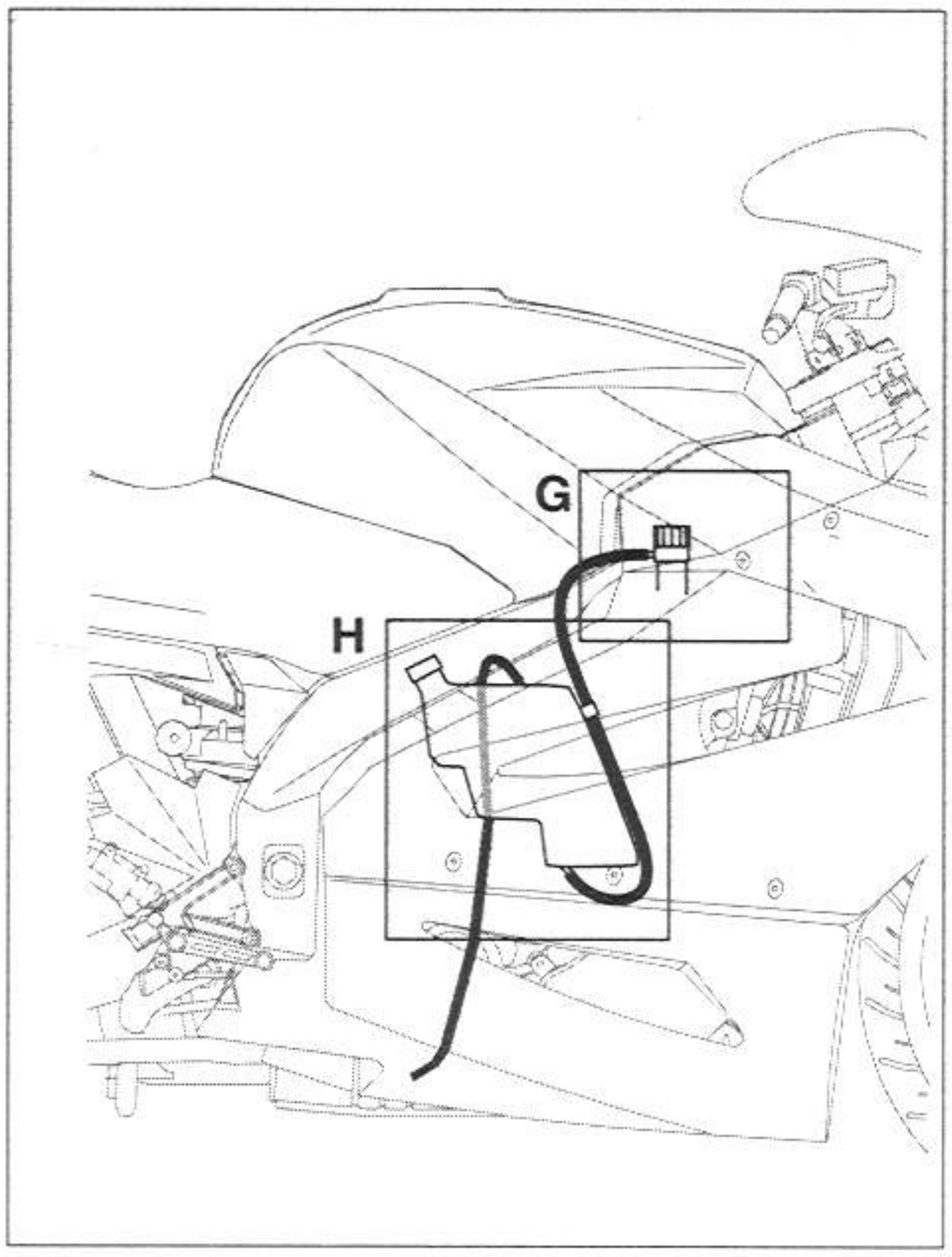
G
H

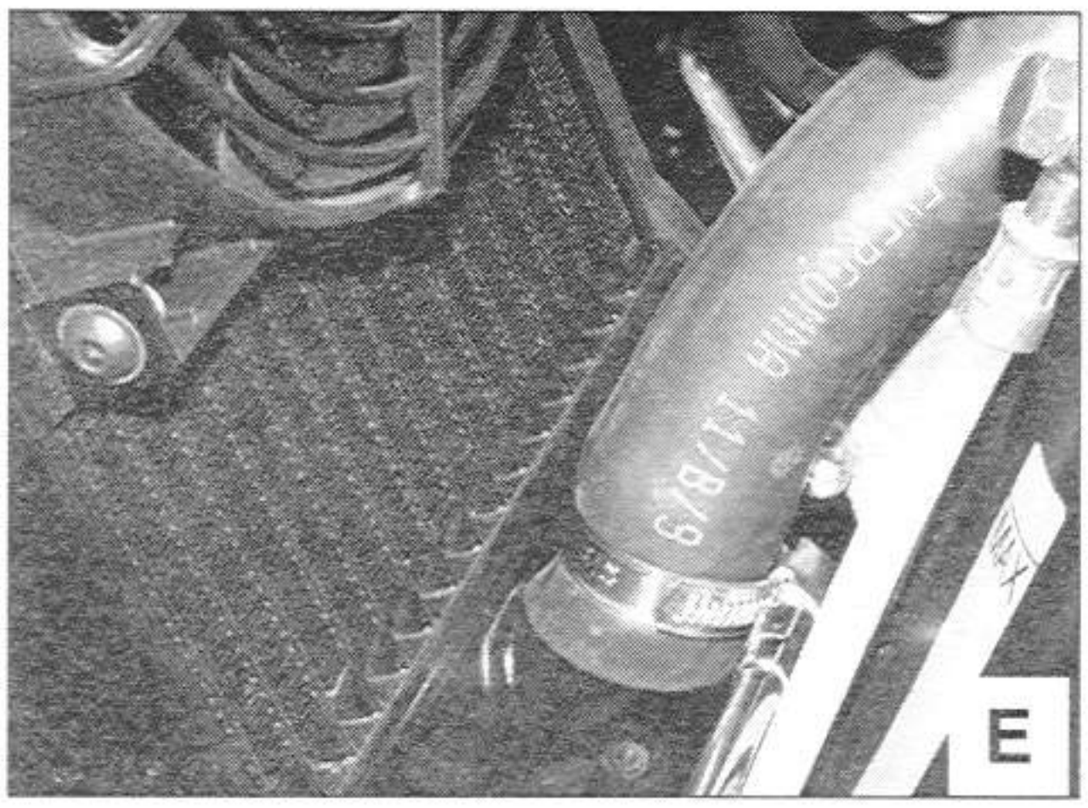
E

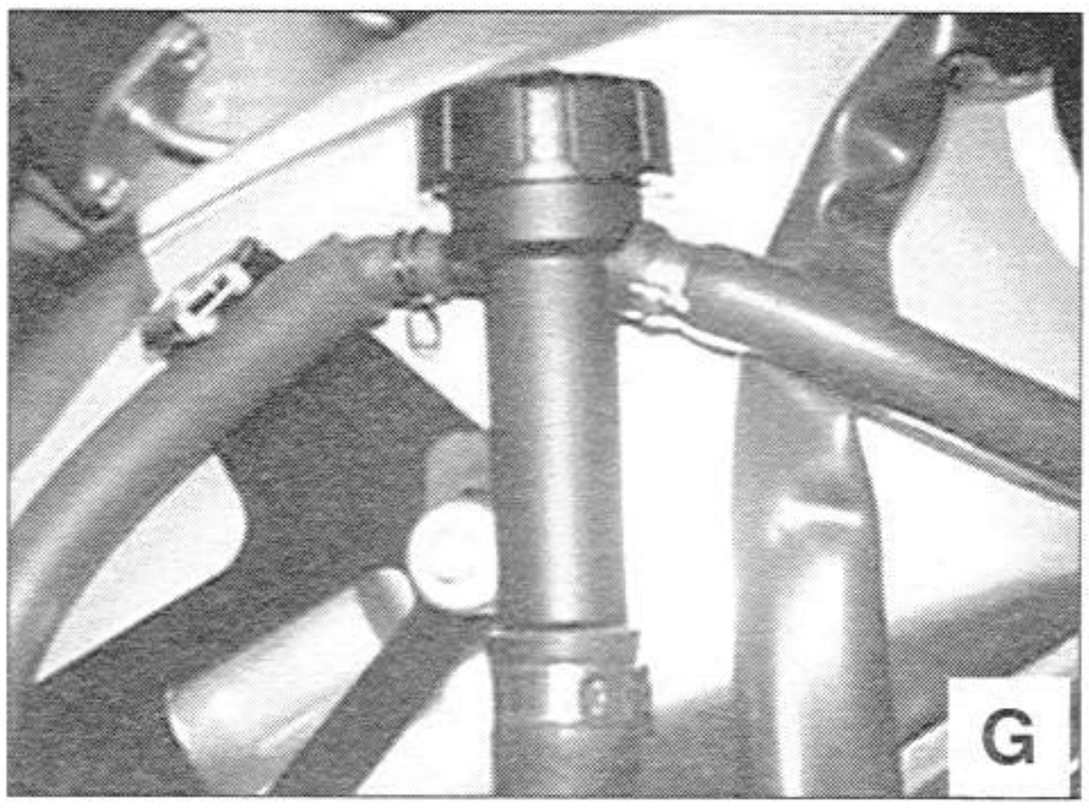
G

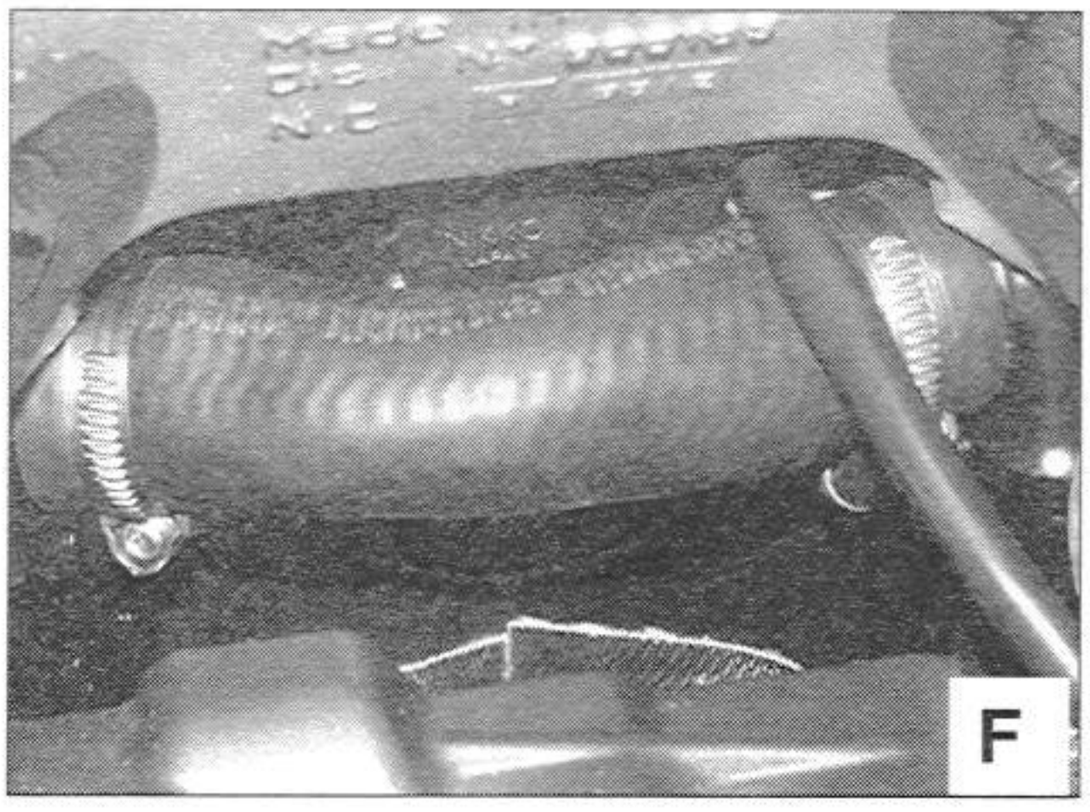
F

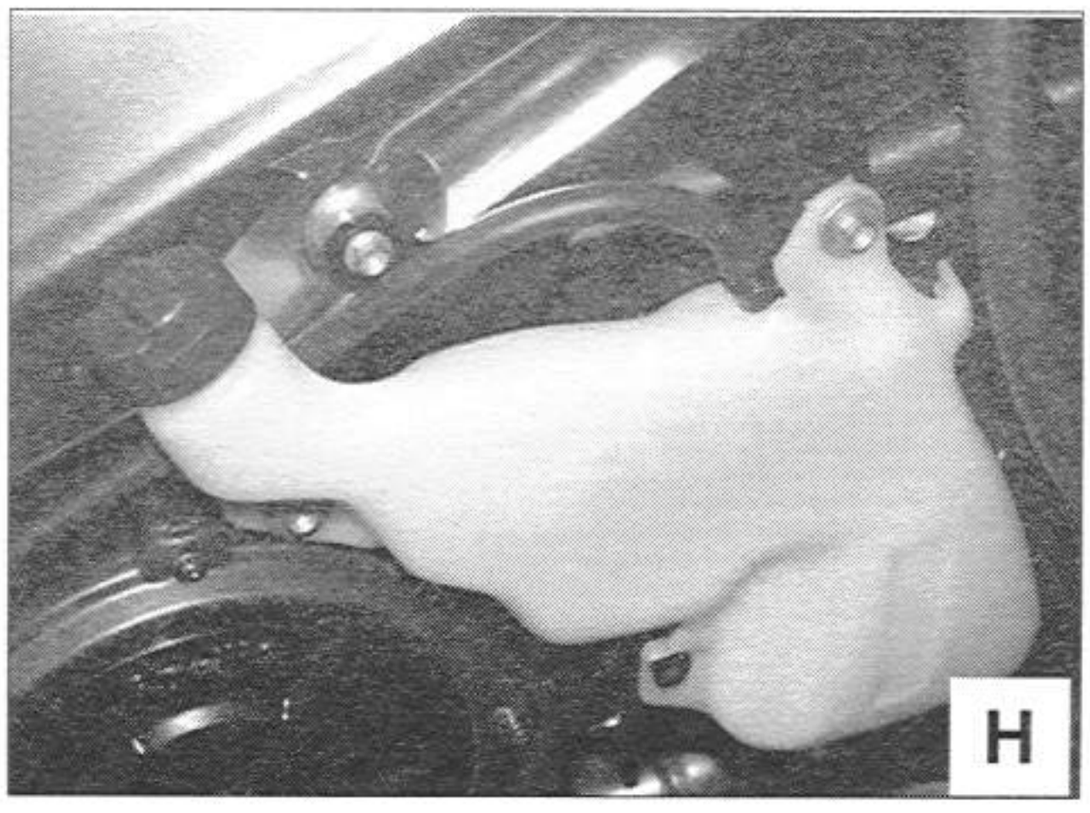
H

8.2.7 ENGINE OIL LINES

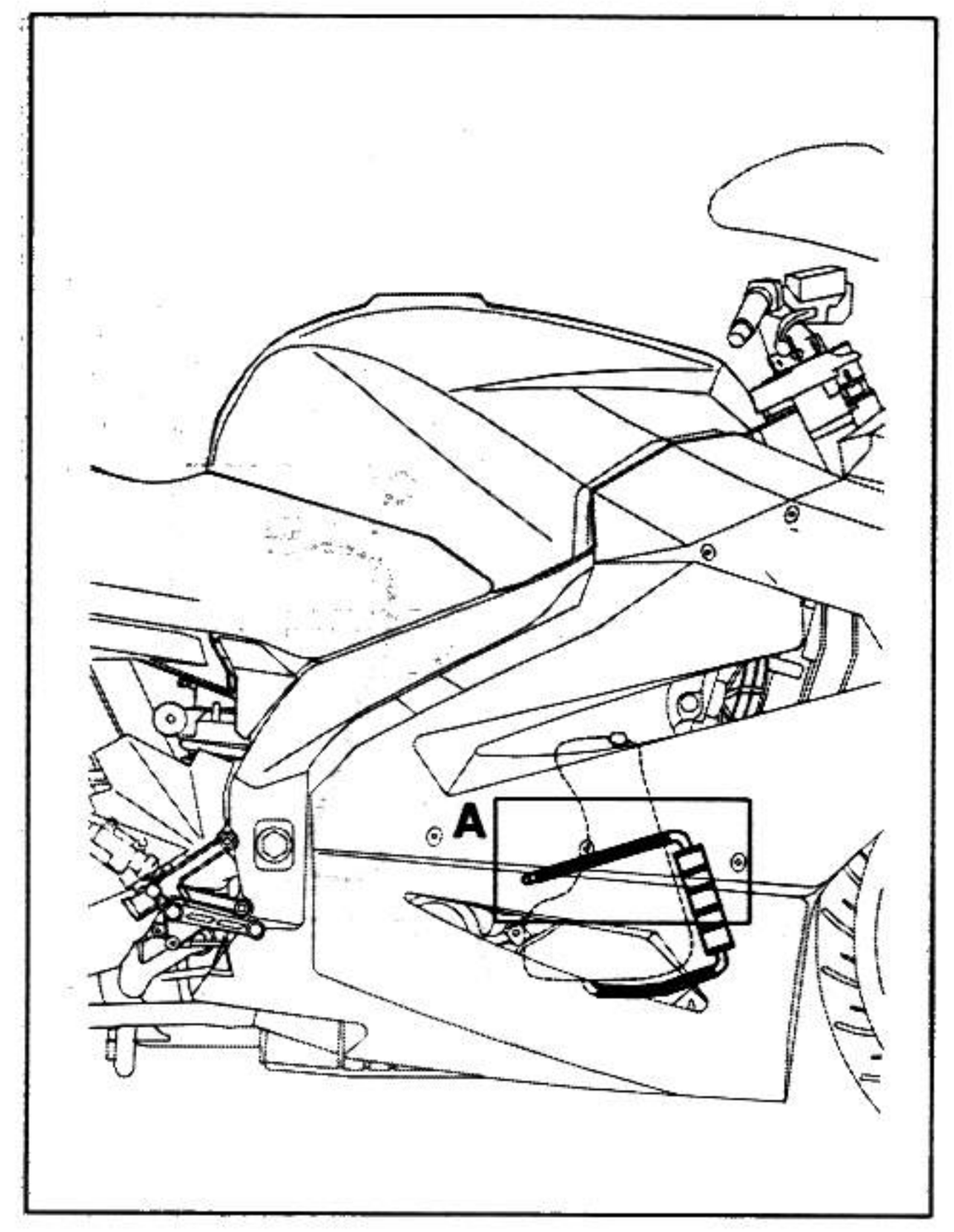

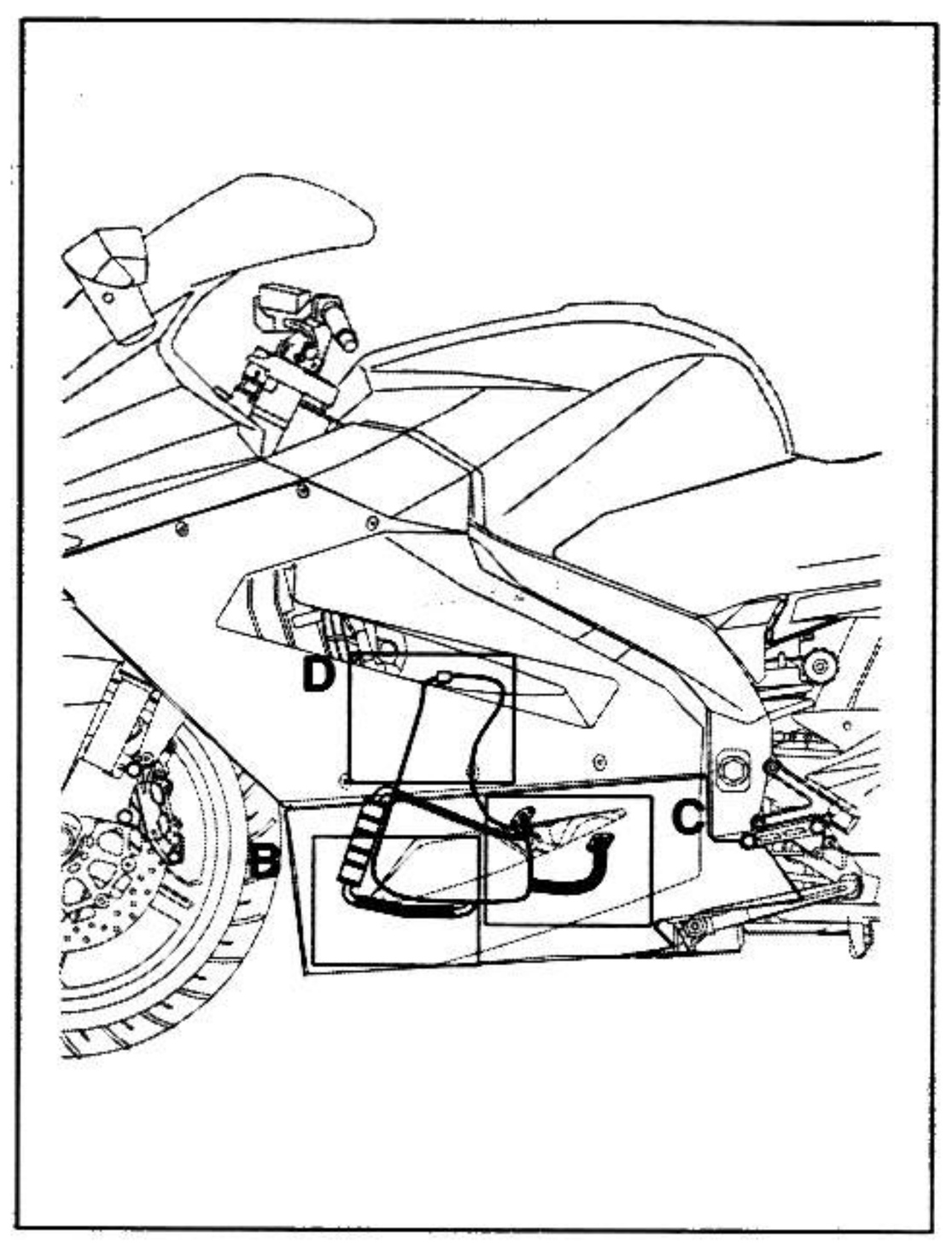

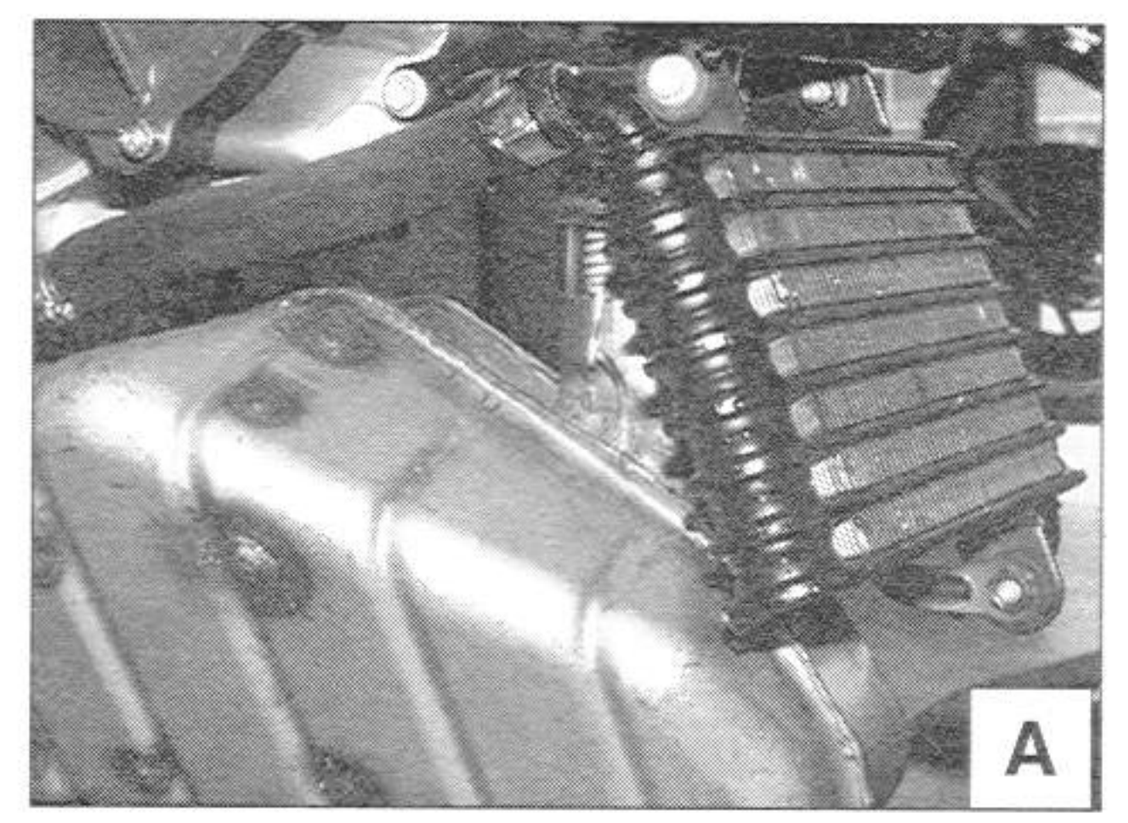

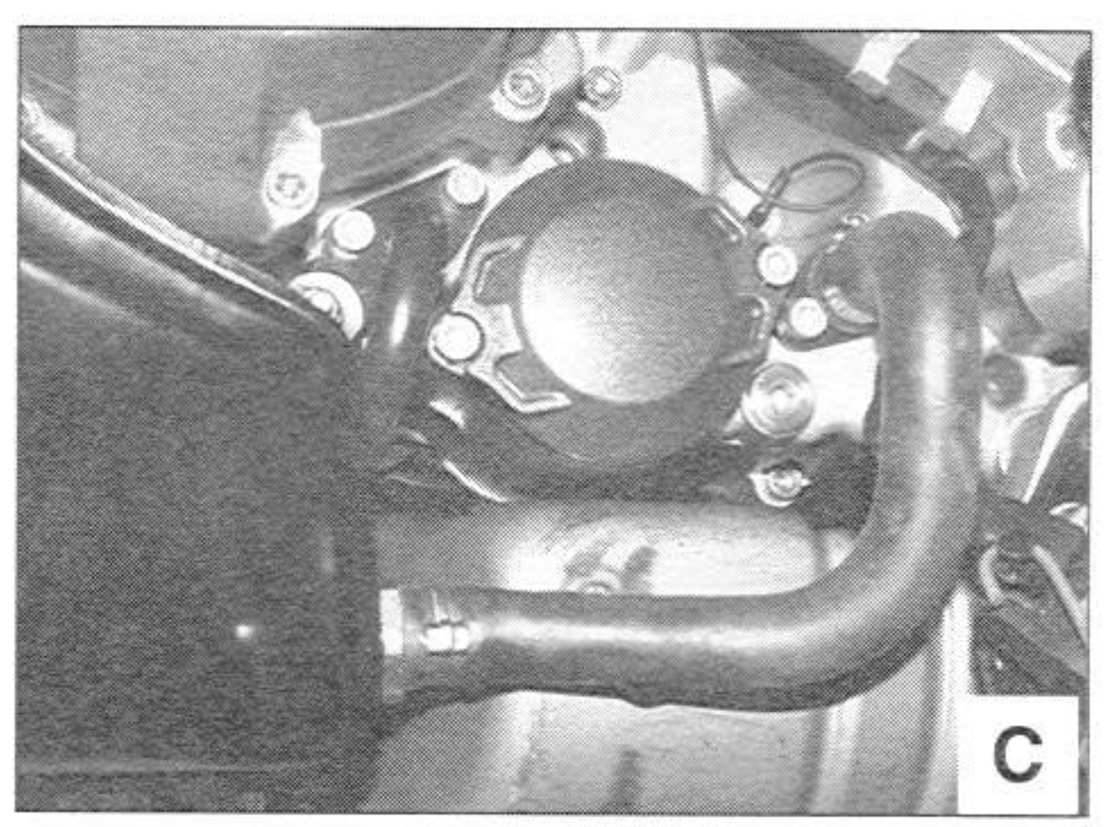

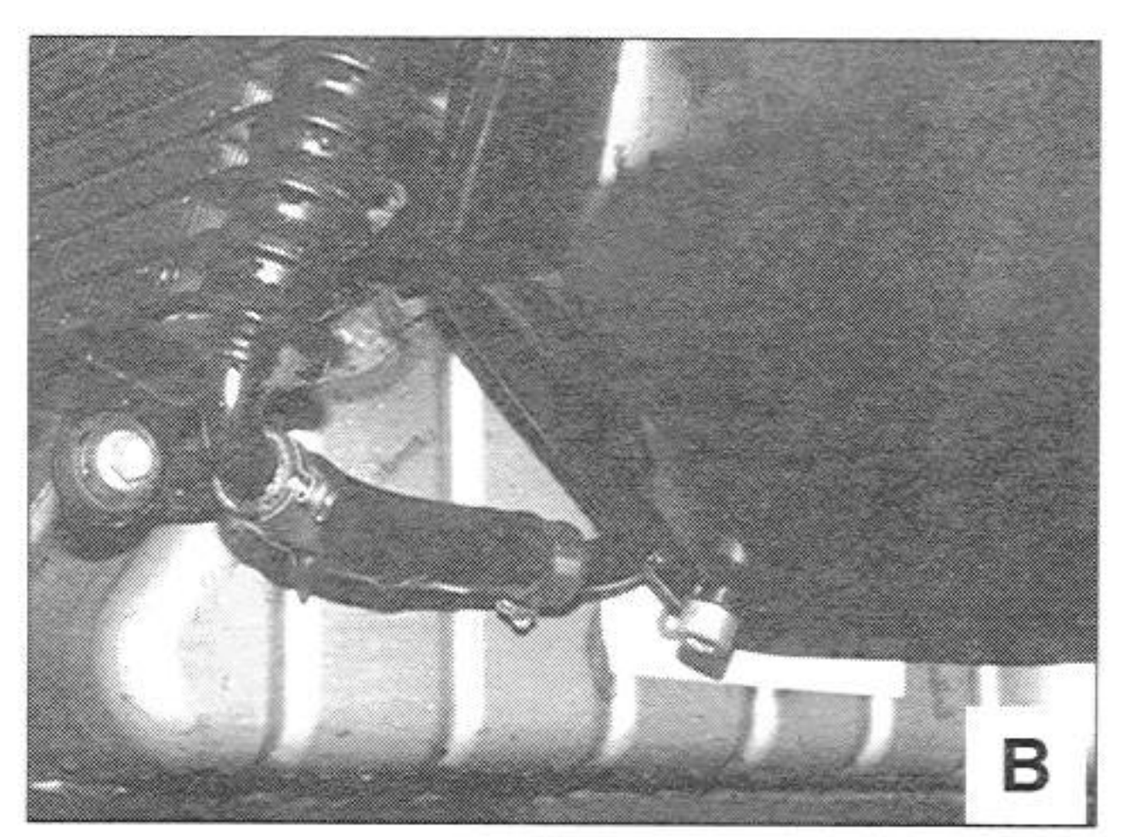

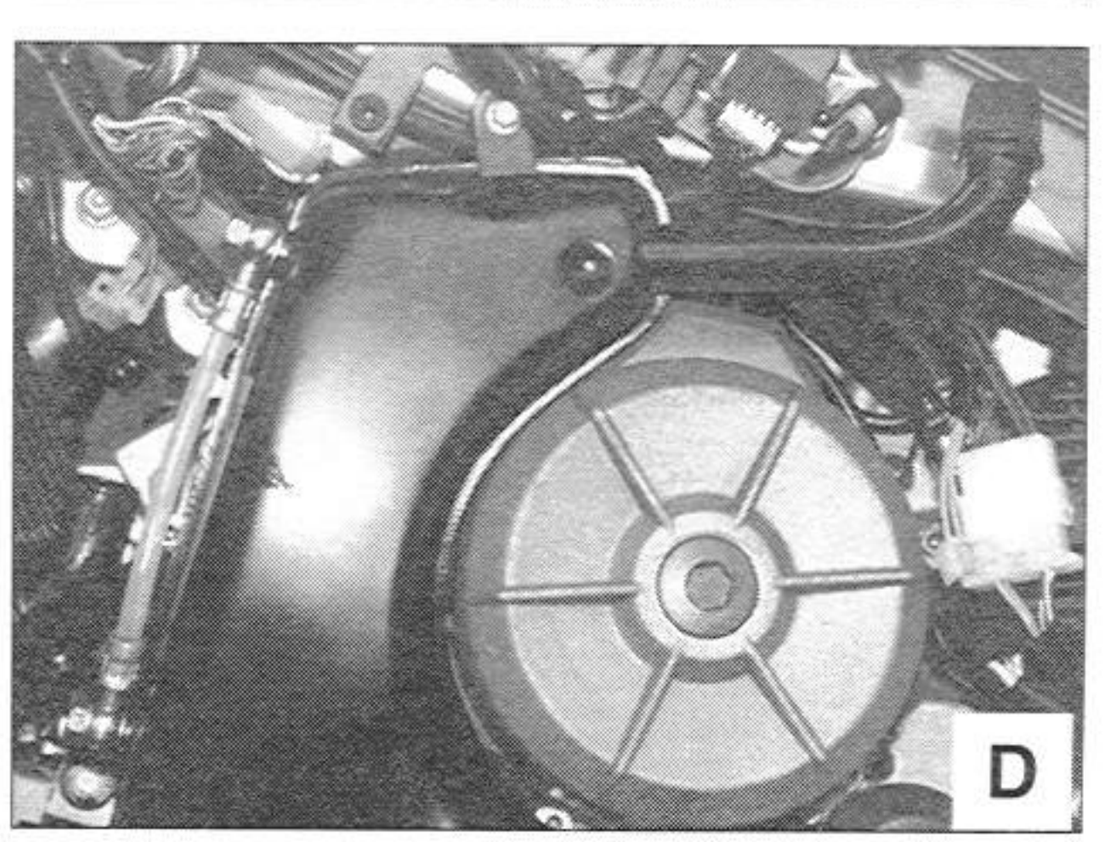

8.2.8 BREATHER AND OVERFLOW DRAINAGE LINES

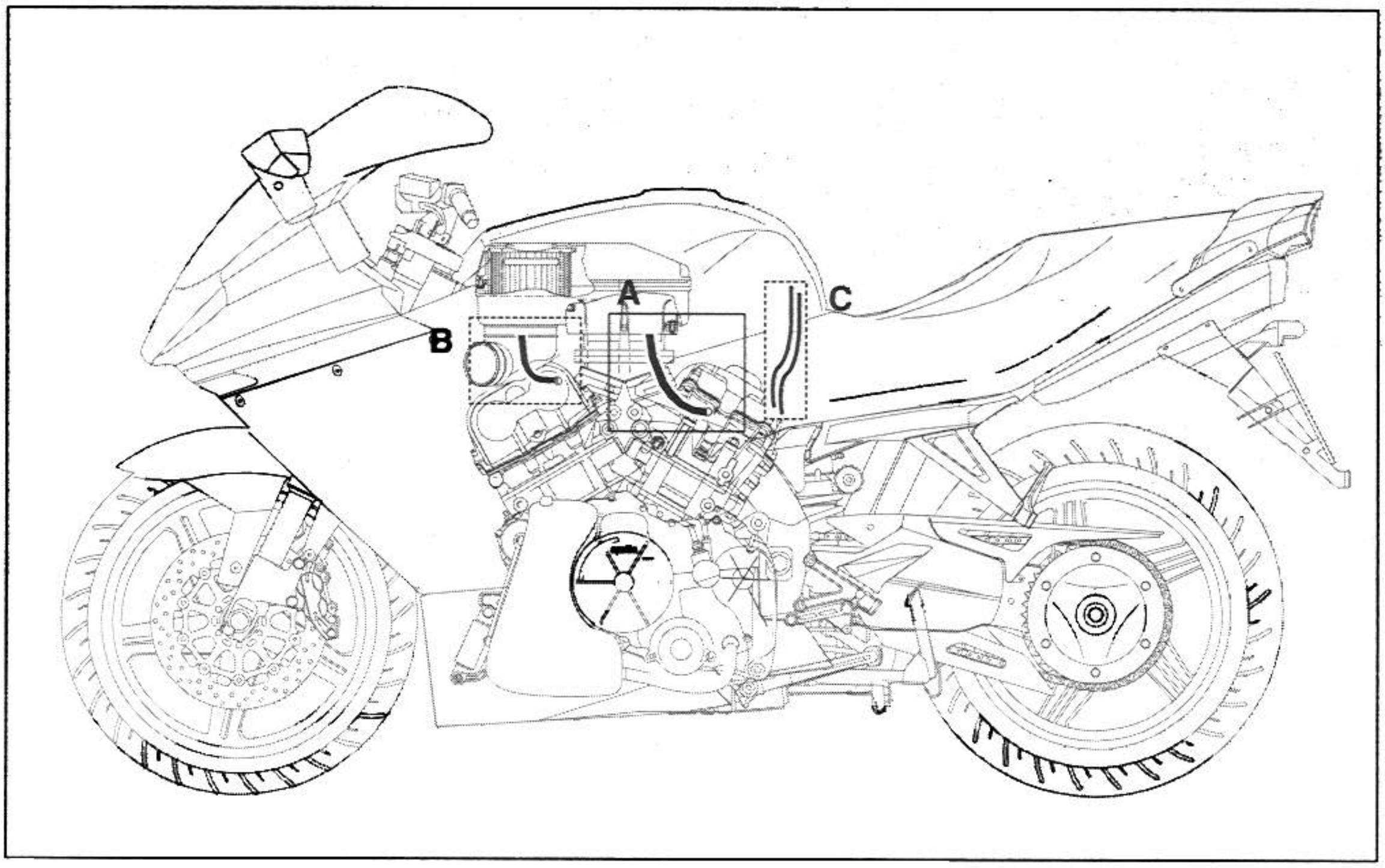

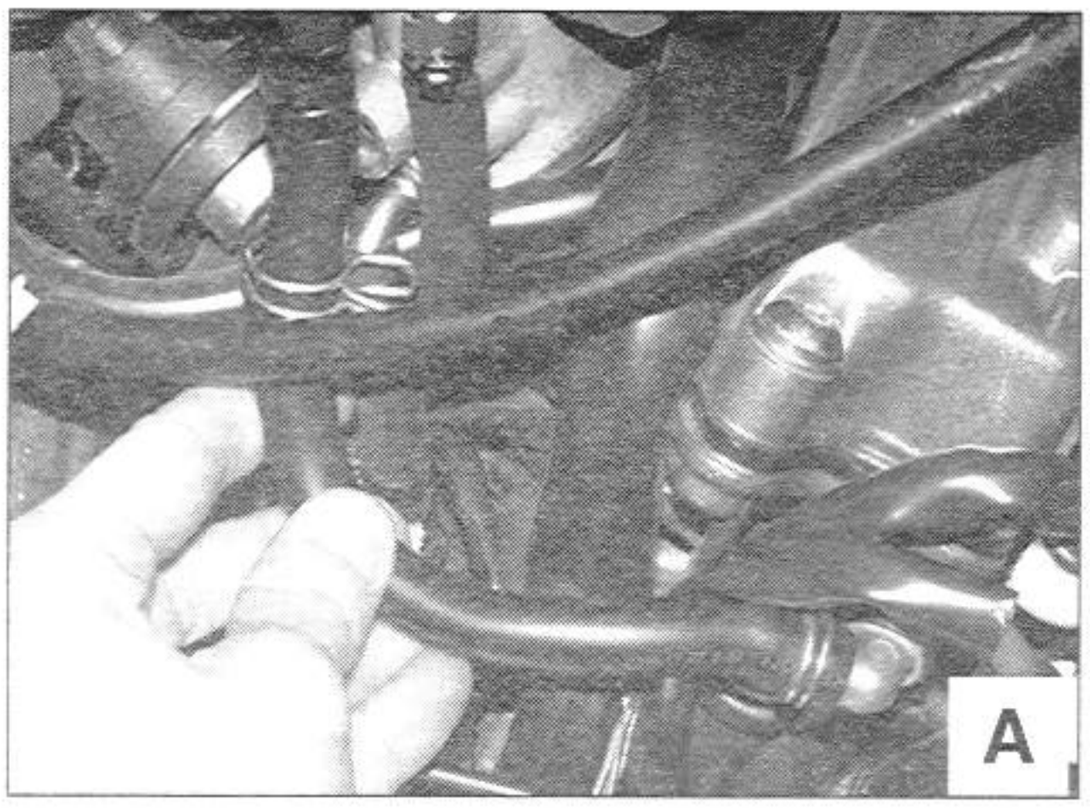

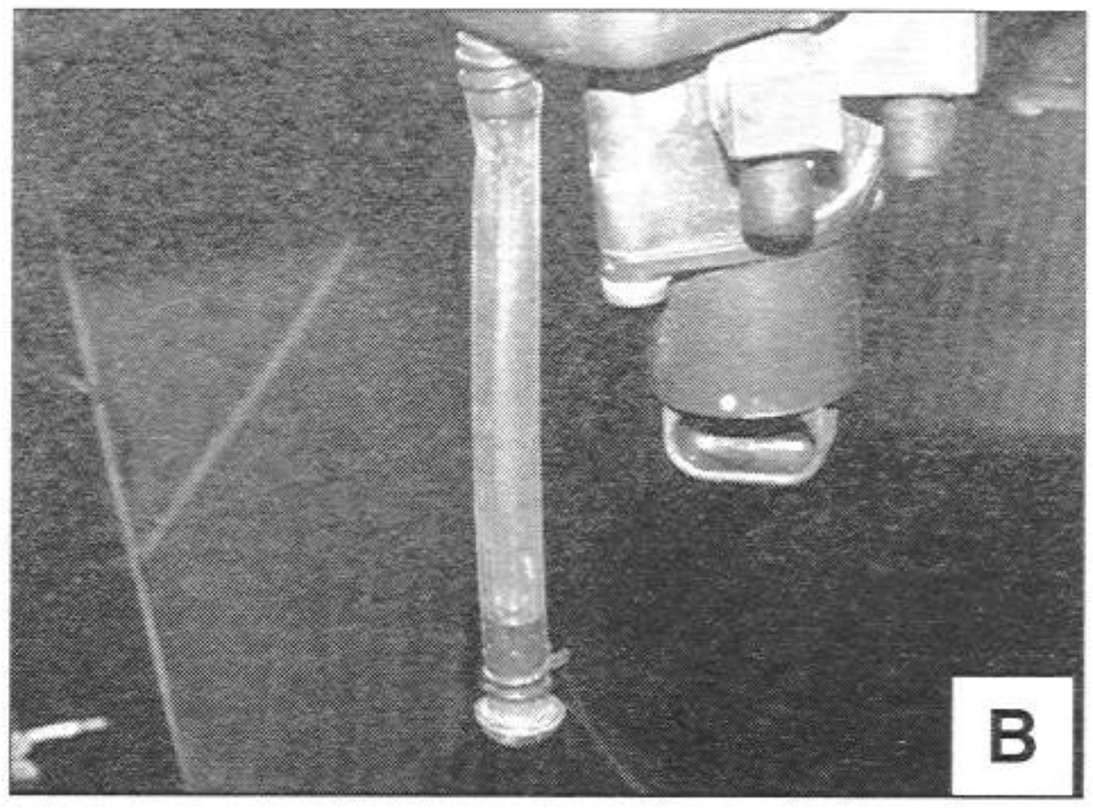

8.2.9 THROTTLE CONTROL CABLES

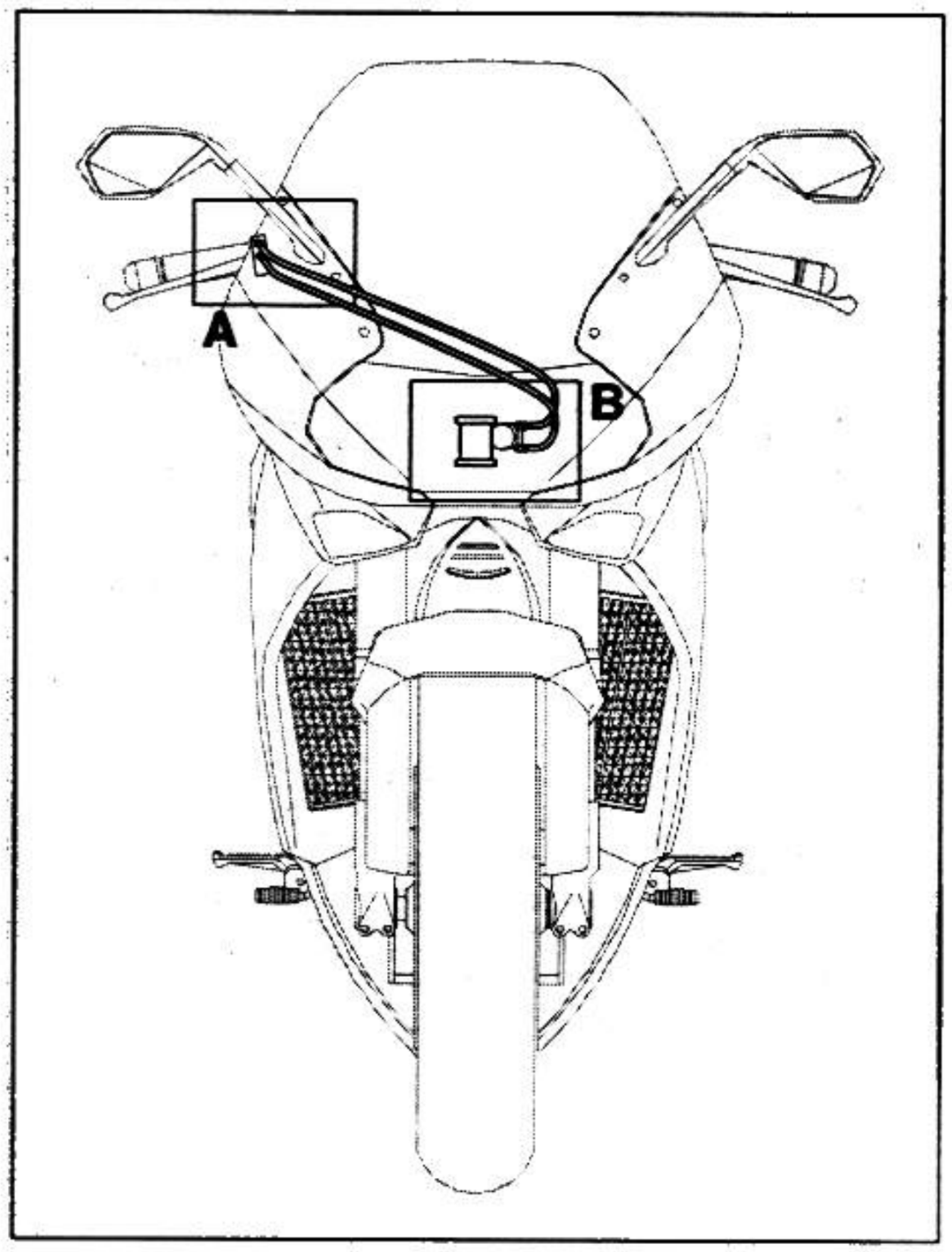

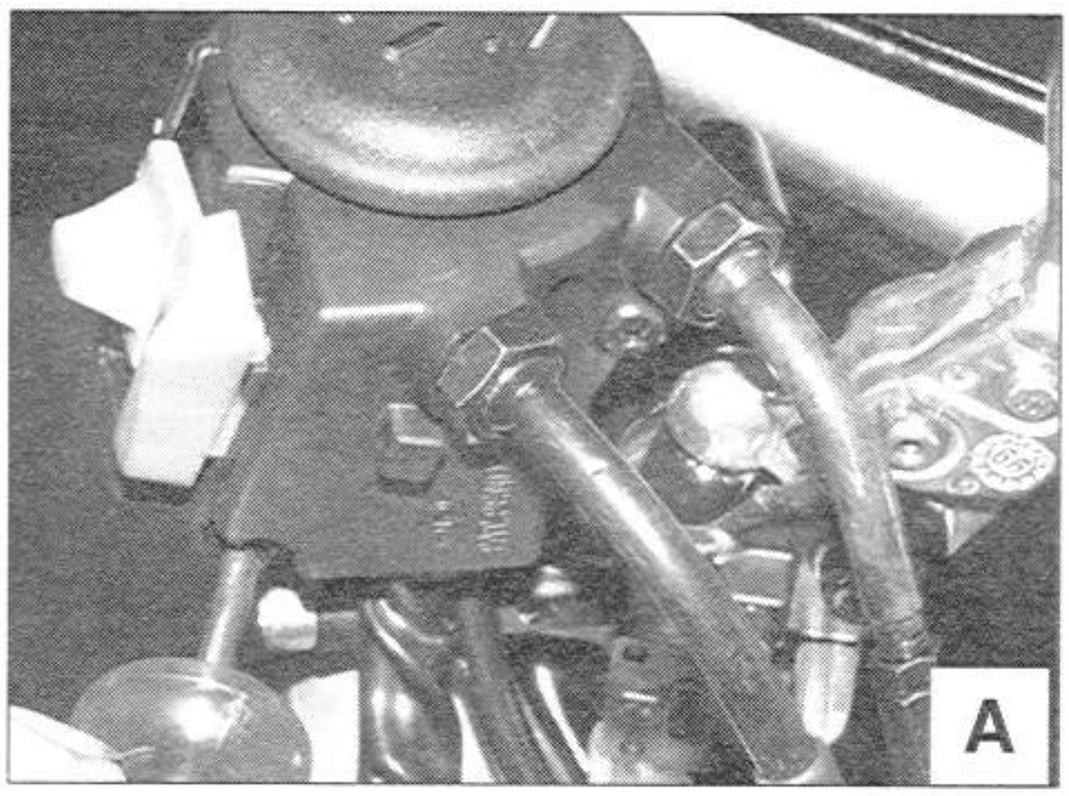

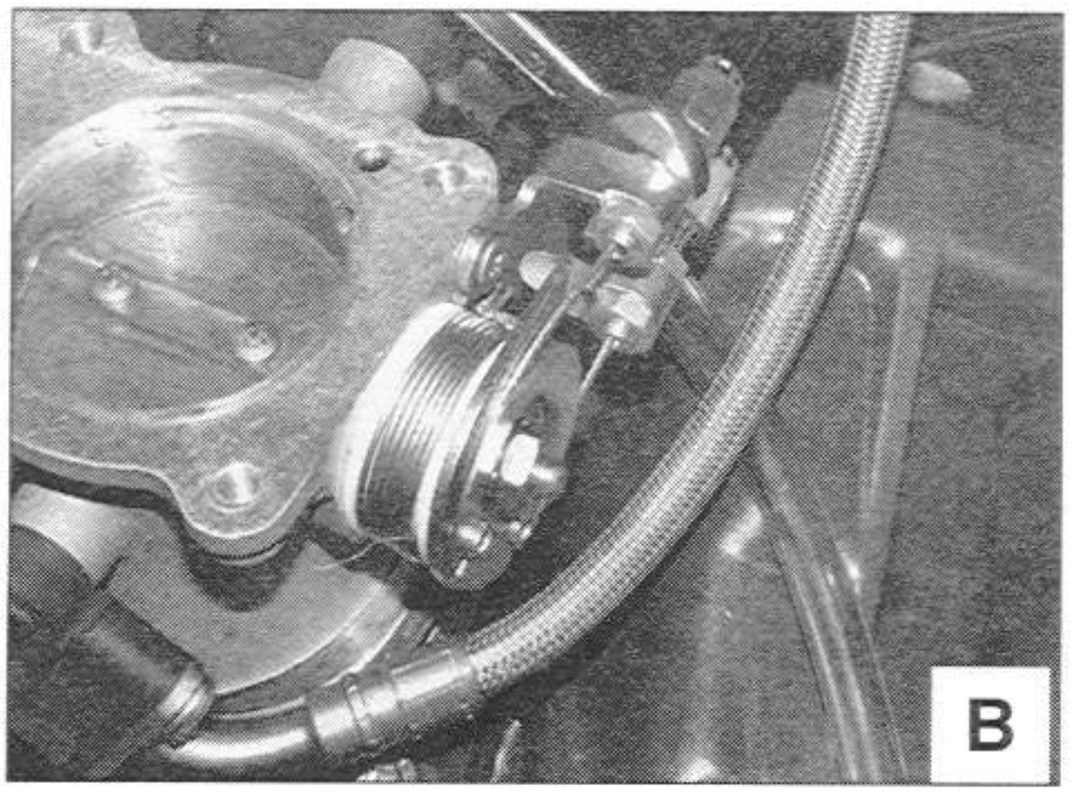

8.2.10 ELECTRICAL CABLES

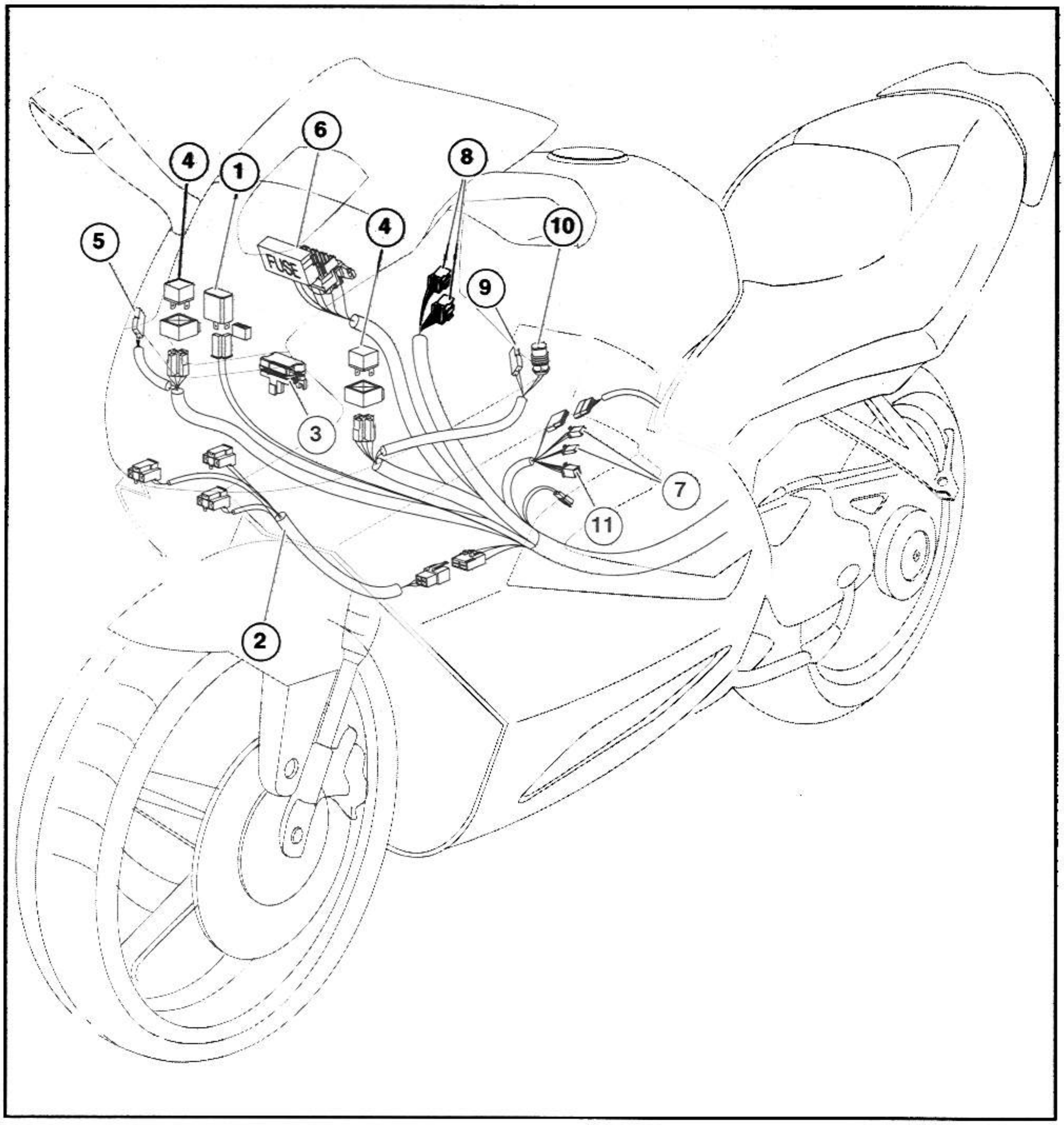

Legend

1) Flasher
2) Headlight wiring
3) Fall sensor
4) Light relay
5) Front right direction indicator
6) Secondary fuse box
7) Right dimmer switch connector
8) Dashboard connectors
9) Front left direction indicator connector
10) Air temperature sensor
11) Left dimmer switch connector

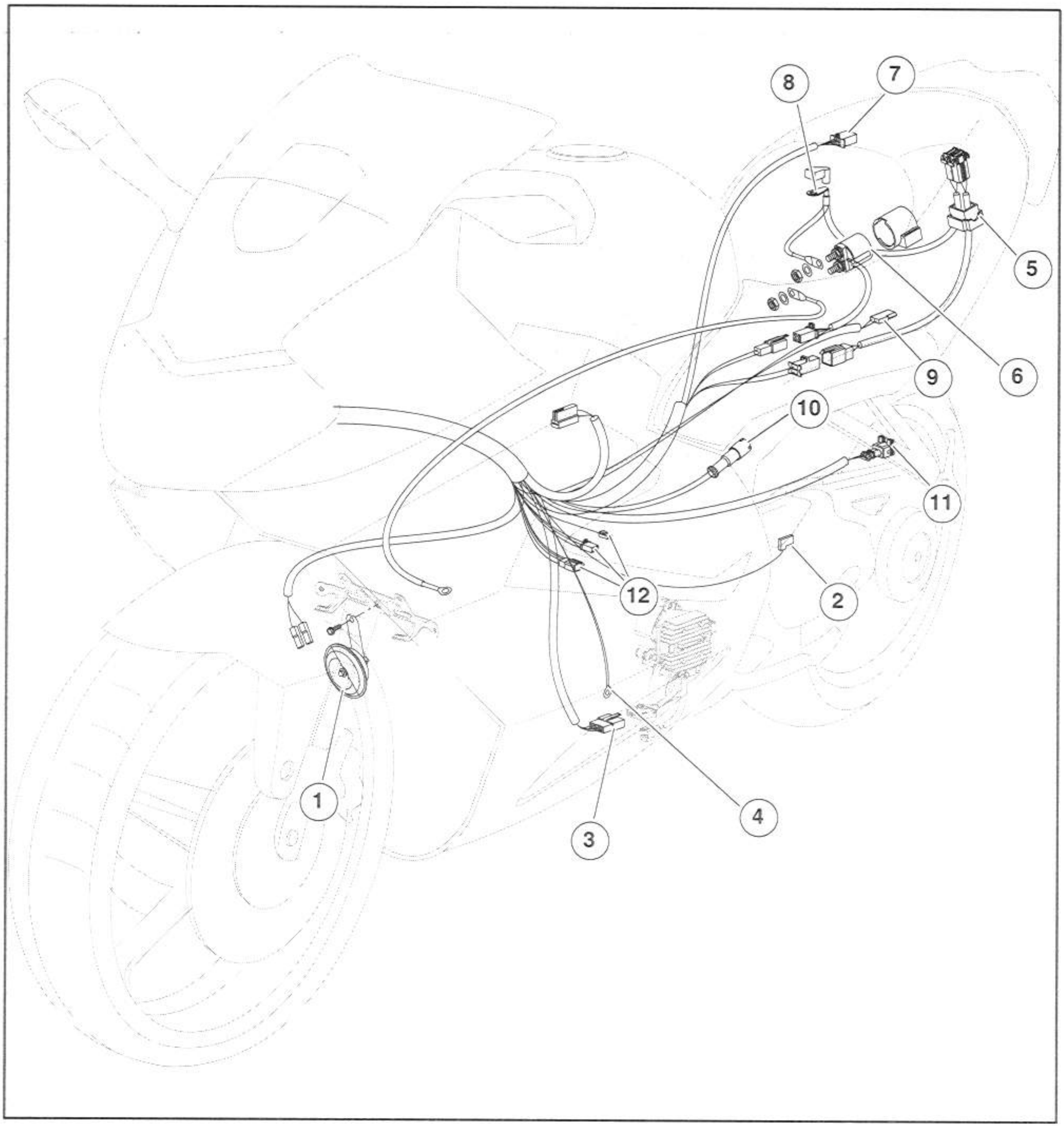

Legend

1) Horn
2) Oil pressure sensor
3) Voltage regulator
4) Engine earth
5) Main fuses
6) Start relay
7) Taillight
8) Positive battery pole
9) Rear brake light
10) Speed sensor connector
11) Coolant temperature sensor
12) Injection connectors

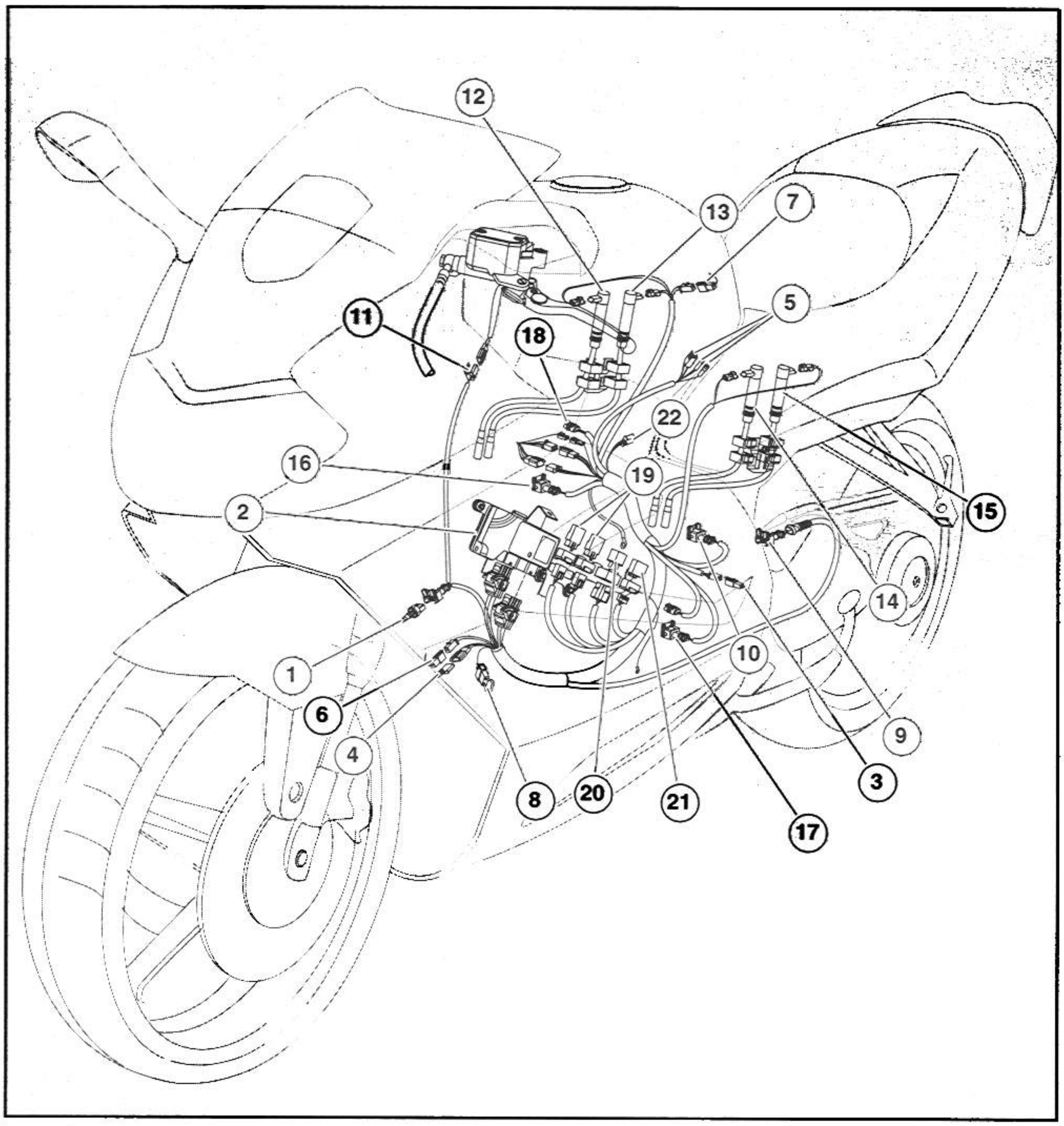

Legend

1) Air thermistor
2) Control unit
3) Fuel pump connector
4) Side stand switch
5) TEST connectors
6) Left fan connector
7) Right fan connector
8) Diode
9) Pick-up
10) Coolant thermistor
11) Clutch switch
12) Front cylinder coil "1"
13) Front cylinder coil "2"
14) Rear cylinder coil "1"
15) Rear cylinder coil "2"
16) Front cylinder injector
17) Rear cylinder injector
18) Throttle valve potentiometer
19) Relay
20) Injection relay
21) Diode module
22) Choke motor

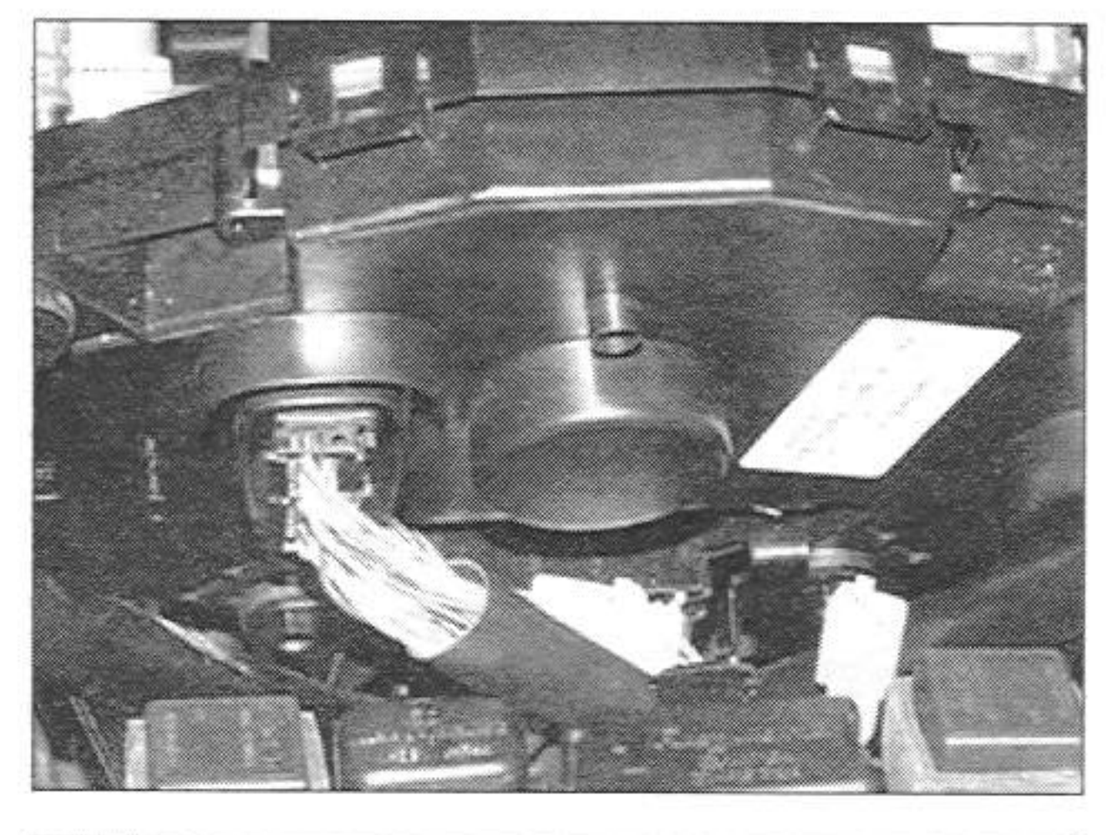

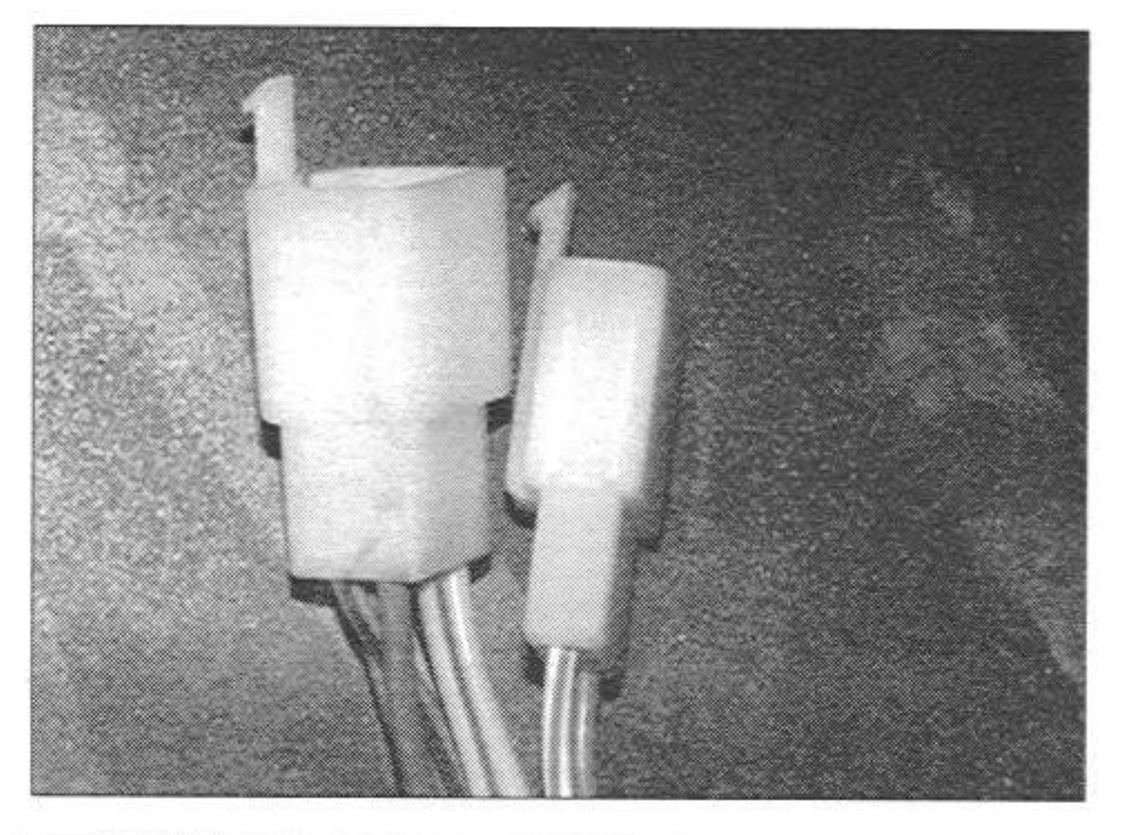

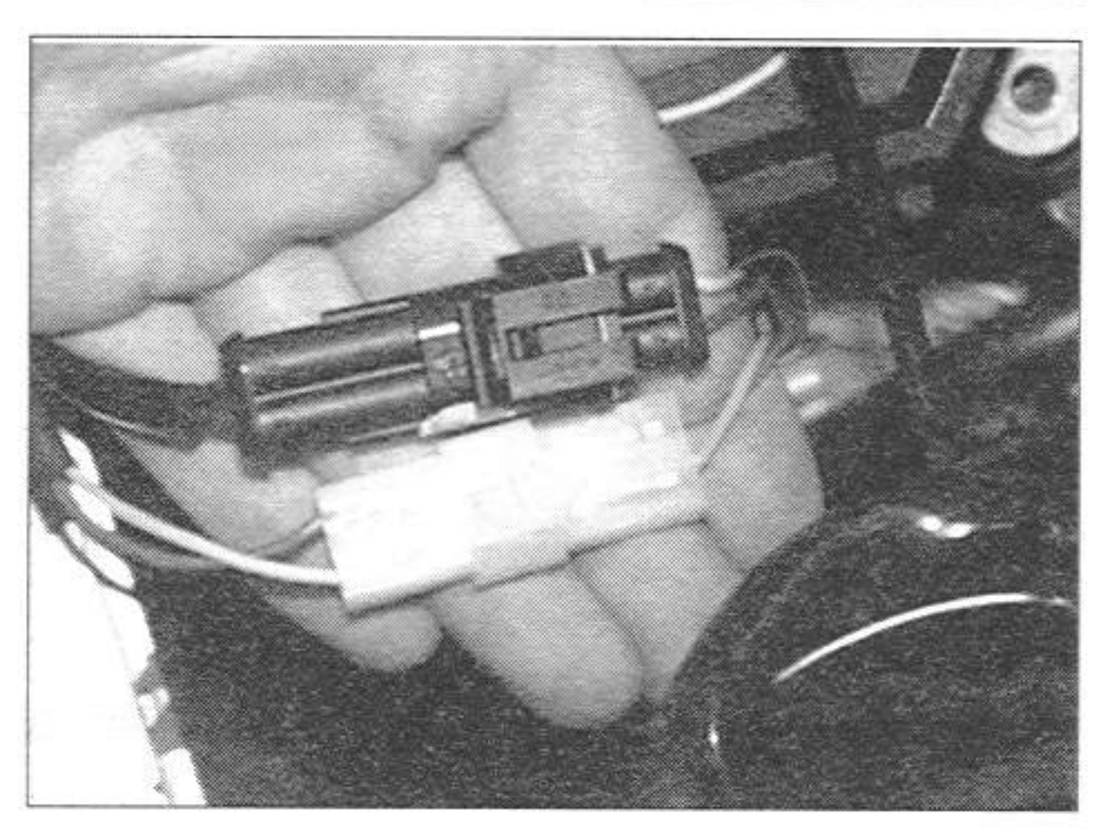

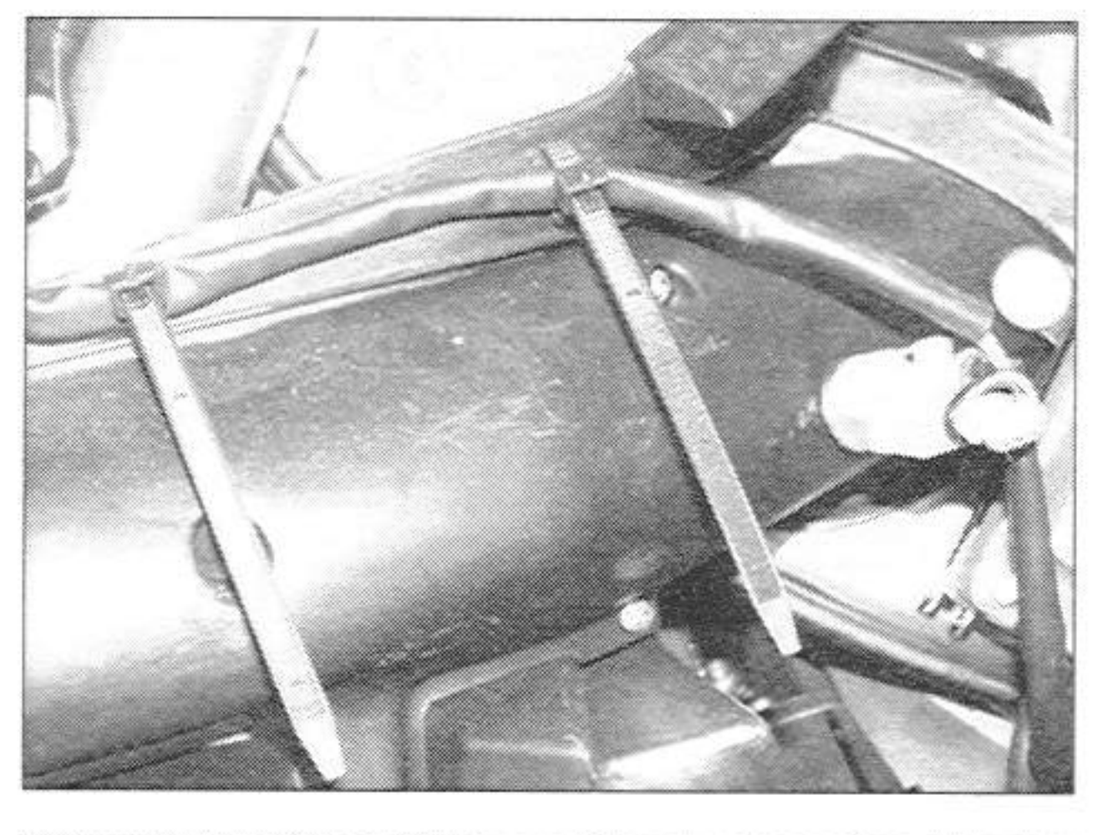

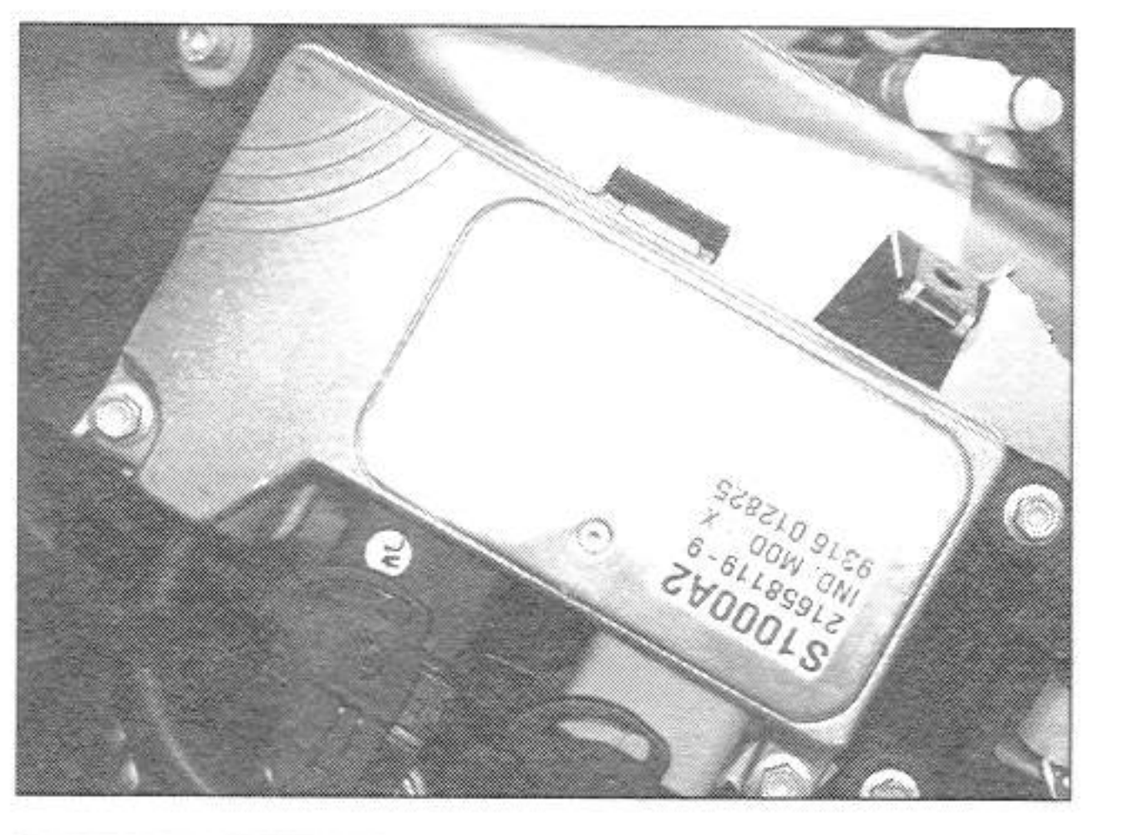
S1000A2
21658119-9
IND. M00 X
9316 012825

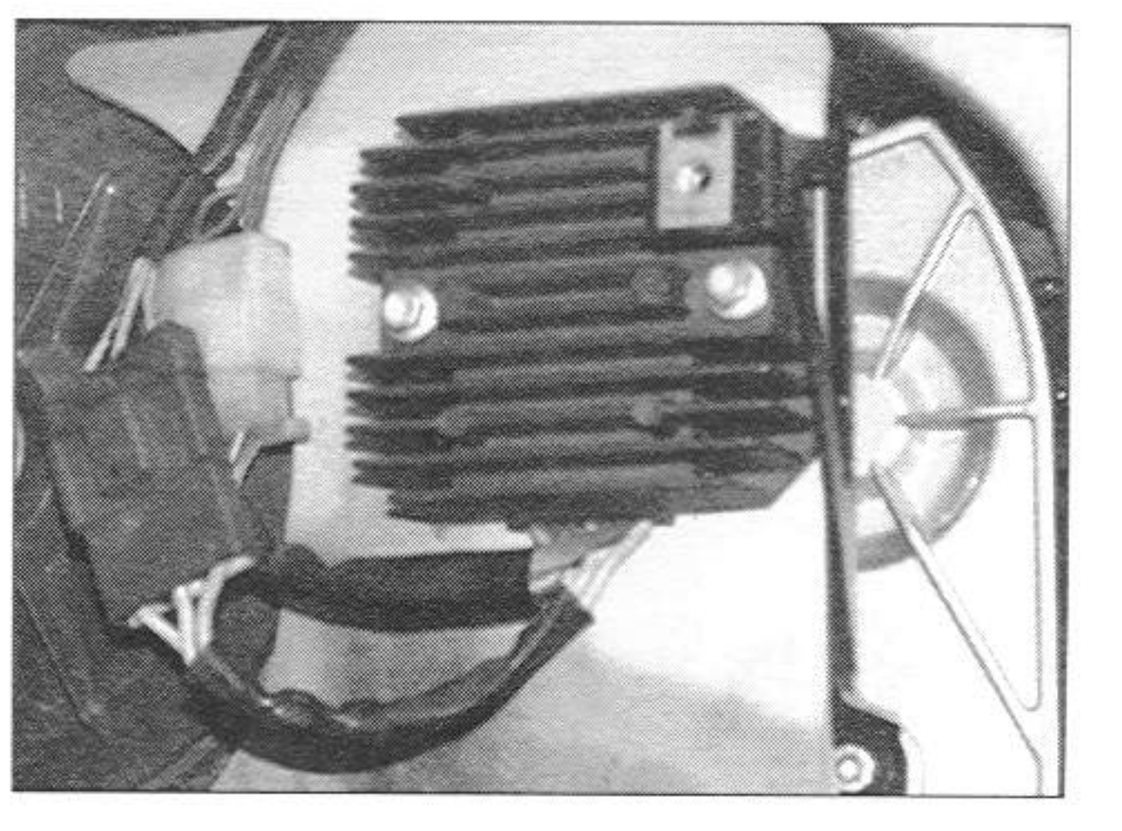

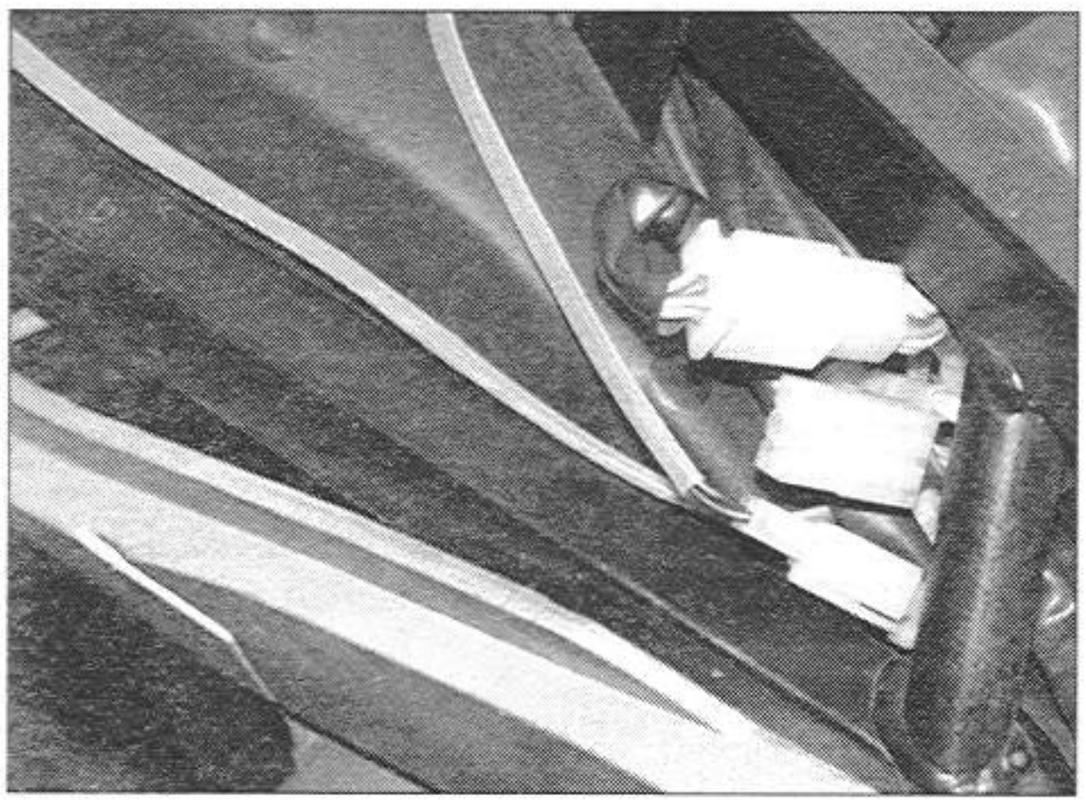

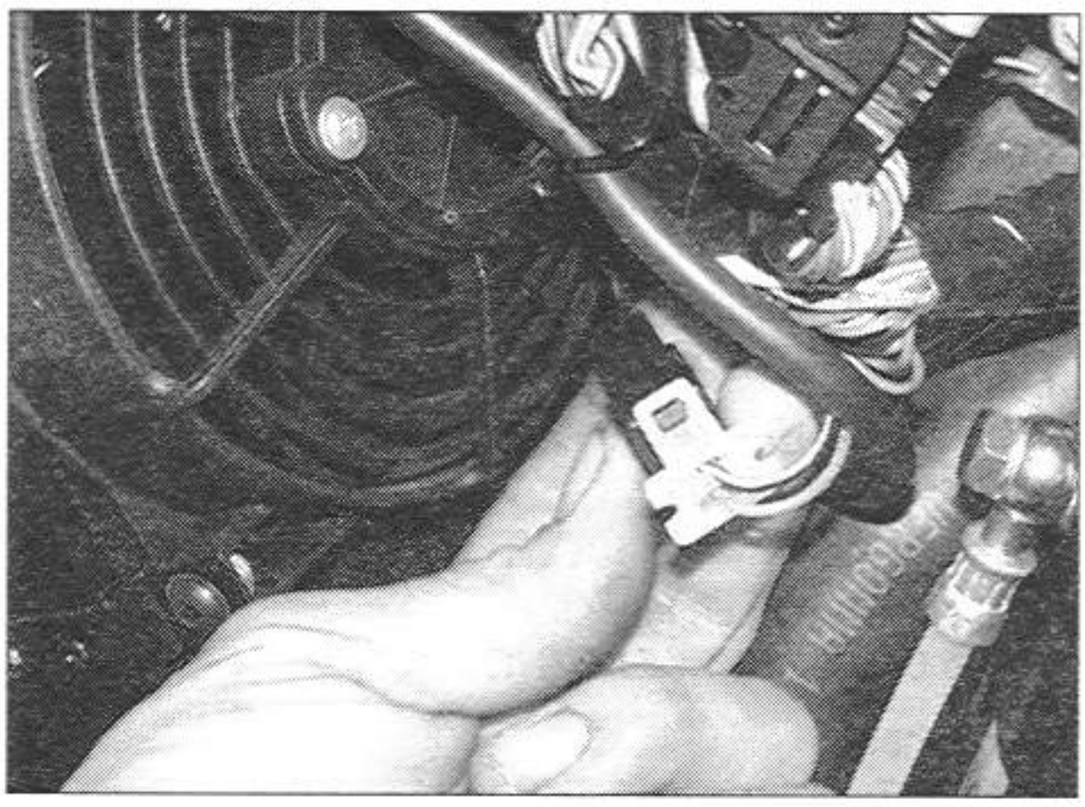

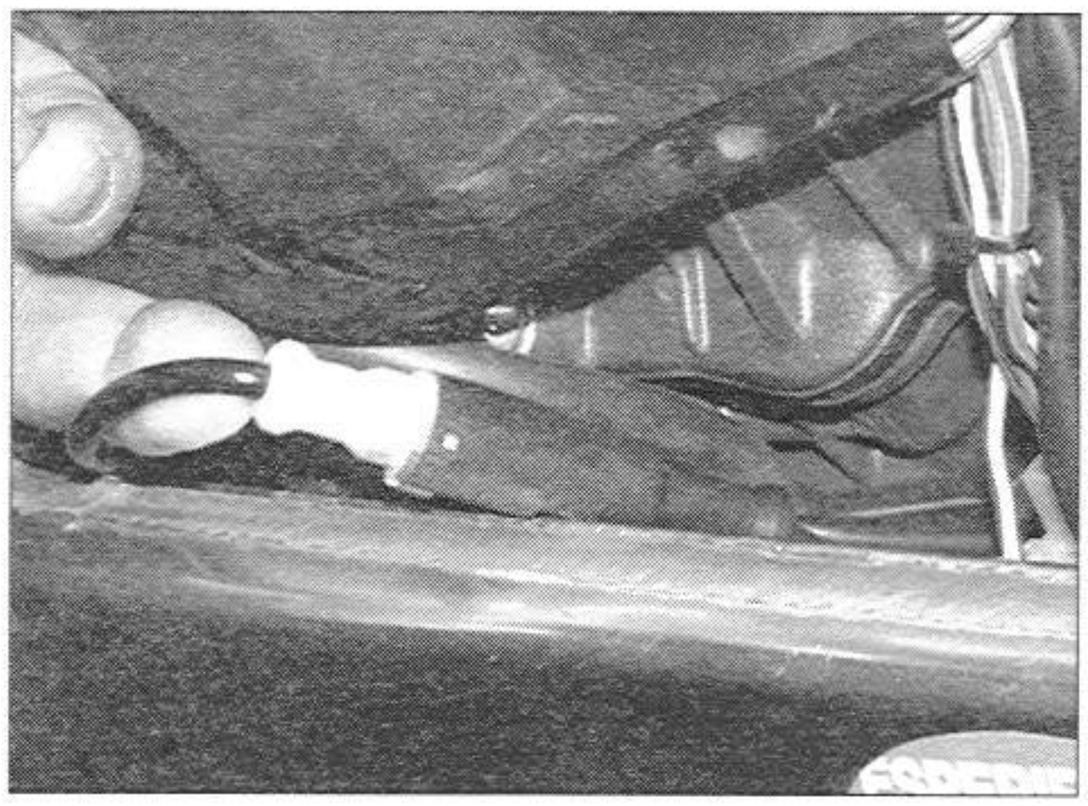

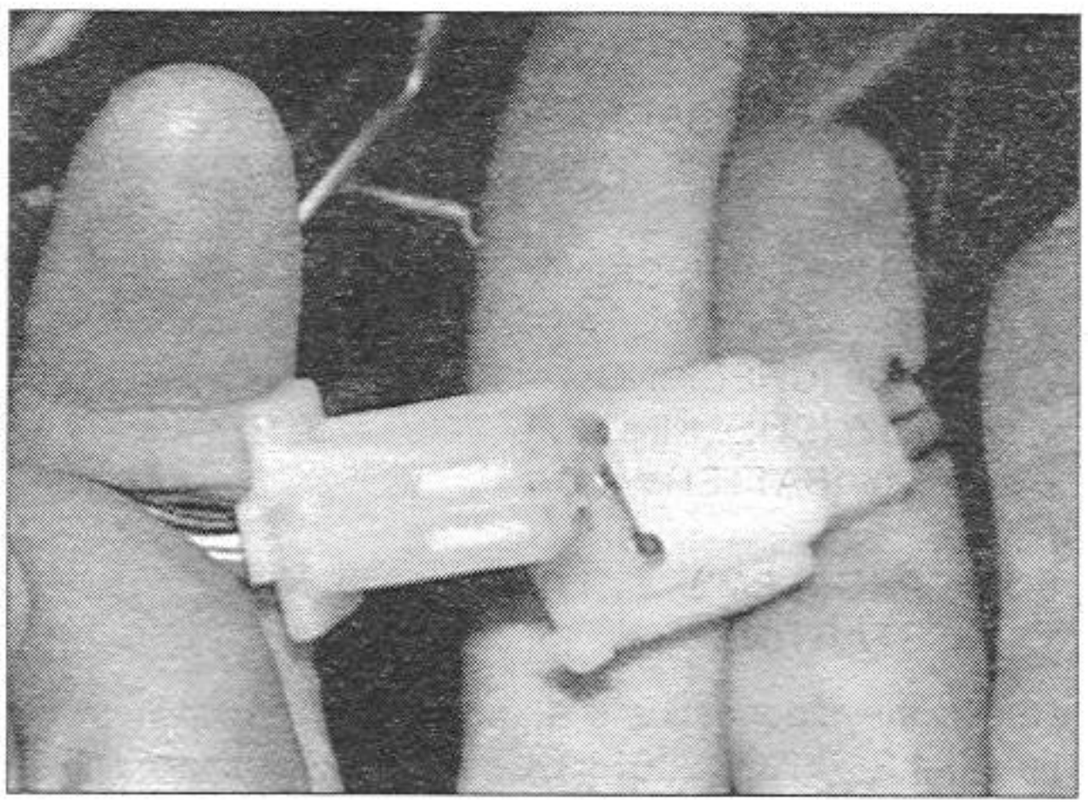

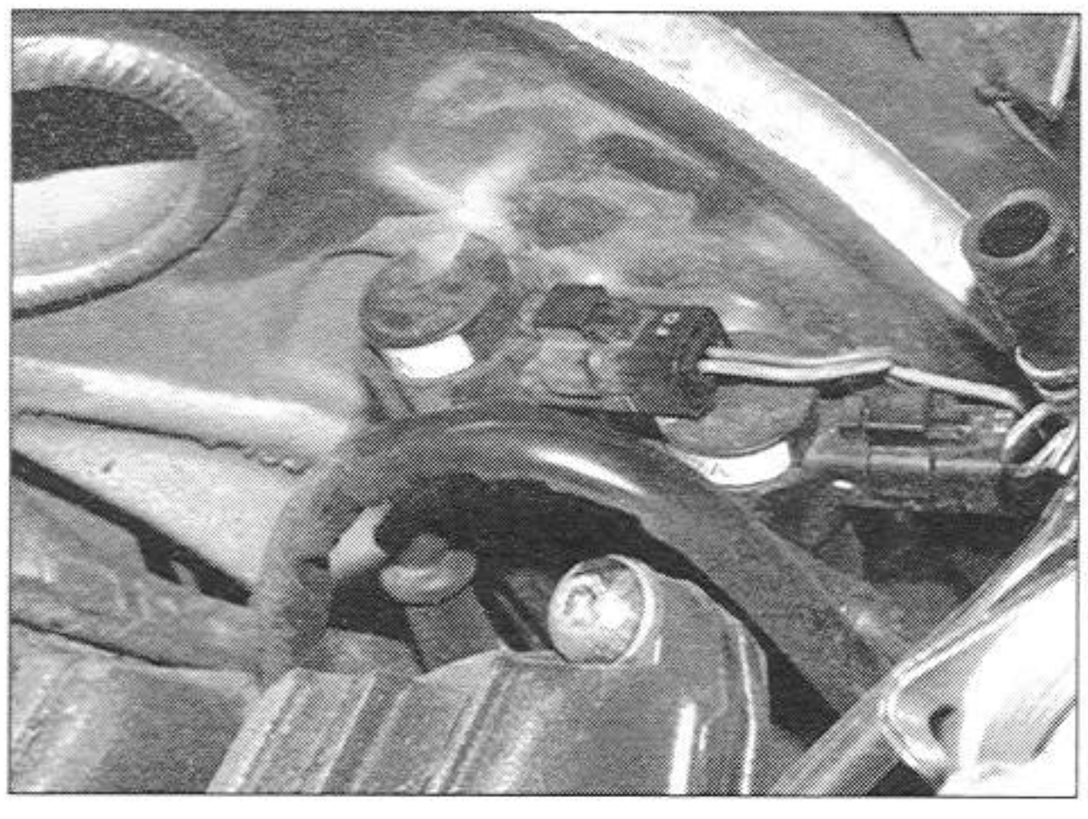

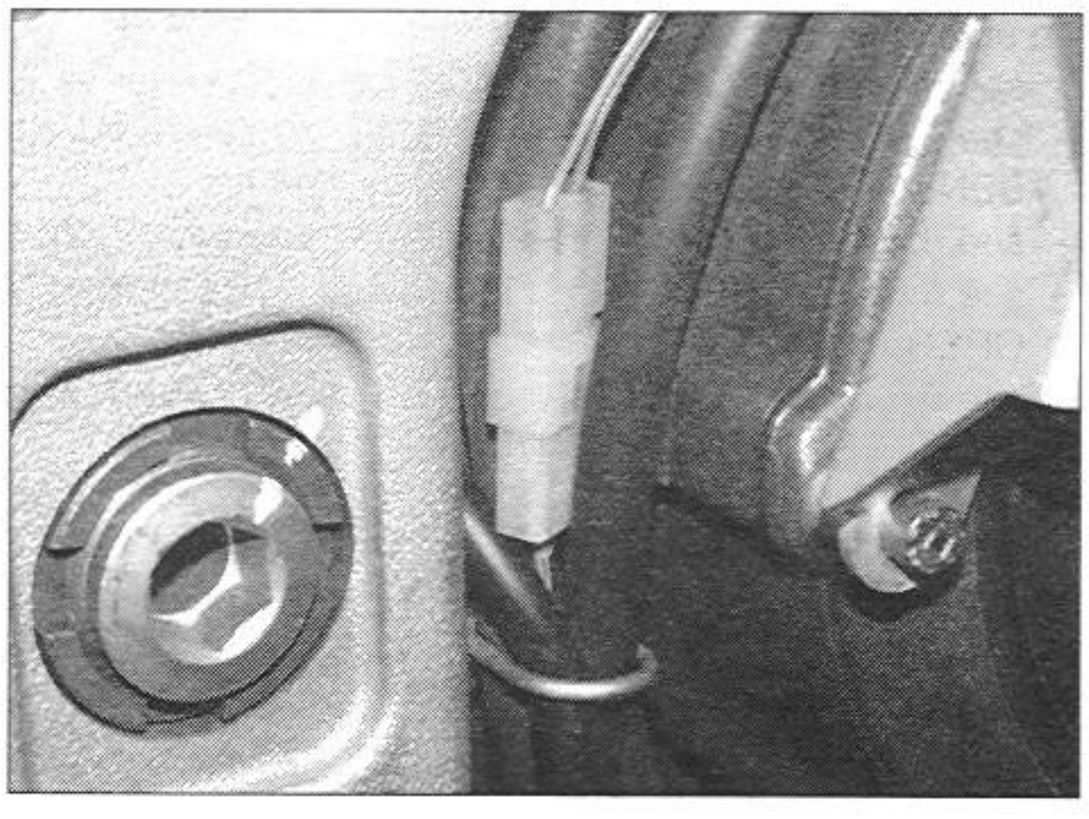

8.3 CHECKING THE ELECTRICAL SYSTEM

For the location of the various electrical components, see 6.1 (LOCATIONS OF ELECTRICAL COMPONENTS) and 8.2.10 (ELECTRICAL CABLES).

8.3.1 SPARK PLUGS (NO SPARK)

First check:
- Check the 15-A secondary fuses.
- Check spark plugs.

Second check:
- Check 30-A main fuses.
- See 6.6.6 (CHECKING THE IGNITION COILS).

Third check:
See 6.6.7 (CHECKING THE CRANKSHAFT POSITION SENSOR).

8.3.2 BATTERY RECHARGING PROBLEMS

- see 6.3.1 (CHECKING THE RECHARGING VOLTAGE).
- see 6.3.2 (CHECKING THE OPEN-CIRCUIT ALTERNATOR OPERATION).
- see 6.3.4 (CHECKING ALTERNATOR CONTINUITY).
- see 6.3.5 (CHECKING THE VOLTAGE REGULATOR).
- see 6.14 (BATTERY).

8.3.3 PROBLEMS WITH IGNITION AND/OR STARTING

Check the diagnostics system installed on the vehicle, [see 6.4.2 (TROUBLESHOOTING) (IF THE ENGINE DOES NOT START)].
In addition:
- see 6.6.6 (CHECKING THE IGNITION COILS).
- see 6.6.7 (CHECKING THE CRANKSHAFT POSITION SENSOR);
- see 6.4.4 (CHECKING THE OVERTURN SENSOR).
- see 6.6.4 (CHECKING THE AIR THERMISTOR OPERATION).
- see 6.6.5 (CHECKING THE COOLANT THERMISTORS OPERATION).
- see 6.6.3 (CHECKING THE THROTTLE VALVE POTENTIOMETER).
- see 6.6.1 (CHECKING THE INJECTORS).
- see 6.7.2 (CHECKING THE FUEL PUMP).
- see 6.7.3 (CHECKING THE FUEL PUMP RELAY).
- see 6.8.2 (STARTING SAFETY OPERATING LOGIC).
- see 6.8.3 (CHECKING THE START RELAY).
- see 6.8.5 (CHECKING THE SIDE STAND SWITCH).
- see 6.8.6 (CHECKING THE DIODE MODULE).
- see 6.8 (IGNITION SAFETY SYSTEM).
- see 6.14 (BATTERY).

8.3.4 PROBLEMS WITH AUXILIARY SYSTEMS

- see 6.11.2 (CHECKING THE LIGHT RELAY).
- see 6.8.4 (CHECKING THE DIODE).
- see 6.9.2 (CHECKING THE ELECTRIC FAN OPERATION).
- see 6.6.5 (CHECKING THE COOLANT THERMISTORS OPERATION).
- see 6.5.4 (TROUBLESHOOTING IN THE ELECTRONIC SYSTEM USING DISPLAYED INFORMATION).
- see 6.10.3 (ENGINE OIL PRESSURE SENSOR).
- see 6.10 (DASHBOARD INDICATORS).

8.4 CHECKING THE ELECTRICAL SYSTEM

8.4.1 ENGINE

For technical data and specifications on the components, see sect. 3 (ENGINE).

8.4.2 THROTTLE BODY COMPONENTS

For technical data and specifications on the components, see 4.8 (THROTTLE BODY).

8.4.3 FUEL SYSTEM

- Material of lines entering/leaving the delivery filter (Øi = 0.2 in - Øe = 0.5 in) = NBR-SF-NBR DIN 73379.
- Material of high-pressure delivery line = TEFLON with built-in metal plait and eyelet fittings at the ends.
- Material of low-pressure return line (Øi = 0.2 in Øe = 0.4 in) = NBR-SF-NEOPRENE DIN 73379.

8.4.4 ELECTRICAL SYSTEM

See 1.11 (SPECIFICATIONS) and see sect. 6 (ELECTRICAL SYSTEM).

8.4.5 FRONT BRAKE SYSTEM

- Disc material = steel.
- Disc thickness = 0.19 in (minimum 0.17 in).
- Disc diameter = 11.8 in.
- Number of clamp pins = 4 facing each other.
- Diameter of clamp pins = 1.1 in (lower) + 1.3 in (upper).
- Pad type = sintered.
- Pad friction material (standard) = TOSHIBA TT2802.
- Pad friction material (alternative) = FERIT/FERODO ID 450.
- Pad surface area = 3.67 in².
- Diameter rubber lines (standard) = Øe 0.3 in – Øi 0.12 in.
- Diameter of metal plait lines (alternative) = Øe 0.2 in - Øi 0.1 in.
- Pump diameter = 0.6 in.

8.4.6 REAR BRAKE SYSTEM

- Disc material = steel.
- Disc thickness = 0.19 in (minimum 0.17 in).
- Disc diameter = 10.0 in.
- Number of clamp pins = 2 facing each other.
- Diameter of clamp pins = 1.1 in.
- Pad friction material (standard) = FERIT/FERODO ID 450.
- Pad friction material (alternative) = TOSHIBA TTH38GF FERIT/FERODO ID 450/452/459.
- Pad surface area = 2.48 in².
- Diameter rubber lines (standard) = Øe 0.3 in – Øi 0.12 in.
- Diameter of metal plait lines (alternative) = Øe 0.2 in - Øi 0.1 in.
- Pump diameter = 0.4 in.

8.4.7 COOLING SYSTEM

See sect. 5 (COOLING SYSTEM)

- Working pressure 13.05 - 13.05 PSI (90 -120 kPa) (0.9 -1.2 bar).

8.4.8 WHEELS

Rims

See 1.11 (SPECIFICATIONS).

Rim eccentricity:

See 7.2.3 (CHECKING THE COMPONENTS).

Axle eccentricity:

See 7.2.3 (CHECKING THE COMPONENTS).

Tires:

See 1.11 (SPECIFICATIONS).

8.4.9 FRONT SUSPENSION

See 1.11 (SPECIFICATIONS), 2.29.1 (FRONT SUSPENSION) and 7.8 (FRONT FORK).

8.4.10 REAR SUSPENSION

See 1.11 (SPECIFICATIONS), 2.29.1 (FRONT SUSPENSION), 7.9 (SWINGING ARM) and 7.10 (REAR SUSPENSION).

8.4.11 STEERING

See 2.28.1 (CHECKING THE BEARING PLAY) and 7.7 (STEERING).

8.4.12 CAPACITY - FLUID PROPERTIES

See 1.11 (SPECIFICATIONS) and 1.12 (LUBRICANT CHART).

8.4.13 STRUCTURE (FRAME/SADDLE SUPPORT/ DASHBOARD MOUNT)

- Frame / Saddle support / Dashboard mount Material = light alloy
- Frame weight = 21.8 lb
- Torsion rigidity of frame = 4794.1 ftlb (6500 Nm/°).
- Steering angle = 26°
- Trail = 3.81 in.
- Saddle support weight = 2.3

Dashboard mount weight = 1.653 lb

NOTES

ANALYTICAL INDEX

i

A	Ref.	Page
ACTIVATING THE BATTERY	6.14.1	6-41
ADJUSTING		
REAR SHOCK ABSORBER	2.31.2	2-50
DRIVE CHAIN	2.35.3	2-55
CO	4.10.5	4-19
THROTTLE CONTROL	2.11.3	2-23
IDLE SPEED	2.11.2	2-22
FRONT FORK	2.29.2	2-48
BEARING PLAY	2.28.2	2-45
BRAKE LEVER CLEARANCE REAR	2.25	2-42
DASHBOARD LIGHT	2.3.3	2-8
GEARSHIFT LEVER	2.26	2-42
FRONT BRAKE LEVER AND CLUTCH LEVER	2.24	2-41
HORIZONTAL HEADLIGHT BEAM	6.18	6-49
VERTICAL HEADLIGHT BEAM	6.17	6-49
ADJUSTING THE SWINGING ARM REAR	2.30.1	2-49
AIR DUCT	7.1.30	7-27
	7.1.31	7-28
AIR FILTER	2.10	2-21
AIR FILTER CASE, REMOVING	7.1.8	7-11
AIR INLET DUCT CASES, REMOVING	7.1.34	7-30
AIR THERMISTOR, CHECKING OPERATION	6.6.4	6-18
ALTERNATOR		
CHECKING CONTINUITY	6.3.4	6-7
CHECKING OPERATIONOPEN-CIRCUIT	6.3.2	6-6
AUTOMATIC TESTING	4.7.5	4-13

B	Ref.	Page
BATTERY	2.4	2-13
	6.14	6-41
ACTIVATING	6.14.1	6-41
EXTENDED STORAGE	2.4.3	2-15
RECHARGING	2.4.2	2-15
REMOVING	7.1.9	7-12
BEARINGS		
CHECKING PLAY	2.28.1	2-44
ADJUSTING THE PLAY	2.28.2	2-45
BLEEDING		
BRAKE SYSTEMS	2.19	2-34
CLUTCH CONTROL SYSTEM	2.20	2-38
BRAKE DISC, REMOVING	7.6.4	7-72
BRAKE DISCS, REMOVING	7.5.3	7-67
BRAKES		
FRONT	7.5	7-65
FLUID	1.2.3	1-4
BREAKING THE CHAIN	7.11.2	7-101
BREAKING-IN RULES	1.3	1-6
BULBS		
HEADLIGHT, CHANGING	6.15.1	6-44
TAILLIGHT, CHANGING	6.15.3	6-46
FRONT DIRECTION INDICATORS, CHANGING	6.15.2	6-46
LICENSE PLATE LAMP, CHANGING	6.15.4	6-47
REPLACING	6.15	6-44

C	Ref.	Page
CABLES		
AUXILIARY, STARTING	2.6	2-16
THROTTLE CONTROL	8.2.9	8-18
ELECTRICAL	8.2.10	8-19
CAPACITY - FLUID PROPERTIES	8.4.12	8-26
CARBON MONOXIDE	1.2.6	1-6
CHAIN		
CHECKING THE WEAR	2.35.2	2-55
DRIVE	2.35	2-54
DRIVE, ADJUSTING	2.35.3	2-55
DRIVE, REMOVING	7.11	7-100
CHAIN BREAKER/RIVET TOOL	7.11.1	7-100
CHANGING		
FUSES	6.16	6-48
BULBS	6.15	6-44
HEADLIGHT BULBS	6.15.1	6-44
TAILLIGHT BULBS	6.15.3	6-46
DIRECTION INDICATOR BULBS FRONT	6.15.2	6-46
LICENSE PLATE LAMP BULBS	6.15.4	6-47
CLUTCH FLUID	2.23	2-41
FRONT BRAKE FLUID	2.21	2-39
REAR BRAKE FLUID	2.22	2-40
COOLANT	2.15	2-28
FORK OIL	7.8.1	7-78
ENGINE OIL AND ENGINE OIL FILTER	2.13	2-25
BRAKE PADS	7.5.1	7-66
BRAKE PADS	7.6.1	7-69
CHASSIS	7.1	7-4
CHECKING	6.14.3	6-43
FUEL INTAKE	4.1.2	4-4
REAR SUSPENSION LINKAGE	2.31.3	2-51
IGNITION COILS	6.6.6	6-20
COMPONENTS	7.2.3	7-54
	7.4.2	7-63
	7.7.2	7-75
	7.9.3	7-93
	7.10.4	7-99
ALTERNATOR CONTINUITY	6.3.4	6-7
THE COMPONENTS	7.8.4	7-84
THE DIODE MODULE	6.8.4	6-25
THE CLEARANCE	2.35.1	2-54
THE THROTTLE VALVE POTENTIOMETER	6.6.3	6-17
THE INJECTION RELAY	6.4.3	6-10
THE OVERTURN SENSOR	6.4.4	6-10
THE CRANKSHAFT POSITION SENSOR THE ENGINE	6.6.7	6-20
THE CHAIN WEAR, THE SPROCKET AND COUNTERSHAFT SPROCKET	2.35.2	2-55
THE BRAKE DISCS	7.5.2	7-67
THE BRAKE DISC	7.6.3	7-71
AND CLEANING TERMINALS	2.4.1	2-14
AND TOPPING UP CLUTCH FLUID	2.18.2	32-5
AND TOPPING UP FRONT BRAKE FLUID	2.16	2-29
AND TOPPING UP FRONT BRAKE FLUID	2.17	2-30
AND TOPPING UP COOLANT	2.14	2-27
OPEN-CIRCUIT OPERATION ALTERNATOR	6.3.2	6-6
ELECTRIC FAN OPERATION	6.9.2	6-28
AIR THERMISTOR OPERATION	6.6.4	6-18
THERMISTOR OPERATION COOLANT	6.6.5	6-19
BEARING PLAY	2.28.1	2-44

ELECTRICAL SYSTEM	8.3	8-25
	8.4	8-26
INJECTORS	6.6.1	6-16
STAND SWITCH	6.8.5	6-26
SAFETY SYSTEM SWITCHES	6.8.7	6-27
DIODE MODULE	6.8.6	6-26
FUEL PUMP	6.7.2	6-22
VOLTAGE REGULATOR	6.3.5	6-8
START RELAY	6.8.3	6-24
LIGHT RELAY	6.11.2	6-36
FUEL PUMP RELAY	6.7.3	6-22
RECHARGING SYSTEM	6.3	6-6
RECHARGING VOLTAGE	6.3.1	6-6
CHECKING ENGINE OIL LEVEL AND TOP UP	2.12	2-24
CHOKE MOTOR	6.6.2	6-16
CLEANING AND LUBRICATION	2.41.1	2-66
CLUTCH CYLINDER, REMOVING	3.2.1	3-6
CLUTCH CONTROL LINE	8.2.4	8-13
CO, ADJUSTING	4.10.5	4-19
COMPLETE SADDLE RELEASE, REMOVING	7.1.39	7-33.
COMPONENTS		
AT HIGH TEMPERATURES	1.2.7	1-6
THAT MAY BE DISASSEMBLED WITHOUT REMOVING THE ENGINE FROM THE FRAME	3.2	3-4
ELECTRICAL 2.5	2-15	
ELECTRICAL, LOCATIONS	6.1	6-3
THROTTLE BODY	8.4.2	8-26
CONNECTIONS TO THE CONTROL UNIT		
ELECTRONIC	6.6	6-14
CONNECTORS		
ELECTRONIC CONTROL UNIT	4.7.4	4-12
ELECTRICAL	6.2.2	6-5
CONSUMABLES, PRODUCTS	1.7	1-11
CONTROL		
THROTTLE, REMOVING	7.1.14	7-16
THROTTLE, CHECKING OPERATION	2.11.1	2-22
CLUTCH, FLUID	1.2.5	1-5
CLUTCH, REMOVING	7.1.12	7-15
CONTROLS		
ELECTRICAL ON THE HANDLEBAR RIGHT, REMOVING	7.1.16	7-18
ELECTRICAL ON THE HANDLEBAR LEFT, REMOVING	7.1.13	7-16
CONTROL UNIT		
ELECTRONIC, CONNECTIONS	6.6	6-14
ELECTRONIC, CONNECTORS	4.7.4	4-12
ELECTRONIC, REMOVING	7.1.10	7-13
COOLANT, FLUID	1.2.4	1-5
CYLINDERS, SYNCHRONIZING	4.10.4	4-18

D — Ref. Page

DASHBOARD,		
ADJUSTING THE LIGHTING	2.3.3	2-8
REMOVING	7.1.24	7-23
DASHBOARD INDICATORS	6.10	6-29
DESCRIPTION	5.1	5-3
DIAGRAM		
ELECTRICAL SYSTEMS INJECTION	6.4.1	6-9
WIRING - RST MILLE FUTURA	6.19	6-50
WIRING, LIGHT SYSTEM	6.11.1	6-35
WIRING, PUMP SYSTEM FUEL	6.7.1	6-21
WIRING, INDICATOR SYSTEM WARNING LIGHTS AND BUZZERS	6.13.1	6-39
WIRING, INDICATOR SYSTEM WARNING LIGHTS AND BUZZERS	6.12.1	6-37
WIRING, DASHBOARD INDICATORS	6.10.1	6-29
WIRING, SAFETY SYSTEM START-UP	6.8.1	6-23
RECHARGING SYSTEM	6.3.3	6-7
INJECTION SYSTEM	4.7.3	4-11
DIODE, CHECKING	6.8.4	6-25
DIODE MODULE, CHECKING	6.8.6	6-26
DISASSEMBLY		
SUSPENSION LINKAGE	7.10.3	7-98
DRIVE CHAIN	7.11	7-100
SWINGING ARM	7.9.2	7-92
THROTTLE BODY	4.9	4-16
WHEEL	7.2.2	7-53
LOWER/UPPER FORK TUBES	7.8.3	7-79
STEERING	7.7.1	7-75
DRAINING		
FUEL FROM THE TANK	4.2	4-5
FUEL FROM THE TANK	2.9	2-20

E — Ref. Page

ELECTRIC FANS		
CHECKING OPERATION	6.9.2	6-28
COOLING	6.9	6-28
COOLING, REMOVING	5.3	5-6
COOLING, DIAGRAM ELECTRICAL	6.9.1	6-28
ENGINE	8.4.1	8-26
INSTALLING ON THE FRAME	3.4	3-16
OIL	1.2.2	1-4
REMOVING FROM THE FRAME	3.3	3-7
ENGINE MANAGEMENT	4.7	4-8
ENGINE OIL RADIATOR, REMOVING	7.1.56	7-46
EXHAUST MANIFOLDS, REMOVING	7.1.53	7-43
EXHAUST MANIFOLD NUTS	2.34	2-53
EXHAUST SILENCER, REMOVING	7.1.50	7-41
EXPANSION TANK, REMOVING	5.8	5-9
EXTENDED BATTERY STORAGE	2.4.3	2-15

F — Ref. Page

FASTENERS	2.41	2-60
FAULT CODES, CHECKING	6.5.3	6-12
FAULT SITUATIONS	6.5.2	6-12
FILLER NECK	5.6	5-8
FILTER		
AIR	2.10	2-21
FUEL DELIVERY, REMOVING	4.5	4-6
ENGINE OIL, CHANGING	2.13	2-25
FOOTREST		
PASSENGER, REMOVING	7.1.44	7-37
RIDER, REMOVING	7.1.47	7-38

FORK
- FRONT 7.8 7-77
- FRONT, ADJUSTING 2.29.2 2-48
- REAR 7.9 7-91
- REAR, ADJUSTING 2.30.1 2-49
- RE-INSTALLING 7.9.4 7-94
- REMOVING 7.9.1 7-91
- DISASSEMBLING 7.9.2 7-92
- REAR 2.30 2-49

FRAME, REMOVING 7.1.60 7-49

FRONT FAIRING, REMOVING 7.1.20 7-21

FRONT MUDGUARD, REMOVING 7.1.26 7-25

FUEL 1.2.1 1-3
- WARNINGS 1.2 1-3
- DRAINING THE TANK 2.9 2-20

FUEL LEVEL,
- REMOVING THE SENSOR 4.4 4-6

FUEL TANK CAP,
- REMOVING 7.1.7 7-10

FUSES, REPLACING 6.16 6-48

G — Ref. Page

GENERAL INFORMATION 4.7.1 4-8

GENERAL OPERATING INFORMATION
- FOR MAINTENANCE AND REPAIRS 3.1.9 3-3

GROUP
- THROTTLE 4.8 4-14
- THROTTLE, INSPECTING 4.10 4-17
- THROTTLE, REMOVING 4.8.1 4-14
- THROTTLE, DISASSEMBLING 4.9 4-16
- FINAL DRIVE 7.4 7-60
- FINAL DRIVE, REMOVING 7.4.1 7-61

H — Ref. Page

HANDLEBAR
- RIGHT, REMOVING 7.1.19 7-20
- LEFT, REMOVING 7.1.18 7-20

HEADLIGHT BEAM
- ADJUSTING HORIZONTALLY 6.18 6-49
- ADJUSTING VERTICALLY 6.17 6-49

HIGH TEMPERATURE, COMPONENTS 1.2.7 1-6

HORN, REMOVING 7.1.27 7-25

I — Ref. Page

IGNITION AND/OR STARTING,PROBLEMS 8.3.3 8-25

IGNITION COILS, CHECKING 6.6.6 6-20

IGNITION SWITCH/STEERING LOCK,
- REMOVING 7.1.17 7-19

INDICATORS DIRECTION 7.1.29 7-26
- TABLE 2.3.8 2-10

INJECTION, SYSTEM DIAGRAM 4.7.3 4-11

INJECTORS,
- CHECKING 6.6.1 6-16
- REMOVING 4.8.2 4-15

INSPECTION
- THROTTLE BODY 4.10 4-17
- DRIVE CHAIN SHOE 2.35.5 2-56
- CHAIN GUIDE PLATE 2.35.4 2-56
- FRONT SUSPENSION 2.29 2-47
- REAR SUSPENSION 2.31 2-50

INSTALLATION
- COMPLETE ENGINE ON THE FRAME 3.4 3-16
- LOWER/UPPER FORK TUBES 7.8.6 7-90

INSTRUCTIONS FOR APPLYING
- TRANSFERS 1.10 1-19

INSTRUMENTS, TABLE 2.3.8 2-10

INTRODUCTION 6.2 6-5

K — Ref. Page

KNOB ON THE HANDLEBAR
- LEFT, REMOVING 7.1.11 7-13

L — Ref. Page

LEGEND 2.3.1 2-8

LEVER
- GEARSHIFT, ADJUSTING 2.26 2-42
- GEARBOX CONTROL, REMOVING 7.1.48 7-39
- FRONT BRAKE CONTROL,ADJUSTING 2.24 2-41
- REAR BRAKE CONTROL, ADJUSTING THE CLEARANCE 2.25 2-42
- REAR BRAKE CONTROLREMOVING 7.1.49 7-40
- CLUTCH CONTROL, ADJUSTING 2.24 2-41

LICENSE PLATE HOLDER, REMOVING 7.1.42 7-36

LIFTING THE FUEL TANK 2.8 2-19

LIGHT
- HEADLIGHT, REMOVING 7.1.22 7-22
- TAILLIGHT, REMOVING 7.1.36 7-31

LIGHTS, SETTINGS
- DASHBOARD 2.3.3 2-8

LINES
- FUEL 2.37 2-58
- BRAKE AND CLUTCH CONTROL 2.38 2-58
- COOLING SYSTEM 2.39 2-58

LINKAGE
- REAR SUSPENSION,REMOVING 7.10.2 7-97
- SUSPENSION, DISASSEMBLING 7.10.3 7-98

LOWER FAIRING, REMOVING 7.1.33 7-29

LUBRICANTS 3.1.5 3-3
- WARNINGS 1.2 1-3
- TABLES 1.6 1-10

LUBRICATION POINTS 2.2 2-7

M — Ref. Page

MAINTENANCE 4.1.1 4-4
6.14.2 6-43

PERIODIC, SCHEDULE 2.1 2-4
- SCHEDULED, DIAGRAM 2.1.1 2-5

MAINTENANCE INTERVALS 3.1.2 3-3

MIRRORS, REMOVING 7.1.21 7-22

MISCELLANEOUS TOOLS 1.8.1 1-15

MULTIFUNCTION COMPUTER 2.3 2-8

O	Ref.	Page
OIL		
FORK, CHANGING	7.8.1	7-78
ENGINE	1.2.2	1-4
ENGINE AND TOPPING UP, LEVEL	2.12	2-24
ENGINE, CHANGING	2.13	2-25
OTHER COMPONENTS, WARNINGS	1.2	1-3

P	Ref.	Page
PADS		
BRAKES, CHANGING	7.5.1	7-66
BRAKES, CHECKING WEAR	2.27	2-43
BRAKE, CHANGING	7.6.1	7-69
PANEL		
LOWER	7.1.32	7-28
LOWER SADDLE, REMOVING	7.1.40	7-33
PATH, FASTENING, WIRING, CABLES AND LINES	8.2	8-11
PLATE		
CHAIN GUIDE	2.35.4	2-56
UNDER THE SADDLE, REMOVING	7.1.41	7-34
POSITION OF SERIAL NUMBERS	1.1	1-3
POSITIONING		
ELECTRICAL COMPONENTS	6.1	6-3
THE VEHICLE ON THE SUPPORT STAND	1.9	1-17
THE VEHICLE ON THE FRONT SUPPORT STAND	1.9.1	1-17
THE VEHICLE ON THE CENTRAL SUPPORT STAND	1.9.2	1-18
MASTER LINK	7.11.3	7-102
POTENTIOMETER		
THROTTLE VALVE, CHECKING	6.6.3	6-17
THROTTLE VALVE	4.10.3	4-17
PRECAUTIONS TO OBSERVE WHEN CARRYING OUT MAINTENANCE OPERATIONS AND REPAIRS	3.1.8	3-3
PROBLEMS		
IGNITION AND/OR STARTING	8.3.3	8-25
BATTERY RECHARGING	8.3.2	8-25
AUXILIARY SYSTEMS	8.3.4	8-25
PROCEDURES		
MAINTENANCE AND REPAIR, GENERAL INFORMATION	3.1.9	3-3
MAINTENANCE AND REPAIR, PRECAUTIONS TO OBSERVE	3.1.8	3-3
PRODUCTS		
CONSUMABLES	1.7	1-11
PROPERTIES	1.7.1	1-11
USE	1.7.2	1-12
PROGRAMMING KEYS	2.3.	2 2-8
PROGRAMMING, KEYS	2.3.2	2-8
PROPERTIES	1.5	1-7
CONSUMABLES	1.7.1	1-11
PUMP		
FUEL INTAKE, REMOVING	4.6	4-7
FUEL INTAKE, REMOVING THE COMPLETE UNIT	4.3	4-5
FUEL, CHECKING	6.7.2	6-22
BRAKES, REMOVING	7.5.4	7-67
BRAKE, REMOVING	7.6.5	7-73

R	Ref.	Page
RADIATORS, REMOVING	5.2	5-5
RADIATOR SPOILER, REMOVING	7.1.35	7-30
REAR BRAKE	7.6	7-68
REAR BRAKE CALIPER, REMOVING	7.6.2	7-70
REAR HOUSING, REMOVING	7.1.59	7-48
REAR GRAB HANDLE, REMOVING	7.1.37	7-32
REASSEMBLY		
REAR WHEEL, WHEEL REAR, REASSEMBLY	7.3.2	7-58
UPPER/LOWER FORK TUBE UNIT	7.8.5	7-85
STEERING	7.7.3	7-76
RECHARGING		
BATTERY	2.4.2	2-15
BATTERY, PROBLEMS	8.3.2	8-25
RECHARGING VOLTAGE, CHECKING	6.3.1	6-6
RE-INSTALLING		
SWINGING ARM	7.9.4	7-94
WHEEL	7.2.4	7-55
RELAY		
STARTER, CHECKING	6.8.3	6-24
INJECTION, CHECKING	6.4.3	6-10
LIGHTS, CHECKING	6.11.2	6-36
FUEL PUMP, CHECKING	6.7.3	6-22
REMOVING		
SHOCK ABSORBER	7.10.1	7-96
BATTERY	7.1.9	7-12
REAR SUSPENSION LINKAGE	7.10.2	7-97
FILLER NECK	5.6	5-8
LOWER FAIRING	7.1.33	7-29
SIDE FAIRINGS	7.1.28	7-26
UPPER CHAIN HOUSING	7.1.58	7-48
AIR FILTER CASE	7.1.8	7-11
SIDE STAND	7.1.54	7-44
ELECTRONIC CONTROL UNIT	7.1.10	7-13
LOWER FRONT PANEL	7.1.32	7-28
LOWER SADDLE PANEL	7.1.40	7-33
CLUTCH CYLINDER	3.2.1	3-6
HORN	7.1.27	7-25
THREE-WAY MANIFOLD	5.7	5-9
EXHAUST MANIFOLDS	7.1.53	7-43
ELECTRICAL CONTROLS ON THE RIGHT HANDLEBAR	7.1.16	7-18
ELECTRICAL CONTROLS ON THE LEFT HANDLEBAR	7.1.13	7-16
THROTTLE CONTROL	7.1.14	7-16
FRONT BRAKE CONTROL	7.1.15	7-17
FRONT BRAKE CONTROL, REMOVING	7.1.15	7-17
CLUTCH CONTROL	7.1.12	7-15
COMPLETE GEARSHIFT LEVER	7.1.48	7-39
COMPLETE FUEL TANK	7.1.6	7-9
COMPLETE SADDLE RELEASE	7.1.39	7-33
RIGHT AIR DUCT	7.1.31	7-28
LEFT AIR DUCT	7.1.30	7-27
SPROCKET	7.4.4	7-64
REMOVING		
DASHBOARD	7.1.24	7-23
FRONT FAIRING	7.1.20	7-21
BRAKE DISCS	7.5.3	7-67
BRAKE DISC	7.6.4	7-72
ECCENTRIC CAM	7.4.3	7-64
ELECTRIC FANS COOLING	5.3	5-6
HEADLIGHT	7.1.22	7-22

TAILLIGHT	7.1.36	7-31
FRONT SIDE PANELS	7.1.3	7-7
REAR SIDE PANELS	7.1.2	7-6
FUEL DELIVERY FILTER	4.5	4-6
SWINGING ARM	7.9.1	7-91
COMPLETE PUMP ASSEMBLY		
FUEL INTAKE	4.3	4-5
THROTTLE BODY	4.8.1	4-14
FINAL DRIVE ASSEMBLY	7.4.1	7-61
FRONT DIRECTION INDICATORS	7.1.29	7-26
INJECTORS	4.8.2	4-15
IGNITION SWITCH/STEERING LOCK	7.1.17	7-19
REAR BRAKE LEVER	7.1.49	7-40
REAR GRAB HANDLE	7.1.37	7-32
KNOB ON THE HANDLEBAR LEFT	7.1.11	7-13
COMPLETE ENGINE FROM THE FRAME	3.3	3-7
UPPER DASHBOARD MOLDING	7.1.23	7-23
FRONT MUDGUARD	7.1.26	7-25
PARTIAL FUEL TANK	7.1.5	7-8
DRIVE CHAIN SHOE	7.1.57	7-47
SADDLE SUPPORT LOWER		
MOLDED COVER	7.1.41	7-34
REAR BRAKE CALIPER	7.6.2	7-70
PASSENGER FOOTREST	7.1.44	7-37
RIDER FOOTREST	7.1.47	7-38
FUEL PUMP	4.6	4-7
BRAKE MASTER CYLINDER	7.5.4	7-67
BRAKE MASTER CYLINDER	7.6.5	7-73
LICENSE PLATE HOLDER	7.1.42	7-36
ENGINE OIL RADIATOR	7.1.56	7-46
RADIATORS	5.2	5-5
COMPLETE WHEEL	7.2.1	7-52
	7.3.1	7-57
AIR INLET DUCT CASES	7.1.34	7-30
SADDLE	7.1.1	7-6
RIGHT HANDLEBAR	7.1.19	7-20
LEFT HANDLEBAR	7.1.18	7-20
FUEL LEVEL SENSOR	4.4	4-6
ENGINE OIL TANK	7.1.55	7-45
SADDLE LOCK	7.1.38	7-32
EXHAUST SILENCER	7.1.50	7-41
MIRRORS	7.1.21	7-22
RADIATOR SPOILER	7.1.35	7-30
LOWER/UPPER FORK TUBES	7.8.2	7-78
BAG RACKS	7.1.4	7-7
PASSENGER FOOTREST SUPPORTS	7.1.43	7-36
DASHBOARD/FRONT FAIRING MOUNT	7.1.25	7-24
RIDER FOOTREST SUPPORT RIGHT	7.1.46	7-38
RIDER FOOTREST SUPPORT LEFT	7.1.45	7-37
FUEL TANK CAP	7.1.7	7-10
REAR HOUSING	7.1.59	7-48
FRAME	7.1.60	7-49
COOLANT THERMISTORS	5.4	5-7
EXHAUST PIPES	7.1.51	7-42
THERMOSTAT	5.5	5-8
EXPANSION TANK	5.8	5-9
RETURN UNDER WARRANTY	6.14.4	6-43
RIVETING THE PINS	7.11.4	7-103
RST MILLE FUTURA, WIRING DIAGRAM	6.19	6-50

S	Ref.	Page
SADDLE, REMOVING	7.1.1	7-6
SADDLE LOCK, REMOVING	7.1.38	7-32
SAFETY OPERATING LOGIC		
STARTING	6.8.2	6-24
SCHEDULED MAINTENANCE CHART	2.1.1	2-5
SCHEDULED MAINTENANCE PLAN	2.1	2-4
SEALANTS	3.1.4	3-3
SENSOR		
FALL, CHECKING	6.4.4	6-10
FUEL LEVEL	6.10.5	6-33
CRANKSHAFT POSITION,		
CHECKING	6.6.7	6-20
ENGINE OIL PRESSURE	6.10.3	6-31
AIR TEMPERATURE	6.10.2	6-30
COOLANT TEMPERATURE	6.10.6	6-34
SPEED	6.10.4	6-32
SENSOR ALIGNMENT		
THROTTLE VALVE POSITION	4.10.6	4-21
SENSORS	4.7.2	4-9
SERIAL NUMBERS, POSITIONS	1.1	1-3
SETTING THE CLOCK (HOURS AND MINUTES)	2.3.7	2-10
SHOCK ABSORBER	2.31.2	2-50
REMOVING	7.10.1	7-96
SHOE		
DRIVE CHAIN, INSPECTION	2.35.5	2-56
DRIVE CHAIN, REMOVING	7.1.57	7-47
SIDE FAIRINGS, REMOVING	7.1.28	7-26
SIDE PANELS		
FRONT, REMOVING	7.1.3	7-7
REAR, REMOVING	7.1.2	7-6
SIDE STAND		
FRONT SUPPORT,		
PLACING THE VEHICLE	1.9.1	1-17
SUPPORT,		
PLACING THE VEHICLE	1.9	1-17
CENTRAL SUPPORT,		
PLACING THE VEHICLE	1.9.2	1-18
SIDE, REMOVING	7.1.54	7-44
SIDE STAND SWITCH,		
CHECKING	6.8.5	6-26
SPARE PARTS	1.4	1-7
SPARK PLUGS	2.7	2-17
NO SPARK	8.3.1	8-25
SPECIAL TOOLS	1.8	1-15
SPECIFICATIONS, GENERAL		
TIGHTENING TORQUES	1.11	1-21
SPROCKET AND COUNTERSHAFT		
SPROCKET, CHECKING WEAR	2.35.2	2-55
SPROCKET, REMOVING	7.4.4	7-64
STARTING		
WITH JUMPER CABLES	2.6	2-16
SAFETY SYSTEM	6.8.6	23-27
STEERING	2.28	2-44
	8.4.11	8-26
	7.7	7-74
REASSEMBLING	7.7.3	7-76
DISASSEMBLING	7.7.1	7-75
STRUCTURE (FRAME/SADDLE SUPPORT/		
DASHBOARD MOUNT)	8.4.13	
SUPPLY SYSTEMS		
FUEL, CHECKING	4.1.2	4-4
ELECTRICAL, INJECTION DIAGRAM	6.4.1	6-9
SUPPORT OR MOUNT		
DASHBOARD/FRONT FAIRING,		
REMOVING	7.1.25	

RIGHT RIDER FOOTREST, REMOVING 7.1.46 7-38
LEFT RIDER FOOTREST, REMOVING 7.1.45 7-37

SUPPORTS AND RACKS
BAG RACKS, REMOVING 7.1.4 7-7
PASSENGER FOOTREST, REMOVING 7.1.43 7-36

SUSPENSION
FRONT 2.29.1 2-47
8.4.9 8-26
FRONT, INSPECTING 2.29 2-47
REAR 8.4.10 8-26
REAR 7.10 7-96
REAR, CHECK LINKAGE 2.31.3 2-51
REAR, INSPECTING 2.31 2-50

SWITCHES 6.13.2 6-40
SAFETY SYSTEM, CHECKING 6.8.7 6-27

SWITCHING
ODOMETER (MILEAGE COUNTER) TOTAL/PARTIAL 2.3.4 2-9
INDICATOR LEVEL SWITCHING FUEL / AIR TEMPERATURE 2.3.6 2-9
SWITCHING KM/MI, L/GAL, °C/°F 2.3.5 2-9

SYNCHRONIZING THE CYLINDERS 4.10.4 4-18

SYSTEM
INJECTION 6.4 6-9
IGNITION/INJECTION 6.5 6-11

SYSTEM
RECHARGING, CHECKING 6.3 6-6
IGNITION SAFETY 6.8 6-23

SYSTEM
CLUTCH CONTROL, BLEEDING 2.20 2-38
FUEL INTAKE 8.4.3 8-26
COOLING 8.4.7 8-26
RECHARGING, DIAGRAM 6.3.3 6-7
ELECTRICAL 8.4.4 8-26
FRONT BRAKING 8.4.5 8-26
REAR BRAKING 8.4.6 8-26
LIGHTS 6.11 6-35
FUEL PUMP 6.7 6-21
WARNING LIGHTS AND BUZZERS 6.13 6-39
WARNING LIGHTS AND BUZZERS 6.12 6-37

SYSTEMS
AUXILIARY, PROBLEMS 8.3.4 8-25
BRAKING, BLEEDING 2.19 2-34

T — Ref. Page

TABLE
LUBRICANTS 1.6 1-10
INSTRUMENTS AND INDICATORS 2.3.8 2-10

TANK
FUEL 4.1 4-3
FUEL, REMOVING COMPLETELY 7.1.6 7-9
FUEL, PARTIALLY REMOVING 7.1.5 7-8
FUEL, LIFTING 2.8 2-19
ENGINE OIL, REMOVING 7.1.55 7-45
DRAINING FUEL 4.2 4-5

TECHNICAL SPECIFICATIONS 3.1.1 3-3

TERMINALS AND CLAMPS, CHECKING AND CLEANING 2.4.1 2-14

TESTING
HORN 6.12.2 6-38
FAULT CODES 6.5.3 6-12
THROTTLE CONTROL OPERATION 2.11.1 2-22
FLASHER 6.12.3 6-38
BRAKE PAD WEAR 2.27 2-43

THERMISTORS
COOLANT, CHECKING OPERATION 6.6.5 6-19
COOLANT, REMOVING 5.4 5-7

THREE-WAY MANIFOLD, REMOVING 5.7 5-9

THROTTLE 2.11 2-22
ADJUSTING THE CONTROL 2.11.3 2-23

THROTTLE BODY 4.10.2 4-17

THROTTLE VALVES, ALIGNMENT SENSOR 4.10.6 4-21

TIGHTENING NUTS AND BOLTS 2.40 2-59

TIGHTENING TORQUES 3.1.7 3-3
GENERAL SPECIFICATIONS 1.11 1-21

TIRES 2.36 2-57

TOOLS
SPECIAL 1.8 1-15
3.1.6 3-3
MISCELLANEOUS 1.8.1 1-15

TRANSFERS, INSTRUCTIONS FOR APPLYING 1.10 1-19

TROUBLESHOOTING 6.4.2 6-9

TROUBLESHOOTING
FAULTS 3.1.3 3-3
6.4.2 6-9
6.5.1 6-12
8.1 8-3
FAULTS, BATTERY 8.1.3 8-8
FAULTS, CHASSIS 8.1.5 8-9
FAULTS, BRAKES 8.1.4 8-9
FAULTS, ELECTRICAL SYSTEM 8.1.2 8-8
FAULTS, ENGINE 8.1.1 8-3

TROUBLESHOOTING IN THE ELECTRONIC SYSTEM USING DISPLAYED INFORMATION 4.7.6 4-13

TUBES, PIPES, AND HOSES
BREATHER AND OVERFLOW DRAINAGE 8.2.8 8-17
FRONT BRAKES 8.2.1 8-11
REAR BRAKE 8.2.2 8-11
FUEL SYSTEM 8.2.3 8-12
COOLING SYSTEM 8.2.6 8-14
ENGINE OIL 8.2.7 8-16
PPC DEVICE PRESSURE 8.2.5 8-13
EXHAUST, REMOVING 7.1.51 7-42

U — Ref. Page

UPPER CHAIN HOUSING, REMOVING 7.1.58 7-48

UPPER DASHBOARD MOLDING 7.1.23 7-23

UPPER FORK TUBE/ LOWER FORK TUBE UNITS, INSTALLATION 7.8.6 7-90
UPPER/LOWER FORK TUBES, REMOVING 7.8.2 7-78
UPPER/LOWER FORK TUBES, DISASSEMBLING 7.8.3 7-79

UPPER/LOWER FORK TUBE UNIT, REASSEMBLING 7.8.5 7-85

USING CONSUMABLES 1.7.2 1-12

V	Ref.	Page
VALVE	5.5	5-8
VOLTAGE REGULATOR, CHECKING	6.3.5	6-8

W	Ref.	Page
WARNINGS FOR FUEL, LUBRICANTS, COOLANT AND OTHER COMPONENTS	1.2	1-3
WHEEL		
FRONT	2.32	2-52
FRONT	7.2	7-51
COMPLETE, REMOVING	7.2.1	7-52
	7.3.1	7-57
REAR	2.33	2-52
REAR	7.3	7-56
DISASSEMBLING	7.2.2	7-53
WHEELS	8.4.8	8-26
WIRE COLORS	6.2.1	6-5

NOTES

NOTES

aprilia s.p.a.
via G.Galilei, 1
30033 Noale (VE) Italy
tel. +39 041.5829111
fax +39 041.441054

www.serviceaprilia.com